Willow Run Test Labs, LLC
7117 Fieldcrest Dr.
Brighton, Michigan 48116 USA
Tel: (734) 252-9785
Fax: (734) 926-9785
e-mail: info@wrtest.com

Testing of

Electromagnetic Emissions

per

USA: CFR Title 47, Part 15.249 (Emissions)
Canada: ISED RSS-310 (Verification) (Emissions)

are herein reported for

Autoliv ASP Inc.
NB24G175V1

Test Report No.: 20161230-RPTWAC010037Ar1

Copyright © 2016

Applicant/Provider:
Autoliv ASP Inc.
1001 Pawtucket Blvd, Lowell Massachusetts 01854 USA
Phone: +1 (734) 484-1387, Fax: +1 (734) 484-1389
Contact Person: c/o Brad Koski (WAC); brad@w-app.com

Data Recorded by: Dr. Joseph Brunett, EMC-002790-NE

Reviewed by: Dr. Joseph Brunett, EMC-002790-NE

Prepared by: Dr. Joseph Brunett, EMC-002790-NE

Date of Issue: December 30, 2016

Results of testing completed on (or before) December 18, 2016 are as follows.

Emissions: The transmitter intentional emissions **COMPLY** with the regulatory limit(s) by no less than 11.5 dB. Transmit chain spurious or harmonic emissions **COMPLY** by no less than 0.4 dB.

Revision History

Rev. No.	Date	Details	Revised By
r0	December 30, 2016	Initial Release.	J. Brunett
r1	January 4, 2017	Updated.	J. Brunett
r3	January 9, 2017	Added duty cycle note.	J. Brunett

Contents

Revision History **2**

Table of Contents **2**

1 Test Report Scope and Limitations **4**
1.1 Laboratory Authorization . . . 4
1.2 Report Retention . . . 4
1.3 Subcontracted Testing . . . 4
1.4 Limitation of Results . . . 4
1.5 Copyright . . . 4
1.6 Endorsements . . . 4
1.7 Test Location . . . 5
1.8 Traceability and Equipment Used . . . 5

2 Test Specifications and Procedures **6**
2.1 Test Specification and General Procedures . . . 6

3 Configuration and Identification of the Equipment Under Test **7**
3.1 Description and Declarations . . . 7
3.1.1 EUT Configuration . . . 7
3.1.2 Modes of Operation . . . 7
3.1.3 Variants . . . 8
3.1.4 Test Samples . . . 8
3.1.5 Functional Exerciser . . . 8
3.1.6 Modifications Made . . . 8
3.1.7 Production Intent . . . 8
3.1.8 Declared Exemptions and Additional Product Notes . . . 8

4 Emissions **9**
4.1 General Test Procedures . . . 9
4.1.1 Radiated Test Setup and Procedures . . . 9
4.1.2 Conducted Emissions Test Setup and Procedures . . . 12
4.1.3 Power Supply Variation . . . 12
4.1.4 Thermal Variation . . . 12
4.2 Intentional Emissions . . . 13
4.2.1 Fundamental Emission Pulsed Operation . . . 13
4.2.2 Fundamental Emission Bandwidth . . . 16
4.2.3 Fundamental Emission . . . 17
4.3 Unintentional Emissions . . . 18
4.3.1 Transmit Chain Spurious Emissions . . . 18

5 Measurement Uncertainty **19**

List of Tables

1 Test Site List. 5
2 Equipment List. 5
3 EUT Declarations. 7
4 Pulsed Emission Characteristics (Duty Cycle). 13
5 Intentional Emission Bandwidth. 16
6 Fundamental Radiated Emissions. 17
7 Transmit Chain Spurious Emissions. 18
8 Measurement Uncertainty. 19

List of Figures

1 Photos of EUT. 7
2 EUT Test Configuration Diagram. 8
3 Radiated Emissions Diagram of the EUT. 9
4 Radiated Emissions Test Setup Photograph(s). 11
5 Pulsed Emission Characteristics (Duty Cycle). 14
5 Pulsed Emission Characteristics (Duty Cycle). 15
5 Pulsed Emission Characteristics (Duty Cycle). 15
6 Intentional Emission Bandwidth. 16

1 Test Report Scope and Limitations

1.1 Laboratory Authorization

Test Facility description and attenuation characteristics are on file with the FCC Laboratory, Columbia, Maryland (FCC Reg. No: 688478) and with ISED Canada, Ottawa, ON (File Ref. No: IC8719A-1 and IC22227-1).

1.2 Report Retention

For equipment verified to comply with the regulations herein, the manufacturer is obliged to retain this report with the product records for the life of the product, and no less than ten years. A copy of this Report will remain on file with this laboratory until December 2026.

1.3 Subcontracted Testing

This report does not contain data produced under subcontract.

1.4 Limitation of Results

The test results contained in this report relate only to the item(s) tested. Any electrical or mechanical modification made to the test item subsequent to the test date shall invalidate the data presented in this report. Any electrical or mechanical modification made to the test item subsequent to this test date shall require reevaluation.

1.5 Copyright

This report shall not be reproduced, except in full, without the written approval of Willow Run Test Labs, LLC.

1.6 Endorsements

This report shall not be used to claim product endorsement by any accrediting, regulatory, or governmental agency.

1.7 Test Location

The EUT was fully tested by **Willow Run Test Labs, LLC**, 7117 Fieldcrest Dr., Brighton, Michigan 48116 USA. Table 1 lists all site(s) employed herein. Specific test sites utilized are also listed in the test results sections of this report.

Table 1: Test Site List.

Description	Location	Quality Num.
OATS (3 meter)	8501 Beck Rd. Bldg 2227, Belleville MI 48111	OATSA
OATS (3 meter)	7117 Fieldcrest Dr., Brighton, MI 48116	OATSB

1.8 Traceability and Equipment Used

Pertinent test equipment used for measurements at this facility is listed in Table 2. The quality system employed at Willow Run Test Labs, LLC has been established to ensure all equipment has a clearly identifiable classification, calibration expiry date, and that all calibrations are traceable to the SI through NIST, other recognized national laboratories, accepted fundamental or natural physical constants, ratio type of calibration, or by comparison to consensus standards.

Table 2: Equipment List.

Description	Manufacturer/Model	SN	Quality Num.	Last Cal By / Date Due
Spectrum Analyzer	Rhode-Schwarz / FSV30	101660	RSFSV30001	RS / May-2018
Amplifier (5–1500 MHz)	Miteq / AM-44-000515	278450	AMP001	WRTL / May-2017
Signal Gen.	HP / 8340B	2730A0064	HPSG2	WRTL / On-Use
Biconical	EMCO / 93110B	9802-3039	BICEMCO01	Lib. Labs / Aug-2017
Log Periodic Antenna	EMCO / 3146	9305-3614	LOGEMCO01	Lib. Labs/ April-2017
Quad Ridge Horn	ETS Lind. / 3164-04	00066988	HRNQR316401	Lib. Labs / April-2017
Quad Ridge Horn	Singer / A6100	C35200	HQR2TO18S01	Lib. Labs / April-2017
K-Band Horn	JEF / NRL Std.	001	HRNK01	WRTL / Jul-2017
Ka-Band Horn	JEF / NRL Std.	001	HRNKA001	WRTL / Jul-2017
Harmonic Mixer	Hewlett Packard / 11970W	2521A00179	MIX70TO11001	Keysight / Mar-2019
Harmonic Mixer	Hewlett Packard / 11970U	2332A01153	MIX40TO7001	Keysight / Mar-2019
Harmonic Mixer	Pacific mmWave / GMA	26	MIX110TO23001	PMP / On-Use
W-Band Horn	Cust. Micro. / HO10R	-	HRNW01	Cust.M. / On-Use
U-Band Horn	Cust. Micro. / HO19R	-	HRNU01	Cust.M. / On-Use
D/G-Band Horn	Cust. Micro. / HO5R	-	HRNG01	Cust.M. / On-Use

2 Test Specifications and Procedures

2.1 Test Specification and General Procedures

The ultimate goal of Autoliv ASP Inc. is to demonstrate that the Equipment Under Test (EUT) complies with the Rules and/or Directives below. Detailed in this report are the results of testing the Autoliv ASP Inc. NB24G175V1 for compliance to:

Country/Region	Rules or Directive	Referenced Section(s)
United States	Code of Federal Regulations	CFR Title 47, Part 15.249
Canada	ISED Canada	ISED RSS-310 (Verification)

It has been determined that the equipment under test is subject to the rules and directives above at the date of this testing. In conjunction with these rules and directives, the following specifications and procedures are followed herein to demonstrate compliance (in whole or in part) with these regulations.

ANSI C63.4:2014	"Methods of Measurement of Radio-Noise Emissions from Low-Voltage Electrical and Electronic Equipment in the Range of 9 kHz to 40 GHz"
ANSI C63.10:2013 (USA)	"American National Standard of Procedures for Compliance Testing of Unlicensed Wireless Devices"
IEEE Trans. EMC, Vol. 47, No. 3 August 2005	"Extrapolating Near-Field Emissions of Low-Frequency Loop Transmitters," J.D.Brunett, V.V.Liepa, D.L.Sengupta
ISED Canada	"The Measurement of Occupied Bandwidth"

3 Configuration and Identification of the Equipment Under Test

3.1 Description and Declarations

The EUT is an automotive communications radar. The EUT is approximately 9 x 6 x 1 cm (approx.) in dimension, and is depicted in Figure 1. It is powered by 13.4 VDC vehicle power system. In use, this device is permanently affixed in a motor vehicle. Table 3 outlines provider declared EUT specifications.

Figure 1: Photos of EUT.

Table 3: EUT Declarations.

General Declarations			
Equipment Type:	Communication Radar	**Country of Origin:**	Canada
Nominal Supply:	13.4 VDC	**Oper. Temp Range:**	-40° C to $+85^o$ C
Frequency Range:	$24.05 - 24.25$ GHz	**Antenna Dimension:**	Not Declared
Antenna Type:	integral patch array	**Antenna Gain:**	8.5 dBi (declared)
Number of Channels:	1	**Channel Spacing:**	Not Applicable
Alignment Range:	Not Declared	**Type of Modulation:**	Pulsed FMCW
United States			
FCC ID Number:	WU8NB24G175V1	**Classification:**	DXX
Canada			
IC Number:	NOT-APPLICABLE	**Classification:**	CANADA 310

3.1.1 EUT Configuration

The EUT is configured for testing as depicted in Figure 2.

3.1.2 Modes of Operation

The EUT is capable of two frequency swept encoded transmission modes, an LH mode and an RH mode (for use when installed on opposite sides of a vehicle). For both modes, the device transmits a the same pulse encoded frequency sweep (chirp) from one of its two transmit antennas, followed by a 28 ms encoded pulse transmission (fixed at 24.0596 GHz in the RH mode and 24.0666 GHz in the LH mode), all of which repeats every 80 ms. The chirped (frequency swept) encoded transmission consists of 4 frames with variable width pulses repeating every 31.6 us. The fixed 28ms transmission consists of encoded pulses with 50 percent duty cycle. Maximum dwell time occurs at the frequency of the Fixed 28ms pulsed emission. All antenna arrays exhibit a manufacturer declared peak antenna gain

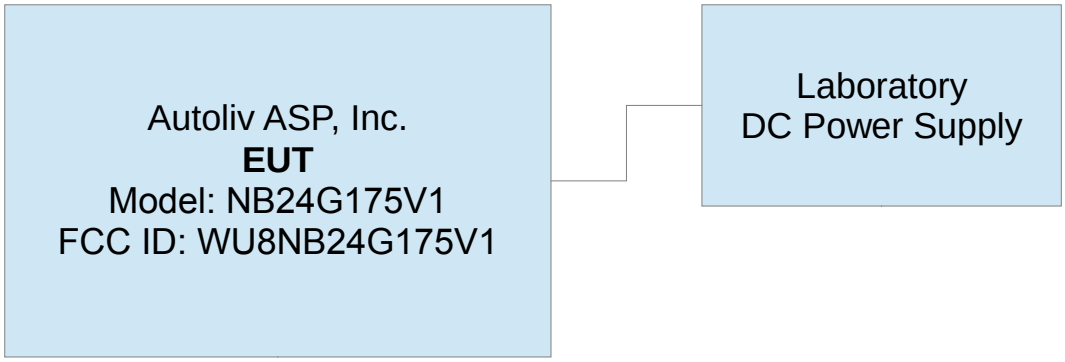

Figure 2: EUT Test Configuration Diagram.

of 8.5 dBi individually and emit uniform broadside patterns (e.g. normal to the radome). Only one transmit antenna is employed at a time; transmissions alternate between the two every other period.

3.1.3 Variants

There is only a single variant of the EUT, as tested.

3.1.4 Test Samples

Three (3) samples in all were provided; two normal operating samples capable of software configuration via a computer for CW mode and up-chirp and down-chirp testing, and one sample dismantled for photos.

3.1.5 Functional Exerciser

Normal operating EUT functionality was verified by observation of transmitted signal.

3.1.6 Modifications Made

There were no modifications made to the EUT by this laboratory.

3.1.7 Production Intent

The EUT appears to be a production ready sample.

3.1.8 Declared Exemptions and Additional Product Notes

The EUT is permanently installed in a transportation vehicle. As such, digital emissions are exempt from US and Canadian digital emissions regulations (per FCC 15.103(a) and IC correspondence on ICES-003). In the mm-wave band, narrow encoded pulses arise both as part of the communications encoding and as the signal chirps past the receiver tuned frequency. To avoid amplitude measurement error due to Pulse Desensitization, we measure peak emissions only when the radar is either placed into CW mode or when the signal Dwells at a single frequency for an extended period of time. In computation of duty cycle for the encoded chirp data transmission, pulse desensitization may cause the measurement receiver with a narrow IFBW to report wider than actual pulse widths, and thus greater on-time and lower duty cycle based on the calculation method. Duty cycle herein is a worst-case computation, applied to a properly measured peak emission.

4 Emissions

4.1 General Test Procedures

4.1.1 Radiated Test Setup and Procedures

Radiated electromagnetic emissions from the EUT are first pre-scanned in our shielded anechoic chamber or GTEM test cell. Spectrum and modulation characteristics of all emissions are recorded. Instrumentation, including spectrum analyzers and other test equipment as detailed in Section 1.7 are employed. After pre-scan, emission measurements are made on the test site of record. If the EUT connects to auxiliary equipment and is table or floor standing, the configurations prescribed in relevant test standards are followed. Alternatively, a layout closest to normal use (as declared by the provider) is employed if the resulting emissions appear to be worst-case in such a configuration. See Figure 3. All intentionally radiating elements that are not fixed-mounted in use are placed on the test table lying flat, on their side, and on their end (3-axes) and the resulting worst case emissions are recorded. If the EUT is fixed-mounted in use, measurements are made with the device oriented in the manner consistent with installation and then emissions are recorded.

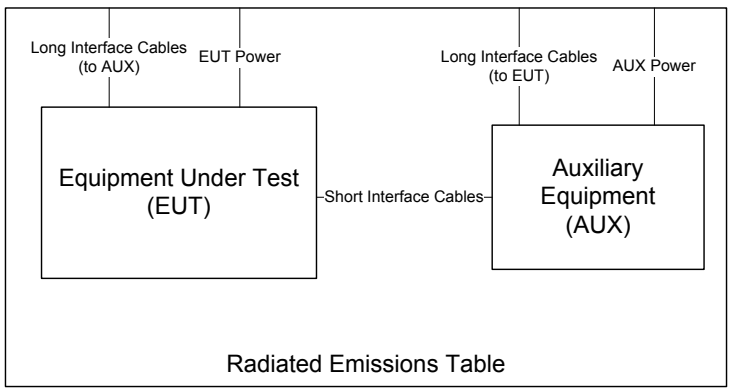

Figure 3: Radiated Emissions Diagram of the EUT.

If the EUT exhibits spurious emissions due to internal receiver circuitry, such emissions are measured with an appropriate carrier signal applied. For devices with intentional emissions below 30 MHz, a shielded loop antenna is used. It is placed at a 1 meter receive height. Emissions between 30 MHz and 1 GHz are measured using tuned dipoles and/or calibrated broadband antennas. For both horizontal and vertical polarizations, the test antenna is raised and lowered from 1 to 4 m in height until a maximum emission level is detected. The EUT is then rotated through 360° in azimuth until the highest emission is detected. The test antenna is then raised and lowered one last time from 1 to 4 m and the worst case value is recorded. Emissions above 1 GHz are characterized using standard gain horn or broadband ridge-horn antennas on our OATS with a 4×5 m rectangle of H-4 absorber placed over the ground screen covering the OATS ground screen. Care is taken to ensure that test receiver resolution and video bandwidths meet the regulatory requirements, and that the emission bandwidth of the EUT is not reduced. Photographs of the test setup employed are depicted in Figure 4.

Where regulations allow for direct measurement of field strength, power values (dBm) measured on the test receiver / analyzer are converted to dBμV/m at the regulatory distance, using

$$E_{dist} = 107 + P_R + K_A - K_G + K_E - C_F$$

where P_R is the power recorded on spectrum analyzer, in dBm, K_A is the test antenna factor in dB/m, K_G is the combined pre-amplifier gain and cable loss in dB, K_E is duty correction factor (when applicable) in dB, and C_F is a distance conversion (employed only if limits are specified at alternate distance) in dB. This field strength value is then compared with the regulatory limit. If effective isotropic radiated power (EIRP) is computed, it is computed as

$$EIRP(dBm) = E_{3m}(dB\mu V/m) - 95.2.$$

When presenting data at each frequency, the highest measured emission under all possible EUT orientations (3-axes) is reported.

Where regulations call for substitution method measurements, the EUT is replaced by a substitution antenna if field strength measurements indicate the emission is close to the regulatory limit. This antenna is co-polarized with the test antenna and tuned (when necessary) to the emission frequency, after which the test antenna height is again optimized. The substitution antenna's signal level is adjusted such that its emission is equal to the level measured from the EUT. The signal level applied to the substitution antenna is then recorded. Effective isotropic radiated power (EIRP) and effective radiated power (ERP) in dBm are formulated from

$$EIRP = P_T - G_A = ERP + 2.16, \tag{1}$$

where P_T is the power applied to substitution antenna in dBm, including correction for cable loss, and G_A is the substitution antenna gain, in dBi.

When microwave measurements are made at a range different than the regulatory distance or made at close-range to improve receiver sensitivity, the reading is corrected back to the regulatory distance. This is done using a 20 dB/decade field behavior as dictated by the test procedures. When measurements are made in the near-field, the near-field/far-field boundary (N/F) is reported. It is computed as

$$N/F = 2D^2/\lambda$$

where D is the maximum dimension of the transmitter or receive antenna, and λ is the wavelength at the measurement frequency. Typically for high frequency measurements the receive antenna is connected to test receiver / analyzer through an external mixer. In this case, cable loss, IF amplifier gain, and mixer conversion losses are corrected for in the data table, or directly in the spectrum analyzer.

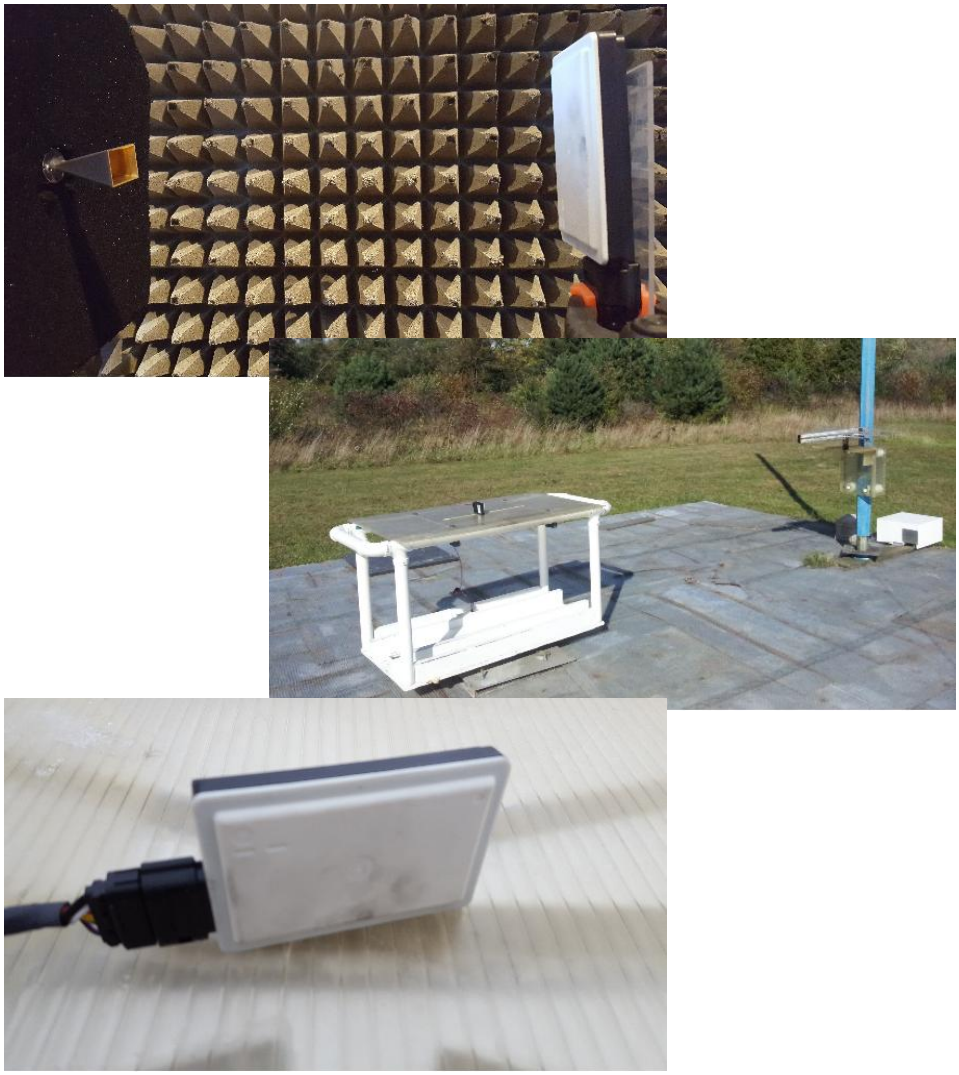

Figure 4: Radiated Emissions Test Setup Photograph(s).

4.1.2 Conducted Emissions Test Setup and Procedures

Vehicle Power Conducted Spurious The EUT is not subject to power line conducted emissions regulations as it is powered solely by the vehicle power system for use in said motor vehicle.

4.1.3 Power Supply Variation

Tests at extreme supply voltages are made if required by the the procedures specified in the test standard, and results of this testing are detailed in this report.

4.1.4 Thermal Variation

Tests at extreme temperatures are made if required by the procedures specified in the test standard, and results of this testing are detailed in this report. The provider has declared that the EUT is designed for operation over the temperature range -40° C to $+85^o$ C. Before any temperature measurements are made, the equipment is allowed to reach a thermal balance in the test chamber, temperature and humidity are recorded, and thermal balance is verified via a thermocouple–based probe.

4.2 Intentional Emissions

4.2.1 Fundamental Emission Pulsed Operation

The details and results of testing the EUT for pulsed operation are summarized in Table 4. Plots showing the measurements made to obtain these values are provided in Figure 5.

Table 4: Pulsed Emission Characteristics (Duty Cycle).

Detector	Span	IF Bandwidth	Video Bandwidth
Pk	0	10 MHz	28 MHz

Test Date: 10-Dec-16
Test Engineer: Joseph Brunett
EUT: Autoliv GM175
EUT Mode: Modulated
Meas. Distance: 10 cm

FCC/IC

		Overall Transmission			Internal Frame Characteristics			Computed Duty Cycle	
#	EUT Test Mode*	Min. Repetition Rate (sec)	Max. No. of Frames	Total Transmission Length (sec)	Max. Frame Length (ms)	Min. Frame Period (ms)	Frame Encoding	(%)	(dB)
1	LH	0.080	2		28.0	80.0	Worst Case periodic emission occurs at the frequency where both the FIXED FRAME SET and CHIRP FRAME SET occur. At this frequency, a 28ms FIXED frame with 0.716 us / 1.365 us duty is followed by CHIRPed frames for 3.714ms. The CHIRPed frames consist of 4 sub-frames with 3.8 us of on time repeated every 31.6us.	20.6	13.7
2	RH	0.080	2		28.0	80.0	Same as above.	20.6	13.7

Example Calculation: Worst Case Duty (%) = ((0.716 us / 1.365us) x 28ms + ((4 x 3.8 us)/ 31.6us) x 3.714ms) / 80 ms x 100 = 20.6 %

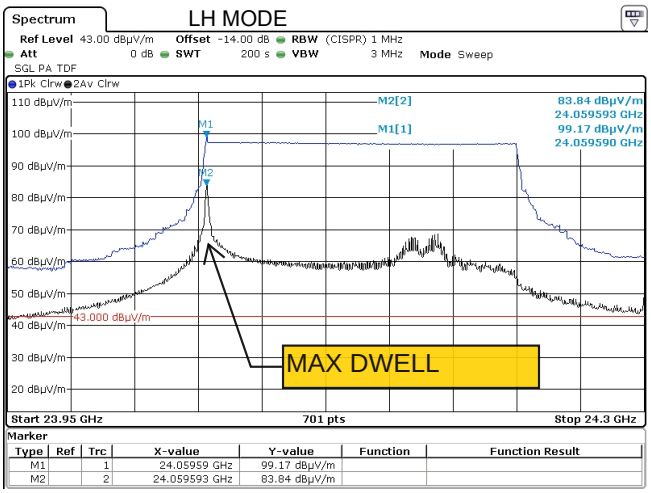

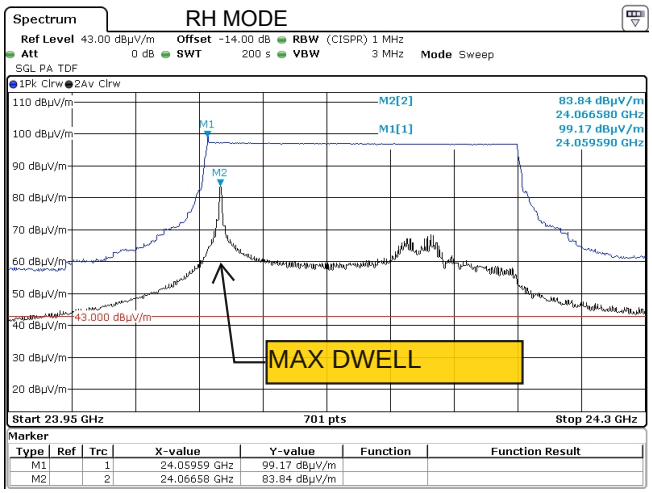

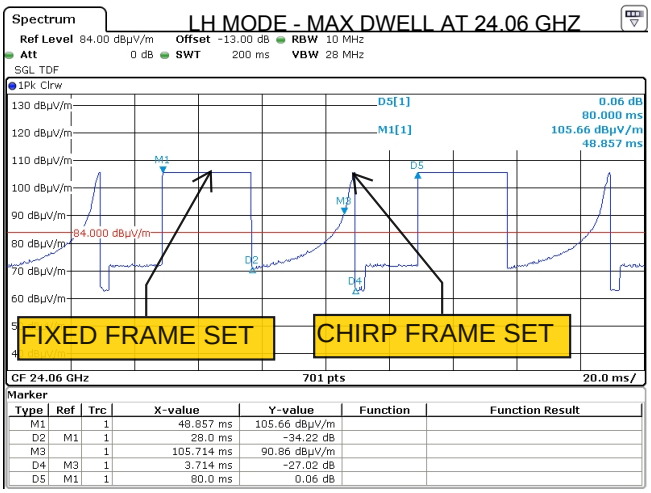

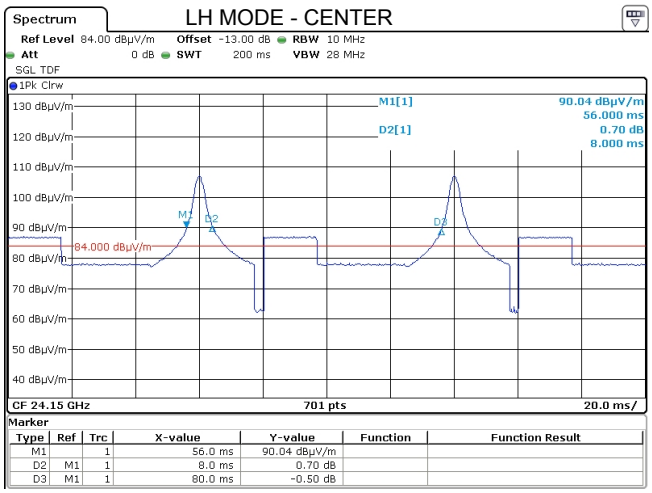

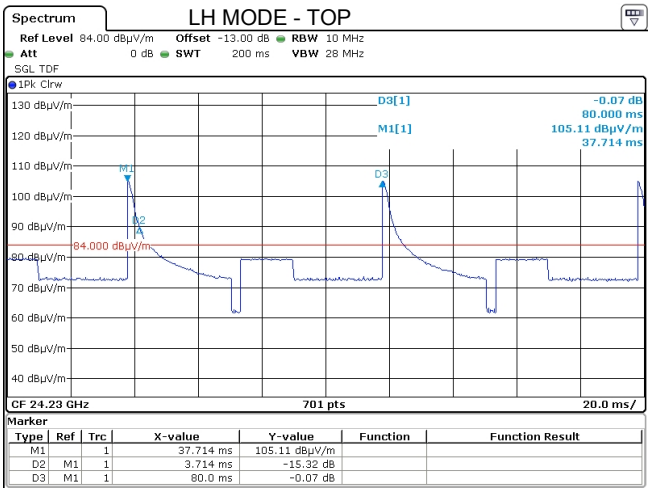

Figure 5(a): Pulsed Emission Characteristics (Duty Cycle).

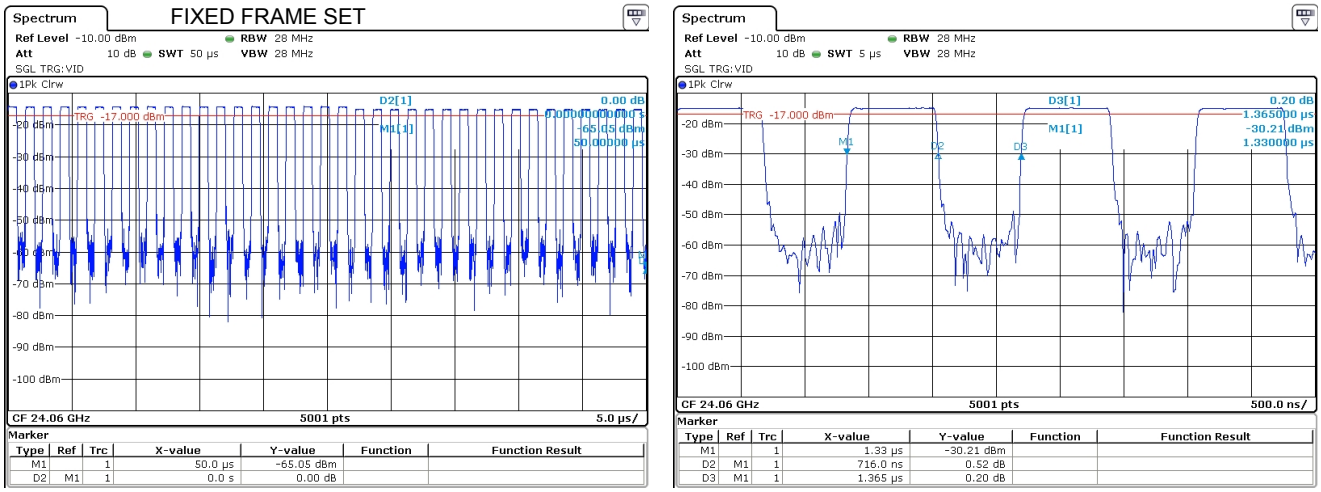

Figure 5(b): Pulsed Emission Characteristics (Duty Cycle).

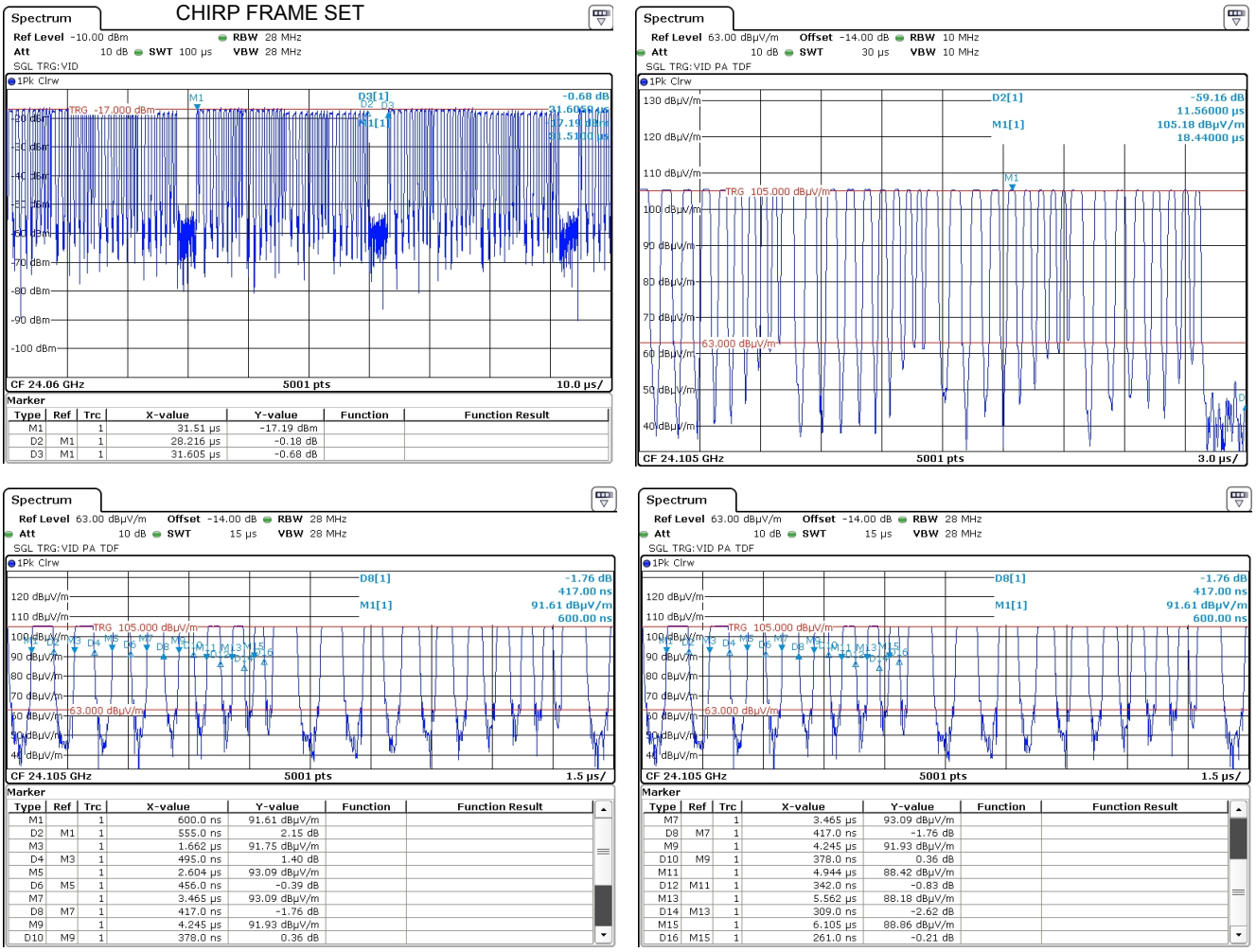

Figure 5(c): Pulsed Emission Characteristics (Duty Cycle).

4.2.2 Fundamental Emission Bandwidth

Emission bandwidth (EBW) of the EUT is measured with the device placed in the test mode(s) with the shortest available frame length and minimum frame spacing. Radiated emissions are recorded following the test procedures listed in Section 2.1. The 20 dB EBW is measured as the max-held peak-detected signal when the IF bandwidth is greater than or equal to 1% of the receiver span. For complex modulations other than ASK and FSK, the 99% emission bandwidth per IC test procedures has a different result, and is also separately reported.The results of EBW testing are summarized in Table 5. Plots showing measurements employed to obtain the emission bandwidth reported are provided in Figure 6.

Table 5: Intentional Emission Bandwidth.

			Test Date:	30-Oct-16
Detector	**IF Bandwidth**	**Video Bandwidth**	**Test Engineer:**	Joseph Brunett
Pk	5 MHz	20 MHz	**EUT:**	Autoliv GM175
			EUT Mode:	Modulated
			Meas. Distance:	10 cm

						FCC/IC
#	Modulation	Center Frequency (GHz)	20 dB EBW (MHz)	99% OBW (MHz)		
1	RH	24.125	194.72	175.46		
2	LH	24.125	193.30	174.75		

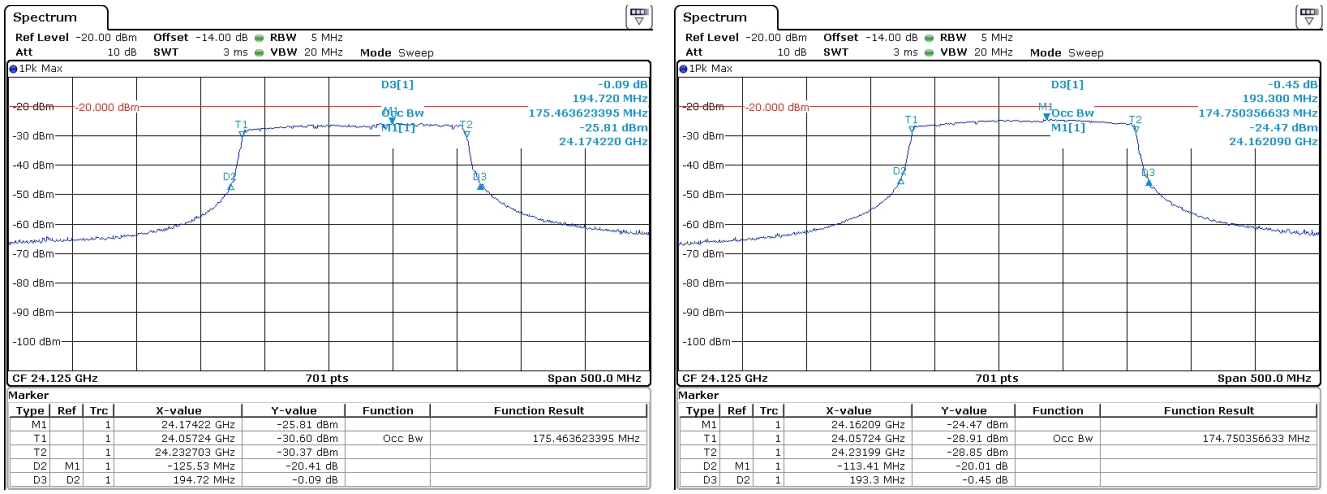

Figure 6: Intentional Emission Bandwidth.

4.2.3 Fundamental Emission

Following the test procedures listed in Section 2.1, field emissions measurements are made on the EUT for both Horizontal and Vertically polarized coupling fields. The EUT's loop antenna(s) are measured when the EUT loop axes are (1) aligned along the same axis as the test loop antenna and horizontal with respect to the test site ground plane, (2) aligned coplanar (in the same plane) with the test antenna and aligned horizontal with respect to the test site ground plane, and (3) aligned coplanar (in the same plane) with the test antenna and vertical with respect to the test site ground plane. Table 6 details the results of these measurements.

Table 6: Fundamental Radiated Emissions.

Frequency Range	Det	IF Bandwidth	Video Bandwidth
25 MHz ≤ f ≤ 1 000 MHz	Pk/QPk	100 kHz	300 kHz
f > 1 000 MHz	Pk/Avg	1 MHz	3 MHz

Test Date:	10-Dec-16
Test Engineer:	Joseph Brunett
EUT:	Autoliv GM175
Mode:	CW
Meas. Distance:	3m / 60cm

		Frequency Band		Test Antenna + Cable					Rx. Power*		Range Correction				E-Field @ Des.**				EIRP*****			
															Computed		FCC Limit		Computed			
#	Mode	Start MHz	Stop MHz	Ant. Quality Number	Pol. H/V	Dim. cm	Ka dB/m	Kg dB	Peak dBm	Avg dBm	Meas. m	Des. m	N/F m	CF*** dB	Pk dBuV/m	Avg dBuV/m	Pk dBuV/m	Avg dBuV/m	Pk dBm	Avg dBm	Pass By dB	Comments
1	CW	24059.6	24059.6	HRNK01	H/V	10.2	33.2	0.0			3.0	3.0	1.7	0.0	110.2	96.4	128.0	108.0	15.0		**11.5**	low (max ANT1, ANT2)
2	CW	24125.0	24125.0	HRNK01	H/V	10.2	33.2	0.0			3.0	3.0	1.7	0.0	107.9	94.1	128.0	108.0	12.7		13.8	mid (max ANT1, ANT2)
3	CW	24228.4	24228.4	HRNK01	H/V	10.2	33.2	0.0			3.0	3.0	1.7	0.0	107.2	93.5	128.0	108.0	12.0		14.5	high (max ANT1, ANT2)
4																						
5																						

*QPk detection below 1 GHz, Avg detection at or above 1 GHz with receiver bandwidth as specified at top of table.

** When E-field is reported directly from Spectrum Analyzer, Antenna Factors and Cable losses are included directly in SA settings. Avg is computed from Pk (CW) via Duty Cycle computed previously.

*** CF is computed assuming a 20 dB/decade Far-field Decay Rate per ANSI-C63.10:2013 Test Procedures.

**** EIRP is computed from field strength at 3 meter distance. If emission is within 6 dB of regulatory limit, then substitution method measurement may be employed to determine exact EIRP.

Equipment Used: HRNK01, RSFSV3001

4.3 Unintentional Emissions

4.3.1 Transmit Chain Spurious Emissions

The results for the measurement of transmit chain spurious emissions at the nominal voltage and temperature are provided in Table 7. Following the test procedures listed in Section 2.1, field emissions measurements are made on the EUT for both Horizontal and Vertically polarized coupling fields. The EUT's loop antenna(s) are measured when the EUT loop axes are (1) aligned along the same axis as the test loop antenna and horizontal with respect to the test site ground plane, (2) aligned coplanar (in the same plane) with the test antenna and aligned horizontal with respect to the test site ground plane, and (3) aligned coplanar (in the same plane) with the test antenna and vertical with respect to the test site ground plane. The results for the measurement of transmit chain spurious emissions at the nominal voltage and temperature are provided in Table 7. Measurements are performed to 10 times the highest fundamental operating frequency.

Table 7: Transmit Chain Spurious Emissions.

Frequency Range	Det	IF Bandwidth	Video Bandwidth
25 MHz ≤ f ≤ 1 000 MHz	Pk/QPk	120 kHz	300 kHz
f > 1 000 MHz	Pk	1 MHz	3 MHz
f > 1 000 MHz	Avg (RMS)	1 MHz	3 MHz

Test Date:	12/10/16
Test Engineer:	Joseph Brunett
EUT:	Autoliv GM175
Mode:	Modulated (LH and RH)
Meas. Distance:	See Table.

FREQ < 40 GHZ

#	Env. Temp. (C)	Env. Volt. (V)	Frequency Band Start MHz	Frequency Band Stop MHz	Antenna + Cable*** Quality Number	Pol. H/V	Dim. cm	Ka dB/m	Kg dB	Rx. Power Pk dBm	Rx. Power Qpk dBm	Range Correction* MR m	DR m	N/F m	CF dB	E-Field @ DR**** Pk dBuV/m	E-Field @ DR**** Qpk dBuV/m	EIRP** Pk dBm	EIRP** Avg dBm	S @ DR Pk dBm/cm2	S @ DR Avg dBm/cm2	E-Field Limit Pk dBuV/m	E-Field Limit Qpk dBuV/m	Pass By dB	Comments
1	20	13.4	30.0	88.0	BICEMCO01	H/V	22.0	16.9	35.0			3.0	3.0	0.0	0.0	28.9							40.0	11.1	max all, noise
2	20	13.4	88.0	216.0	BICEMCO01	H/V	22.0	16.9	35.0			3.0	3.0	0.1	0.0	32.9							43.5	10.6	max all, noise
3	20	13.4	216.0	1000.0	LOGEMCO01	H/V	22.0	20.1	29.9			3.0	3.0	0.3	0.0	39.1							46.0	6.9	max all, noise
#	Env. Temp. (C)	Env. Volt. (V)	Frequency Band Start MHz	Frequency Band Stop MHz	Antenna + Cable*** Quality Number	Pol. H/V	Dim. cm	Ka dB/m	Kg dB	Rx. Power Pk dBm	Rx. Power Avg dBm	Range Correction* MR m	DR m	N/F m	CF dB	E-Field @ DR**** Pk dBuV/m	E-Field @ DR**** Avg dBuV/m	EIRP* Pk dBm	EIRP* Avg dBm	S @ DR Pk dBm/cm2	S @ DR Avg dBm/cm2	E-Field Limit Pk dBuV/m	E-Field Limit Avg dBuV/m	Pass By dB	Comments
4	20	13.4	1000.0	6000.0	HRNQR316401	H/V	22.0	24.1	-1.3			3.0	3.0	1.9	0.0	43.2						74.0	54.0	30.8	max all, noise
5	20	13.4	1122.4	1122.4	HRNQR316401	H/V	22.0	24.2	-1.3			3.0	3.0	0.4	0.0	29.4						74.0	54.0	44.6	max all
6	20	13.4	1442.0	1442.0	HRNQR316401	H/V	22.0	26.6	-1.3			3.0	3.0	0.5	0.0	31.1						74.0	54.0	42.9	max all
7	20	13.4	2136.4	2136.4	HRNQR316401	H/V	22.0	30.5	-1.3			3.0	3.0	0.7	0.0	36.8						74.0	54.0	37.2	max all
8	20	13.4	2461.0	2461.0	HRNQR316401	H/V	22.0	32.7	-1.3			3.0	3.0	0.8	0.0	36.2						74.0	54.0	37.8	max all
9	20	13.4	5882.6	5882.6	HRNQR316401	H/V	22.0	32.1	-1.3			3.0	3.0	1.9	0.0	43.2						74.0	54.0	30.8	max all
10	20	13.4	6000.0	18000.0	HQR2TO18S01	H/V	15.0	35.0	-2.5			3.0	3.0	2.7	0.0	64.0	46.7					74.0	54.0	7.3	max all, noise
11	20	13.4	12029.7	12029.7	HQR2TO18S01	H/V	15.0	35.0	-2.5			3.0	3.0	1.8	0.0	50.2	44.6					74.0	54.0	9.4	LO
12	20	13.4	12069.5	12069.5	HQR2TO18S01	H/V	15.0	35.0	-2.5			3.0	3.0	1.8	0.0	48.5	28.5					74.0	54.0	25.5	LO
13	20	13.4	12113.5	12113.5	HQR2TO18S01	H/V	15.0	35.0	-2.5			3.0	3.0	1.8	0.0	48.8	28.8					74.0	54.0	25.2	LO
14	20	13.4	18000.0	24000.0	HRNK01	H/V	10.2	33.2	0.0			0.6	3.0	1.7	-14.0	63.0	51.4					74.0	54.0	2.6	max all
15	20	13.4	24000.0	24000.0	HRNK01	H/V	10.2	33.2	0.0			0.6	3.0	1.7	-14.0	62.9	51.4					74.0	54.0	2.7	LH – LOW BANDEDGE
16	20	13.4	24250.0	24250.0	HRNK01	H/V	10.2	33.2	0.0			0.6	3.0	1.7	-14.0	71.7	53.5					74.0	54.0	**0.5**	LH – HIGH BANDEDGE
17	20	13.4	24000.0	24000.0	HRNK01	H/V	10.2	33.2	0.0			0.6	3.0	1.7	-14.0	63.0	49.3					74.0	54.0	4.7	RH – LOW BANDEGE
18	20	13.4	24250.0	24250.0	HRNK01	H/V	10.2	33.2	0.0			0.6	3.0	1.7	-14.0	71.5	53.6					74.0	54.0	**0.4**	RH – HIGH BANDEGE
19	20	13.4	24250.0	26500.0	HRNK01	H/V	10.2	33.7	0.0			0.6	3.0	1.8	-14.0	71.7	53.6					74.0	54.0	0.4	max all
20	20	13.4	26500.0	40000.0	HRNKA01	H/V	9.2	37.2	36.0			0.6	3.0	2.3	-14.0	62.1	42.3					74.0	54.0	11.7	max all, noise

FREQ >= 40 GHZ

#	Env. Temp. (C)	Env. Volt. (V)	Frequency Band Start GHz	Frequency Band Stop GHz	Antenna + Cable*** Quality Number	Pol. H/V	Dim. cm	Ka dB/m	Kg dB	Rx. Power Pk dBm	Rx. Power Avg dBm	Range Correction* MR m	DR m	N/F m	CF dB	E-Field @ DR**** Pk dBuV/m	E-Field @ DR**** Avg dBuV/m	EIRP* Pk dBm	EIRP* Avg dBm	S @ DR Pk dBm/cm2	S @ DR Avg dBm/cm2	E-Field Limit Pk dBuV/m	E-Field Limit Avg dBuV/m	Pass By dB	Comments
21	20	13.4	40.0	70.0	HRNU001	H/V	6.3	39.1	0.0			0.30	3.0	1.9	-20.0	64.1	50.4					74.0	54.0	3.6	max all, noise
22	20	13.4	48.1	48.1	HRNU001	H/V	6.3	39.1	0.0			0.30	3.0	1.3	-20.0	63.6	49.9					88.0	68.0	18.1	harmonic, low
23	20	13.4	48.3	48.3	HRNU001	H/V	6.3	39.1	0.0			0.30	3.0	1.3	-20.0	64.1	50.4					88.0	68.0	17.6	harmonic, mid
24	20	13.4	48.5	48.5	HRNU001	H/V	6.3	39.1	0.0			0.30	3.0	1.3	-20.0	62.6	48.9					88.0	68.0	19.1	harmonic, high
25	20	13.4	70.0	110.0	HRNW001	H/V	6.0	46.4	0.0	-52.9	-69.8	0.01	3.0	2.6	-49.5	51.0	34.1					74.0	54.0	19.9	max all, noise
26	20	13.4	72.2	72.2	HRNW001	H/V	6.0	46.4	0.0			0.05	3.0	1.7	-35.6	65.7	52.0					88.0	68.0	16.0	harmonic, low
27	20	13.4	72.4	72.4	HRNW001	H/V	6.0	46.4	0.0			0.05	3.0	1.7	-35.6	64.9	51.2					88.0	68.0	16.8	harmonic, mid
28	20	13.4	72.7	72.7	HRNW001	H/V	6.0	46.4	0.0			0.05	3.0	1.7	-35.6	65.2	51.5					88.0	68.0	16.5	harmonic, high
29																									

* CF is computed assuming a 20 dB/decade Decay Rate. DR is Regulatory Range Distance. MR is Measurement Distance.

** EIRP is computed from field strength at 3 meter distance. If emission is within 6 dB of regulatory limit, then substitution method measurement is employed to determine exact EIRP.

*** Dimension of antenna is taken to be larger of the test antenna and the DUT antenna; DUT antenna is 6cm in dimension.

**** For harmonics, Avg is computed from Peak via Duty Cycle. For Spurious, Pk and Avg/QPk are both measured values.

Equipment Used: RSFSV30001, MIX26TO4001, MIX40TO7001, MIX70TO10001, HRNU001, HRNW001, HRNG001

5 Measurement Uncertainty

The maximum values of measurement uncertainty for the laboratory test equipment and facilities associated with each test are given in the table below. This uncertainty is computed for a 95.45% confidence level based on a coverage factor of $k = 2$.

Table 8: Measurement Uncertainty.

Measured Parameter	**Measurement Uncertainty**†
Radio Frequency	$\pm(f_{Mkr}/10^7 + RBW/10 + (SPN/(PTS-1))/2 + 1\,\text{Hz})$
Conducted Emm. Amplitude	$\pm 1.8\,\text{dB}$
Radiated Emm. Amplitude ($30 - 200\,\text{MHz}$)	$\pm 2.7\,\text{dB}$
Radiated Emm. Amplitude ($200 - 1000\,\text{MHz}$)	$\pm 2.5\,\text{dB}$
Radiated Emm. Amplitude ($f > 1000\,\text{MHz}$)	$\pm 3.7\,\text{dB}$
DC and Low Frequency Voltages	$\pm 2\%$
Temperature	$\pm 0.5°\text{C}$
Humidity	$\pm 5\%$

†Ref: CISPR 16-4-2:2011+A1:2014