YADA
CONNECTIVITY FOR LIFE

CAR BABY CAMERA

WITH APP CONTROLLED

BT532925

User Manual

Important, retain for future reference:
Read carefully

QUICK INSTALLATION GUIDE

Before you begin... Gather these items.

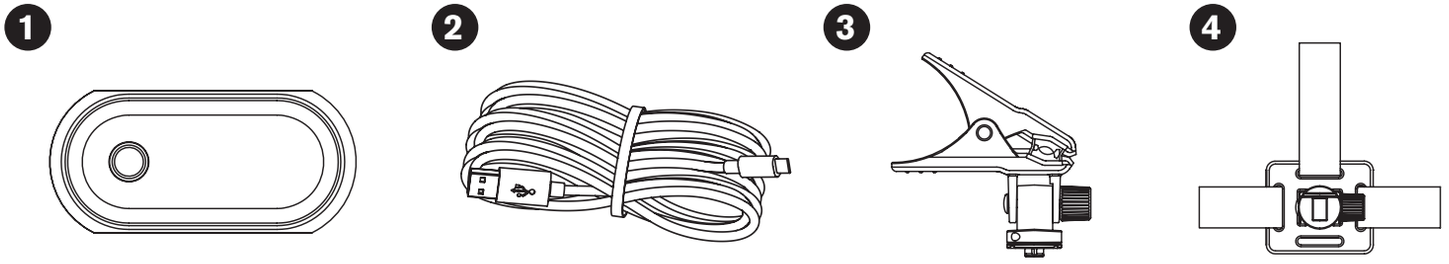

1. Mount the Car Baby Camera

Option 1

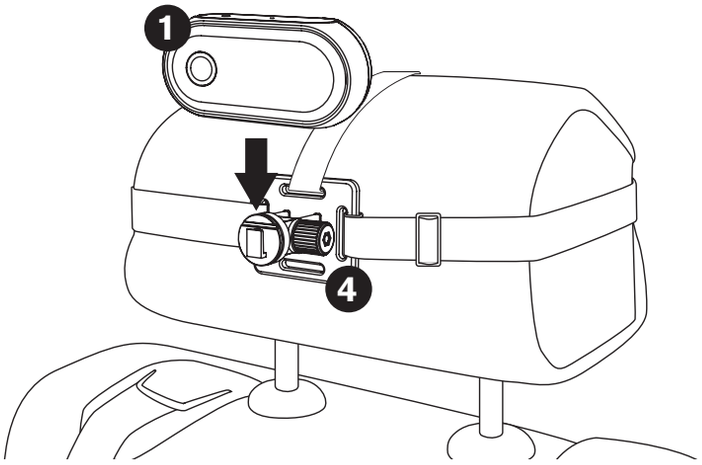

Option 2

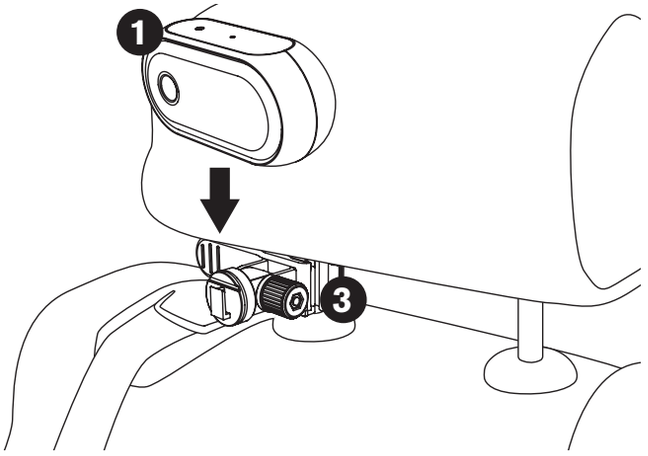

2. Connect to Power

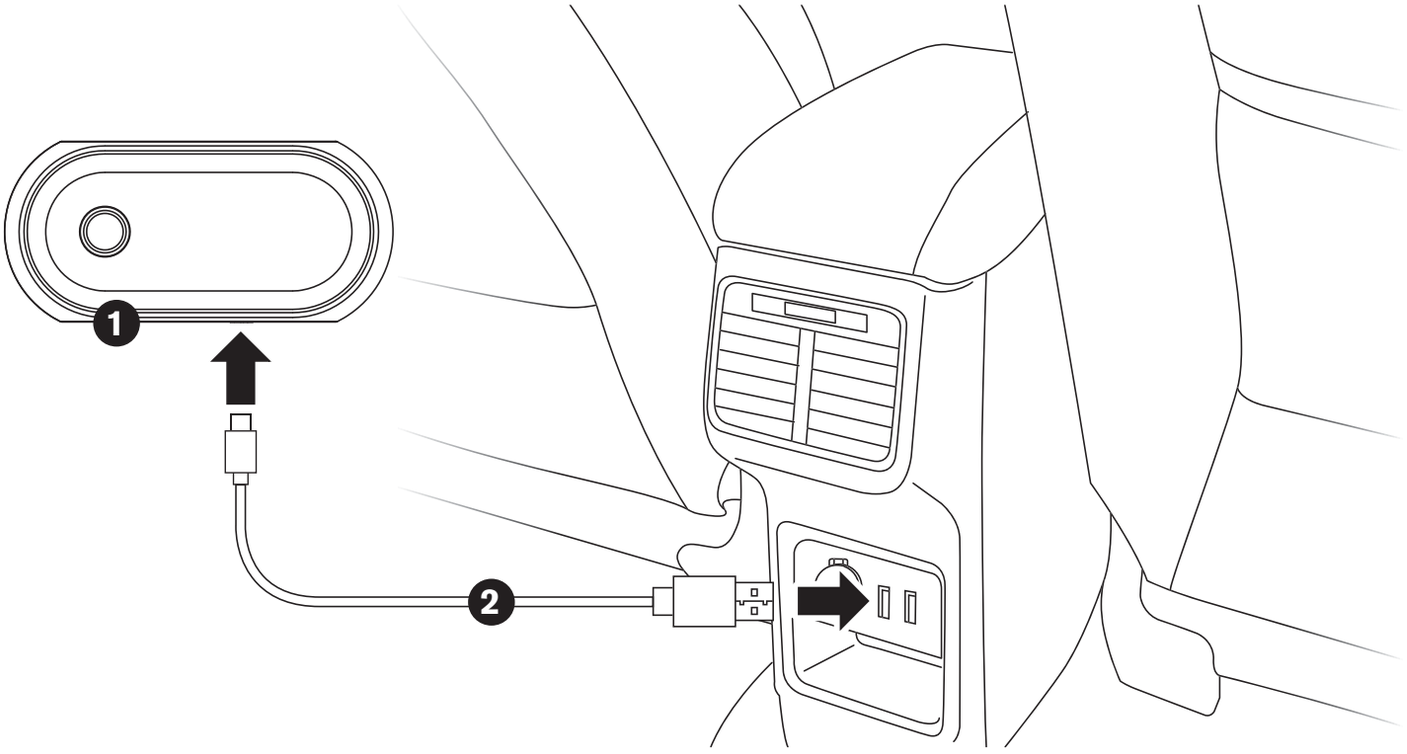

INTRODUCTION

Please read all of the installation instructions carefully before installing the product. Improper installation will void manufacturer's warranty. The installation instructions do not apply to all types of vehicles, and are written as guidelines to assist in installing the system.

Consult an experienced technician if you are not comfortable installing the product. You can also contact YADA at **1.866.294.9244** to speak to one of our installation specialists if you have any specific questions regarding the Car Baby Camera with APP Controlled.

BEFORE using the Car Baby Camera with APP Controlled, please read the safety information provided in this user manual. ALWAYS use the product as outlined in this user manual.

Please make sure to read and understand all local laws and regulations regarding cameras and their use in a vehicle. Laws vary by state.

PRODUCT SPECIFICATIONS

Frequency:	2.4 GHz
Camera Resolution:	FHD 1080P
Camera Viewing Angle:	FOV(H) 137.4°
Operating Temperature:	14°F~122°F (-10°C~50°C)
Operating Voltage:	DC 5V (USB-C)
Maximum Signal Range:	33 Feet / 10 Meters (without interference or obstruction)

PACKAGE CONTENTS

1. 1 x Car Baby Camera
2. 1 x 9.8 feet / 3 meters USB-C Cable
3. 1 x Spring Loaded Clamp
4. 1 x Headrest Mount with Straps
5. 1 x User Manual & Quick Installation Guide

1

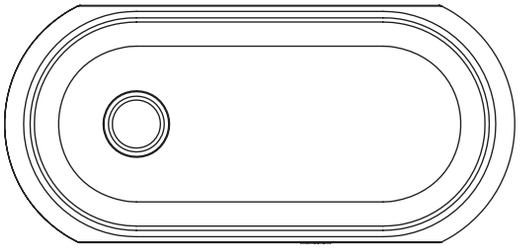

2

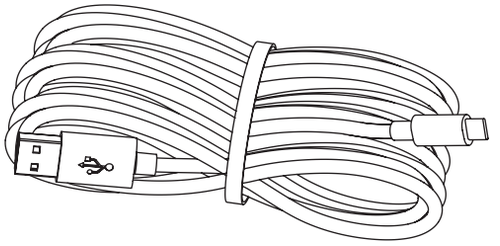

3

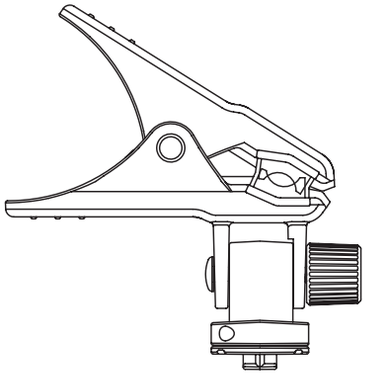

4

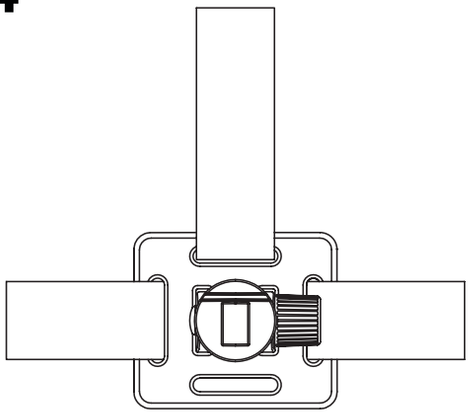

5

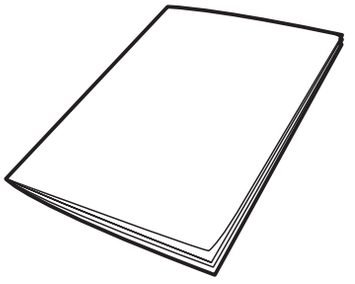

PRODUCT OVERVIEW

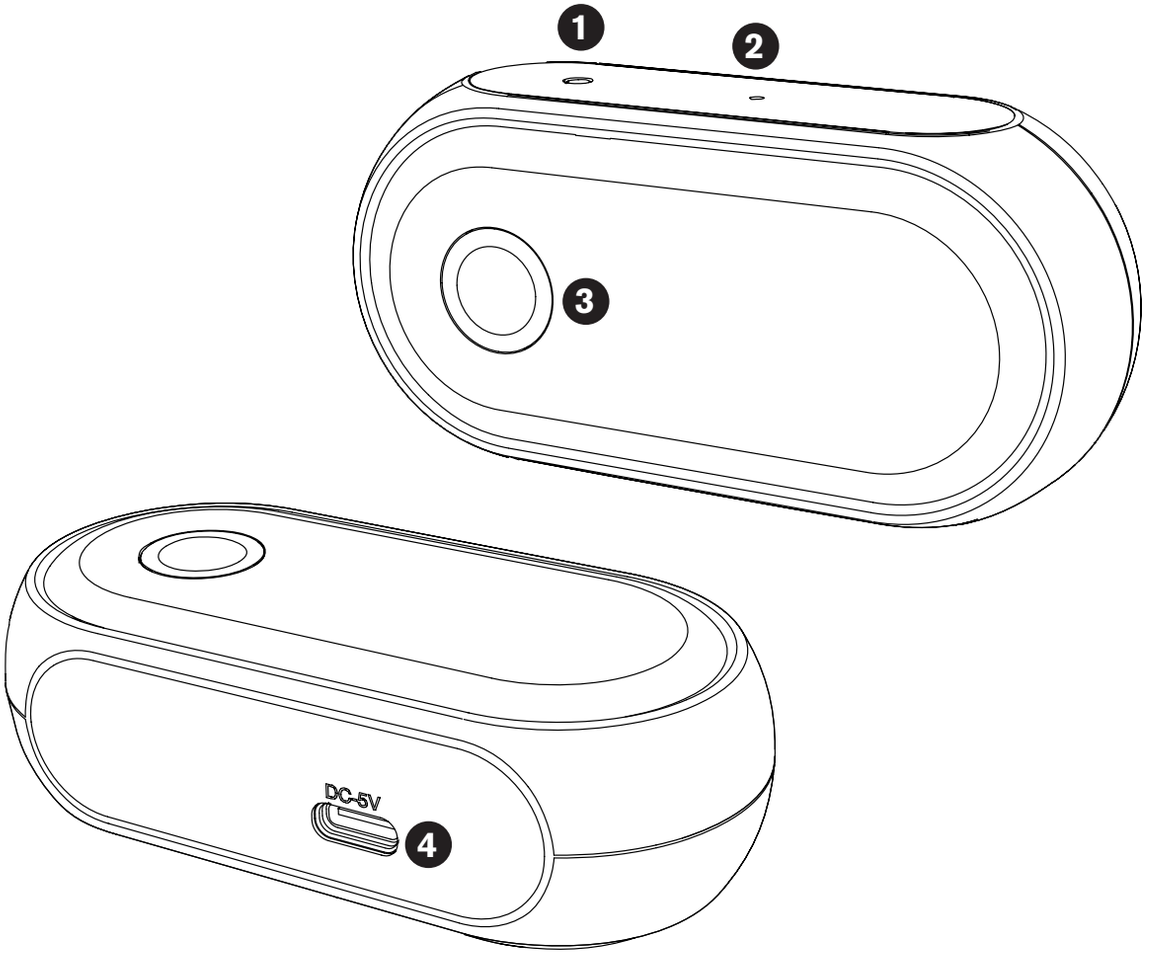

1. Light Sensor
2. LED Indicator
3. Camera Lens
4. USB-C Power Port

CAMERA DIMENSIONS

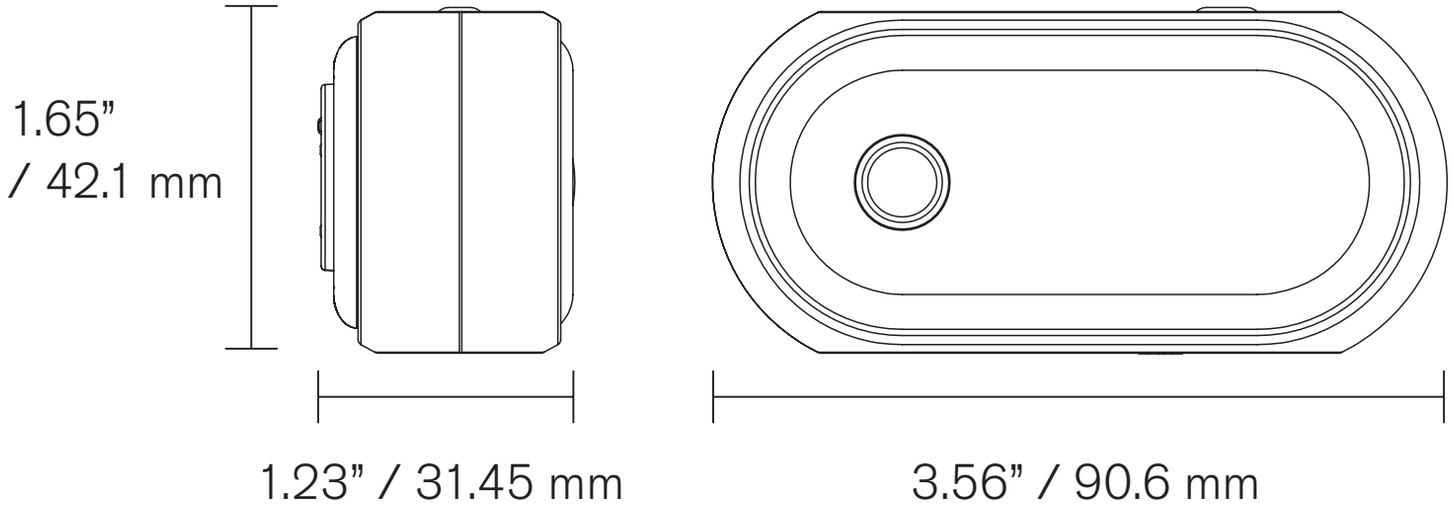

INSTALLATION

We recommend placing the camera at a spot where it can capture your baby’s entire car seat so you can monitor him/her at all times. However, for safety measures, please make sure that the camera is not placed anywhere near the airbag. Please see next page for some installation options:

Option 1: Headrest Mount with Straps

Attach the camera mount to the headrest of your seat using Headrest Mount with Straps. Secure the mount by pulling both the vertical and the horizontal straps until they are tight and stable. The rotating knob on the mount can be used to adjust the angle of the mount.

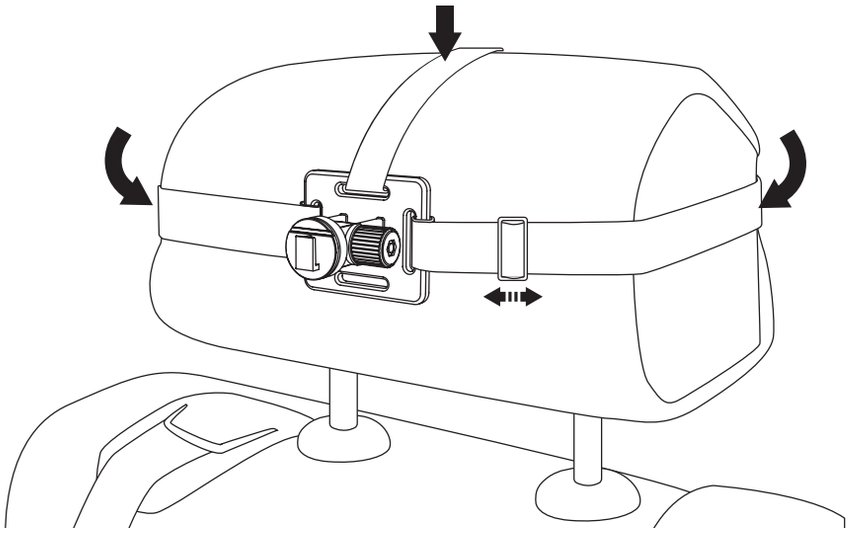

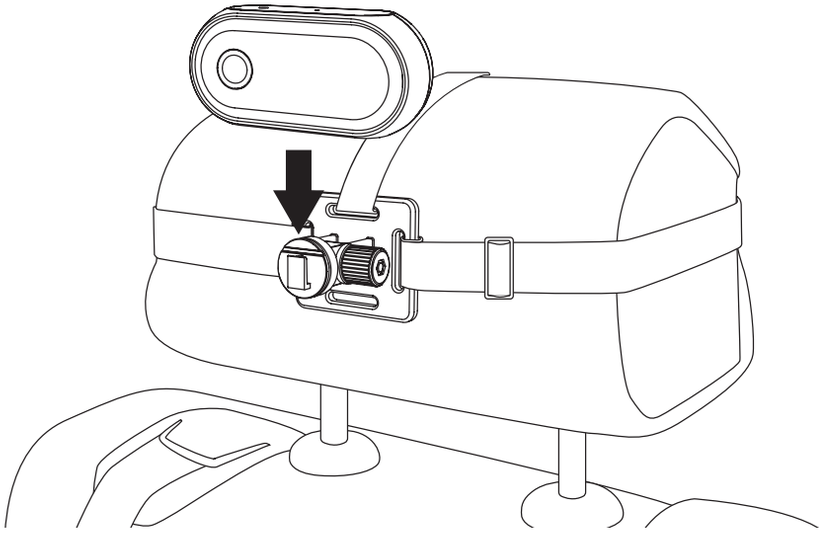

Option 2: Spring Loaded Clamp

Attach the Spring Loaded Clamp mount onto the metal pole under your headrest, and then attach the camera to the mount. The rotating knob on the mount can be used to adjust the angle of the mount.

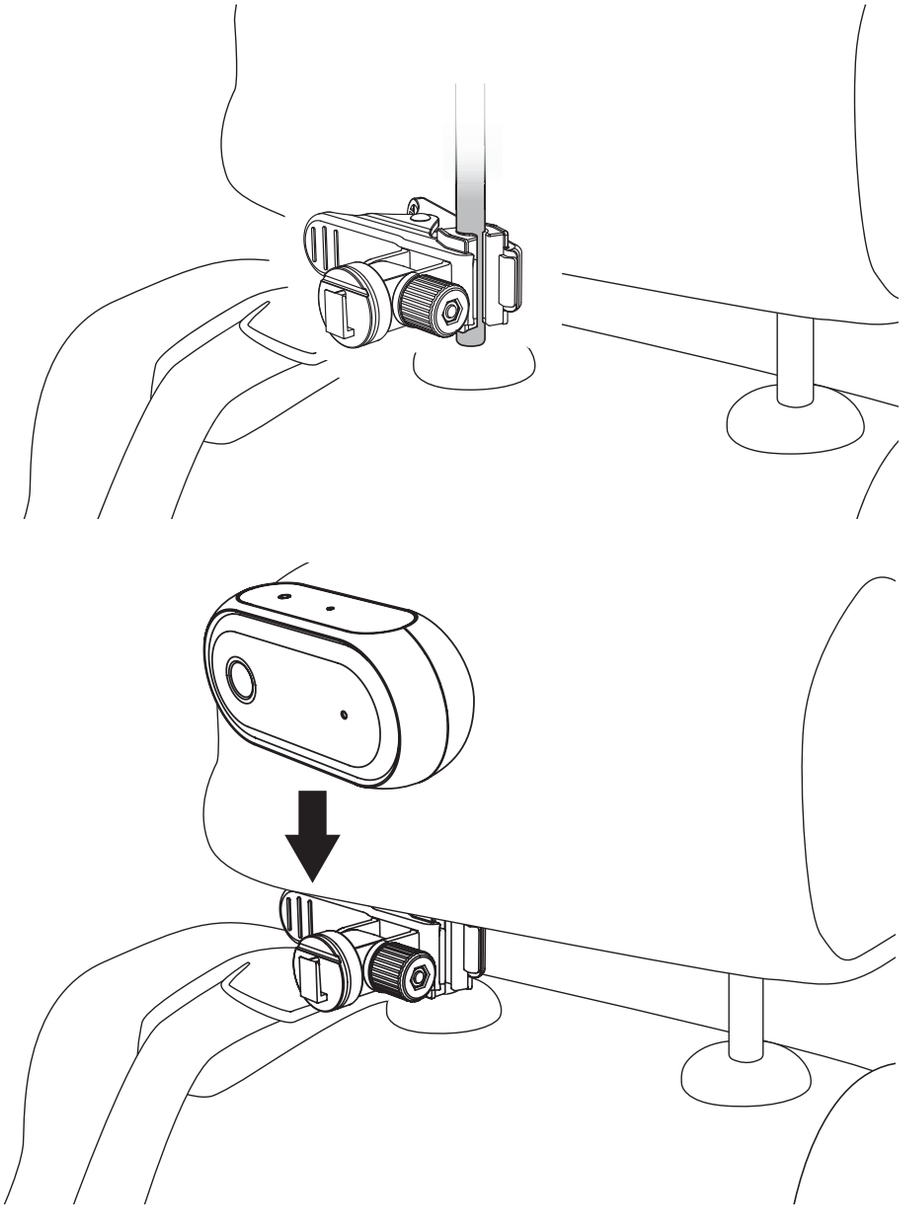

CONNECT TO POWER

Connect the camera to any USB port on your vehicle using the USB-C Power Cable included in the box. To ensure maximum safety, we recommend tucking the cable under the seat lining, the floor mat, or anything that'll prevent the cable from getting into your way. The camera will power on automatically every time you start your vehicle.

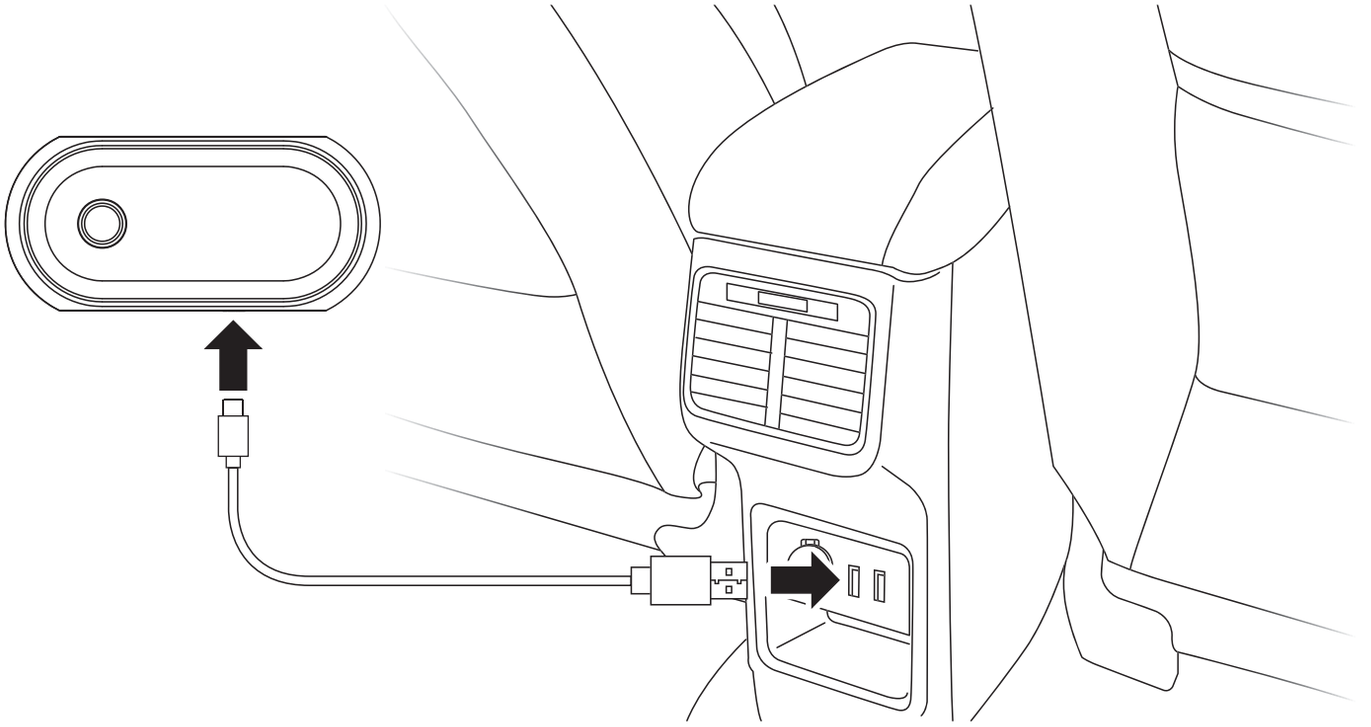

NOTES:

If your vehicle does not come with a USB port, you may use the 12/24V power socket ("cigarette lighter") as power source. (Adapter need to be purchased separately.)

For the camera to function stably, please make sure that the USB port on your vehicle provides at least 1A power supply.

USAGE PRECAUTIONS

Many vehicles provide constant power to the 12/24V outlet. In case the camera does not automatically power off when you shut down your vehicle, please unplug the camera from the power source so that it does not drain the power of your vehicle's battery.

DOWNLOADING THE APP

YADA Drive

With the YADA Drive APP, you'll be able to control the Car Baby Camera and record media files using your iOS or Android smart device. Scan the QR code to the right or search for "YADA Drive" via App Store/Google Play to download and install the APP.

Download on the App Store

Compatible with iPhone 4s and higher, iPad3, iPad Mini, iPad Air and higher, and iPod touch 5th Generation and higher. Requires iOS 9.0 or higher.

GET IT ON Google Play

Compatible with phones with Android™ 5.0 or higher.

APP SETUP

Auto-sync the Car Baby Camera with your smart device

1. Power on the Car Baby Camera, it will enter WiFi pairing mode automatically.

2. Launch the YADA Drive APP and click **BABY MONITOR**.

3. Select Car Baby Camera and click **Set Up Device**.

Android device

4. Click the ⚙ icon and then select the Pair Camera Icon.

5. When the APP finds "YADA_BBC01_1080P_XXXXXX", click **Connect**.

6. During first time use, you will be prompted to set up a PIN. Please keep the PIN handy for future use. To reset the PIN, please refer to the ⓘ APP's Info icon.

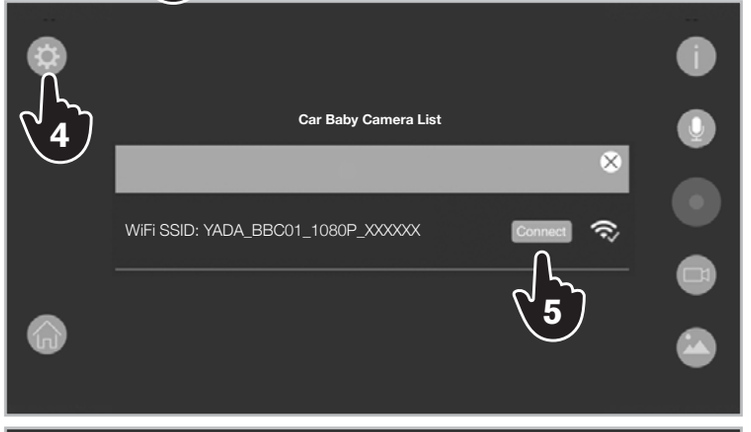

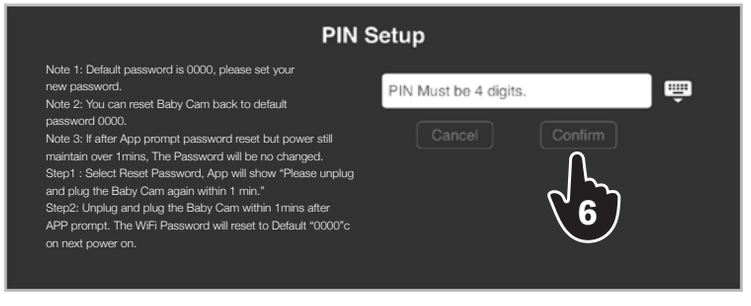

8. You should now be able to see the live view of the Car Baby Camera.

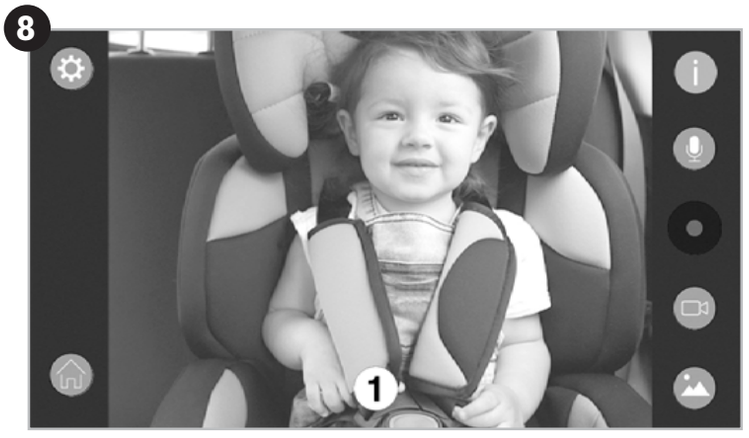

iOS device (Follow steps 1-3 from previous page's instructions)

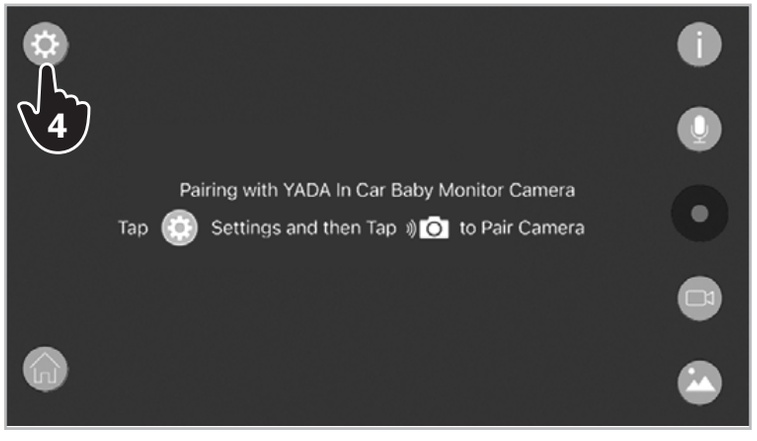

4. Click the icon and then select the Pair Camera Icon.

5. Click **Settings** on the APP permissions setting page to go into your device's WiFi setting page.

6. Connect to "YADA_BBC01_1080P_XXXXXX" and enter the default password "12345678" and click **Join**.

7. Return to the YADA Drive APP.

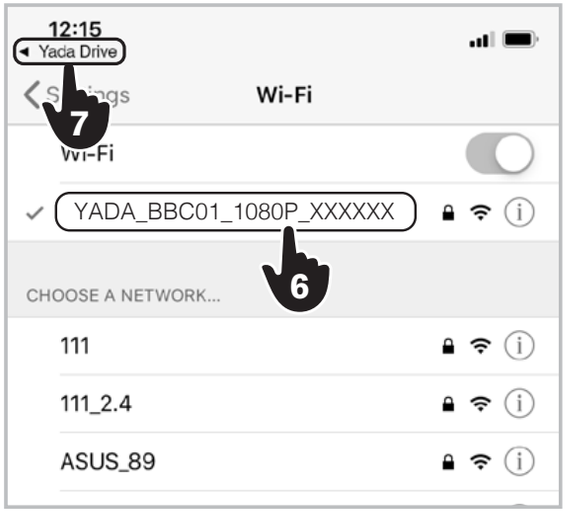

8. During first time use, you will be prompted to set up a PIN. Please keep the PIN handy for future use. To reset the PIN, please refer to the APP's Info icon.

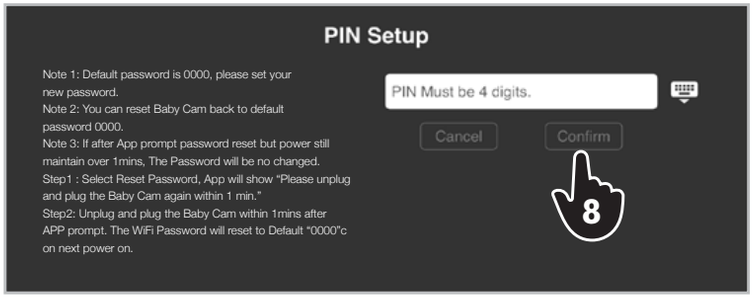

9. You should now be able to see the live view of the Car Baby Camera.

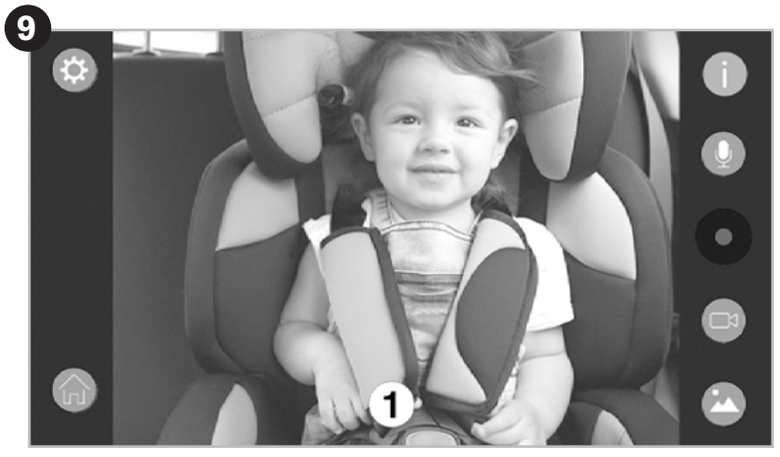

NOTE: For more on-screen instructions, please click on the APP's Info Icon.

SAFETY INFORMATION

IMPORTANT SAFETY INSTRUCTIONS

1. **SAVE THESE INSTRUCTIONS** – This manual contains important safety and operating instructions.
2. Before using the product, read all instructions and cautionary markings.
3. Do not expose Car Baby Camera to rain, moisture, or snow.
4. Use of an attachment not recommended or sold by the product manufacturer may result in a risk of fire, electric shock, or injury to persons.
5. To reduce risk of damage to Car Baby Camera and cable, pull by Car Baby Camera rather than cable when disconnecting from USB port.

6. Make sure cable is carefully secured so that it will not be stepped on, tripped over, or otherwise subjected to damage or stress.
7. Do not operate Car Baby Camera with damaged cable – replace it immediately.
8. Do not operate Car Baby Camera if it has received a sharp blow, been dropped, or otherwise damaged in any way; take it to a qualified serviceperson.
9. Do not disassemble Car Baby Camera; take it to a qualified serviceperson when service or repair is required. Incorrect reassembly may result in a risk of electric shock or fire.
10. To reduce risk of electric shock, unplug Car Baby Camera before attempting any maintenance or cleaning. Turning off controls will not reduce this risk.

WARNING: A failure to read and follow these warnings and instructions may result in a serious accident, including damaged property or a serious injury, including loss of life.

- Adhere to all applicable traffic laws and motor vehicle regulations applicable to the device.
- Consult local laws and regulations for any restrictions on installation or use.
- Never allow children to play with the device. Small parts may be a choking hazard.
- If the temperature changes rapidly, the system may not operate normally.
- When strong light directly enters a camera, objects may not be displayed clearly.
- The colors of objects on the Car Baby Camera with APP Controlled may differ from those of the actual object.

- Do not use alcohol or thinner to clean the camera. This will cause discoloration. To clean the camera, wipe with a clean cloth dampened with mild cleaner diluted with water and then wipe with a dry cloth.

The Car Baby Camera is a system that is intended as an aid to monitor your baby while you are driving by allowing for quick glances at your baby while facing forward and without having to turn around and take your eyes off the road. It is not a substitute for responsible and proper adult supervision of children and should not be used as such.

Make sure that at no time does the Car Baby Camera or cables come in any contact or within reach of your baby.

This product will only provide images of items that are within the field of view of the camera. Thus, it is imperative that the camera should be kept clean and unobstructed. And should be mounted so that its field of view includes the entire area around the car seat.

The Car Baby Camera is made for use inside your vehicle. It is not meant for outdoor use. Do not get any of the Car Baby Camera components wet or exposed to moisture. At any time, do not attempt to disassemble the camera, or use different cables other than the ones provided with the original packaging.

The car seat should be correctly mounted in the car as required by law. There is no need to have the baby in the car while the Car Baby Camera is installed, and should be kept away as a precaution.

Before mounting the camera, check your local laws and regulations

regarding where the device is legally allowed to be mounted.

The camera should be mounted securely as instructed. At no time should it be loose or not fixed to the headrest.

DO NOT attach the camera to the car seat. DO NOT lay the camera loosely in the car seat.

This system is powered by plugging the USB-C power cable provided in this package into your vehicle's USB media port. Do not attempt to use any other power source or cables to operate this system.

The Car Baby Camera is not a toy. At no time should children be allowed to play with it. It should only be operated by adults who have read the safety and operating instructions listed in this manual.

This product contains small parts. Adult installation is required. Exercise care when unpacking and assembling the product.

⚠ WARNING: Strangulation Hazard

Children have STRANGLED in cords. Keep the unit and cord more than 3 feet from the crib or car seat and out of baby's reach. NEVER place camera or cords within the crib or car seat. Secure the cord more than 3 feet away from the baby's reach.

MAINTENANCE & WARRANTY

Cleaning

- If dirt, rain water droplets, snow or mud adhere to the camera lens, rinse with water and wipe with a dry cloth.
- Do not use alcohol or thinner to clean the camera. This will cause discoloration. To clean the camera, wipe with a clean cloth dampened with mild cleaner diluted with water and then wipe with a dry cloth.

Warranty

YADA LIMITED WARRANTY

YADA warrants, to the original purchaser, that its products are free from defects in material and workmanship for 1 year from the date of original purchase. Where permitted by law, YADA's liability shall be limited to that set forth in this limited express warranty. This limited express warranty shall be the exclusive remedy of the purchaser and YADA makes no other warranty of any kind aside from the limited express warranty stated above.

NOTE: Warranty only applies for North American customers of purchases made in North America.

CONDITIONS OF WARRANTY

If during the 1 year warranty period your new product is found to be defective, YADA will repair such defect, or replace the product, without charge for parts or labor subject to the following conditions:

1. All repairs must be performed by YADA.
2. All warranty claims must be accompanied by a copy of the sales receipt or bill of sale.

3. The equipment must not have been altered or damaged through negligence, accident, improper operation, or failure to follow the product instructions for installation, use, or care.
4. The replacement of parts is excluded from the warranty when replacement is necessary due to normal wear and tear.
5. Repair or replacement parts supplied by YADA under this warranty are protected only for the unexpired portion of the original warranty.
6. This is a “repair or replace” warranty only, and does not cover the costs incurred for the installation, removal or reinstallation of the product, or damage to any mobile phone device or vehicle.

OWNER’S RESPONSIBILITIES:

YADA will make every effort to provide warranty service within a reasonable period of time. SHOULD YOU HAVE ANY QUESTIONS ABOUT SERVICE RECEIVED OR IF YOU WOULD LIKE ASSISTANCE IN OBTAINING SERVICE, PLEASE CALL TOLL FREE 1.866.294.9244 DURING REGULAR BUSINESS HOURS MONDAY THROUGH FRIDAY 8:00 AM TO 5:00PM.

NOTE: Toll Free # is for North America Customers ONLY. See Customer service section for customer contact numbers for other regions/offices.

For customer service and technical support, please call us at 1.866.294.9244. If at that time it is determined that a replacement unit is needed, the support representative will issue a Return Authorization and instruct on how to get a new unit.
YADA makes no other warranty of any kind aside from the limited express warranty stated herein.

DISCLAIMER OF WARRANTIES, INCLUDING WARRANTY OF MERCHANTABILITY AND WARRANTY OF FITNESS FOR PARTICULAR

PURPOSE: EXCEPT AS SPECIFICALLY SET FORTH HEREIN, NO WARRANTY OR REPRESENTATION, EXPRESS OR IMPLIES, IS MADE AS TO THE CAR BABY CAMERA WITH APP CONTROLLED. EXCEPT AS EXPRESSLY SET FORTH HEREIN, YADA AND/OR ITS AFFILIATES EXPRESSLY DISCLAIMS, WITHOUT LIMITATION, ANY STATUTORY WARRANTIES AND ALL IMPLIED WARRANTIES, INCLUDING ANY IMPLIED WARRANTY OF MERCHANTABILITY OR FITNESS FOR A PARTICULAR PURPOSE.

YADA and/or its affiliates do not guarantee or promise that the user of Car Baby Camera with APP Controlled will not be in an accident or otherwise not collide with an object and/or person. Our Car Baby Camera with APP Controlled is not intended in any way to be a substitute for careful and cautious driving or for the consistent adherence to all applicable traffic laws and motor vehicle safety regulations.

YADA and/or its affiliates are not responsible for a user's intended or actual use of the Car Baby Camera with APP Controlled. In no event shall YADA and/or its affiliates have any liability for any losses (whether direct or indirect, in contract, tort or otherwise) incurred in connection with the Car Baby Camera with APP Controlled, including but not limited to damaged property, personal injury and/or loss of life. Neither shall YADA and/or its affiliates have any liability for any decision, action or inaction taken by any person in reliance on the Car Baby Camera with APP Controlled, or for any delays, inaccuracies and /or errors in connection with the Car Baby Camera with APP Controlled and its functioning.

YADA and/or its affiliates shall have no responsibility or liability for damage and/or injury resulting from accidents occurring with vehicles having the installed, and YADA and/or its affiliates, the manufacturer, distributor

and seller shall not be liable for any injury, loss or damage, incidental or consequential, arising out of the use or intended use of the product.

GENERAL INFORMATION

Customer Service/Contact

IF YOU ARE EXPERIENCING ANY ISSUES WITH THE PRODUCT DURING OPERATION, DO NOT RETURN THE PRODUCT TO THE STORE. CONTACT YADA DIRECTLY FOR INSTRUCTIONS ON HOW TO RETURN/ EXCHANGE THE PRODUCT.

FCC Compliance Statement:
This device complies with Part 15 of the FCC rules. Operation is subject to the following two conditions: (1) This device may not cause harmful interference, and (2) this device must accept any interference received, including interference that may cause undesired operation.
WARNING: Changes or modifications to this unit not expressly approved by the party responsible for compliance could void the user's authority to operate the equipment. The manufacturer is not responsible for any radio or TV interference caused by unauthorized modifications or change to this equipment. Such modifications or change could void the user's authority to operate the equipment.

NOTE: This equipment has been tested and found to comply with the limits for a Class B digital device, pursuant to part 15 of the FCC Rules. These limits are designed to provide reasonable protection against harmful interference in a residential installation. This equipment generates, uses and can radiate radio frequency energy and, if not installed and used in accordance with the instructions, may cause harmful interference to radio

communications. However, there is no guarantee that interference will not occur in a particular installation. If this equipment does cause harmful interference to radio or television reception, which can be determined by turning the equipment off and on, the user is encouraged to try to correct the interference by one or more of the following measures:

- Reorient or relocate the receiving antenna.
- Increase the separation between the equipment and the receiver.
- Connect the equipment into an outlet on a circuit different from that to which the receiver is connected.
- Consult the dealer or an experienced radio/TV technician for help.

This equipment complies with FCC RF radiation exposure limits set forth for an uncontrolled environment. In order to avoid the possibility of exceeding the FCC radio frequency exposure limits, human proximity to the antenna shall not be less than 20cm during normal operation.

⚠ **WARNING:** This product can expose you to chemicals including Di(2-ethylhexyl)phthalate (DEHP) and Diisononyl Phthalate (DINP), which are known to the State of California to cause cancer and birth defects or other reproductive harm.
For more information go to www.P65Warnings.ca.gov.

Car Baby Camera with APP Controlled
BT532925
Responsible Party:
YADA
2975 Red Hill Ave., Ste. 100, Costa Mesa, CA 92626
Tel: 1.866.294.9244

Android is a trademark of Google Inc.
iPhone, iPad and iPod touch are trademarks of Apple Inc.

YADA
CONNECTIVITY FOR LIFE

Product code / Code de produit / Código del producto : BT532925

Register this product within 30 days of purchase to receive one **(1) additional year** of warranty coverage (beyond the standard 1-year warranty), along with special product offers and announcements.

Enregistrez ce produit dans les 30 jours suivant l'achat pour recevoir une couverture **supplémentaire de 1 AN** (au-delà de la garantie standard d'un an), ainsi que des offres et des annonces spéciales.

Registre este producto dentro de los 30 días siguientes a la compra para recibir un **(1) año adicional** de cobertura de garantía (más allá de la garantía estándar de un año), junto con ofertas de productos y anuncios especiales.

www.letsyada.com/register **@letsyada**

STOP
ARRÊT
DETÉNGASE

Please contact our customer service before returning this product to the store. Our friendly representatives are happy to help with any questions or concerns you have.

Veuillez communiquer avec notre service à la clientèle avant de retourner le produit au magasin. Nos représentants se feront un plaisir de q assister pour toute question ou préoccupation.

Póngase en contacto con nuestro servicio a clientes antes de regresar este producto a la tienda. A nuestros amables representantes les dará mucho gusto ayudarle con cualquier pregunta o inquietud que tenga.

Mon-Fri, 8am-5pm PST / Lundi au vendredi, 8h à 17h HNP / Lun-vie, 8 a. m. a 5 p. m. Hora del Pacífico
customercare@horizon-brands.com / 1.866.294.9244

YADA
CONNECTIVITY FOR LIFE

CONNECT WITH US | @letsyada

2975 Red Hill Ave., Ste. 100, Costa Mesa, CA 92626
1.866.294.9244 | customercare@horizon-brands.com
© 2022 ADC Solutions Auto, LLC.

www.letsyada.com

ML-532925_V1