WIRING HARNESS

LM534402

Care & Use Instructions

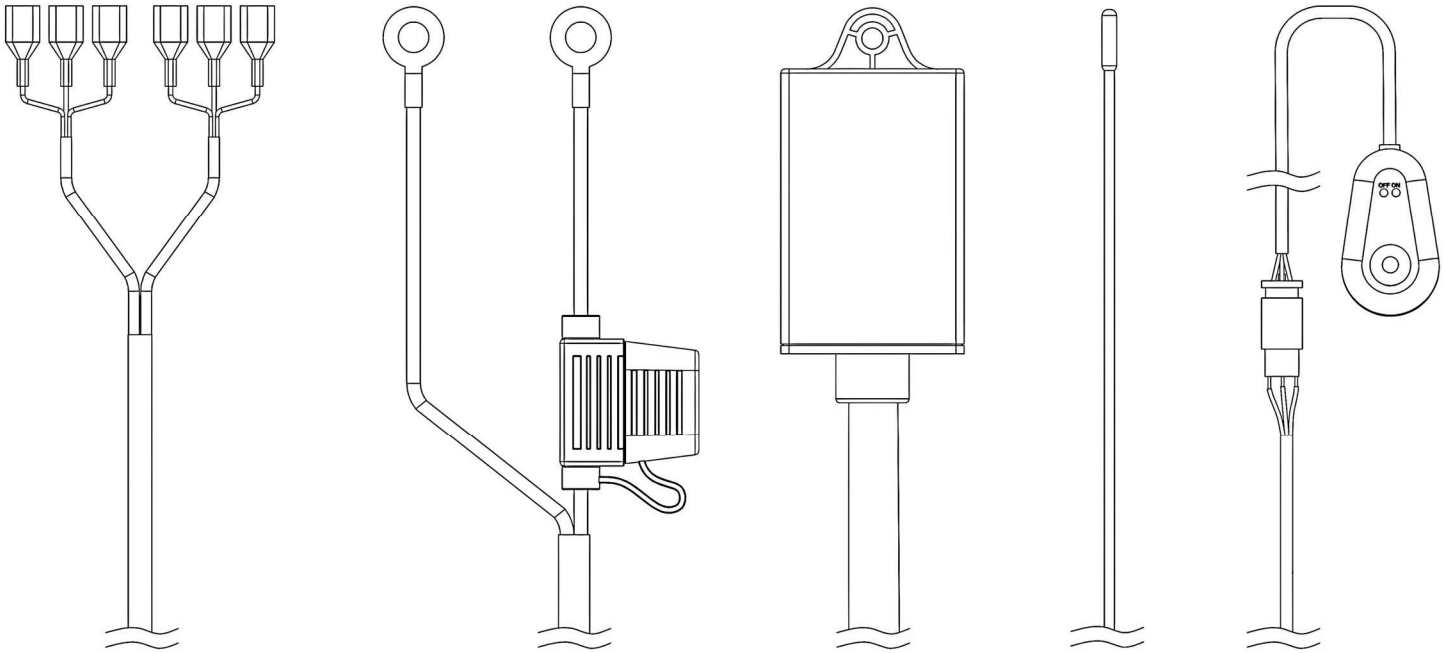

Important, retain for future reference:
Read carefully

For more detailed instructions, please scan the QR code above
to access the complete user manual and installation video.

WARNINGS

IMPORTANT SAFETY INSTRUCTIONS

- SAVE THESE INSTRUCTIONS – This manual contains important safety and operating instructions.
- Before using this product, read all instructions and cautionary markings.
- Do not expose the bare wires to rain, moisture, or snow.
- Use of an attachment not recommended or sold by the manufacturer may result in a risk of fire, electric shock, or injury to persons.
- Do not operate with damaged Wiring Harness – replace it immediately.
- Do not operate the Wiring Harness if it has received a sharp blow, been dropped, or otherwise damaged in any way; take it to a qualified serviceperson.
- Do not disassemble the Wiring Harness; take it to a qualified serviceperson when service or repair is required. Incorrect reassembly may result in a risk of electric shock or fire.
- To reduce risk of electric shock, disconnect the Wiring Harness before attempting any maintenance or cleaning. Turning off controls will not reduce this risk.

WARNING: FAILURE TO FOLLOW THESE INSTRUCTIONS WHEN INSTALLING THE WIRING HARNESS MAY CAUSE ELECTRICAL PROBLEMS IN YOUR VEHICLE WHICH COULD CAUSE DAMAGE, ELECTRICAL SYSTEM DAMAGE, FIRE, ELECTRICAL SHOCK, PERSONAL INJURY OR DEATH.

CAUTIONS

1. Do not install or use product if it, in any way, impairs the safe operation of your vehicle.
2. Follow manufacturer's instructions to ensure the product is properly and safely installed.
3. Check your state or provincial laws before installing. Vehicle owner must comply with all applicable laws.
4. The Manufacturer and Seller are not responsible or liable for consequential, incidental, or indirect damages, whether to person or property, resulting from the installation or improper use of this product.

⚠ **WARNING**: This product can expose you to chemicals including Di(2-ethylhexyl)phthalate (DEHP) and Diisononyl Phthalate (DINP), which are known to the State of California to cause cancer and birth defects or other reproductive harm. For more information go to www.P65Warnings.ca.gov.

SPECIFICATIONS

Control:	Switch & RF Remote Control
Volts:	12V DC
Fuse:	15A In-Line
Battery For Remote Control:	3V DC CR2032
Wire Length:	
Light Control Switch To Controller:	112.2” / 2.85m
Spade Terminals To Controller:	137.8” / 3.5m
Ring Terminals To Controller:	19.69” / 0.5m

PACKAGE INCLUDES

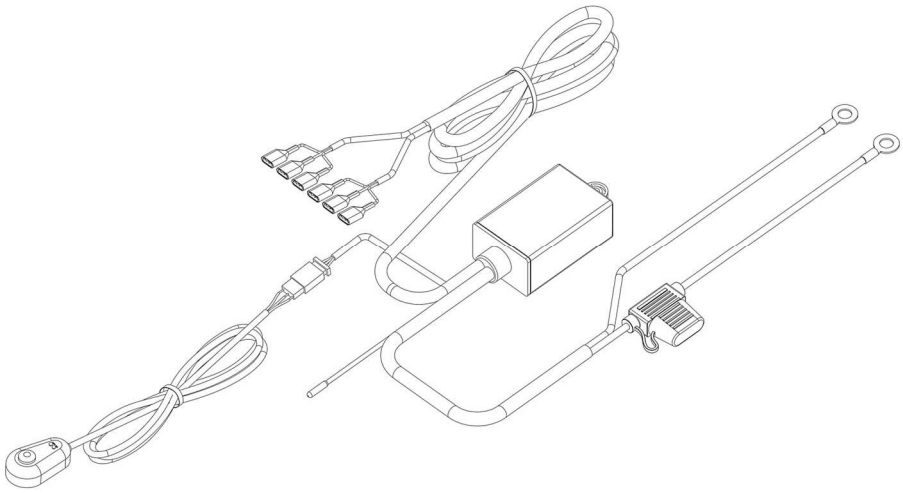

1 x 2-Light Wiring Harness
(In-line Switch and 15A Fuse)

1 x Keychain Remote Control

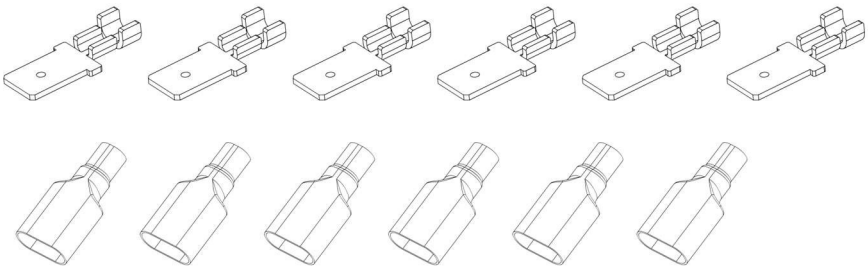

6 x Spade Terminals
(Connectors and Sleeves)

RECOMMENDED TOOLS & MATERIALS (NOT INCLUDED)

- Crimp tool
- Non-conductive electrical tape
- Cable ties
- Wire loom
- Grommets (if you need to drill firewall)

BEFORE INSTALLATION

1. Electrical Ratings

    - This wiring harness has specific voltage and amperage ratings for power input. DO NOT EXCEED THESE RATINGS. Ensure this wiring harness is installed in a properly functioning vehicle with a properly functioning electrical system.

    - The user is responsible for connecting compatible 12V accessories to this wiring harness. This wiring harness is intended to connect power to 12V DC automotive accessories that are within the amperage ratings provided. It is essential that ratings are followed. Do not connect a 12V accessory that is malfunctioning or damaged to this wiring harness.

2. Installation Location

    - Before permanently securing the wiring harness to the vehicle, ensure the wire lengths to the 12V accessory(ies) are sufficient. STAY AWAY FROM HEAT-GENERATING SOURCES AND MOVING PARTS. Also, ensure the light control switch functionality to the 12V accessory(ies) is operating properly before permanently securing to vehicle. Lighting and other 12V accessories should not be installed in a position that hinders the driver's visibility of the road, or other drivers.

WIRING

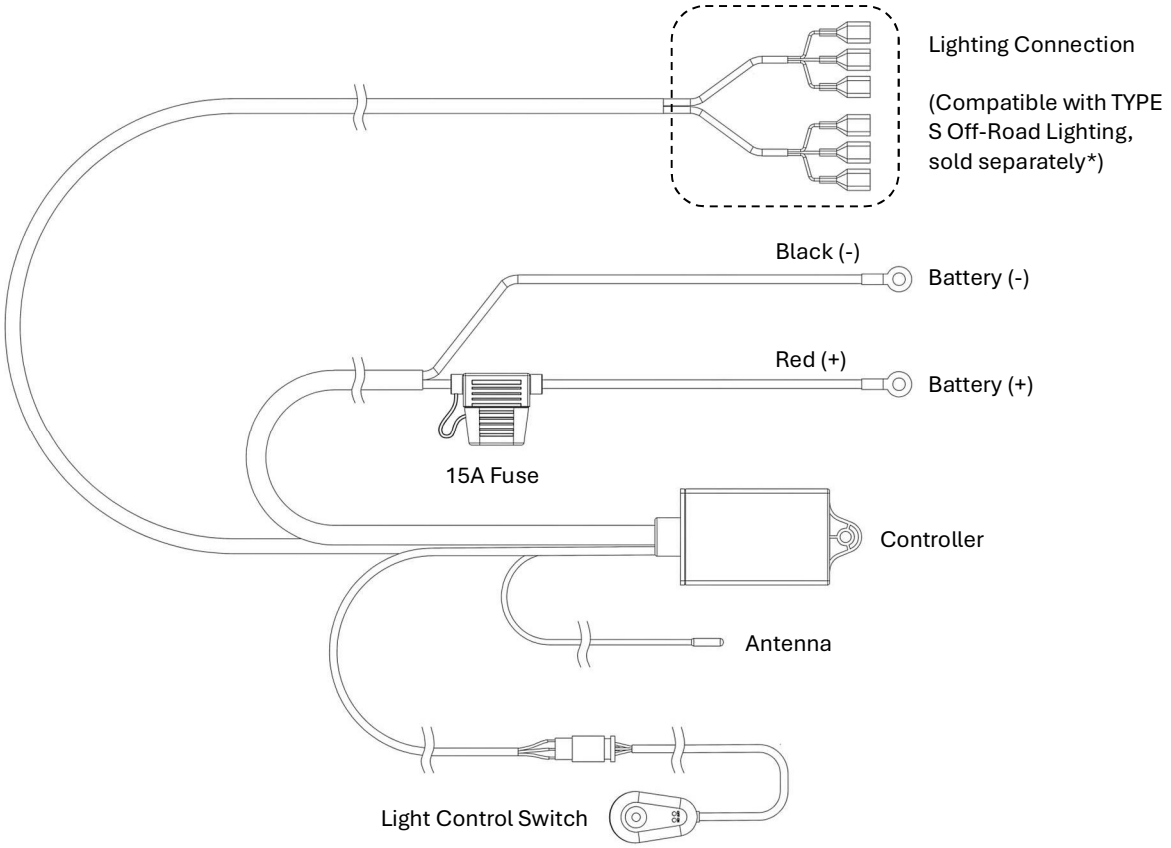

1. Draw a diagram of where you want to install the lights, where the wires will run, where the switch and controller will be installed.

   - This will help you determine the amount of wiring you will need. Measure at least twice.

   - It will also help you determine where to permanently mount switch, controller, or power hub.

2. With the engine cool, test fit the wiring harness to ensure proper lengths for wiring to lights.

3. Connect the lights to the output sets. There are two options depending on your setup:

   - If you are connecting two lights to one output set, insert the positive (+) wire from the first light into the **RED** (+) spade terminal. Insert the positive (+) wire from the second light into the **WHITE** (+) spade terminal. Both lights' negative (-) wires should be connected to the **BLACK** (-) spade terminal. Use a crimp tool to secure the wires.

   - Alternatively, if you are using a dual-mode light on one output set, insert the positive (+) wires from the light separately into the **RED** (+) and **WHITE** (+) spade terminals. Insert the adjacent negative (-) wire into the **BLACK** (-) spade terminal. Use a crimp tool to secure the wires.

   NOTE: Use the provided connectors and sleeves for lighting connection if necessary.

4. Once all lights are connected to the wiring harness, test light functionality.

5. If lights are functioning properly, it is now time to ensure the switch and controller are routed appropriately.

   NOTE: The in-line switch and controller will likely need to be secured and installed beyond the firewall inside the vehicle's interior. Look for a grommet on the firewall or in the upper part of the driver and passenger footwells. Reference your vehicle's manual or other resources to determine how to best gain access through the firewall.

6. Mount the switch.

7. Power on your vehicle and test the lights.

8. If everything is working properly, turn off your vehicle and secure any loose wires.

   NOTE: Cable ties and wire loom are recommended for cable management and protection. Cable ties and wire loom are not included.

*__NOTE__: Visit www.typesauto.com for more information on where you can purchase TYPE S Off-Road Lighting.

CONTROLLING YOUR LIGHTS WITH THE REMOTE

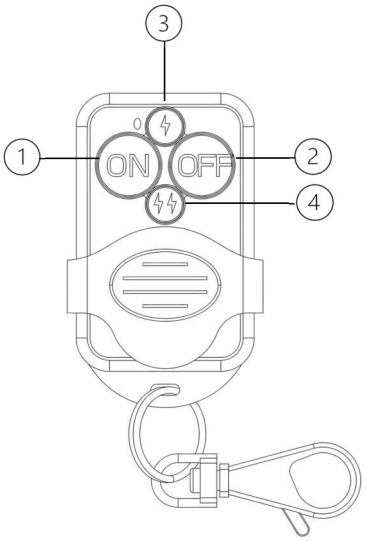

Remote Control

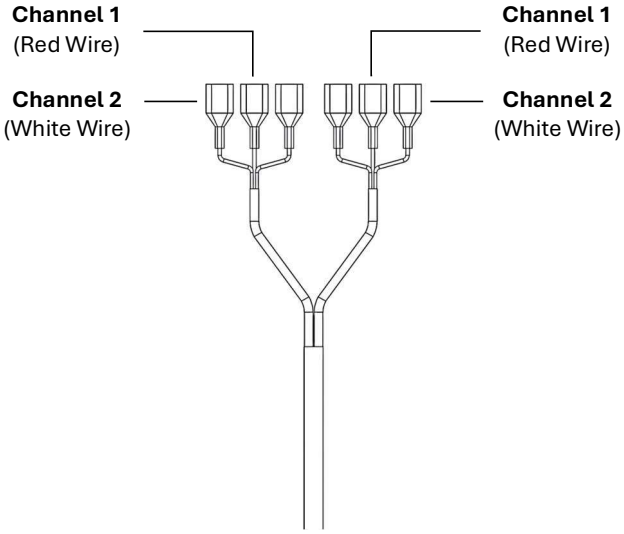

Wiring Harness Output Sets

1. **ON Button**

   Press ON once to activate the lights on the first channels of the output sets. Press again to switch to the second channels, and press once more to turn on both channels.

2. **OFF Button**

   Press OFF once to turn off all channels. When you turn it back on, the wiring harness will resume in the same mode you last used.

3. **Slow Strobe Button**

   Press once to enable slow strobe mode.

4. **Fast Strobe Button**

   Press once to enable fast strobe mode.

OPTIONAL ACCESSORIES

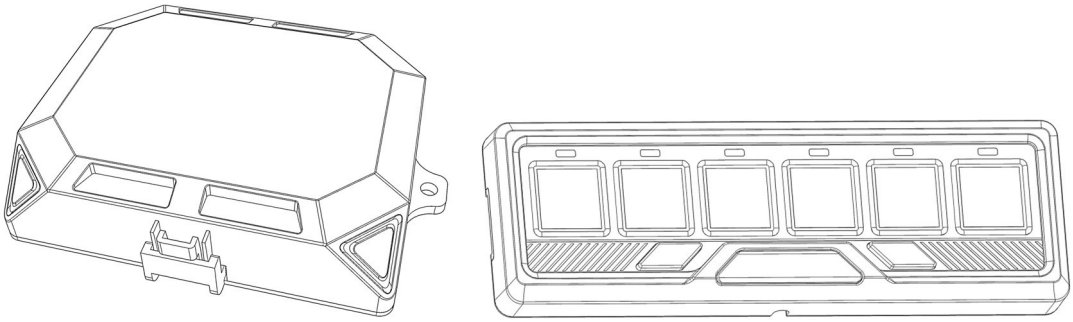

LYNX 6
6-Switch Control Panel & Power Hub
(LM534403, sold separately)

Visit www.typesauto.com for more information on where you can purchase additional accessories.

WARRANTY

TYPE S
LIMITED WARRANTY

TYPE S warrants, to the original purchaser, that its products are free from defects in material and workmanship for 2 years from the date of original purchase. Where permitted by law, TYPE S's liability shall be limited to that set forth in this limited express warranty. This limited express warranty shall be the exclusive remedy of the purchaser and TYPE S makes no other warranty of any kind aside from the limited express warranty stated above.

NOTE: Warranty only applies for North American customers of purchases made in North America.

CONDITIONS OF WARRANTY

If during the 2-year warranty period your new product is found to be defective, TYPE S will repair such defect, or replace the product, without charge for parts or labor subject to the following conditions:

1. All repairs must be performed by TYPE S.

2. All warranty claims must be accompanied by a copy of the sales receipt or bill of sale.

3. The equipment must not have been altered or damaged through negligence, accident, improper operation, or failure to follow the product instructions for installation, use, or care.

4. The replacement of parts is excluded from the warranty when replacement is necessary due to normal wear and tear.

5. Repair or replacement parts supplied by TYPE S under this warranty are protected only for the unexpired portion of the original warranty.

6. This is a "repair or replace" warranty only, and does not cover the costs incurred for the installation, removal or reinstallation of the product, or damage to any mobile phone device or vehicle.

OWNER'S RESPONSIBILITIES:

TYPE S will make every effort to provide warranty service within a reasonable period of time. SHOULD YOU HAVE ANY QUESTIONS ABOUT SERVICE RECEIVED OR IF YOU WOULD LIKE ASSISTANCE IN OBTAINING SERVICE, PLEASE CALL TOLL FREE 1.866.294.9244 DURING REGULAR BUSINESS HOURS MONDAY THROUGH FRIDAY 8:00 AM TO 5:00PM.

NOTE: Toll Free # is for North America Customers ONLY. See Customer service section for customer contact numbers for other regions/offices.

For customer service and technical support, please call us at 1.866.294.9244. If at that time it is determined that a replacement unit is needed, the support representative will issue a Return Authorization and instruct on how to get a new unit. TYPE S makes no other warranty of any kind aside from the limited express warranty stated herein.

DISCLAIMER OF WARRANTIES, INCLUDING WARRANTY OF MERCHANTABILITY AND WARRANTY OF FITNESS FOR PARTICULAR PURPOSE: EXCEPT AS SPECIFICALLY SET FORTH HEREIN, NO WARRANTY OR REPRESENTATION, EXPRESS OR IMPLIES, IS MADE AS TO THE WIRING HARNESS. EXCEPT AS EXPRESSLY SET FORTH HEREIN, TYPE S AND/OR ITS AFFILIATES EXPRESSLY DISCLAIMS, WITHOUT LIMITATION, ANY STATUTORY WARRANTIES AND ALL IMPLIED WARRANTIES, INCLUDING ANY IMPLIED WARRANTY OF MERCHANTABILITY OR FITNESS FOR A PARTICULAR PURPOSE.

TYPE S and/or its affiliates are not responsible for a user's intended or actual use of the Wiring Harness. In no event shall TYPE S and/or its affiliates have any liability for any losses (whether direct or indirect, in contract, tort or otherwise) incurred in connection with the Wiring Harness, including but not limited to damaged property, personal injury and/or loss of life. Neither shall TYPE S and/or its affiliates have any liability for any decision, action taken based on relying on the stability or performance of the Wiring Harness. TYPE S and/or its affiliates, the manufacturer, distributor and seller shall not be liable for any injury, loss or damage, incidental or consequential, arising out of the use or intended use of the product.

FCC COMPLIANCE STATEMENT:

This device complies with Part 15 of the FCC rules. Operation is subject to the following two conditions: (1) This device may not cause harmful interference, and (2) this device must accept any interference received, including interference that may cause undesired operation.

WARNING: Changes or modifications to this unit not expressly approved by the party responsible for compliance could void the user's authority to operate the equipment. The manufacturer is not responsible for any radio or TV interference caused by unauthorized modifications or change to this equipment. Such modifications or change could void the user's authority to operate the equipment.

NOTE: This equipment has been tested and found to comply with the limits for a Class B digital device, pursuant to part 15 of the FCC Rules. These limits are designed to provide reasonable protection against harmful interference in a residential installation. This equipment generates uses and can radiate radio frequency energy and, if not installed and used in accordance with the instructions, may cause harmful interference to radio communications. However, there is no guarantee that interference will not occur in a particular installation. If this equipment does cause harmful interference to radio or television reception, which can be determined by turning the equipment off and on, the user is encouraged to try to correct the interference by one or more of the following measures:

- Reorient or relocate the receiving antenna.
- Increase the separation between the equipment and receiver.
- Connect the equipment into an outlet on a circuit different from that to which the receiver is connected.
- Consult the dealer or an experienced radio/TV technician for help.

The device has been evaluated to meet general RF exposure requirement. The device can be used in portable exposure condition without restriction.

2-Light Wiring Harness
LM534402
Responsible Party:
TYPE S
2975 Red Hill Ave., Ste. 100,
Costa Mesa, CA 92626, U.S.A.
Tel: 1.866.294.9244

Apple CarPlay is trademark of Apple Inc.
Android Auto is trademark of Google LLC.

A Horizon Brands Company
2975 Red Hill Ave., Ste. 100,
Costa Mesa, CA 92626, U.S.A.
1.866.294.9244 | info@typesauto.com
©2024 TYPE S. All rights reserved.
www.typesauto.com

Made in Cambodia

ML-534402_V1