WINPLUS®

# LED Utility Light

## with motion sensor

**ITM. / ART. 688836**
**Model:LM55970**

## CARE & USE INSTRUCTIONS

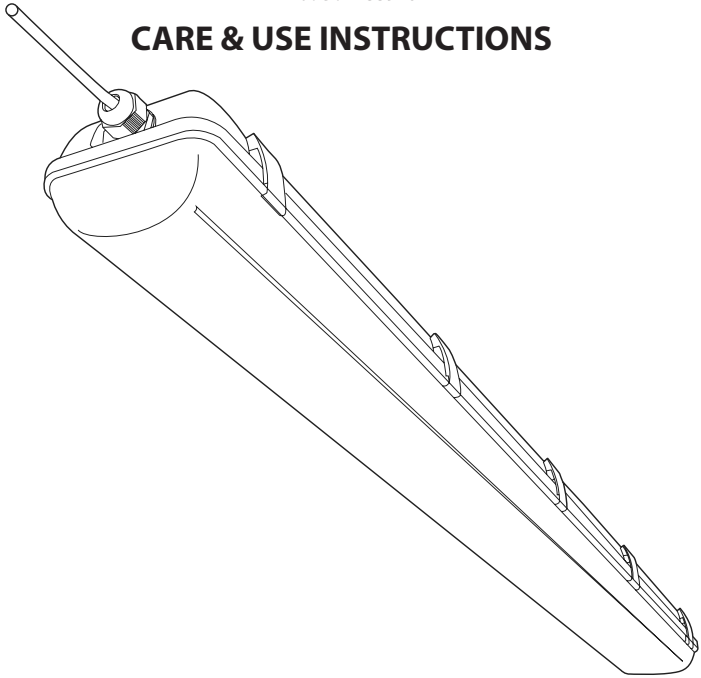

# IMPORTANT, RETAIN FOR FUTURE REFERENCE: READ CAREFULLY

For assistance with assembly or installation, parts and customer service, call us at 1-866-294-9244 (English), Mon to Fri 8 AM to 5PM Pacific Time, email us at info@winplususa.com

820 South Wanamaker Ave., Ontario, CA 91761, USA

www.winplus.com

This product is splash proof, suitable for use in home, office, warehouse, workshop, garage and covered wet locations (e.g. covered patios, covered porches, etc.). It is IP65 rated, which means it is protected against dust ingress and is able to withstand splashed water from any direction (does not include being fully submersed in water or deep snow). This product is ideal for lighting in wet areas, such as patio awnings and covered decks. it is also dust and wind proof.

This light is operated by a Smart Sensor Control. It will automatically switch on when motion is detected and will turn off au omatically when there is no movement in area for preset time.

## Important safety instructions:

Please read the following safety information before use.
To reduce risk of fi e, electric shock, or injury to persons:

- Grounded lights must be plugged into an outlet properly installed and grounded in accordance with all codes and ordinances.
- Improperly connecting the grounding wire can result in the risk of electric shock. Do not modify the power cord plug provided with the product. Never remove the grounding prong from the plug .
- Do not use the light if the power cord or plug is damaged. If damaged, have it repaired by a service facility before use. If the plug does not fit the outle , have a proper outlet installed by a qualified ele trician.
- Disconnect the power cord plug from the power source before making any adjustment or changing accessories. Do not attempt to install product while plugged in.
- Do not abuse the power cord. Never use the power cord to carry the light or pull the plug from an outlet. Keep the power cord away from heat, oil, sharp edges, or moving parts.
- Always refer to a qualified ele trician to remove the diffuser over. Unplug and allow to cool before changing the control setting.
- Store the product out of reach of children.
- Only use product in its intended location.
- Some metal parts in the product may have sharp edges. To prevent cuts, wear gloves when handling these parts.

## Warning:

- LED light output is strong enough to injure human eyes. Precautions must be taken to prevent looking directly at the LEDs without installing the diffuser ( over) for more than a few seconds.
- If the lighting fi ture is damaged, it shall be exclusively replaced by the manufacturer or the service agent or qualified person in o der to avoid a hazard.
- The warnings, precautions, and instructions discussed in this manual cannot cover all possible conditions and situations that may occur. The operator must understand that common sense and caution are factors which cannot be built into this product, but must be supplied by the operator.

# Package Contents:

Please layout all parts and read the instructions prior to installation.

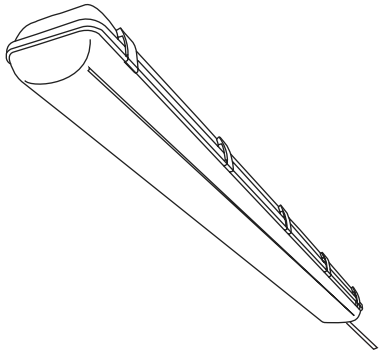

1 x LED Utility Light with 1.8 m / 6 ft power cable

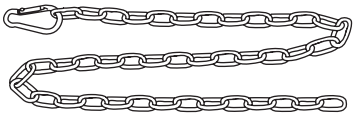

2 x 61 cm / 24 in zinc plated chains

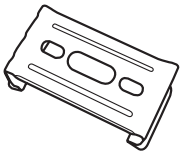

2 x Mounting brackets

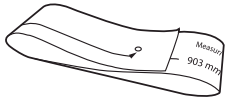


1 x Measuring template

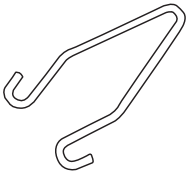

2 x Hanging hooks

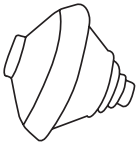

1 x Cable bushing

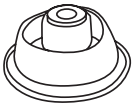

1 x Plastic cap

2 x Plastic anchors

2 x Drywall screws

2 x Wood screws

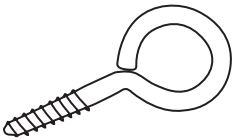

2 x Self-tapping screw hooks

**Tools Needed (not included)**

Philips head screwdriver

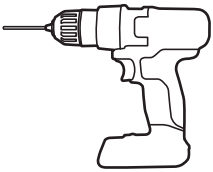

Drill, and 5/64 inch / 2 mm drill bit

Safety glasses

# Product Specifications:

1. Operating Voltage: 120V ac, 60 Hz
2. Wattage: 48 W / Stand-by mode: 1.5 W
3. Light Output: 3800 Lm
4. Color Temperature: 4000K
5. LED Life Cycles: up to 50,000 hrs
6. Dimensions: 126 cm / 49.4 in (L) x 12.7 cm / 5 in (W) x 8.8 cm / 3.46 in (H)
7. Weight: 2.6kg / 5.7lb
8. Waterproof rating: IP 65
9. Operating temperature: -4°F to 104°F / -20°C to 40°C

This product is ETL/cETL Listed

# Installation Procedures:

The product is intended to be connected to a plug and does not need to be switched on/off as it is ontrolled by the motion sensor. You do not need to disconnect from plug except for changing Smart Sensor Control setting.

After reconnecting power, please wait for 10 seconds to allow for the calibration time of sensor.

## Ceiling hanging with chains:

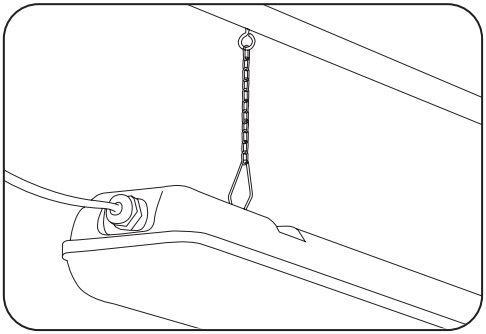

Final installed illustration

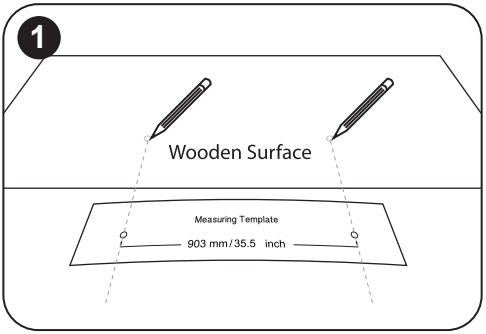


1. Select a suitable mounting location, and make sure the wooden surface is suitable for supporting the lighting fi ture. Use the measuring template to mark the hook locations on mounting surface.

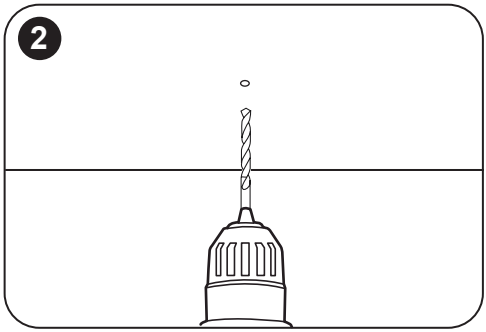


2. Wear safety glasses before drilling pilot holes. Drill two 5/64 inch / 2 mm diameter pilot holes.

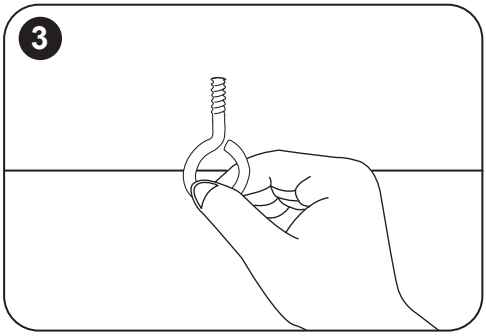


3. Screw in the self-tapping screw hook until only the curved eye is visible, no screw threads should be showing. Repeat for another hook.

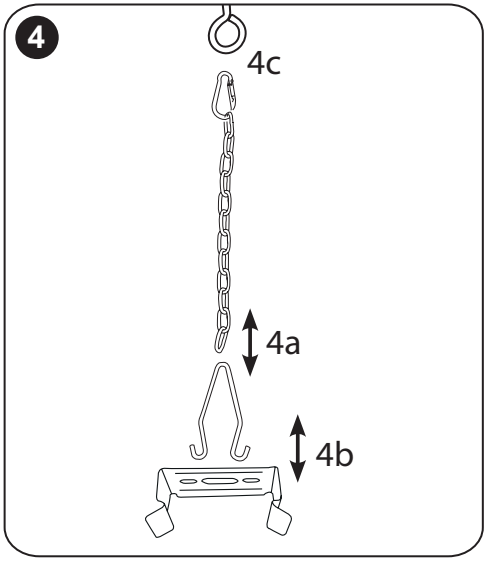


4a. Determine desired hanging height, slip wire hanging hook through the chain.

4b. Insert the hanging hook into the openings of mounting bracket. Repeat for another mounting bracket.

4c. Connect the chain onto the self-tapping screw hook, and repeat for another chain and hook.

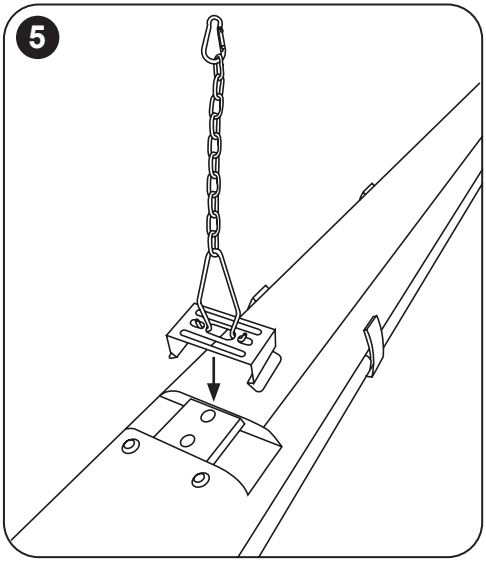


5. Clip mounting brackets onto the lighting fi ture.

## Ceiling flush mount:

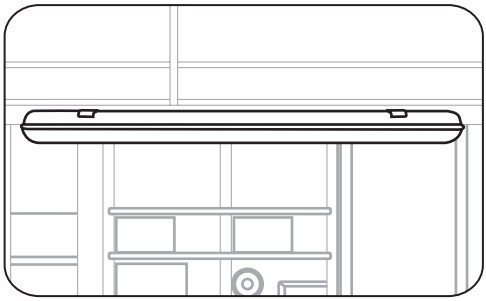

Final installed illustration

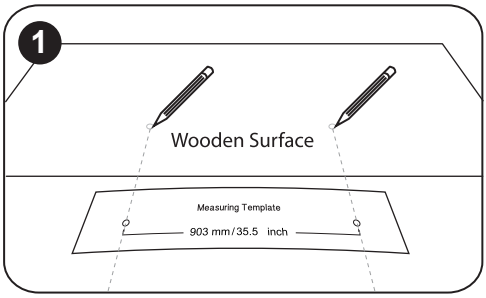


1. Select a suitable mounting location, and make sure the wooden surface is suitable for supporting the lighting fi ture. Use the measuring template to mark the hook locations on mounting surface.

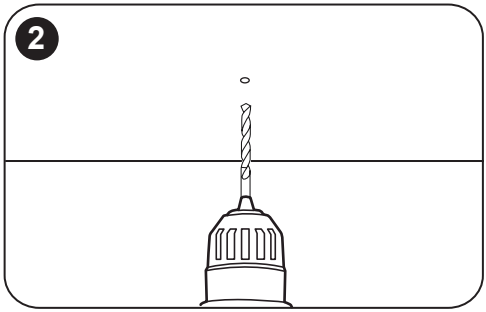


2. Wear safety glasses before drilling pilot holes. Drill two 5/64 inch / 2 mm diameter pilot holes.

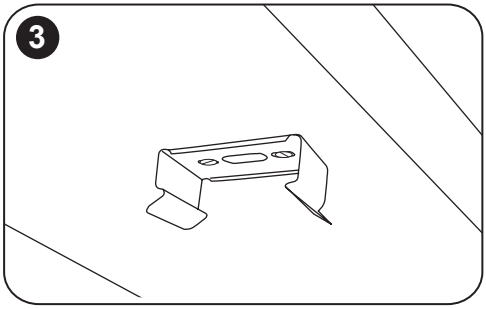


3. Screw on the mounting bracket with wood screws provided. Repeat for another mounting bracket.

Note: For concrete or drywall, you may use drywall screws along with plastic anchor instead of wood screws.

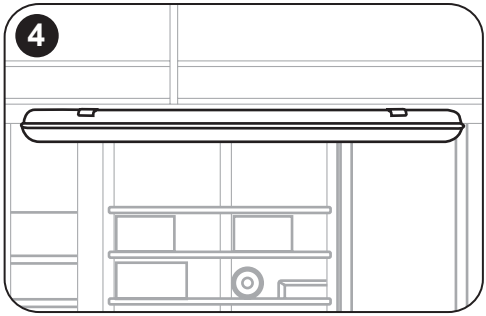


4. Clip mounting brackets onto the lighting fi ture.

## Ceiling hanging with hooks:

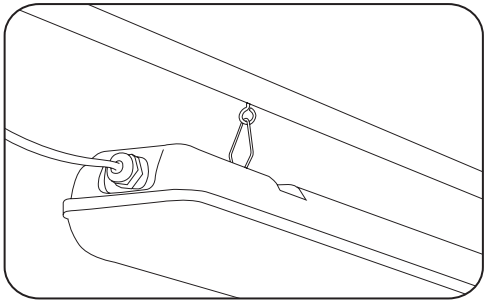

Final installed illustration

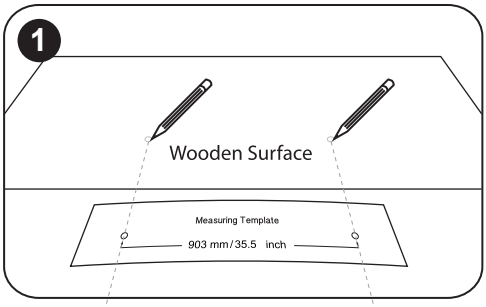


1. Select a suitable mounting location, and make sure the wooden surface is suitable for supporting the lighting fi ture. Use the measuring template to mark the hook locations on mounting surface.

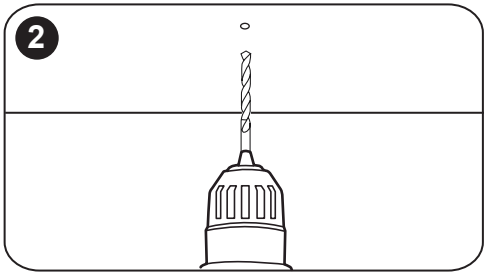


2. Wear safety glasses before drilling pilot holes. Drill two 5/64 inch / 2 mm diameter pilot holes.

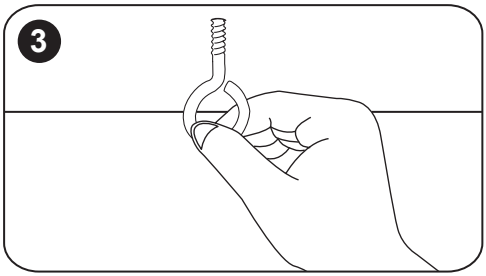


3. Screw in the self-tapping screw hook until only the curved eye is visible, no screw threads should be showing. Repeat for another hook.

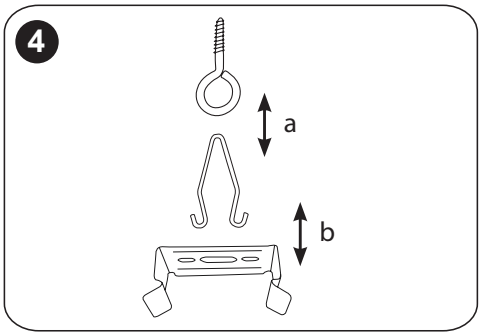


4a. Slip wire hanging hook into the self-tapping screw hook. Repeat for another hanging hook.

4b. Insert the hanging hook into the middle opening of mounting bracket. Repeat for another mounting bracket.

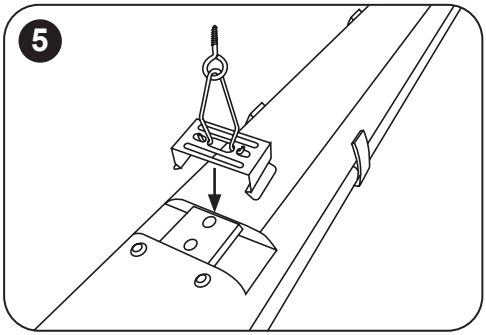


5. Clip mounting brackets onto the lighting fi ture.

# DIP switch control Setting and Operation:

Unplug and allow to cool before changing the control setting. By choosing the setting of DIP switch control, you can use the lighting fi ture in different locations. Please refer to the following instructions for choosing the DIP switch control setting.

**CAUTION:** Unplug the power cord from electrical outlet before adjusting the DIP switch control setting.

After unplugging the power cord, you can release all the retaining clips (A) and the four screws to remove the diffuser (cover).

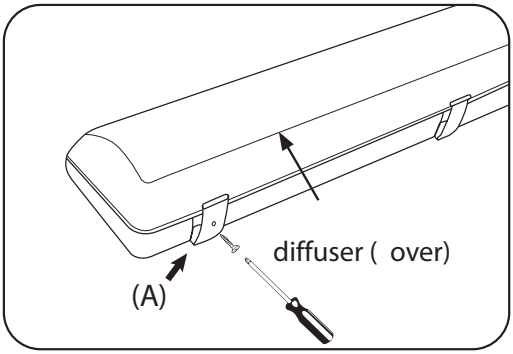


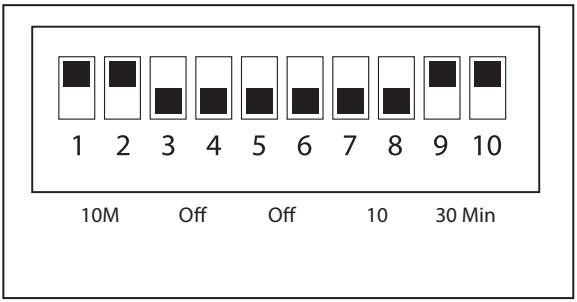


DIP Switch Control Default Setting

| Distance | Time dim | Light sensor auto off | Dim level % | Motion Sensor auto off |
|---|---|---|---|---|
| 1 2 | 3 4 | 5 6 | 7 8 | 9 10 |
| 3 M | Off | Off | 10 | Off |
| 5 M | 30 sec | 10 lux | 20 | 30 sec |
| 8 M | 5 min | 30 lux | 30 | 10 min |
| 10 M | 10 min | 50 lux | 50 | 30 min |

DIP Switch Settings

# Definition of the each DIP switch control Setting:

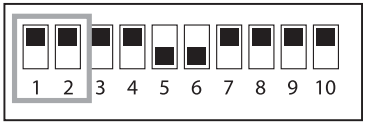


## Switches 1 & 2: Sensor Detection Distance

Sensor Detection Distance is the detection area of the smart sensor. You can set the distance from 3 m / 9.8 ft, 5 m / 16.4 ft, 8 m / 26.2 ft, or 10 m / 33 ft. You may refer to the table below for the height of installation based on 10M setting.

| Height (H) | Sensing Distance (D) |
|---|---|
| 2.5 m / 8.2 ft | 7 m / 23 ft - 8 m / 26.2 ft |
| 3.0 m / 9.8 ft | 8 m / 26.2 ft - 10 m / 32.8 ft |

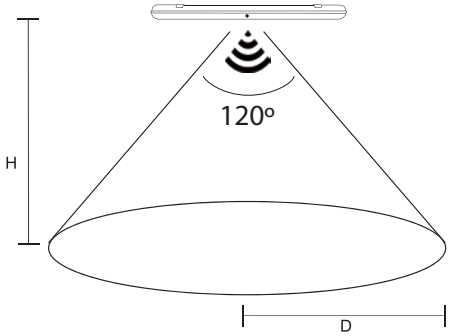


Any movement inside the detection zone will be detected by the motion sensor.

Actual sensing distance may be influen ed by environment conditions.

**NOTE:** The detection distance is measured for a person approximately 1.7 m / 5.6 ft tall, moving at a speed of 1.0 - 1.5 m/sec (3.2 - 5 ft/sec).

You may select 3 m / 9.8 ft or 5 m / 16.4 ft for a small area, and select a 8 m / 26.2 ft or 10 m / 33 ft for a larger area.

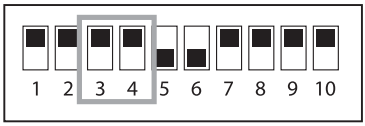


## Switches 3 & 4: Time Dim

Time Dim is the time to dim the lighting fi ture when no movement detected. You can set Time Dim from Off, 30 seconds, 5 minutes, or 10 minutes. The lighting fi ture will be dimmed if there is no movement detected by the sensor. Any movement detected within this period will restart the timer, and the time will be counted again.

You may select 10 min for use in garage, or a shorter time such as 5 min for use in covered patio. You may disable the Time Dim function by selecting OFF.

Refer to switches 7 & 8 setting for dim level setting.

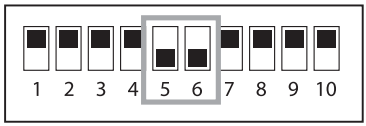


## Switches 5 & 6: Light Sensor Auto Off

Light Sensor Auto Off  efers to the ambient light level to keep lighting fi  ture off during the day time regardless any movement.  For example, if you set to 10 lux, when the ambient light is above 10 lux, the lighting fi  ture will be turned OFF even there is motion detected around.  When the ambient light is below 10 lux and there is motion detected by the sensor, the lighting fi  ture will be ON.

**Note:** One lux is considered as bright as the illumination of a surface from a candle 1 meter away.

The "OFF" mode is for usage where you want to disable the light sensor function, i.e. the lighting fi  ture is controlled by motion sensor only. This mode would be suitable for using in parking lot, which you may want to keep the light always ON regardless of ambient light.

**Note: Light sensor function will be disabled when Motion Sensor Auto Off (Switches 9 & 10) set to "OFF"'**

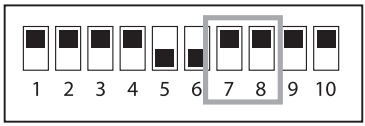


## Switches 7 & 8:  Dim Level %

Dim Level is referring to the light dim level desired after you have selected your Switch 3 & 4 settings.  You can choose the dim level from 10%, 20%, 30% or 50%, which means the percentage of light level remaining from the original lighting level, so for example, 50% would mean that the light will dim to half of its original level.

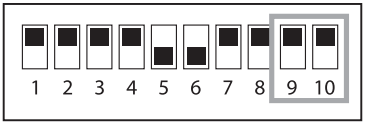


## Switches 9 & 10:  Motion Sensor Auto Off

Motion Sensor Auto Off is the time  or turn OFF the lighting fi  ture completely when there is no motion detected.  You can set to Off  ode, 30 seconds, 10 minutes, or 30 minutes. The light will be turned OFF when there is no motion detected within the preset time.  Any movement detected within this period will restart the timer and the light will be turned on again.

If you have selected Time Dim function ON, the timer will start counting the Time Dim function (S3 & S4) and then per Motion Sensor (S9 & S10). E.g. for S3 & S4 as 30 sec and S9 & S10 as 5 min: the light will be dimmed down when no motion detected for 30 seconds and the light will be turned OFF when no motion is detected for further 5 minutes. Any movement detected within this period will restart timer, light will be turned on again.

You can select "OFF" if you want to have the lighting fi ture be turned ON all the time. By selecting this mode, light sensor function will be disabled.

After choosing the desired DIP switch control setting, please put back the diffuser (cover) properly by closing all of the retaining clips and screws, to ensure the product remains water proof and dust proof.

## Some recommended settings:

### Garage / Warehouse / Indoor use:

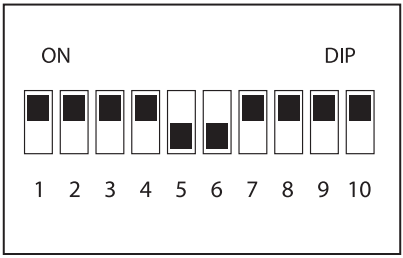


1 & 2 Distance: 10 m / 33 ft
3 & 4 Time Dim: 10 min
5 & 6 Light Sensor Auto Off: Off
7 & 8 Dim Level: 50%
9 & 10 Motion Sensor Auto Off: 30 min

The motion sensor covers a large area 10 m / 33 ft and the light would be dimmed to 50% when there is no movement detected in 10 minutes, and the light would be off completely when there is no movement detected in further 30 minutes.

### Covered Patio / Backyard: (light turn off during day time)

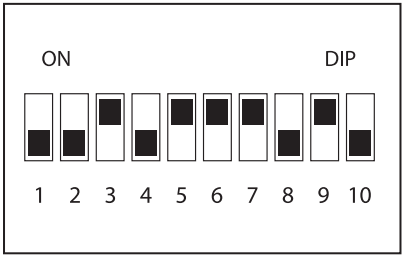


1 & 2 Distance: 3 m / 9.8 ft
3 & 4 Time Dim: 5 min
5 & 6 Light Sensor Auto Off: 50 lux
7 & 8 Dim Level: 30%
9 & 10 Motion Sensor Auto Off: 10 min

You can choose this setting to have light turned off in d y time. During day time with good amount of ambient light, the lighting fi ture would not be turned ON even if movement is detected by the smart sensor. During evening or when ambient light decreases below the preset setting "50 lux", the lighting fi ture will be turned ON when there is movement detected.

The light would be dimmed to 30% when there is no movement detected in 5 minutes, and the light would be OFF completely when there is no movement detected in further 10 minutes.

## Covered Boat Dock:

1 & 2 Distance: 10 m / 33 ft
3 & 4 Time Dim: 10 min
5 & 6 Light Sensor Auto Off: 50 lux
7 & 8 Dim Level: 30%
9 & 10 Motion Sensor Auto Off: 30 min

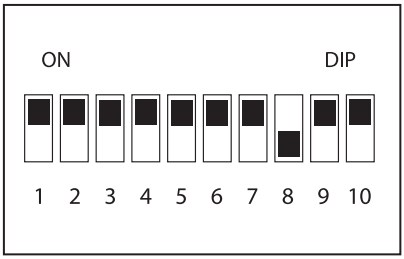


## Indoor Parking Lots / Always On:

1 & 2 Distance: 10 m / 33 ft
3 & 4 Time Dim: 5 min
5 & 6 Light Sensor Auto Off: Off
7 & 8 Dim Level: 30%
9 & 10 Motion Sensor Auto Off: Off

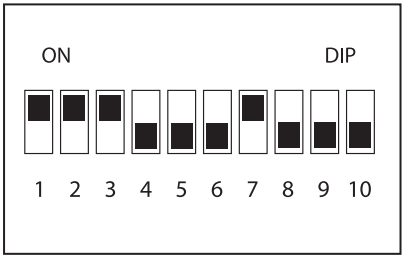


By selecting this mode, the light will be turned ON all the time. When there is no movement within 5 min, the light will be dimmed to 30%. The light will become full light again when there is movement detected.

## Office:

1 & 2 Distance: 10 m / 33 ft
3 & 4 Time Dim: Off
5 & 6 Light Sensor Auto Off: Off
7 & 8 Dim Level: 10%
9 & 10 Motion Sensor Auto Off: 30 min

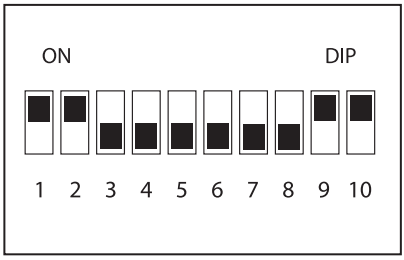


The light would be off ompletely when there is no movement detected in 30 minutes

## Disable Motion / Light Sensor:

1 & 2 Distance: 3 m / 9.8 ft
3 & 4 Time Dim: Off
5 & 6 Light Sensor Auto Off: Off
7 & 8 Dim Level: 10%
9 & 10 Motion Sensor Auto Off: Off

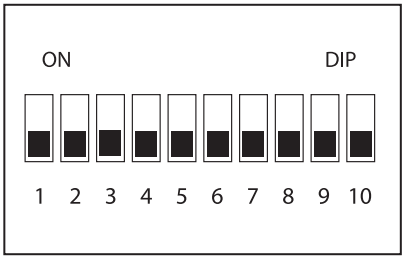


You can choose this setting to simulate ordinary light and operate by the wall On/Off swi ch.

## Other accessories:

The lighting fi ture is provided with a plastic cap and a cable bushing. Always refer to a qualified ele trician if re-wiring of power cable is required. After re-wiring, plastic cap is used for covering the original opening for power cable, and the cable bushing is used for output of power cable / hardwire.

## Troubleshooting:

| Malfunction | Cause | Remedy |
|---|---|---|
| The light is not working | The light is under calibration | Wait for 30 seconds until calibration is finishe |
| | Wrong light control setting selected | Adjust setting |
| | Main switch is OFF | Switch on the Main switch |
| The light is always ON | Continuous movement in the detection zone | Check Switch 1 & 2 settings |
| The light is ON without any identifiable m vement | Movement occurred, but not identified y the sensor (movement behind wall, movement of a small object in immediate lamp vicinity, etc.) | Check Switch 1 & 2 settings |
| The light is not ON despite movement | Rapid movements are being suppressed to minimize malfunctioning of light or the detection zone you have set is too small | Check Switch 1 & 2 settings |

## Maintenance:

CLEANING INSTRUCTIONS: When cleaning, make sure you have unplugged the lighting fi ture and allow to it cool to room temperature. Do not open the retaining clips when cleaning. The lighting fi ture can be cleaned with a feather duster or a soft damp cloth. You should plug in the lighting fi ture after it has been completely dried.

# Warranty:

## Winplus North America

## Limited warranty

Winplus North America warrants, to the original purchaser, that its products are free from defects in material and workmanship for 1 year from the date of original purchase. Where permitted by law, Winplus North America's liability shall be limited to that set forth in this limited express warranty. This limited express warranty shall be the exclusive remedy of the purchaser and Winplus North America makes no other warranty of any kind aside from the limited express warranty stated above.

**NOTE:** Warranty only applies for North American customers of purchases made in North America.

## Conditions of Warranty

If during the 1 year warranty period your new product is found to be defective, Winplus North America will repair such defect, or replace the product, without charge for parts or labor subject to the following conditions:

- All repairs must be performed by Winplus North America.
- All warranty claims must be accompanied by a copy of the sales receipt or bill of sale.
- The equipment must not have been altered or damaged through negligence, accident, improper operation, or failure to follow the product instructions for installation, use, or care.
- The replacement of parts is excluded from the warranty when replacement is necessary due to normal wear and tear.
- Repair or replacement parts supplied by Winplus North America under this warranty are protected only for the unexpired portion of the original warranty.
- This is a "repair or replace" warranty only, and does not cover the costs incurred for the installation, removal or reinstallation of the product.

OWNER'S RESPONSIBILITIES: Winplus North America will make every effort to provide warranty service within a reasonable period of time. SHOULD YOU HAVE ANY QUESTIONS ABOUT SERVICE RECEIVED OR IF YOU WOULD LIKE ASSISTANCE IN OBTAINING SERVICE, PLEASE CALL TOLL FREE 1.866.294.9244 DURING REGULAR BUSINESS HOURS MONDAY THROUGH FRIDAY 9:00 AM TO 5:00PM.

**NOTE:** Toll Free # is for North America Customers ONLY. See Customer service section for customer contact numbers for other regions/offices.

For customer service and technical support, please call us at 1.866.294.9244 or email us at customercare@winplususa.com. If at that time it is determined that a replacement unit is needed, the support representative will issue a Return Authorization and instruct on how to get a new unit.

Winplus North America makes no other warranty of any kind aside from the limited express warranty stated herein.

DISCLAIMER OF WARRANTIES, INCLUDING WARRANTY OF MERCHANTABILITY AND WARRANTY OF FITNESS FOR PARTICULAR PURPOSE: EXCEPT AS SPECIFICALLY SET FORTH HEREIN, NO WARRANTY OR REPRESENTATION, EXPRESS OR IMPLIES, IS MADE AS TO THE LED UTILITY LIGHT. EXCEPT AS EXPRESSLY SET FORTH HEREIN, WINPLUS NORTH AMERICA AND/ OR ITS AFFILIATES EXPRESSLY DISCLAIMS, WITHOUT LIMITATION, ANY STATUTORY WARRANTIES AND ALL IMPLIED WARRANTIES, INCLUDING ANY IMPLIED WARRANTY OF MERCHANTABILITY OR FITNESS FOR A PARTICULAR PURPOSE.

## FCC / IC Compliance Statement:

This device complies with Part 15 of the FCC rules and Industry Canada license-exempt RSS standard(s). Operation is subject to the following two conditions: (1) this device may not cause harmful interference, and (2) this device must accept any interference received, including interference that may cause undesired operation.

The manufacturer is not responsible for any radio or TV interference caused by unauthorized modific  tions or change to this equipment. Such modific  tions or change could void the user's authority to operate the equipment.

This radio transmitter (IC: 7297A-LM55970) has been approved by Industry Canada to operate with the antenna types listed below with the maximum permissible gain indicated. Antenna types not included in this list, having a gain greater than the maximum gain indicated for that type, are strictly prohibited for use with this device.

This equipment has been tested and found to comply with the limits for a Class B digital device, pursuant to part 15 of the FCC Rules. These limits are designed to provide reasonable protection against harmful interference in a residential installation. This equipment generates, uses and can radiate radio frequency energy and, if not installed and used in accordance with the instructions, may cause harmful interference to radio communications. However, there is no guarantee that interference will not occur in a particular installation. If this equipment does cause harmful interference to radio or

television reception, which can be determined by turning the equipment off and on, the user is encouraged to try to correct the interference by one or more of the following measures:

-- Reorient or relocate the receiving antenna.

-- Increase the separation between the equipment and receiver.

-- Connect the equipment into an outlet on a circuit different from that to which the receiver is connected.

-- Consult the dealer or an experienced radio/TV technician for help.

The device has been evaluated to meet general RF exposure requirement.

To maintain compliance with FCC's RF exposure guidelines, this equipment should be installed and operated with a minimum distance of 20cm between the radiator and your body.

CAN ICES-3(B)/NMB-3(B)

## Caution:

Note : Cet appareil est conforme à la Partie 15 des règlements de la FCC et aux normes RSS de l'Industrie du Canada. Son fonctionnement est soumis aux deux conditions suivantes : (1) cet appareil ne doit pas causer des interférences nuisibles, et (2) cet appareil doit accepter toute interférence reçue, y compris les interférences qui peuvent provoquer un fonctionnement indésirable.

Le fabricant n'est pas responsable des toutes interférences radio ou télévision causées par des modific tions non autorisées apportées à cet appareil. De telles modific tions peuvent empêcher l'utilisateur d'utiliser l'appareil.

This radio transmitter (identify the device by certific tion number or model number if

Category II) has been approved by Industry Canada to operate with the antenna types listed below with the maximum permissible gain indicated. Antenna types not included in this list, having a gain greater than the maximum gain indicated for that type, are strictly prohibited for use with this device.

DISTRIBUTED BY:
COSTCO WHOLESALE CORPORATION P.O. BOX 34535
SEATTLE, WA 98124-1535, USA
TEL: 1-800-774-2678
www.costco.com

MADE IN CHINA

Have a comment or question? Email us at customercare@winplususa.com
or visit us online at **www.winplus.com**

WINPLUS®

820 South Wanamaker Ave., Ontario, CA 91761, USA | Tel: 1-866-294-9244

© 2016 Winplus North America Inc. All rights reserved.