Motion-Activated Light with Camera

Model: LM56176

CARE & USE INSTRUCTIONS

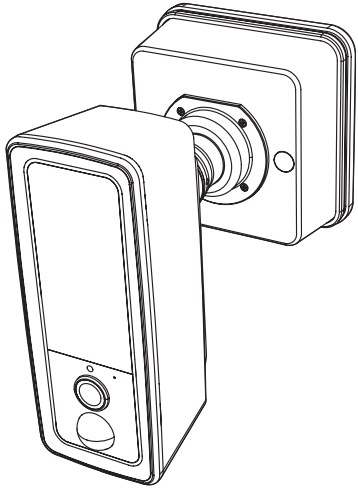

IMPORTANT, RETAIN FOR FUTURE REFERENCE: READ CAREFULLY

For assistance with assembly, installation, parts and customer service, call us at 1-866-294-9244 (English), Monday - Friday, 8am - 5pm Pacific Time, email us at info@kodabuilt.com

2975 Red Hill Ave., Ste. 100, Costa Mesa, CA 92626, USA

www.KodaBuilt.com

Table of Contents

1. Table of Contents	2
2. Package Contents	3
3. Product Specifications	4
4. Product Overview	5
5. Pre-Installation Check List	6
6. Installation	7
7. Set up the App	13
8. Using the App	17
9. Troubleshooting	tba
10. FCC / IC Compliance Statement	tba
11. Safety Information	tba
12. Maintenance & Warranty	tba
13. General Information	tba

Package Contains

1 x Motion-Activated Light with Camera

Conversion Kit (WIN-56176A_V1)

1 x Phillips Screwdriver

1 x S-Hook

3 x Wall Anchor

3 x Self-tapping Screw (for drywall or wood)

2 x Spare Mounting Screw (for light fixture)

1 x Spare Short Screw (for Power Box)

1 x Spare Rubber Plug

1 x Waterproof Cap

1 x Instruction Manual

1 x Quick Installation Guide

1 x Wall Mounting Plate

Tools needed (not included)
Power Drill

Product Specifications

Input:	120 Vac, 60 Hz, 0.2 A
Wattage:	24 W
Dimensions (D x W x H):	7.9 cm x 19.4 cm x 7.5 cm (3.11 in x 7.64 in x 2.95 in) (includes external heat sink)
Light Output:	1300 Lm
Color Temperature:	4000 K
Video Resolution:	1080p Full HD
Viewing Angle:	106° Field of View
IR Night Vision:	Up to 7.62 m (25 ft)
Connectivity:	802.11b/g/n Connection @ 2.4 Ghz
Audio:	Two-Way Audio with Noise Cancellation
Siren dB:	
Weather Resistance:	IP65 rating
Operating Temperature:	-20°C~50°C (-4°F~122°F)

Front View

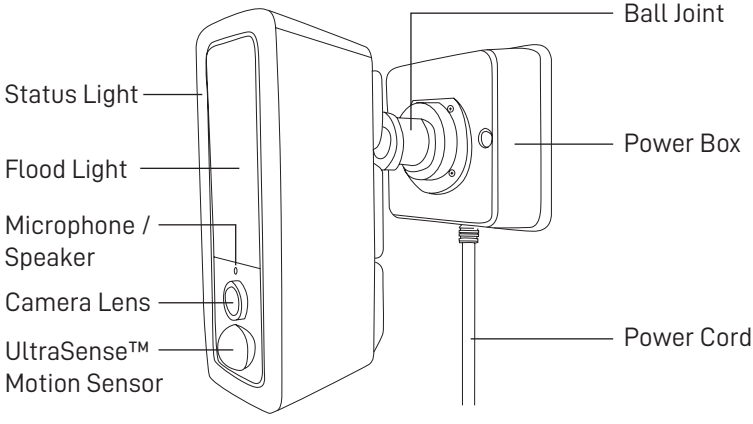

Back View

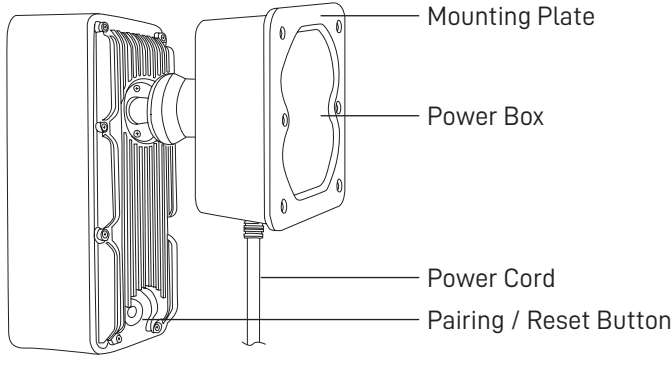

Download the app

Install the KODA app on your smart device. Scan below QR code or search KODA in the App Store or Google Play. Download and install the app.

KODA APP

Download on the App Store

GET IT ON Google Play

KODA

SAMPLE

SAMPLE

NOTE: The app is only available on smartphones with Apple iOS 9 or newer, and Android 5.0 or newer. The KODA app is not accessible from tablets, browsers, or PCs.

TIP: Check out the installation video at www.KodaBuilt.com to help familiarize yourself with the installation process before starting.

Set up the app

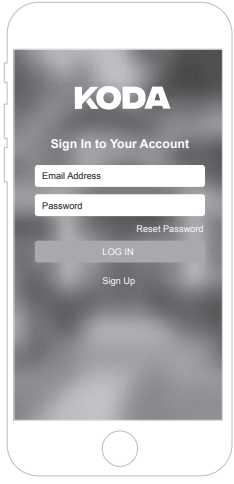

Set up a new account

1. Open the KODA app on your smartphone.

2. Select **Sign Up** and fill in the information to get started if you are a new user. If you already have a KODA account, select **Log In** and fill in your login information.

Add a new device

1. Select the ⊕ icon to add a new device.

2. Select **LightCam** from the list of devices.

3. Follow the in-app instructions.

Set up the app

Pairing your mobile device with the LightCam

1. Press the pairing button the back of your LightCam device. Your LightCam device should be flashing red and blue indicating it is ready for pairing. Press **Next** on the app screen to start pairing.

2. When you see the status light on LightCam pulsating red and blue, press **Next** to enter auto-pairing mode.

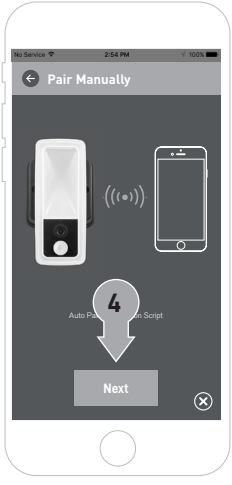

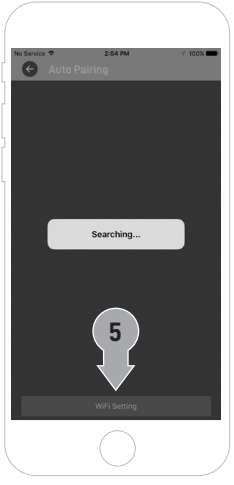

3. Android users: The app will automatically jump to the SET DEVICE NAME page at this stage.

4. iOS users: Press Next on the auto-pairing screen to start the pairing process.

5. Press **WiFi Setting** to perform manual connect in the iOS WiFi setting page.

Set up the app

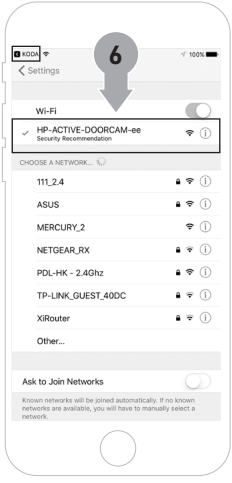

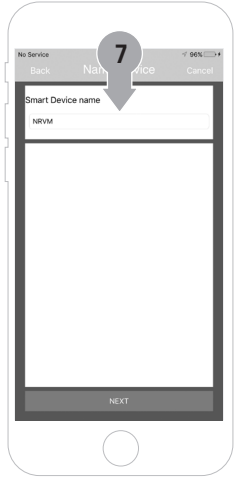

6. The WiFi setting page will scan the LAN network and search for the LightCam. Select the SSID of the LightCam "KODA-LM01-XXX" and press the KODA icon on the top left of the screen to go back to the KODA app.

7. Name your LightCam and press **Next**.

TIP: Suggested names:
LightCam_FrontPorch
LightCam_SideYard
LightCam_Pool

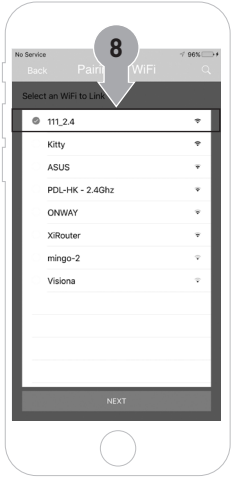

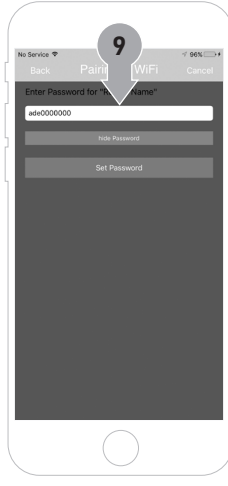

8. The LightCam is now paired to your smartphone. Next, connect the LightCam to your local network. Select the SSID of your local network and press **Next**.

9. Input your router password and press **Set Password**.

Pre-Installation Check List

Select the installation location

We recommend installing the LightCam 8.9 ft (2.7 m) above the ground, with camera tilted down 24 degrees for optimal viewing. Once the LightCam has been installed, open the KODA app to adjust the viewing angle as needed.

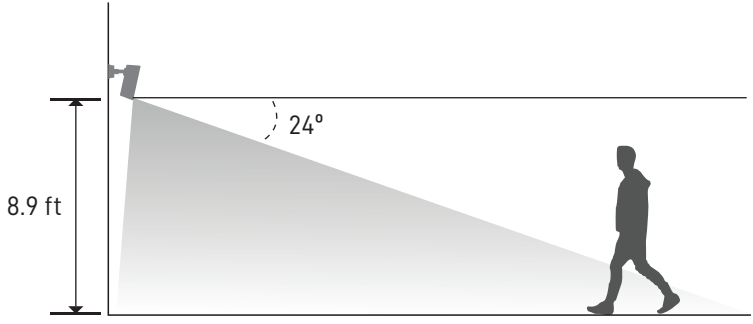

Check WiFi Signal

Make sure your home WiFi network is within range of the installation location. Check your smartphone where the installation point for at least three bars.

TIP: Stream a video at the installation point to determine if the WiFi signal is stable at that location. Thick walls or insulation may decrease your WiFi signal strength significantly so checking your signal strength prior to installation is important.

Plug-in option

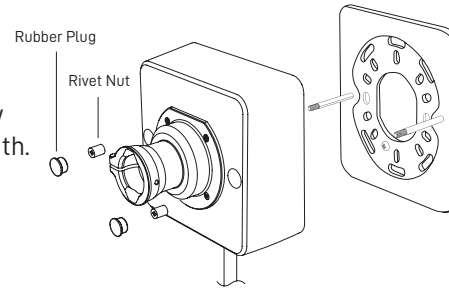

1. Remove the two rubber plugs on the LightCam's power box. Unscrew and remove the rivet nuts underneath. Place these aside for now.

2. Detach the mounting plate from the power box.

3. Place the mounting plate over the installation location, and mark your intended drilling positions with a pencil. Drill pilot holes into the areas you marked and insert the plastic anchors into the pilot holes.

TIP: Before installing, make sure the power cord of the LightCam can easily plug into the desired outlet. The power cord is 78.74 in (2 m) in length.

TIP: Use a level (not included) when marking the drill locations to help with the installation.

NOTE: If your wall is made of masonry (e.g. brick or concrete) or stucco material, use a 15/64 inch (6 mm) drill bit for your power drill (both not included) to drill pilot holes into the wall. Insert the plastic anchors into the pilot holes. Skip this step if you are installing on wood. See our drill bit guide on page 3 for more information on drill bit types and sizes.

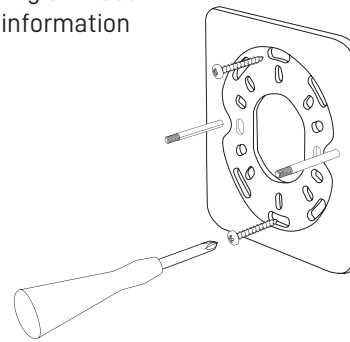

4. Place the mounting plate over the plastic anchors and secure the screws into the plastic anchors.

5. Slide the LightCam over the screw posts on the mounting plate. Reinstall the rivet nuts and rubber plugs.

Installation

6. Connect the power cord to the nearest power outlet.

WARNING: If plugging the LightCam to an outdoor outlet, the outdoor outlet must be outdoor rated and have a cover to protect the outlet and LightCam plug from rain, snow, and weather.

7. Open the KODA app to adjust the camera's viewing angle as needed. To adjust the viewing angle, carefully loosen the jewelry screw around the ball joint with one hand while holding onto the LightCam with the other hand to prevent dropping the unit. Once the desired camera angle has been selected, tighten the screw to secure into place.

CAUTION: When adjusting the positioning of the LightCam, it is important to note the ball joint connecting the LightCam to the power box is intended to lock into place and ONLY rotates 180-degrees in a counter clockwise direction. Do not use excess force to change the LightCam angle, doing so may permanently damage the unit. To adjust the LightCam angle, turn the LightCam left or right (Figure) to first unlock the ball joint. Now you can twist the LightCam upward for the angle most suitable for the installation location. The ball joint will lock at the top. Go back to center and repeat the steps to unlock the ball joint if you wish to change the LightCam angle to the opposite direction.

IMPORTANT SAFETY INSTRUCTIONS

This portable luminaire has a polarized plug (one blade is wider than the other) as a feature to reduce the risk of electric shock. This plug will fit in a polarized outlet only one way. If the plug does not fit fully in the outlet, reverse the plug. If it still does not fit, contact a qualified electrician. Never use with an extension cord. Do not alter the plug.

Hardwire option

1. Before installing the LightCam, a standard light fixture needs to be pre-installed on the wall, and the power supply wires need to be run to the light fixture providing 120Vac of power. If the light fixture does not exist, contact a qualified electrician for installation.

2. Shut OFF the main power at the fuse or circuit breaker before installing the light fixture or making any electrical connection. Uninstall the existing light fixture if one exists. You may use a non-contact voltage tester to ensure no power is running to the wires.

WARNING: Failure to disconnect the power supply prior to installation may result in serious injury or death.

NOTE: Remove the existing bracket from the junction box if one is installed.

NOTE: Do not connect the LightCam to a dimmer switch or timer. Doing so may damage the LightCam.

3. Repeat step 1 to 2 from page 11 on how to detach the mounting plate from the power box.

Installation

4. Place the mounting plate over the pre-installed light fixture and secure with the two mounting screws provided. If your existing light fixture has a junction box, simply screw the mounting plate over the existing junction box. Detach the designated screw (colored green) from the mounting plate. Attach the green (ground) supply wire to that hole and reinstall the screw. Pull out the white (neutral) supply wire and black (hot) supply wire from the light fixutre through the center of the mounting plate.

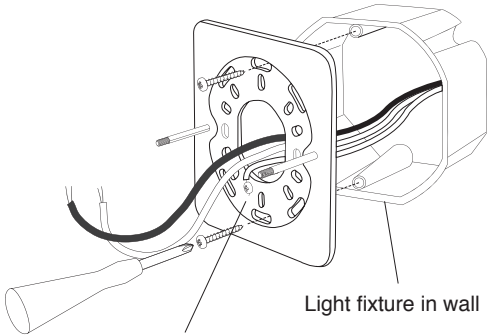

5. Loosen the four screws using the Phillips screwdriver provided and open the power box.

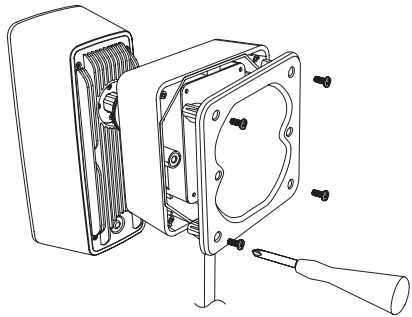

6. Disconnect the two wire nuts and separate the spliced white (neutral) supply wire and black (hot) supply wire from the power cord. Save the wire nuts for later use.

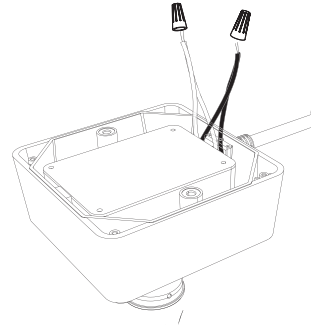

7. Remove metal clamp from the power cord bushing. Pull out the unspliced power cord from the power box.

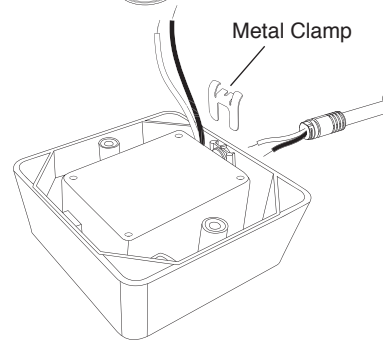

8. Insert one end of the S-hook through the hole in the power box where the power cord passed through, and the other end through the hole of the mounting plate. Gently ease the LightCam to hang in place while you work on hardwiring the LightCam.

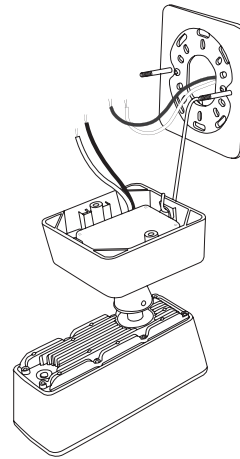

Installation

9. Line up the white (neutral) supply wire to white light fixture wire. Place the wire nut over the wires and twist clockwise to secure. Line up the black (hot) supply wire to black light fixture wire. Place the wire nut over the wires and twist clockwise to secure.

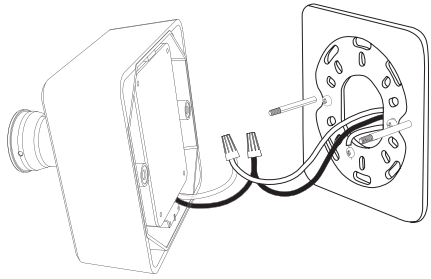

10. Hold the LightCam with one hand. Remove the S-hook with your other hand.

11. Slide the LightCam over the screw posts on the mounting plate.

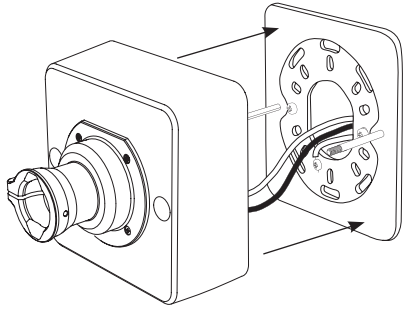

12. Reinstall the rivet nuts and rubber plugs.

13. Install the waterproof cap back into the power box where the power cord was detached and make sure it is correctly seated.

WARNING: Fail to install the waterproof cap correctly may result in serious accident including short circuit of the unit due to water gets in.

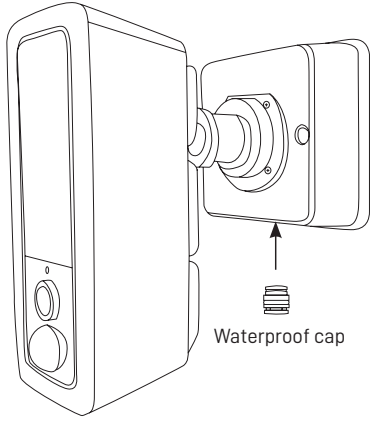

14. Restore power to the circuit from the breaker box.

15. Open the KODA app to adjust the camera's viewing angle as needed. To adjust the viewing angle, carefully loosen the jewelry screw around the ball joint with one hand while holding onto the LightCam with the other hand to prevent dropping the unit. Once the desired camera angle has been selected, tighten the screw to secure into place.

CAUTION:
When adjusting the positioning of the LightCam, it is important to note the ball joint connecting the LightCam to the power box is intended to lock into place and ONLY rotates 180-degrees in a counter clockwise direction. Do not use excess force to change the LightCam angle, doing so may permanently damage the unit. To adjust the LightCam angle, turn the LightCam left or right (Figure) to first unlock the ball joint. Now you can twist the LightCam upward for the angle most suitable for the installation location. The ball joint will lock at the top. Go back to center and repeat the steps to unlock the ball joint if you wish to change the LightCam angle to the opposite direction.

Using the app

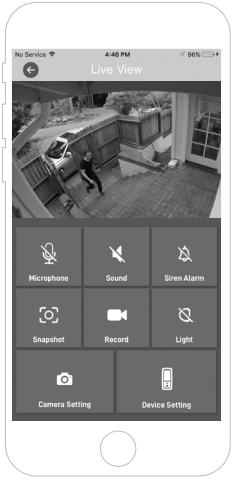

10. You should see the live view if the connection was successful.

Live View Introduction

Enable to speak to your visitors. Disable to mute

Enable/disable disable listening to your visitors. Turn sound on/off to listen in on the LightCam. (You cannot speak to your visitor unless Microphone is enabled.)

Enable/disable the siren alarm

Record a video clip up to 30 seconds and store in the gallery

Turn the LightCam spotlight on/off

Setup the camera
(More detail discriptions on page 19)

Setup the LightCam

Adjust LightCam settings

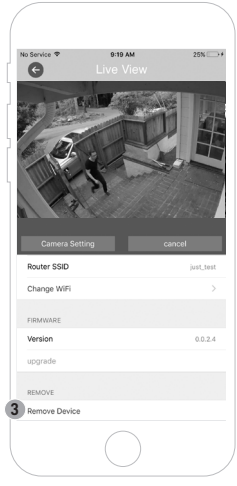

Device Setting

1. Rename the device.

2. Change router SSID (router name).

3. Remove device.

Note: you can also go to Device Setting from the Device List view. (See page 19)

Camera Setting

1. Adjust brightness and contrast of LightCam
2. Turn Pet Mode ON/OFF

   By turning on the Pet Mode, the motion trigger won't set off when your pet is walking around.

3. Day Mode / Night Mode

   When Night Mode is set, the live view will change to black and white.

4. Camera View Rotation

   The default camera view is set to Normal. Press Rotate if you installed the LightCam upside down.

5. Adjust motion trigger sensitivity
6. Adjust time delay

   When a motion trigger is actived, the LightCam will record a video clip and upload to the cloud server. Use this setting to adjust the time delay of the next motion trigger after 10 seconds, 3 minutes, or 5 minutes.

7. Adjust brightness level of the ? light
8. Adjust duration light stays on

   The ? light will turn on with each motion trigger, depending on the brightness of the surroundings. Note: The ? light will extend its duration after the set lighting peroid, if the LightCam detects continuous movements.

Using the app

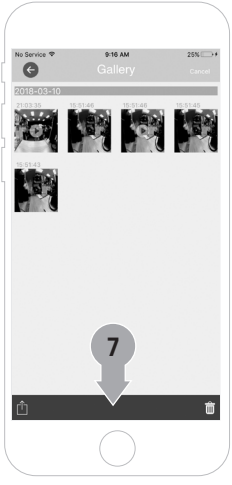

Grouping

If you have multiple LightCams installed in your house, you can choose to group live views from different LightCams and show on one screen simultaneously.

1. Press the Grouping tap.
2. Press the ⊕ icon to create a group.
3. Check the name of the LightCams you already set up in an order you prefer, from left to right, top to bottom. Note: You can add up to 4 LightCams in one group.
4. Press Finish to create the group.
5. You can also press this to go to Device Setting.

Manage the Gallery

6. All the contents (video clips, images) captured by motion trigger will be stored in the gallery under each Life View.
7. You can share or delete the contents.
8. Choose how to share the contents.

FCC / IC Compliance Statement:

This device complies with Part 15 of the FCC rules and Industry Canada licenseexempt RSS standard(s). Operation is subject to the following two conditions: (1) this device may not cause harmful interference, and (2) this device must accept undesired operation.

Warning: Changes or modifications to this unit not expressly approved by the party responsible for compliance could void the user's authority to operate the equipment.

The manufacturer is not responsible for any radio or TV interference caused by unauthorized modifications or change to this equipment. Such modifications or change could void the user's authority to operate the equipment.

This equipment has been tested and found to comply with the limits for a Class B digital device, pursuant to part 15 of the FCC Rules. These limits are designed to provide reasonable protection against harmful interference in a residential installation. This equipment generates, uses and can radiate radio frequency energy and, if not installed and used in accordance with the instructions, may cause harmful interference to radio communications. However, there is no guarantee that interference will not occur in a particular installation. If this equipment does cause harmful interference to radio or television reception, which can be determined by turning the equipment off and on, the user is encouraged to try to correct the interference by one or more of the following measures:

- Reorient or relocate the receiving antenna.
- Increase the separation between the equipment and receiver.
- Connect the equipment into an outlet on a circuit different from that to which the receiver is connected.
- Consult the dealer or an experienced radio/TV technician for help.

CAN ICES-005 (B) / NMB-005 (B)

IC Warning:
RSS-Gen Issue 3 December 2010"&"CNR-Gen 3e éditionDécembre 2010:
- English:
This device complies with Industry Canada licence-exempt RSS standard(s).
Operation is subject to the following two conditions: (1) This device may not cause interference, and (2)
This device must accept any interference, including interference that may cause undesired operation of
the device.
- French:
Le présentappareilestconforme aux CNR d'Industrie Canada applicables aux appareils radio exempts
de licence. L'exploitationestautorisée aux deux conditions suivantes:
(1) l'appareil ne doit pas produire de brouillage, et
2) l'utilisateur de l'appareildoit accepter tout brouillageradioélectriquesubi, mêmesi le brouillageest susceptible d'encompromettre le fonctionnement.

The device has been evaluated to meet general RF exposure requirement.
To maintain compliance with FCC/IC's RF exposure guidelines, this equipment should be installed and operated with a minimum distance of 20cm between the radiator and your body.

Declaration of Conformity

Product Description: Motion Activated Light with Camera
Model No. : LM56176
Responsible Party:
Winplus North America Inc. 820 South Wanamaker Avenue, Ontario, CA 91761
Tel: 866-294-9244

WARNING: Read All Instructions

When using outdoor portable luminaires, basic safety precautions should always be followed to reduce the risk of fire, electric shock, and personal injury, including the following . . .

a) Use only three-wire outdoor extension cords that have three-prong grounding plugs and grounding receptacles that accept the appliance's plug.

b) Ground Fault Circuit Interrupter (GFCI) protection is to be provided on the circuit(s) or outlet(s) to be used for the wet location portable luminaire. Receptacles are available having built-in GFCI protection and are able to be used for this measure of safety. If your receptacle does not have GFCI protection or if you are not sure, please contact a qualified electrician to help you install one.

c) Use only with an extension cord for outdoor use, such as an extension cord of cord type SEW, SEOW, SEOOW, SOW, SOOW, STW, STOW, STOOW, SJEW, SJEOW, SJEOOW, SJW, SJOW, SJOOW, SJTW, SJTOW, or SJTOOW

d) DANGER: Improper connector of the power cord increases the risk of electric shock. Do not modify the plug. if it will not fit an outlet, have a proper outlet installed by a qualified electrician.

AVC License Statement

THIS PRODUCT IS LICENSED UNDER THE AVC PATENT PORTFOLIO LICENSE FOR THE PERSONAL USE OF A CONSUMER OR OTHER USES IN WHICH IT DOES NOT RECEIVE REMUNERATION TO (i) ENCODE VIDEO IN COMPLIANCE WITH THE AVC STANDARD ("AVC VIDEO") AND/OR (ii) DECODE AVC VIDEO THAT WAS ENCODED BY A CONSUMER ENGAGED IN A PERSONAL ACTIVITY AND/OR WAS OBTAINED FROM A VIDEO PROVIDER LICENSED TO PROVIDE AVC VIDEO. NO LICENSE IS GRANTED OR SHALL BE IMPLIED FOR ANY OTHER USE. ADDITIONAL INFORMATION MAY BE OBTAINED FROM MPEG LA, L.L.C. SEE HTTP://WWW.MPEGLA.COM

Disposal of Waste Equipment by Users

Do not dispose the LightCam with your other household waste. Instead, please contact your local recycling center or designated collection point for recycling of electronic waste and electronic equipment to dispose the product. Some states and/or counties have strict laws prohibiting the disposal of electronic devices with household waste. For more information, please contact your household waste disposal service or recycling center for instructions on disposal.

Have a comment or question? Email us at info@koda.com
or visit us online at **www.KodaBuilt.com**

KODA™

820 South Wanamaker Ave., Ontario, CA 91761, USA | Tel: 1-866-294-9244
© 2018 Winplus North America Inc. All rights reserved.

Revision date: June 2018 ML-56176_V1