MONSTER®

POWER GRID 300

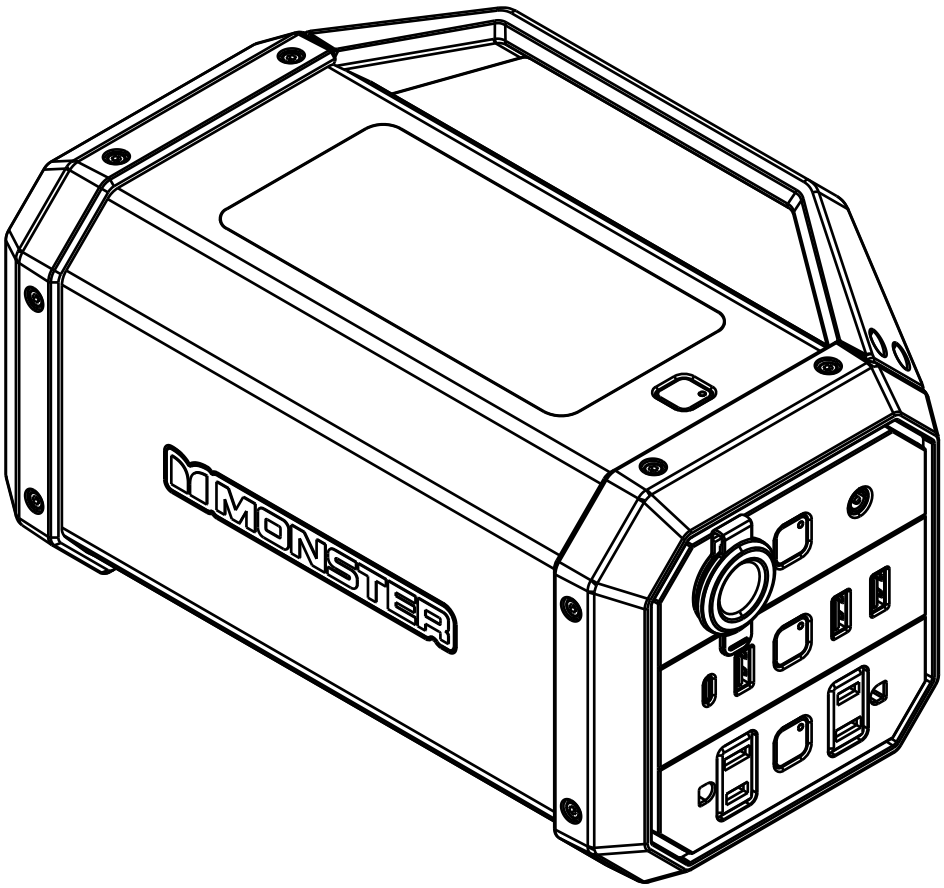

USER MANUAL

MUST READ

Please read the instruction manual carefully before any operation on this power station. This device contains battery product that may cause personal injures if not used properly. If you are uncertain or have questions operating this device, please consult your reseller or local dealer.

WARNING

Pay full attention to cautionary statements associated to your AC devices when connecting to the power station.

ATTENTION

The purpose of this instruction is to guide you as to how to operate this device. As from time to time, the operating software may be revised for the latest revision. As for functions, features and benefits will remain the same. All photos shown in the instruction are for reference only, as it may subject to change.

INTRODUCTION

Thank you for purchasing the Power Grid 300. It has 2 AC outlets and several DC outputs to power items such as mobile phones, laptops, cameras, CD players, various chargers, game machines, DVD players and electric tools. It is also suitable as a backup power supply to solve temporary electricity problems during an emergency situation, or while camping when power supply is scarce.

This product generates Pure Sine Wave which is suitable for all AC conventional applications.
*Regarding actual AC output, specifications will be customized according to different countries, regions and users.

SPECIFICATION

Item	Description
Product name:	Portable Power Station
Model:	2MNPP0209
Dimension:	265 * 141* 162 mm
Capacity:	296Wh
Battery type:	Lithium Ion batteries
DC Charging input:	18V ⎓ 3A
Inverter:	300W (Pure Sine Wave)
AC output 1/2:	110Vac/60Hz/300W (Max) (Note: 2 AC outlets shared 300W Max)
USB output 1/2/3:	5V ⎓ 2.4A
USB-C output:	PD60W
DC output 1/2:	12V ⎓ 10A (Note: 2DC output ports shared 120W Max)
Wireless charging output 1:	10W (Max)
LED light:	2W
Charging temperature:	0℃ to 40℃
Discharging temperature:	-10℃ to 40℃
Cycle life:	500 times
Built-in protections:	1. Short-circuit protection
	2. Over-current protection
	3. Over-voltage protection
	4. Low voltage protection
	5. Over-load protection
	6. Hight or Low Temperature protection
Product charging time: (From 0% to 100%)	1. It will take about 8 hours to fully charge the product with AC adapter (18V ⎓ 3A)
	2. It will take about 7 hours to fully charge the product with the PD60W charger
	3. It will take about 4 hours to fully charge the product with the PD60W charger+AC adapter (18V ⎓ 3A)
	4. It will take about 12 hours to fully charge the product with car adapter (12V ⎓ 3A)
	5. It will take about 4.2 hours to fully charge the product with Solar panel (100W) (not included)

PRODUCT OVERVIEW

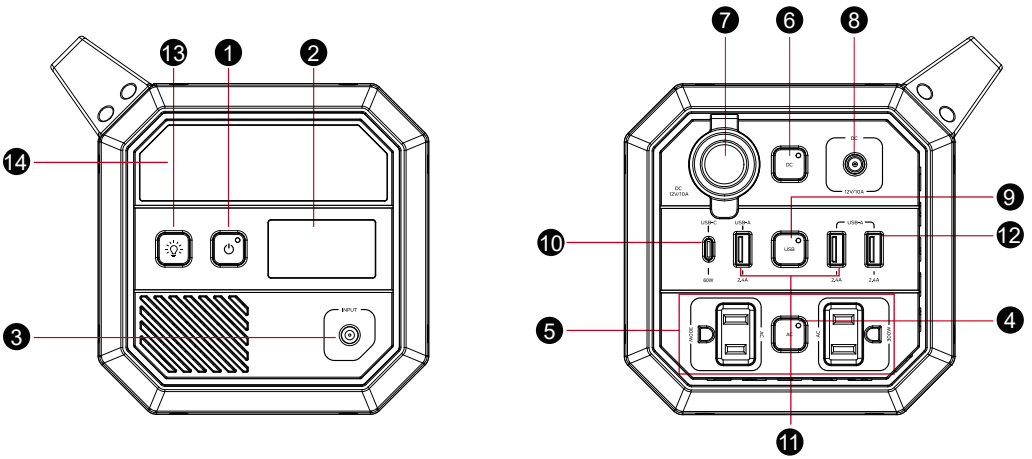

1. Master switch	5. AC output	9. USB switch	13. LED switch
2. LCD display	6. DC switch	10. PD60W	14. LED light
3. DC input	7. Cigarette lighter socket	11. 2.4A USB * 2	
4. AC switch	8. DC output	12. 2.4A USB	

Be careful!! This AC power socket and voltage on product are different according to different countries or regions, please refer to the actual product.

LCD DISPLAY

LCD display screen is indicating battery capacity and input or output of this product. When 'Power' button is pressed, LCD screen will light up and indicate the battery capacity. After 30s, it will goes into sleep mode.

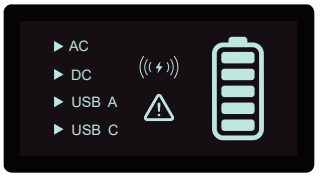

GUIDE TO OPERATE

For any functions to work, please make sure the 'Master Switch' is turned on.

1) How to use wireless charging feature:

Press the 'Master' switch to power on the product then press the wireless charging button to turn it on, the wireless symbol will be displayed on the LCD screen and will flash (stand-by mode). Place your phone over the center of the wireless charging pad to automatically begin charging. The will stop flashing and stay displayed (working mode).

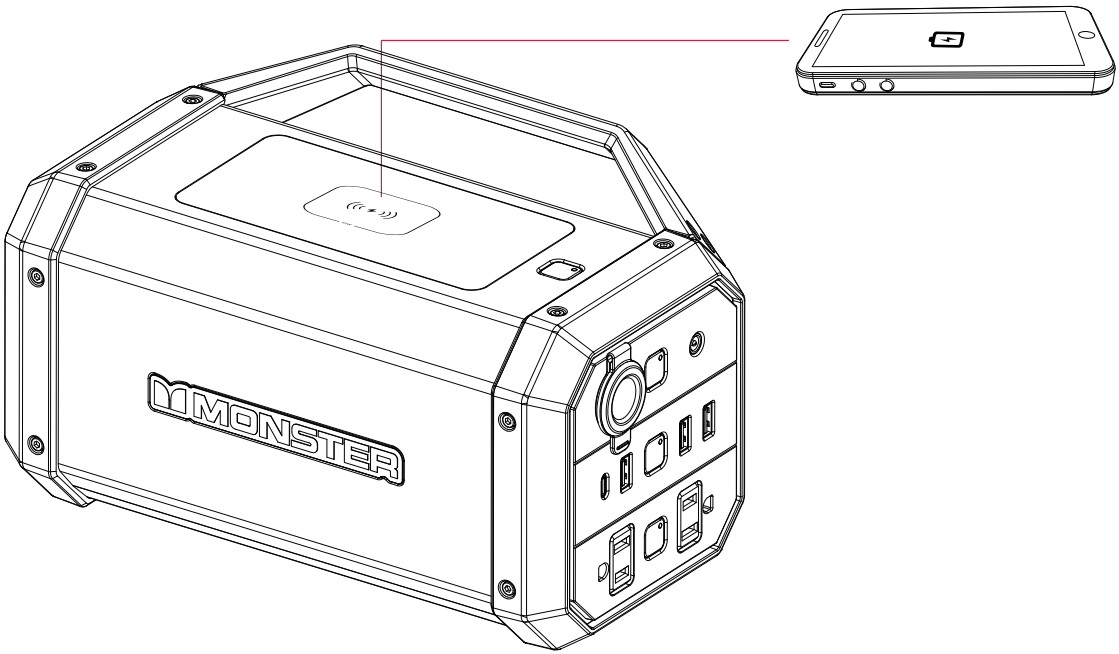

2) How to use DC output ports:

Connect your device to the DC output port or Cigarette lighter socket. Press 'DC' button to turn on the DC ports, LCD screen will display 'DC '.
Press 'DC' switch again to turn off the ports.

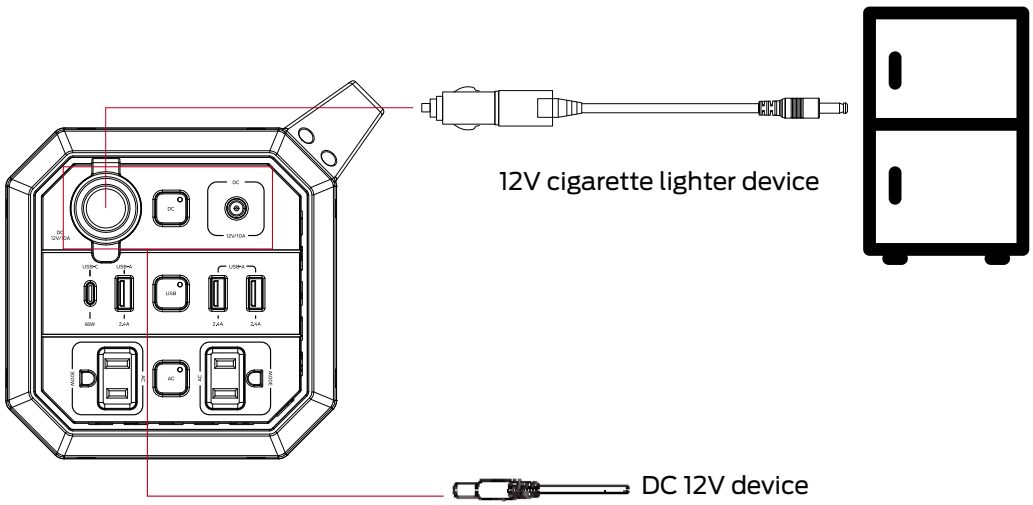

3) How to use USB ports:

Connect your digital device via the USB charging cable. Press 'USB' button to turn on, LCD screen will display '**USB**'. Press the button again to turn off.

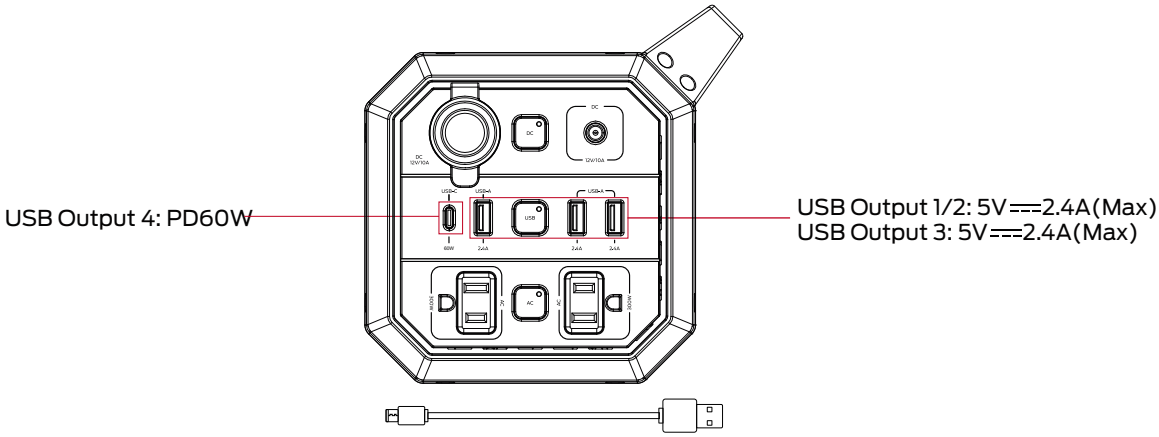

4) How to use AC ports:

Press the AC button to turn on, LCD screen will display AC. Connect your AC devices. Press AC switch again to turn off.

Pay attention to AC power for the appliances. Make sure the total power consumption for all appliances is less than 300W.

Warning: The interface specifications and voltage standards in different countries are different. Before use, please carefully check whether the product specifications are consistent with the usage specifications of electrical appliances, otherwise it may lead to dangerous conditions.

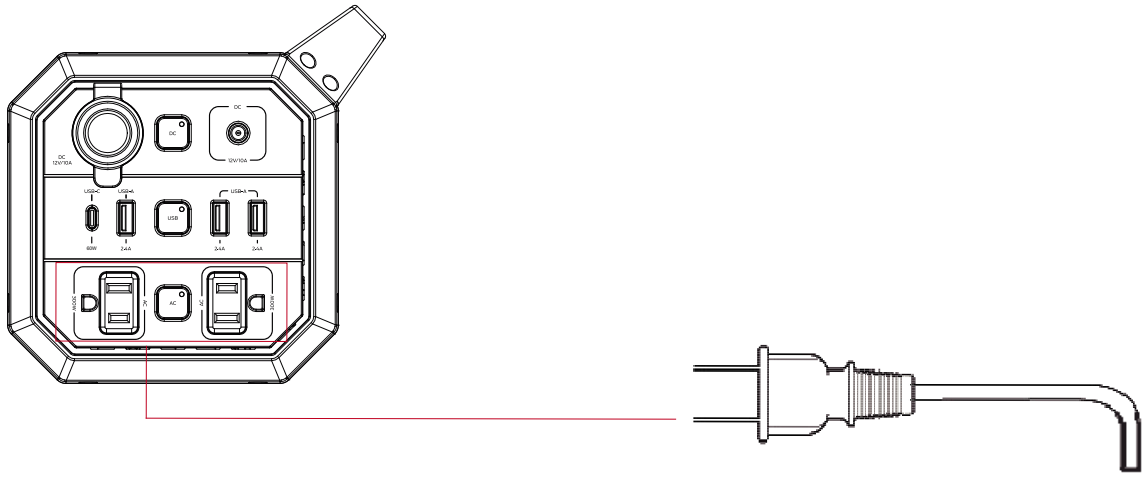

If AC device has short circuit or more power required than the rated output on power station, it will trigger the device to protect itself on short circuit or over load condition.

⚠ AC load shall not exceed 300W rated power, otherwise it will self-protect.

※ When the product is not in use, please press the 'switch' buttons to turn off accordingly , or hold the "Master switch" for 2 seconds to force shut down.

5) How to use flashlight:

1. Press '' button for 2s to turn on the LED light;
2. Press '' button again to SOS mode;
3. Press '' button once more time to rapid flash;
4. Long press '' button for 2s to turn off the LED light.

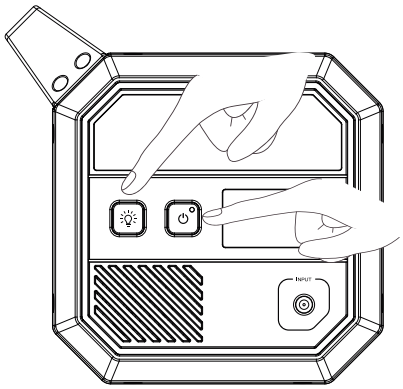

6) How to recharge the product:

When the product is charging, the will flash on the LCD screen. After it is fully charged for 10 seconds, it will turn off automatically.

A. Connect the AC adapter to DC charging input port, then plug-in the AC adapter to a wall outlet.

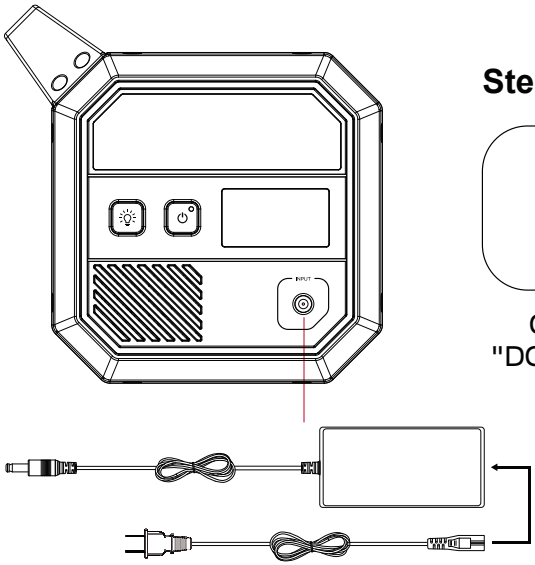

Step 1:

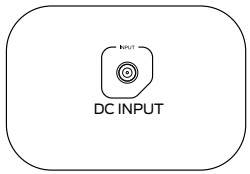

Connect to "DC INPUT" port

Step 2:

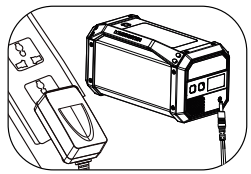

Plug-in to a wall outlet.

B. How to recharge the product with a car adapter:

1. Connect the “DC connector adapter” to the car charger (see below image), then insert it into the charging “INPUT” port.

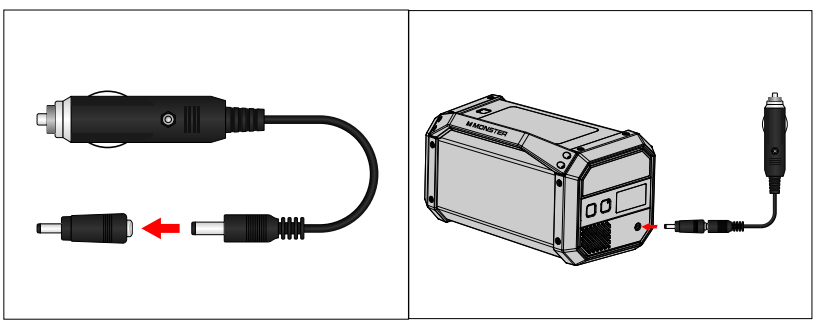

2. Plug it into a 12V cigarette lighter socket of the vehicle.

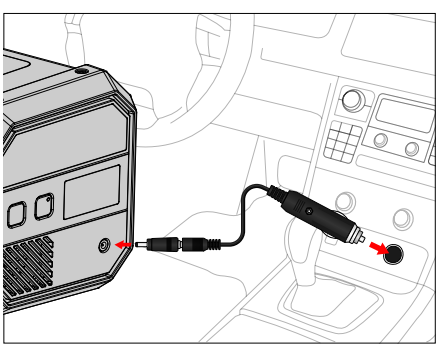

C. How to recharge the product with solar panel (not included):

1. Place the solar panel in direct sunlight. Do not expose the power station to direct sunlight or wet condition.
2. Connect the solar panel by the adapter (not included) to recharge the product.

SOLAR PANEL

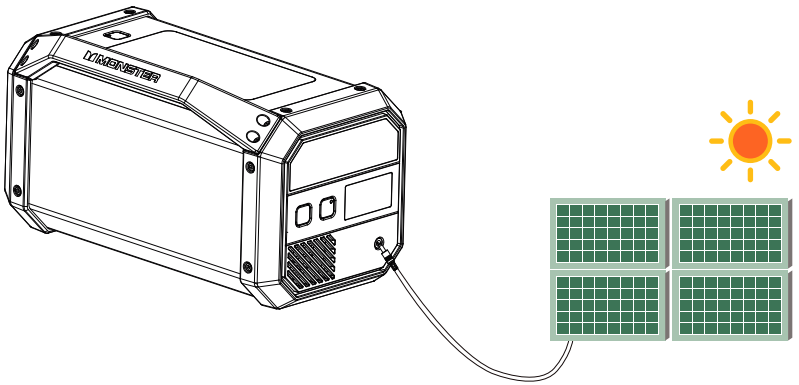

WHAT'S IN THE BOX ?

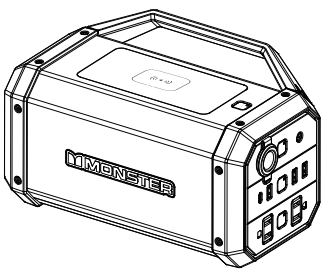

Unit

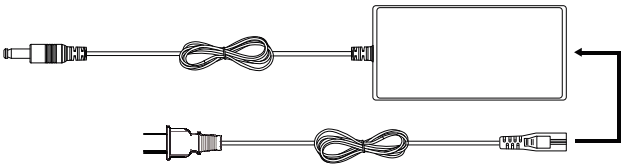

AC Adapter

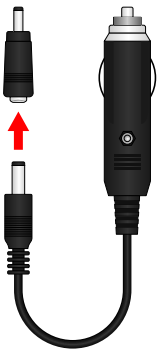

Car Adapter

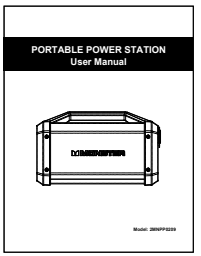

User Manual

TRICKLE CHARGE INSTRUCTIONS

How to operate the “trickle charge” feature?

1. To save power while recharging the vehicle battery, please make sure vehicle electronic appliances are OFF, for example: AC, FM, Speaker, lights etc.

2. Press the “DC ON/OFF” button to turn on the DC output feature.

3. Connect the car charger cable to the “DC” output port (see below image) , then insert the other end into the 12V cigarette lighter socket of the vehicle.

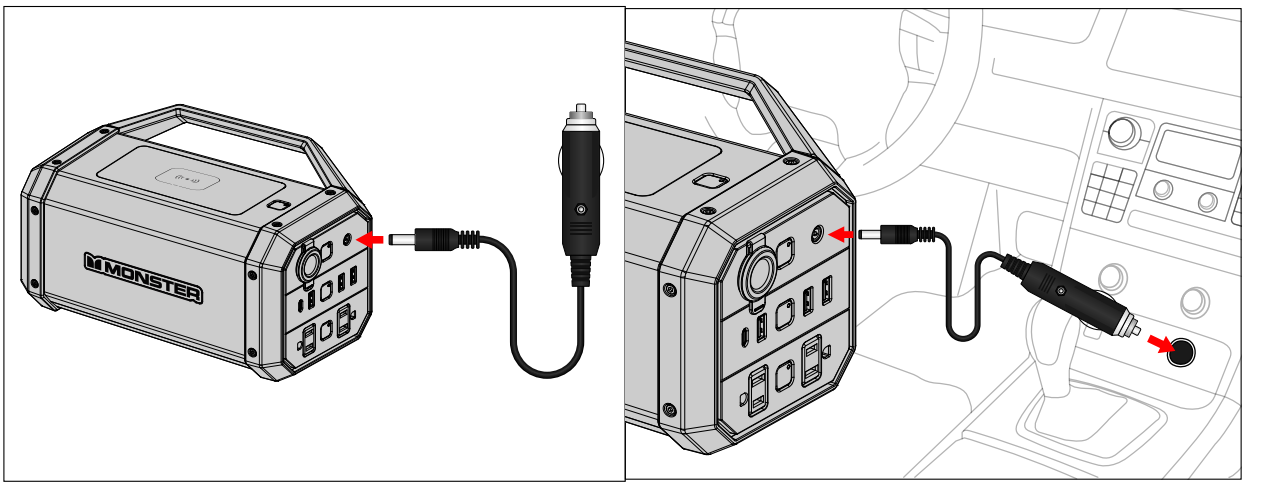

4. The product will start to charge the vehicle battery, it will take about 30 minutes (depends on the vehicle battery size and the power state of the discharged battery) for the vehicle to get enough power to jumpstart.

USAGE AND HANDLING GUIDELINES

(1) If the product is stored for more than 3 months, please recharge the product for maximum performance.

(2) Using a charger produced by non-OEM manufacturing, may cause damage to this power station.

(3) This product is not allowed to be near a heated source.

(4) Please use approved accessories from factory.

(5) Do not use this product beyond the rated load.

(6) Use this product in a well-ventilated environment.

(7) Do not store or use it in a place exposed to direct sunlight or near heating appliances.

(8) Do not attempt to open the device to avoid the danger of electric shock and fire.

WARNINGS

This device is not intended for use by unsupervised children.

Do not use as a toy.

Do not let the equipment get wet.

Do not immerse the device in water.

Do not expose the device to high temperatures.

If battery leakage occurs, and if skin or eye accidentally got contact, rinse immediately with water and seek medical advice.

DISCLAIMER

1. The company does not assume any responsibility for problems caused by improper operation.

2. The company does not assume any responsibility for the damage caused by self-disassembly and instinstallation.

3. If the use of a mismatched charger causes problems, the company will not bear any responsibility.

4. The company does not assume any responsibility for products that exceed the warranty period.

STATEMENT OF LIMITED WARRANTY

Our company warrants that each device 1) is free from defects in materials and workmanship and 2) conforms to our company's official Published Specifications which are available on request. The warranty period for the device starts on original date of purchased; one (1) year parts and labor for the entire unit except for the battery which has a six (6) months warranty. The date on your invoice or sales receipt is the date of purchased unless our company or your reseller informs your otherwise. Unless our company specifies otherwise, these warranties apply only in the country or region in which you purchased the device.

THESE WARRANTIES ARE YOUR EXCLUSIVE WARRANTIES AND REPLACE ALL OTHER WARRANTIES OR CONDITIONS. EXPRESS OR IMPLIED, INCLUDING BUT NOT LIMITED TO. THE IMPLIED WARRANTIES OR CONDITIONS OF MERCHANTABILITY AND FITNESS FOR A PARTICULAR PURPOSE, SOME STATES OR JURISDICTIONS DO NOT ALLOW THE EXCLUSION OF EXPRESS OR IMPLIED WARRANTIES, SO THE ABOVE EXCLUSION MAY APPLY TO YOU. IN THE EVENT, SUCH WARRANTIES ARE LIMITED IN THE DURATION TO THE WARRANTY PERIOD. NO WARRANTIES APPLY AFTER THAT PERIOD. SOME STATES ORJURISDICTIONS DO NOT ALLOW LIMITATIONS ON HOW LONG AN IMPLIED WARRANTY LASTS, SO THE ABOVE LIMITATION MAY NOT APPLY TO YOU.

This warranty does not cover the following:

- failure resulting from misuse, accident, modification, unsuitable physical or operating environment, or improper maintenance by you.
- failure caused by a product for which our company is not responsible; and any non our company approved products.
- the warranty is voided by removal or alternation of identifications labels on the device or its parts.
- for warranty claims or repair. please contact your local reseller or authorized distributor for further information.
- any manufacture detects that are under normal operation circumstance.

FCC STATEMENT

- This device complies with Part 15 of the FCC Rules. Operation is subject to the following two conditions:
  1) This device may not cause harmful interference.
  2) This device must accept any interference received, including interference that may cause undesired operation.

- Changes or modifications not expressly approved by the party responsible for compliance could void the user's authority to operate the equipment.

- Note: This equipment has been tested and found to comply with the limits for a Class B digital device, pursuant to Part 15 of the FCC Rules.

- These limits are designed to provide reasonable protection against harmful interference in a residential installation.This equipment generates uses and can radiate radio frequency energy and, if not installed and used in accordance with the instructions, may cause harmful interference to radio communications. However, there is no guarantee that interference will not occur in a determined particular installation. If this equipment does cause harmful interference to radio or television reception, which can be by turning the equipment off and on, the user is encouraged to try to correct the interference by one or more of the following measures: Reorient or relocate the receiving antenna. Increase the separation between the equipment and receiver. Connect the equipment into an outlet on a circuit different from that to which the receiver is connected. Consult the dealer or an experienced radio/TV technician for help. FCC Radiation Exposure Statement This equipment complies with FCC radiation exposure limits set forth for an uncontrolled environment. This equipment should be installed and operated with minimum distance 15cm between the radiator & your body.

Customer Service: 1-855-464-6680

The M Monster logo, and Powered by Monster are trademarks or registered trademarks used under license of Monster, Inc.
©2022 All rights reserved. Manufactured, marketed and distributed by Lifeworks Technology Group LLC. under license.