ECOXGEAR

Quick Start USER GUIDE

ECOSTONE

Features & Operation **Models: GDI-EGST700--710**

QUICK START 1-2-3

STEP 1: Power ON your ECOSTONE
STEP 2: SEARCH your Bluetooth Connection on your Smart-device
STEP 3: PAIR & PLAY

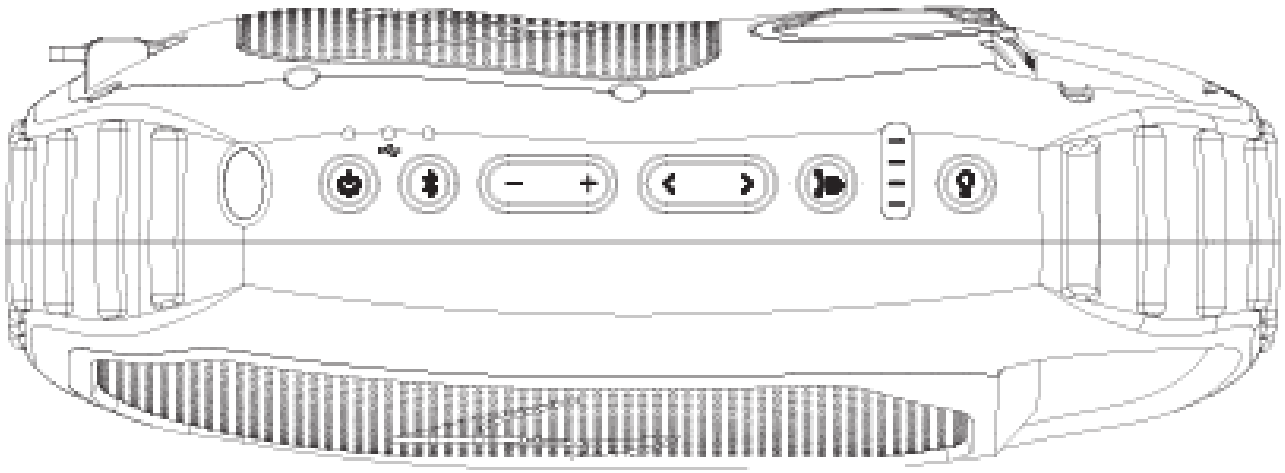

STANDBY ON/OFF	BLUETOOTH	SPEAKER VOLUME	TRACK SELECTION	PLAY PAUSE ANSWER	LED FLASHLIGHT

STEPS 1-2-3 Set Up Recommendations

STEP 1 CHARGE your ECOSTONE

Before you power on your ECOSTONE connect the USB Micro port to the USB cable and a power source to fully charge your ECOSTONE for best performance.

NOTE: Before using your ECOSTONE for the first time, charge the unit until all 4 LED battery level indicators are solid green, indicating a full charge.

- Typically approximately 3 hours of charging is required from a low to a FULL charge.
- Power source options include the USB connection to your computer or a power outlet using a USB to AC power adapter. Recommend always using the USB cable included with your ECOSTONE.

STEP 2 Power ON, Battery & LED Status Indicators

Once fully charged, press the STANDBY POWER button on the top of your ECOSTONE.
You will see the green LED light & you will hear an ascending bell tone when powering ON.

IMPORTANT: be sure the MAIN POWER switch located in the back compartment under the cap is set in the UPPER ON position. IF the switch is in the LOWER OFF position your ECOSTONE will not be able to turn ON using the Standby button.

- The LED battery level indicators are located on the top of the unit. Each bar represents 25%, 4 full LED's indicates a FULL charge
- AUDIO playback time over Bluetooth connection is approx. 12 hours at 75% max. volume

STEP 3 Bluetooth pairing & your Audio

Connecting with Bluetooth: connect to your Smart-device & play AUDIO

When your ECOSTONE is turned ON the blue LED light on the top panel will flash rapidly indicating the unit is ready to pair.

Turn on Bluetooth on your Bluetooth device (Smart-device) and set the device in pairing mode. Available Bluetooth connections shall appear. Select the ECOXGEAR speaker from the list of discovered devices on your Bluetooth device. Wait for a few seconds until the connection is completed.

When the ECOXGEAR selection is made and the Bluetooth connection is completed your ECOSTONE announces: ***"Bluetooth connected"***

Once connected, select and play your desired audio

NOTE: IF the LED is not flashing or if you wish to place your ECOSTONE in pairing mode, press and release the Bluetooth button on the top panel. Your ECOSTONE shall announce ***"pairing ready"*** when ready to pair to a new device.

NOTE: Your ECOSTONE shall sync & wirelessly pair with most Bluetooth enabled devices. The unit remembers the last device paired and will automatically search for previous connections when the speaker is turned ON or when a device comes back into Bluetooth range. If a connection is lost due to range, the speaker will look to re-establish that connection. IF Bluetooth is turned OFF on your Smart-device, the ECOSTONE will not automatically look for the device.

RECOMMENDATION: IF you are not familiar with Bluetooth pairing for your Smartphone or other Smart-device refer to the User Guide for your Smartphone to learn how to add and pair a new device (ECOSTONE for instance) to your Smartphone using Bluetooth.

NOTE: Bluetooth Pairing & Connections - Once paired, should you have an issue switching between Bluetooth connections between devices, open the Bluetooth Section within the device currently connected to the ECOSTONE and delete the Bluetooth connection. The ECOSTONE will then be available to pair & connect to an alternate Bluetooth enabled Smartphone / Audio Device

Control Buttons & Connections, Functions & Feature

TOP PANEL [on the top]

	STANDBY ON / OFF	**PRESS** the **STANDBY POWER** button to turn the ECOSTONE ON/OFF. When turned OFF the ECOSTONE remains in STANDBY POWER mode. **IMPORTANT:** Standby Power function will NOT operate when the MASTER POWER is set OFF. Master Power Switch on the back panel must be set ON for Standby & your ECOSTONE to operate.
	BLUETOOTH	When turned ON, the ECOSTONE will power on and search for your Bluetooth. Refer to STEP 3 for details
	SPEAKER VOLUME	**PRESS -** to decrease the volume & **PRESS +** to increase the volume **NOTE:** Some Bluetooth devices may require they are manually set at max. for max. level audio Your ECOSTONE will beep to indicate when the + button is pressed and maximum volume setting is reached
	TRACK SELECTION	**PRESS <** for previous track selection & **PRESS >** to advance the track selection
	PLAY PAUSE ANSWER	**PRESS** button once to **PAUSE & PLAY** song tracks and to **ANSWER** mobile **CALLS**
	LED FLASHLIGHT	**PRESS** the **LED button** once to turn **ON** the **flashlight. PRESS** a second time to turn **OFF**

BACK PANEL [under the Cap] Master Power Switch & Connections

To access the connections TURN the cap to the LEFT so the cap's arrow point lines up with "UNLOCKED" along the back edge of the unit.

STEP 1: Select "UNLOCKED"	STEP 2: Open Cap	Step 3: Access Connections
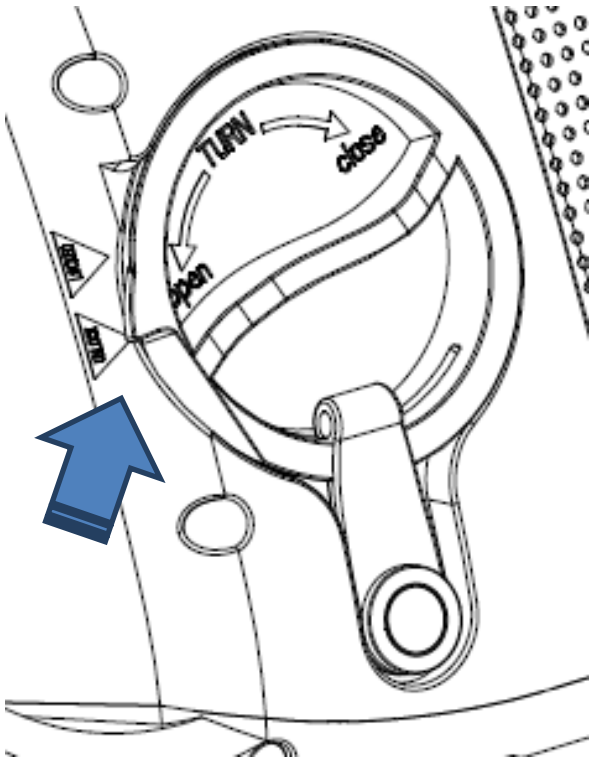	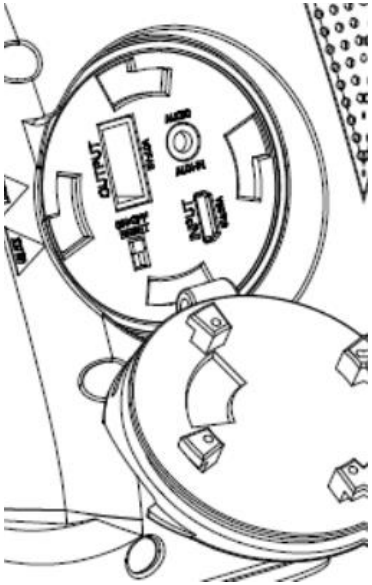	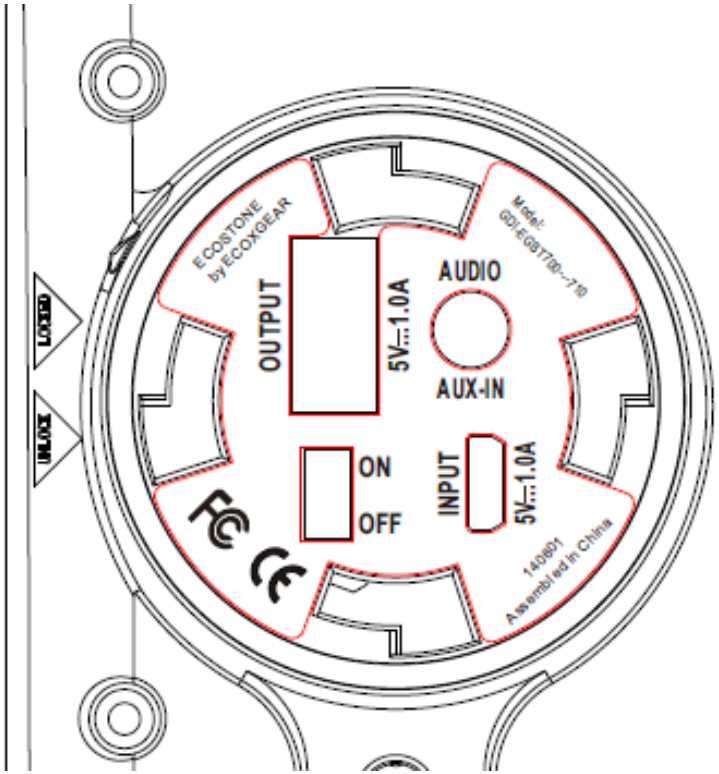

BACK PANEL [under the Cap] Master Power Switch & Connection Functions

ON OFF **MASTER POWER**	**MASTER POWER** ECOSTONE has a separate Master Power Switch and a Standby Button. The Switch MUST be set to the **ON** position to power your ECOSTONE. Once the Switch is set to ON, use the Standby Button located on the top panel to turn the unit **ON/OFF** **NOTE:** When not in use for extended periods, turn the MASTER POWER OFF to preserve battery life. **IMPORTANT:** STANDBY POWER function will NOT operate when the MASTER POWER is set OFF
OUTPUT **5V 1A**	**USB OUTPUT** Connect your devices' USB cable to connect to the USB OUTPUT (5V…1A) connection in order to charge your device. Connect to the USB OUTPUT port to charge your personal device. Use the USB cable included with your personal device. **NOTE:** Charging rates are similar to the charging rate when connected to the USB of a desktop PC. Typical charge time is approx. 3hrs from low to full for most Smartphones however charge times will vary depending on the device being charged, the device's battery specs., and the device features. In some instances your personal device may not indicated charge is in process **CAUTION:** Do NOT charge if unit and/or connections are wet or damp
INPUT **5V 1A**	**USB INPUT** Connect your ECOSTONE to the USB micro INPUT using the USB cable to charge your ECOSTONE **RECOMMENDATION:** Use the USB cable included with the ECOSTONE. **NOTE:** Typical charge time from low to full charge is up to approx. 5 hours. **NOTE:** ECOSTONE can charge while playing audio. ECOSTONE can charge your device while playing audio. Battery playtime shall be reduced depending on the time and size of the device charging while connected to your ECOSTONE. **CAUTION:** Do NOT charge if unit and/or connections are wet or damp
AUDIO **AUX IN**	**AUDIO AUX IN** Connect an audio device using the 3.5mm cable connection on the AUDIO AUX IN as an alternative to a Bluetooth connection to your ECOSTONE. **NOTE:** Volume level must be controlled from the audio device when connected to AUX IN connection.

BACK PANEL [CAP CLOSED & LOCKED]

IMPORTANT:

IF the cap on the back panel is not properly closed, the unit is NOT watertight.

To ensure the unit is watertight & waterproof, **ALWAYS CLOSE the CAP PROPERLY**

TURN the cap to the RIGHT so the cap's arrow point lines up with **"LOCKED"** along the back edge of the unit.

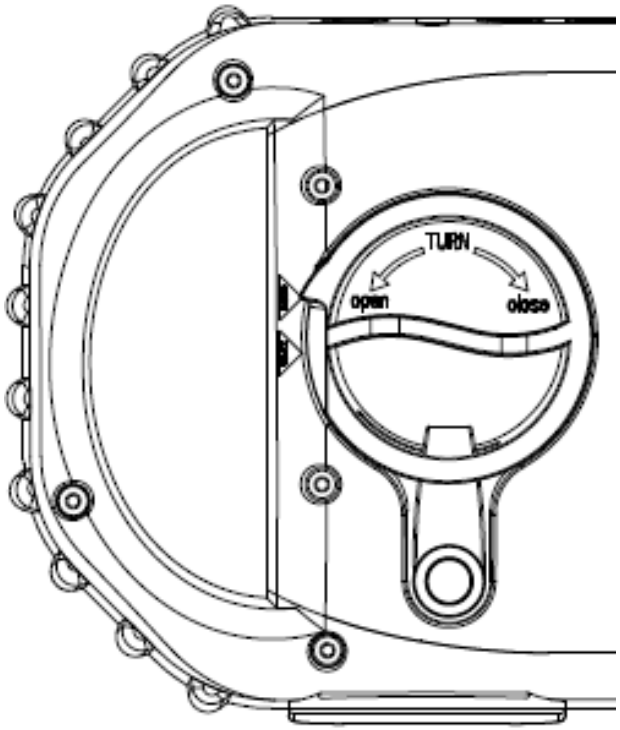

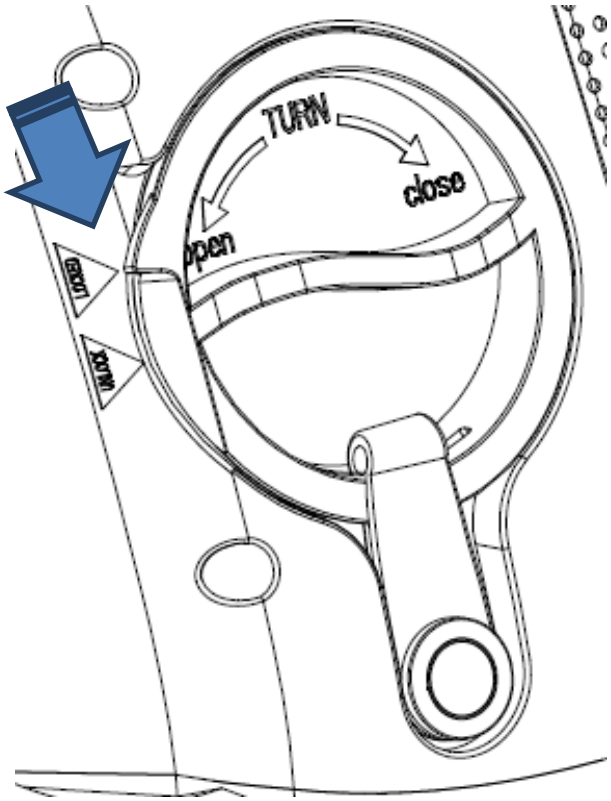

Quick Start USER GUIDE

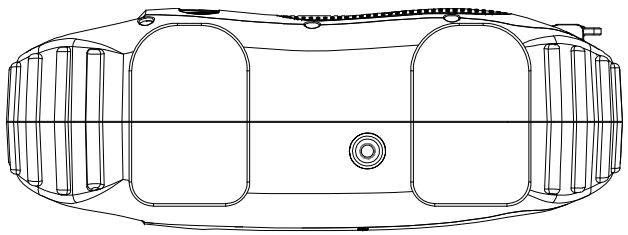

BOTTOM VIEW: ¼” attachment point for use with tripod stand or suction cup mounts (available separately)

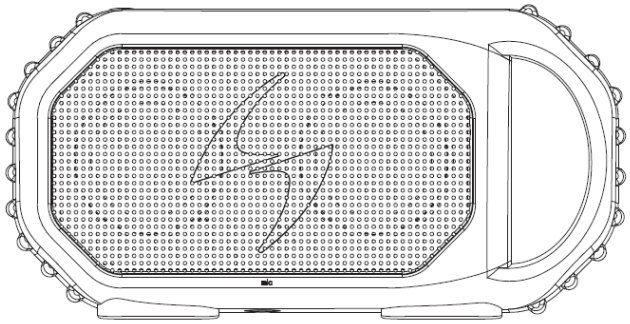

FRONT VIEW: carrying handle & grill

SPECIFICATIONS

Unit Size / Weight:	3.8” x 12.3” x 7.0“ / 41 ounces
Output Power:	RMS 24W (12 Watt x2 speakers/ 4 ohms)
S/N Ratio:	88db +/- 3dB
Power Source:	3.7V, 2800mAh Lithium Polymer Battery
Playtime:	12+ hours from full charge at 75% vol. level
Recommended Storage (Battery) Temperature:	59°F / 15°C
US Military Certification:	MIL-STD 810G
Mount Attachment Point:	1/4" diameter
Frequency Range:	125Hz-18,000Hz
Bluetooth:	Bluetooth® CSR 4.0
Charging Options:	USB to AC adapter or Computer
Charging Time:	Approximately 3 hours
Operating Temperature:	23°F to 104°F
Dust/Waterproof Rating:	IPX68

IN THE BOX

- ECOSTONE unit
- USB Cable
- AC (5V, 1A) Wall Outlet Power Adapter
- Carabineer Clip
- User Guide

FCC STATEMENT:

This device complies with Part 15 of the FCC Rules. Operation is subject to the following two conditions:

(1) This device may not cause harmful interference, and

(2) This device must accept any interference received, including interference that may cause undesired operation.

Warning: Changes or modifications not expressly approved by the party responsible for compliance could void the user's authority to operate the equipment.

NOTE: This equipment has been tested and found to comply with the limits for a Class B digital device, pursuant to Part 15 of the FCC Rules. These limits are designed to provide reasonable protection against harmful interference in a residential installation.
This equipment generates uses and can radiate radio frequency energy and, if not installed and used in accordance with the instructions, may cause harmful interference to radio communications. However, there is no guarantee that interference will not occur in a particular installation. If this equipment does cause harmful interference to radio or television reception, which can be determined by turning the equipment off and on, the user is encouraged to try to correct the interference by one or more of the following measures:

Reorient or relocate the receiving antenna.
Increase the separation between the equipment and receiver.
Connect the equipment into an outlet on a circuit different from that to which the receiver is connected.
Consult the dealer or an experienced radio/TV technician for help.

FCC Radiation Exposure Statement:

This equipment complies with FCC radiation exposure limits set forth for an uncontrolled environment. This equipment should be installed and operated with minimum distance 20cm between the radiator & your body.

Product Use and Protection: **Read and Follow all Instructions. Use only as intended.**

The ECOXGEAR Bluetooth speaker is intended to be used indoors or outdoors and in land or water environments. The speaker has been tested to IPX7 waterproofing standards which means the speaker can be submerged in water up to 3 feet of water for 30 minutes without any damage. However, the speaker is not intended for constant underwater use.

Always make sure the cap(s) / covers(s) are clean, free from sand or debris and correctly fitted. The speaker will only meet IPX7 ratings if all rubber seals, gaskets and cover(s) / cap(s) are in place. If you notice a muffling of audio after submersion gently shake the unit to clear excess water. If your speaker is exposed to salt water clean it thoroughly after use with fresh water.

The USB cables, power adapters and unit with in improperly fitted backdoor are NOT waterproof.

To prevent fire or shock, do not attempt to charge this unit if it is wet or you suspect water has entered the unit. In this situation, please return the unit to Grace Digital for a free assessment. If we have found that the unit has carried water we will repair or replace the unit free of charge.

SAFETY ADVISORY & WARNING: **Read and Follow all Instructions. Use only as intended.**

CAUTION: Do NOT open to repair. A qualified technician must carry out repair work.

CAUTION: ATTENTION: Do NOT charge while the unit is wet. Towel dry the unit AND make sure all connections are dry BEFORE plugging in the charging connector. Failure to do so may result in electrical damage to the unit and may void the warranty.

WARNING: This product may contain chemicals listed in Proposition 65 (http//www.oehha.ca.gov/prop65/prop65_list/Newlist.html)

WARNING: ECOSTONE has a built-in Lithium Ion battery. The battery must NOT be used in or near an open heat source or excessive heat.

WARNING: Danger of explosion if batter is incorrectly replaced. Replace only with the same or equivalent type.

ATTENTION: Do NOT dispose of in a landfill. Contact Grace Digital at http://www.gracesupport.com/ or a certified recycling agent to dispose of the unit.

ATTENTION: AC adaptor is a device forming a part of the main plug therefore the AC adaptor can always be readily disconnected from AC socket-outlet.

SAFETY

This product has a limited life span of use and should be replaced when it shows obvious signs of wear.

Do not modify or remove any original component parts of the speaker. Doing so could cause damage to the unit allowing water to ingress. A unit with water ingress should not be charged due to potential risk of fire or shock.

Do not attempt to mount the unit except with the approved ECOXGEAR mounts. Doing so could cause damage to the unit allowing water to ingress. A unit with water ingress should not be charged due to potential risk of fire or shock.

Please exercise care and good judgment when using your ECOXGEAR speaker. Audio levels should be appropriate to your environment, comply with all local regulations, and always ensure that you can hear and be aware of any potential hazards around you.

You should always

1) Use the ECOXGEAR speaker in accordance with any music or noise rules and regulations.
2) Use the proper ECOXGEAR mounts if you intend to mount the unit.
3) Properly seal the ECOXGEAR **prior and after** each use when in humid or water environments to avoid water damage to the internal components. Salt water / air is particular corrosive. Always make sure that the gasket are sealed when in salt water environment and the unit properly rinsed off after use.
4) Properly clean the ECOXGEAR and ensure the gaskets have no sand, dirt or water on them prior to storage or removing the back cover.
5) Store your unit with all caps properly sealed to avoid long term internal moisture damage inside your unit.
6) Completely dry and clean your ECOXGEAR prior to attempting to charge the unit.
7) Return the ECOXGEAR to Grace Digital if you suspect water ingress into the unit or if the unit has experienced a severe impact that may have affected the integrity of the unit to take on water.

You should never

1) Charge your ECOXGEAR if you suspect water has entered the device. Charging a device with water inside could be potential hazardous and cause fire or a spark.
2) Use your ECOXGEAR if you have dropped it or thrown it against a hard surface which may have destroyed the integrity of the speakers, housings or gaskets. In the event of a severe impact to your unit please return the unit to Grace Digital to review for potential damage.
3) Open the auxiliary door in a water environment. This could cause water to ingress into the unit which could potentially be hazardous and cause a fire or a spark.
4) Connect a device to the auxiliary input jack when in a water environment. The auxiliary jack should only be used in a dry environment.
5) Attempt to fix, repair your ECOXGEAR unit. Please send it back to Grace Digital for any assessments and repairs.

CARE, MAINTENANCE & PRECAUTIONS

1) The unit is waterproof only when the RUBBER CAP is properly closed.
2) Close the CAP properly before use, see 'diagram 4' for reference. If the unit is placed in water without the cap properly closed, water may enter into the unit and void your warranty.
3) Dry unit completely before opening the cap. Do NOT open the cap if wet or in a wet environment.
4) Do NOT apply excessive force to any surfaces of the unit when wet or in a wet environment.
5) Do NOT use or store the unit in places with high temperature.
6) AVOID prolonged exposure to ultraviolet radiation (UV sunlight) and strong magnetic fields.
7) Periodically check the rubber seal for premature wear.
8) Periodically clean the rubber with a soft moist cloth and ensure no objects such as dirt, hair, sand are on the rubber seal ring. Do NOT use any oily solvent or chemicals for cleaning.
9) Rinse off the unit with tap water after use in salt water or swimming pool.
10) Power and/or charge the built-in rechargeable battery for portable use by connecting the USB cord to a computer USB connection or to the AC outlet using the AC-to-USB cord 5V, 1A power adapter intended for use with the unit.
11) Noise and audio distortion may occur when the batteries are nearing end of charge.
12) Do NOT remove the built-in battery. Do NOT remove the grill covers.

LIMITED MANUFACTURER'S WARRANTY

The ECOSTONE is covered by a 1 year limited warranty that covers defects in workmanship and / or materials for a period of 1 year from original purchase date. This warranty does not apply to any products which have been abused, neglected, modified or used for a purpose other than the one for which they were manufactured. Please refer to the above care and maintenance instructions for suggested care details. The warranty is valid only for the original owner who purchases the unit from an authorized dealer. Transfers do not qualify for warranty protection. Grace Digital reserves the right to replace any out-of-stock or discontinued product with a comparable product. Discontinued products may not be available for warranty replacement. Any contents are NOT covered by the limited manufacturer's warranty. Warranty terms may be revised without notification at the discretion of the manufacturer. Please visit www.ecoxgear.com for additional product & warranty information.

ECOSTONE by ECOXGEAR, a division of Grace Digital Inc., San Diego, California.

Visit us on Facebook

ECOSTONE by ECOXGEAR, a division of Grace Digital Inc. Designed in California, Assembled in China. All rights reserved. The Trademark BlackBerry® is owned by Research In Motion Limited and is registered in the United States and may be pending or registered in other countries. Grace Digital Inc. is not endorsed, sponsored, affiliated with or otherwise authorized by Research In Motion Limited. iPod/ iTunes / iPhone / iPod Touch are a trademark Apple Inc. registered in the U.S. and other countries. Android and Android Market™ are trademarks of Google, Inc. Use of this trademark is subject to Google permission