Test Lab
Cert 2951.01

FCC TEST REPORT

(DFS)

Product:	LTE Smartphone
Model No.:	XP7700
FCC ID:	WYPL14V012AA
Applicant:	Sonim Technologies, Inc.
Address:	1825 S. Grant St., Suite 200., San Mateo,CA,94402
Manufacturer:	Sonim Technologies (Shenzhen) Limited
Address:	Block B, 2nd Floor, Building #2, Daqian Industrial Park, Longchang Road,67 District Baoan, Shenzhen, Guangdong, P.R.China
Prepared by:	Bureau Veritas Shenzhen Co., Ltd. Dongguan Branch
Lab Location:	No. 34, Chenwulu Section, Guantai Rd., Houjie Town, Dongguan City, Guangdong 523942, China
TEL:	+86 769 8593 5656
FAX:	+86 769 8593 1080
E-MAIL:	customerservice.dg@cn.bureauveritas.com
Report No.:	RF150522N017-7
Received Date:	May 22, 2015
Test Date:	May 22, 2015 ~ May 27, 2015
Issued Date:	May 28, 2015

This report should not be used by the client to claim product certification, approval, or endorsement by A2LA or any government agencies.

Any copying or replication of this report to or for any other person or entity, or use of our name or trademark, is permitted only with our prior written permission. This report sets forth our findings solely with respect to the test samples identified herein. The results set forth in this report are not indicative or representative of the quality or characteristics of the lot from which a test sample was taken or any similar or identical product unless specifically and expressly noted. Our report includes all of the tests requested by you and the results thereof based upon the information that you provided to us. You have 60 days from date of issuance of this report to notify us of any material error or omission caused by our negligence, provided, however, that such notice shall be in writing and shall specifically address the issue you wish to raise. A failure to raise such issue within the prescribed time shall constitute your unqualified acceptance of the completeness of this report, the tests conducted and the correctness of the report contents. Unless specific mention, the uncertainty of measurement has been explicitly taken into account to declare the compliance or non-compliance to the specification.

TABLE OF CONTENTS

RELEASE CONTROL RECORD **4**

1 CERTIFICATION **5**

2 EUT INFORMATION **6**

2.1 OPERATING FREQUENCY BANDS AND MODE OF EUT 6
2.2 EUT SOFTWARE AND FIRMWARE VERSION 6
2.3 DESCRIPTION OF AVAILABLE ANTENNAS TO THE EUT 6
2.4 EUT MAXIMUM CONDUCTED POWER 7
2.5 EUT MAXIMUM EIRP POWER 8
2.6 TRANSMIT POWER CONTROL (TPC) 9
2.7 STATEMENT OF MAUNFACTURER 9

3 U-NII DFS RULE REQUIREMENTS **10**

3.1 WORKING MODES AND REQUIRED TEST ITEMS 10
3.2 TEST LIMITS AND RADAR SIGNAL PARAMETERS 11

4 TEST & SUPPORT EQUIPMENT LIST **15**

4.1 TEST INSTRUMENTS 15
4.2 DESCRIPTION OF SUPPORT UNITS 15

5 TEST PROCEDURE **16**

5.1 BVADT DFS MEASUREMENT SYSTEM: 16
5.2 CALIBRATION OF DFS DETECTION THRESHOLD LEVEL: 17
5.3 DEVIATION FROM TEST STANDARD 18
5.4 CONDUCTED TEST SETUP CONFIGURATION 18
5.4.1 CLIENT WITHOUT RADAR DETECTION MODE 18

6 TEST RESULTS **19**

6.1 SUMMARY OF TEST RESULTS 19
6.2 DETAILED TEST RESULTS 19
6.2.1 TEST MODE: DEVICE OPERATING IN CLIENT WITHOUT RADAR DETECTION MODE 19
6.2.2 DFS DETECTION THRESHOLD 20

6.2.3 CHANNEL CLOSING TRANSMISSION AND CHANNEL MOVE TIME 21
6.2.4 NON- OCCUPANCY PERIOD 22
6.2.5 NON-ASSOCIATED TEST 24
6.2.6 NON- CO-CHANNEL TEST 24

7 APPENDIX A - MODIFICATIONS RECORDERS FOR ENGINEERING CHANGES TO THE EUT BY THE LAB 25

RELEASE CONTROL RECORD

ISSUE NO.	REASON FOR CHANGE	DATE ISSUED
RF150522N017-7	Original release	May 28, 2015

1 CERTIFICATION

PRODUCT:	LTE Smartphone
BRAND NAME:	Sonim
MODEL NO.:	XP7700
APPLICANT:	Sonim Technologies, Inc.
TESTED:	May 22, 2015 ~ May 27, 2015
TEST SAMPLE:	Identical Prototype
STANDARDS:	**FCC Part 15, Subpart E, Section 15.407** **FCC 06-96**

The above equipment has been tested by **Bureau Veritas Shenzhen Co., Ltd. Dongguan Branch** and found compliance with the requirement of the above standards. The test record, data evaluation & Equipment Under Test (EUT) configurations represented herein are true and accurate accounts of the measurements of the sample's EMC characteristics under the conditions specified in this report.

PREPARED BY : _____ , **DATE:** May 28, 2015
(Yuqiang Yin / Engineer)

APPROVED BY : _____ , **DATE:** May 28, 2015
(Glyn He / Supervisor)

2 EUT INFORMATION

2.1 OPERATING FREQUENCY BANDS AND MODE OF EUT

TABLE 1: OPERATING FREQUENCY BANDS AND MODE OF EUT

OPERATIONAL MODE	OPERATING FREQUENCY RANGE	
	5250~5350MHz	5470~5725MHz
Client without radar detection and ad hoc function	V	V

2.2 EUT SOFTWARE AND FIRMWARE VERSION

TABLE 2: THE EUT SOFTWARE/FIRMWARE VERSION

PLATFORM	NO.	PRODUCT	MODEL NO.	SOFTWARE/FIRMWARE VERSION
Android	1	LTE Smartphone	XP7700	7E.0.0-00-4.4.4-16.01.01

2.3 DESCRIPTION OF AVAILABLE ANTENNAS TO THE EUT

TABLE 3: ANTENNA LIST

ANT	BRAND	MODEL	CONNECTOR TYPE	ANT TYPE	FREQUENCY RANGE (MHZ TO MHZ)	NET GAIN(dBi)	CABLE LOSS(dBi)
1	N/A	N/A	N/A	PIFA	5250 - 5350	1.3	0
					5470 - 5725	1	0

2.4 EUT MAXIMUM CONDUCTED POWER

IEEE 802.11a

ANT SET.	FREQUENCY BAND (MHz)	AVERAGE POWER	
		OUTPUT POWER(dBm)	OUTPUT POWER(mW)
1	5250~5350	8.89	7.745
1	5470~5725	9.98	9.954

IEEE 802.11n HT20

ANT SET.	FREQUENCY BAND (MHz)	AVERAGE POWER	
		OUTPUT POWER(dBm)	OUTPUT POWER(mW)
1	5250~5350	8.85	7.674
1	5470~5725	9.78	9.506

IEEE 802.11n HT40

ANT SET.	FREQUENCY BAND (MHz)	AVERAGE POWER	
		OUTPUT POWER(dBm)	OUTPUT POWER(mW)
1	5250~5350	8.84	7.656
1	5470~5725	9.58	9.078

2.5 EUT MAXIMUM EIRP POWER

IEEE 802.11a

ANT SET.	FREQUENCY BAND (MHz)	AVERAGE POWER	
		OUTPUT POWER(dBm)	OUTPUT POWER(mW)
1	5250~5350	10.19	10.447
1	5470~5725	10.98	**12.531**

IEEE 802.11n HT20

ANT SET.	FREQUENCY BAND (MHz)	AVERAGE POWER	
		OUTPUT POWER(dBm)	OUTPUT POWER(mW)
1	5250~5350	10.15	10.351
1	5470~5725	10.78	11.967

IEEE 802.11n HT40

ANT SET.	FREQUENCY BAND (MHz)	AVERAGE POWER	
		OUTPUT POWER(dBm)	OUTPUT POWER(mW)
1	5250~5350	10.14	10.328
1	5470~5725	10.58	11.429

2.6 TRANSMIT POWER CONTROL (TPC)

U-NII devices operating in the 5.25-5.35 GHz band and the 5.47-5.725 GHz band shall employ a TPC mechanism. The U-NII device is required to have the capability to operate at least 6 dB below the mean EIRP value of 30 dBm. A TPC mechanism is not required for systems with an EIRP of less than 500 mW.

Maximum EIRP of this device is 12.531mW which less than 500mW, therefore it's not require TPC function.

2.7 STATEMENT OF MAUNFACTURER

This device (Client) is without radar detection, then the manufacturer statement confirming that information regarding the parameters of the detected Radar Waveforms is not available to the end user. And the device doesn't have Ad Hoc mode on DFS frequency band.

3 U-NII DFS RULE REQUIREMENTS

3.1 WORKING MODES AND REQUIRED TEST ITEMS

The manufacturer shall state whether the UUT is capable of operating as a Master and/or a Client. If the UUT is capable of operating in more than one operating mode then each operating mode shall be tested separately. See tables 1 and 2 for the applicability of DFS requirements for each of the operational modes.

TABLE 6: APPLICABILITY OF DFS REQUIREMENTS PRIOR TO USE A CHANNEL

REQUIREMENT	OPERATIONAL MODE		
	MASTER	CLIENT WITHOUT RADAR DETECTION	CLIENT WITH RADAR DETECTION
Non-Occupancy Period	✓	✓	✓
DFS Detection Threshold	✓	Not required	✓
Channel Availability Check Time	✓	Not required	Not required
Uniform Spreading	✓	Not required	Not required
U-NII Detection Bandwidth	✓	Not required	✓

TABLE 7: APPLICABILITY OF DFS REQUIREMENTS DURING NORMAL OPERATION

REQUIREMENT	OPERATIONAL MODE		
	MASTER	CLIENT WITHOUT RADAR DETECTION	CLIENT WITH RADAR DETECTION
DFS Detection Threshold	✓	Not required	✓
Channel Closing Transmission Time	✓	✓	✓
Channel Move Time	✓	✓	✓
U-NII Detection Bandwidth	✓	Not required	✓

3.2 TEST LIMITS AND RADAR SIGNAL PARAMETERS

DETECTION THRESHOLD VALUES

TABLE 8: DFS DETECTION THRESHOLDS FOR MASTER DEVICES AND CLIENT DEVICES WITH RADAR DETECTION

MAXIMUM TRANSMIT POWER	VALUE (SEE Note 1 and 2)
≥ 200 milliwatt	-64 dBm
< 200 milliwatt	-62 dBm
Note 1: This is the level at the input of the receiver assuming a 0 dBi receive antenna. **Note 2:** Throughout these test procedures an additional 1 dB has been added to the amplitude of the test transmission waveforms to account for variations in measurement equipment. This will ensure that the test signal is at or above the detection threshold level to trigger a DFS response.	

TABLE 9: DFS RESPONSE REQUIREMENT VALUES

PARAMETER	VALUE
Non-occupancy period	Minimum 30 minutes
Channel Availability Check Time	60 seconds
Channel Move Time	10 seconds See Note 1.
Channel Closing Transmission Time	200 milliseconds + an aggregate of 60 milliseconds over remaining 10 second period. See Notes 1 and 2.
U-NII Detection Bandwidth	100% of the UNII transmission power bandwidth. See Note 3.

Note 1: The instant that the Channel Move Time and the Channel Closing Transmission Time begins is as follows:

• For the Short Pulse Radar Test Signals this instant is the end of the Burst.

• For the Frequency Hopping radar Test Signal, this instant is the end of the last radar Burst generated.

• For the Long Pulse Radar Test Signal this instant is the end of the 12 second period defining the Radar Waveform.

Note 2: The Channel Closing Transmission Time is comprised of 200 milliseconds starting at the beginning of the Channel Move Time plus any additional intermittent control signals required to facilitate a Channel move (an aggregate of 60 milliseconds) during the remainder of the 10 second period. The aggregate duration of control signals will not count quiet periods in between transmissions.

Note 3: During the U-NII Detection Bandwidth detection test, radar type 1 is used and for each frequency step the minimum percentage of detection is 90 percent. Measurements are performed with no data traffic.

PARAMETERS OF DFS TEST SIGNALS

Step intervals of 0.1 microsecond for Pulse Width, 1 microsecond for PRI, 1 MHz for chirp width and 1 for the number of pulses will be utilized for the random determination of specific test waveforms.

TABLE 10: SHORT PULSE RADAR TEST WAVEFORMS

RADAR TYPE	PULSE WIDTH (µsec)	PRI (µsec)	NUMBER OF PULSES	MINIMUM PERCENTAGE OF SUCCESSFUL DETECTION	MINIMUM NUMBER OF TRIALS
0	1	1428	18	See Note 1	See Note 1
1	1	Test A: 15 unique PRI values randomly selected from the list of 23 PRI values in Table 5a ---------- Test B: 15 unique PRI values randomly selected within the range of 518-3066 μ sec, with a minimum increment of 1 μ sec, excluding PRI values selected in Test A	$\text{Roundup}\left\{\left(\frac{1}{360}\right)\cdot\left(\frac{19\cdot 10^6}{PRI_{\mu sec}}\right)\right\}$	60%	30
2	1-5	150-230	23-29	60%	30
3	6-10	200-500	16-18	60%	30
4	11-20	200-500	12-16	60%	30
Aggregate (Radar Types 1-4)				80%	120

Note 1: Short Pulse Radar Type 0 should be used for the detection bandwidth test, channel move time, and channel closing time tests.

TABLE 11: LONG PULSE RADAR TEST WAVEFORM

RADAR TYPE	PULSE WIDTH (µsec)	CHIRP WIDTH (MHz)	PRI (µsec)	NUMBER OF PULSES PER BURST	NUMBER OF BURSTS	MINIMUM PERCENTAGE OF SUCCESSFUL DETECTION	MINIMUM NUMBER OF TRIALS
5	50-100	5-20	1000-2000	1-3	8-20	80%	30

TABLE 12: FREQUENCY HOPPING RADAR TEST WAVEFORM

RADAR TYPE	PULSE WIDTH (µsec)	PRI (µsec)	PULSES PER HOP	HOPPING RATE (kHz)	HOPPING SEQUENCE LENGTH (msec)	MINIMUM PERCENTAGE OF SUCCESSFUL DETECTION	MINIMUM NUMBER OF TRIALS
6	1	333	9	0.333	300	70%	30

4 TEST & SUPPORT EQUIPMENT LIST

4.1 TEST INSTRUMENTS

TABLE 1: TEST INSTRUMENTS LIST.

DESCRIPTION & MANUFACTURER	MODEL NO.	BRAND	CALIBRATED DATE	CALIBRATED UNTIL
R&S Spectrum	FSV7	R&S	Jun. 11, 2014	Jun. 10, 2015
Signal generator	8645A	Agilent	Aug. 20, 2014	Aug. 19, 2015

4.2 DESCRIPTION OF SUPPORT UNITS

TABLE 2: SUPPORT UNIT INFORMATION.

NO.	PRODUCT	BRAND	MODEL NO.	ID	SPEC.
1	WIRELESS AC MODULE	D-Link	WMC-AC01	UZ7AP7131N	The maximum EIRP is16.9dBm, Antenna Gain is 3.428dBi

NOTE: This device was functioned as a ☒Master ☐Slave device during the DFS test.

TABLE 3: SOFTWARE/FIRMWARE INFORMATION.

NO.	PRODUCT	MODEL NO.	SOFTWARE/FIRMWARE VERSION
1	WIRELESS AC MODULE	WMC-AC01	Mon 04 Feb. 2013 (version6.30.163.13.r373323 WLTEST)

5 TEST PROCEDURE

5.1 BVADT DFS MEASUREMENT SYSTEM:

A complete BVADT DFS Measurement System consists of two subsystems: (1) the Radar Signal Generating Subsystem and (2) the Traffic Monitoring Subsystem. The control PC is necessary for generating the Radar waveforms in Table 6, 7 and 8. The traffic monitoring subsystem is specified to the type of unit under test (UUT).

CONDUCTED SETUP CONFIGURATION OF ADT DFS MEASUREMENT SYSTEM

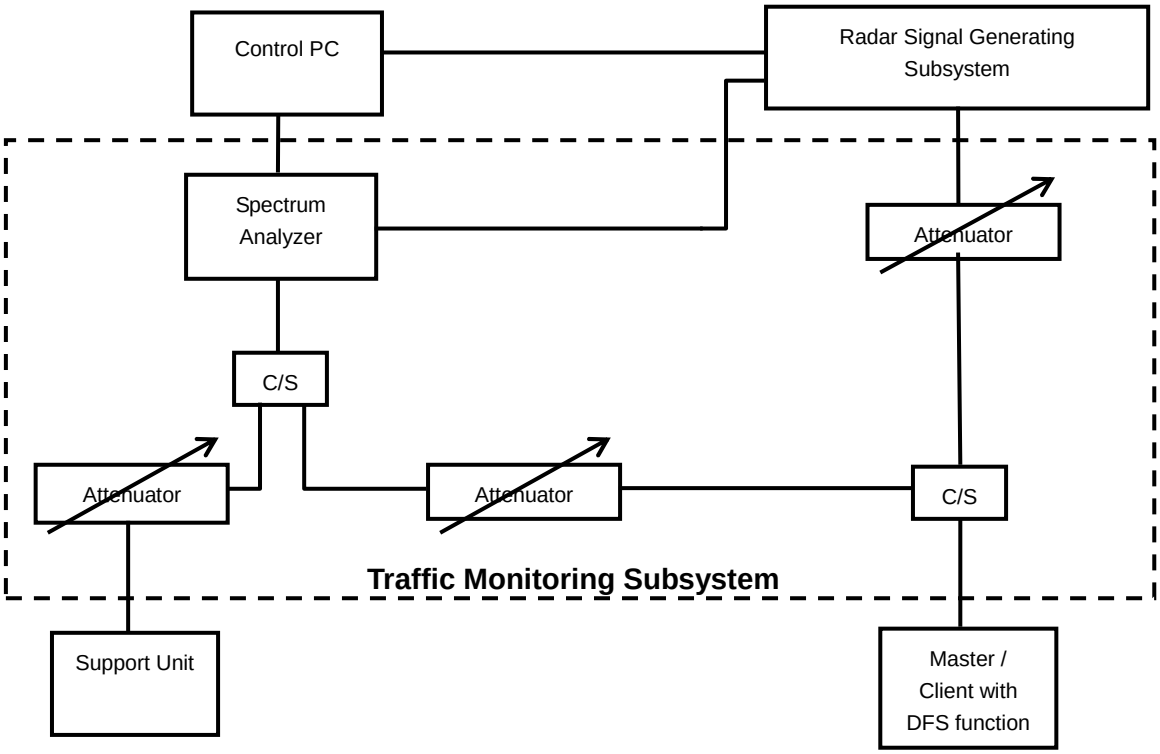

The test transmission will always be from the Master Device to the Client Device. While the Client device is set up to associate with the Master device and play the MPEG file (6 $\frac{1}{2}$ Magic Hours) from Master device, the designated MPEG test file and instructions are located at: http://ntiacsd.ntia.doc.gov/dfs/.

5.2 CALIBRATION OF DFS DETECTION THRESHOLD LEVEL:

The measured channel is 5500 MHz in 20MHz Bandwidth and 5510MHz in 40MHz Bandwidth. The radar signal was the same as transmitted channels, and injected into the antenna port of AP (master) or Client Device with Radar Detection, measured the channel closing transmission time and channel move time. The Master antenna gain is -3.428dBi and required detection threshold is -57.572dBm (= -62 +1 +3.428)dBm. The calibrated conducted detection threshold level is set to -57.572 dBm.

CONDUCTED SETUP CONFIGURATION OF CALIBRATION OF DFS DETECTION THRESHOLD LEVEL

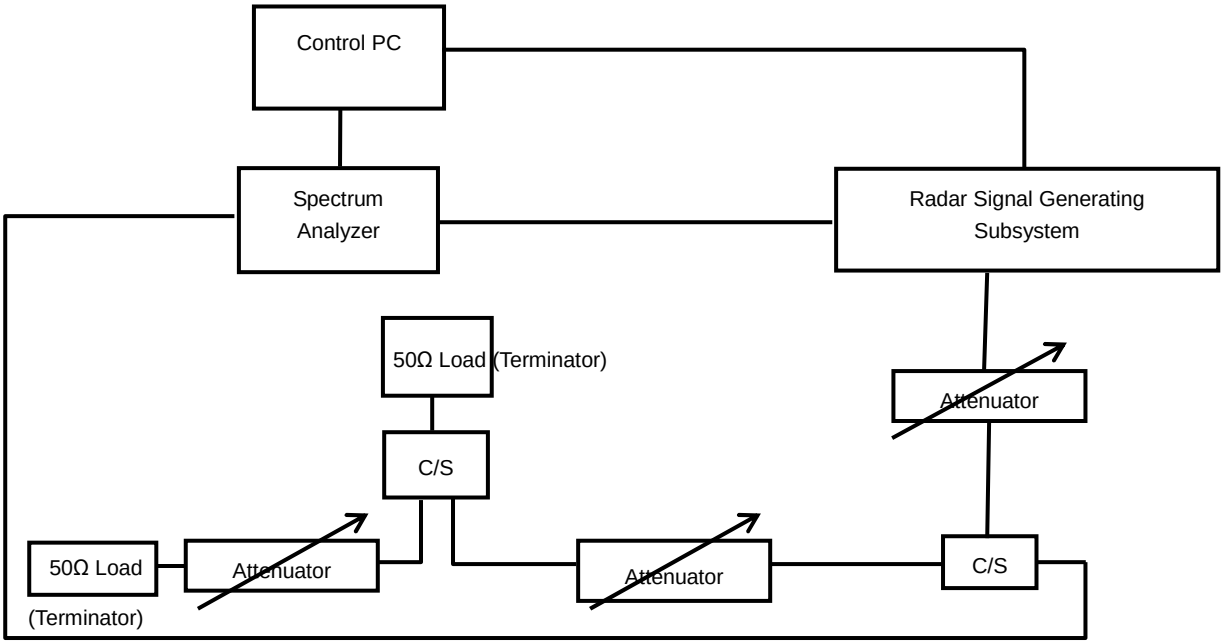

5.3 DEVIATION FROM TEST STANDARD

No deviation.

5.4 CONDUCTED TEST SETUP CONFIGURATION

5.4.1 CLIENT WITHOUT RADAR DETECTION MODE

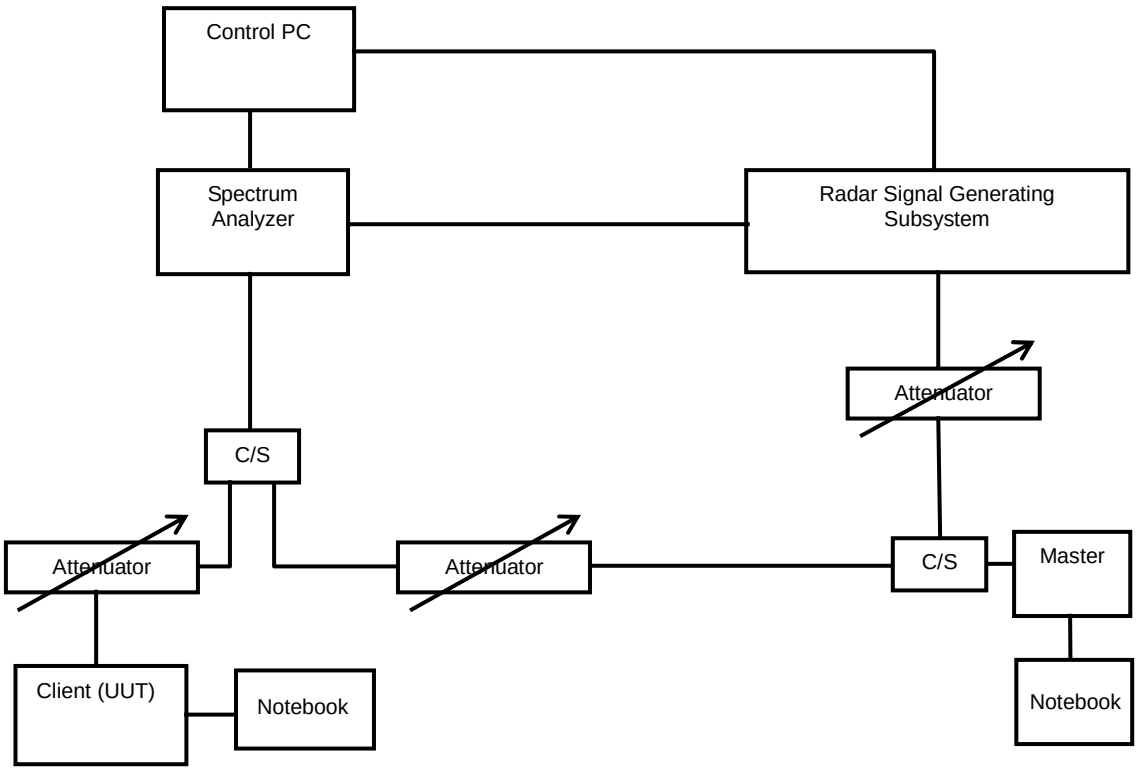

The UUT is a U-NII Device operating in Client mode without radar detection. The radar test signals are injected into the Master Device.

6 TEST RESULTS

6.1 SUMMARY OF TEST RESULTS

CLAUSE	TEST PARAMETER	REMARKS	PASS/FAIL
15.407	DFS Detection Threshold	Not Applicable	N/A
15.407	Channel Availability Check Time	Not Applicable	N/A
15.407	Channel Move Time	Applicable	Pass
15.407	Channel Closing Transmission Time	Applicable	Pass
15.407	Non- Occupancy Period	Applicable	Pass
15.407	Uniform Spreading	Not Applicable	N/A
15.407	U-NII Detection Bandwidth	Not Applicable	N/A
15.407	Non-associated test	Applicable	Pass
15.407	Non-Co-Channel test	Applicable	Pass

6.2 DETAILED TEST RESULTS

6.2.1 TEST MODE: DEVICE OPERATING IN CLIENT WITHOUT RADAR DETECTION MODE

The radar test signals are injected into the Master Device.
This test was investigated for different bandwidth (20MHz and40MHz, except the 80MHz bandwidth, because the UUT is not available). The following plots was done on 40MHz as a representative

6.2.2 DFS DETECTION THRESHOLD

The Required detection threshold is -57.572dBm (= -62 +1 +3.428)dBm. The conducted radar burst level is set to -57.572dBm.

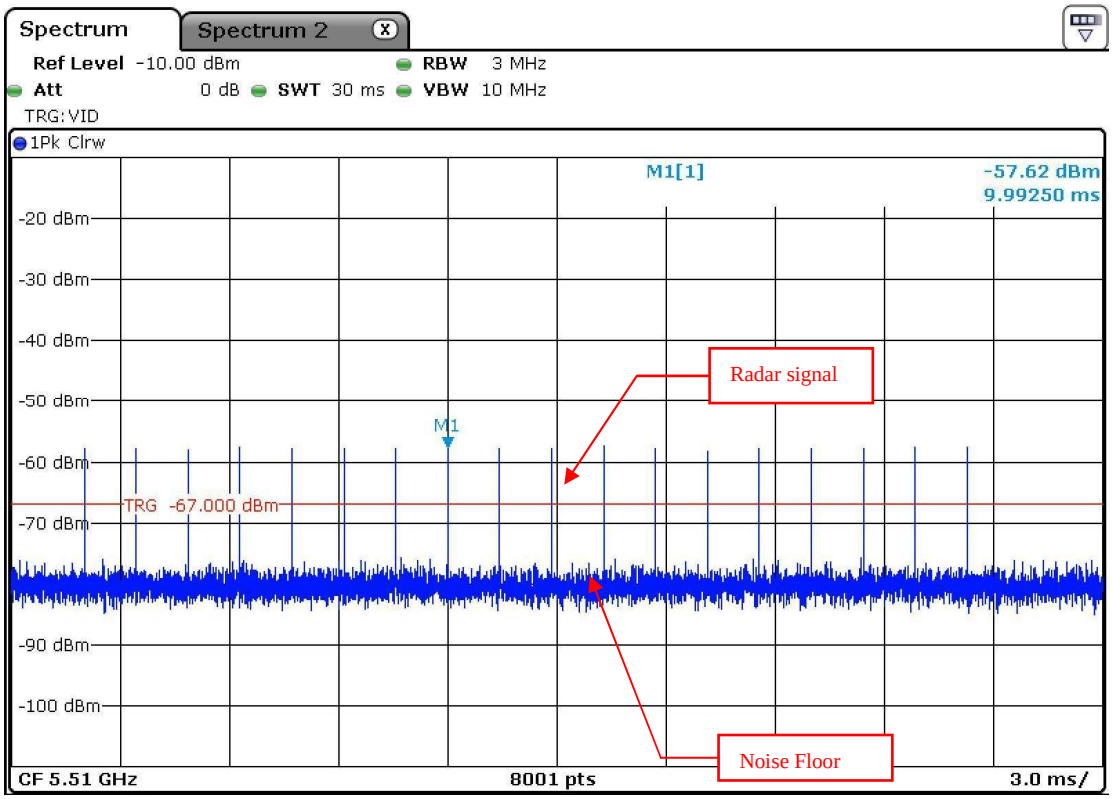

Radar Signal 1

6.2.3 CHANNEL CLOSING TRANSMISSION AND CHANNEL MOVE TIME

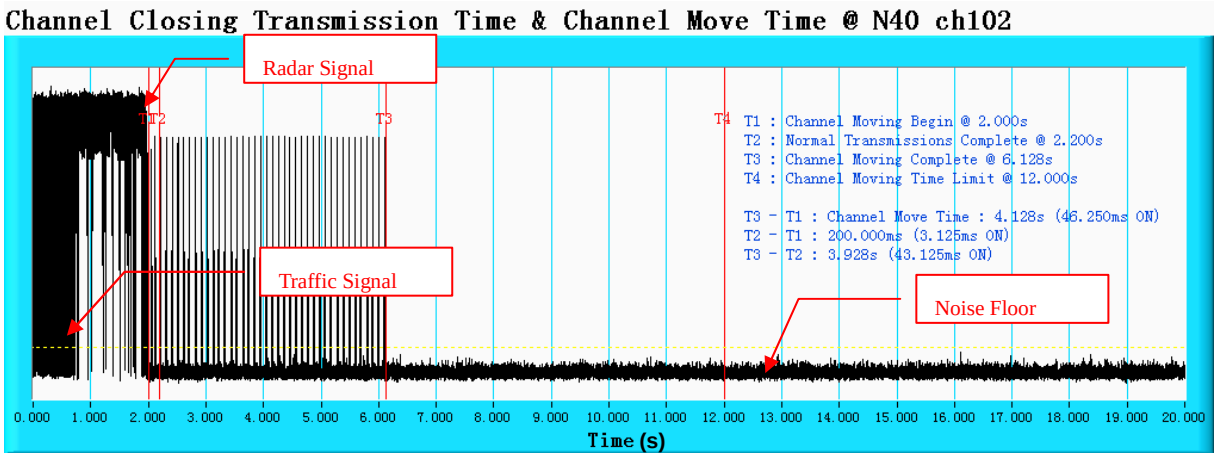

NOTE: T1 denotes the start of Channel Move Time upon the end of the last Radar burst. T2 denotes the data transmission time of 200ms from T1. T4 denotes the 10 second from T1 to observe the aggregate duration of transmissions.

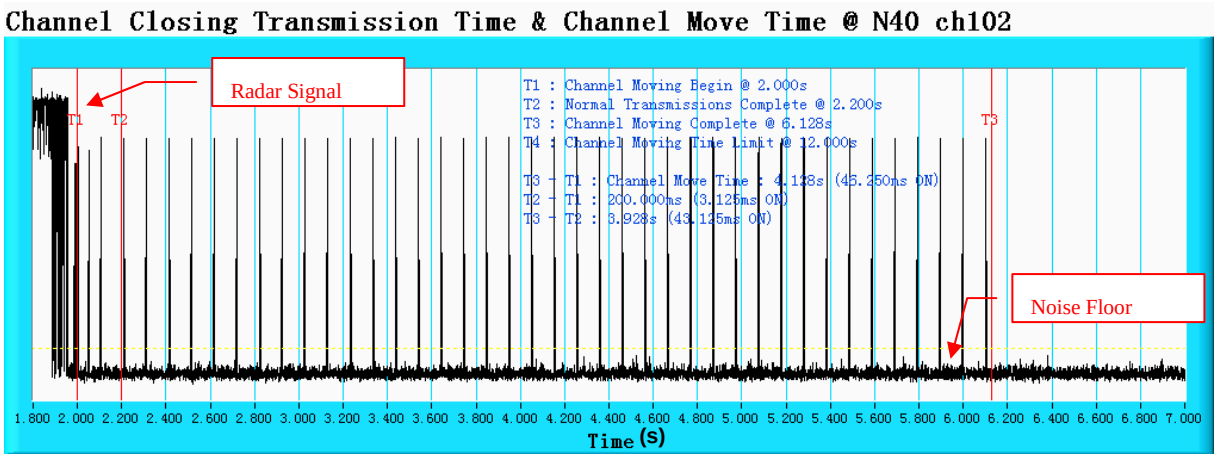

NOTE: An expanded plot for the device vacates the channel in the required 500ms.

6.2.4 NON- OCCUPANCY PERIOD

ASSOCIATED TEST

1) Test results demonstrating an associated client link is established with the master on a test frequency.

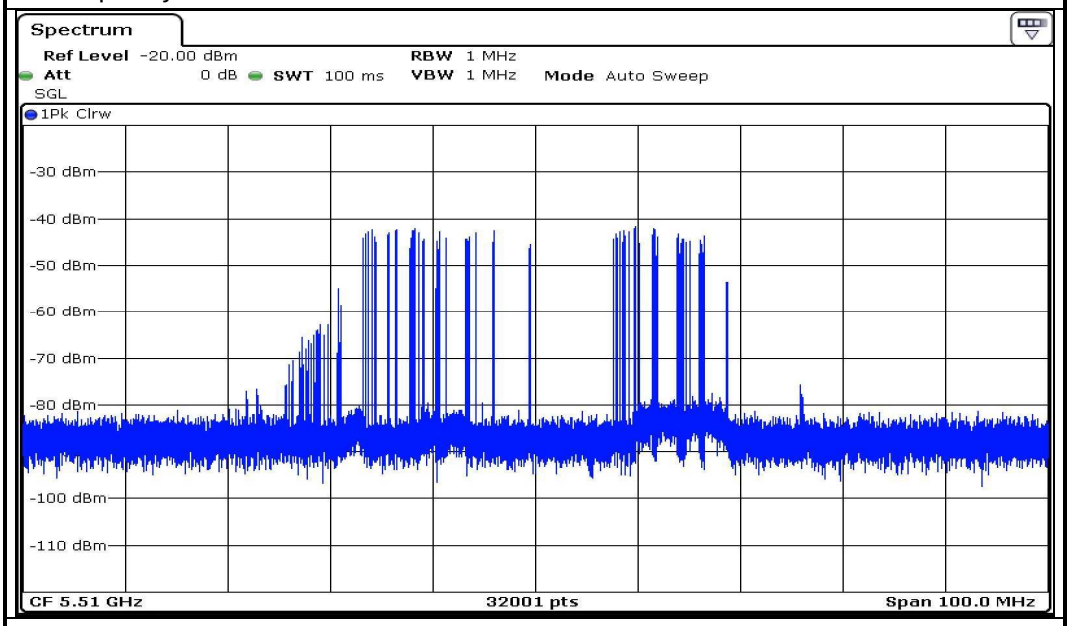

EUT (Client) links with master on 5510MHz

2) The client and DFS-certified master device are associated, and the movie can be streamed as specified in the DFS Order for a non-occupancy period test.

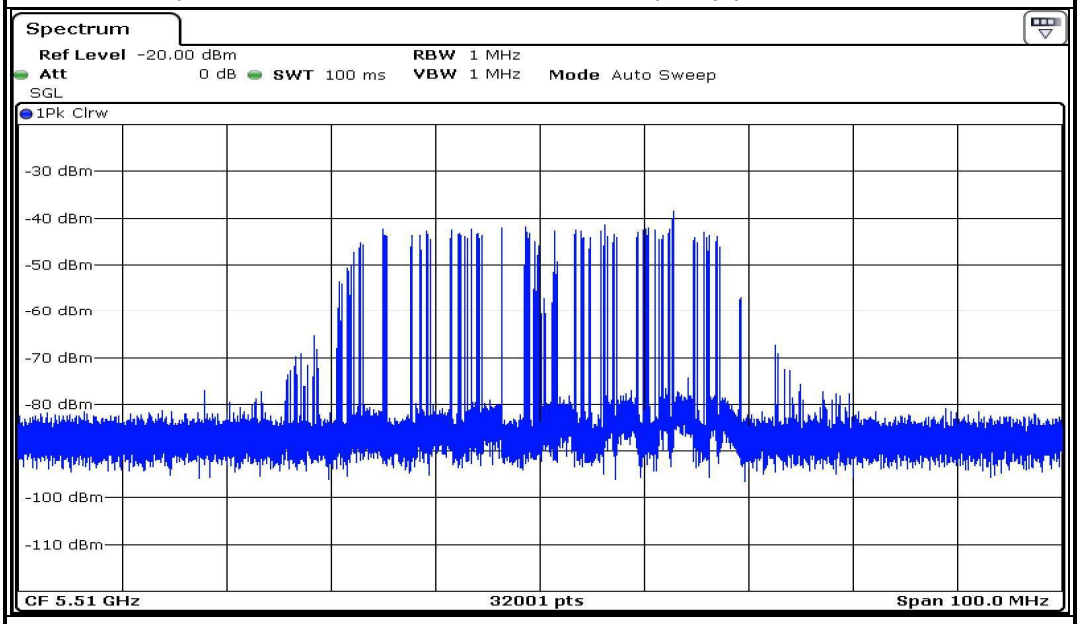

Client plays a specified files via master.

3). The device transmits one type of radar as specified in the DFS Order.

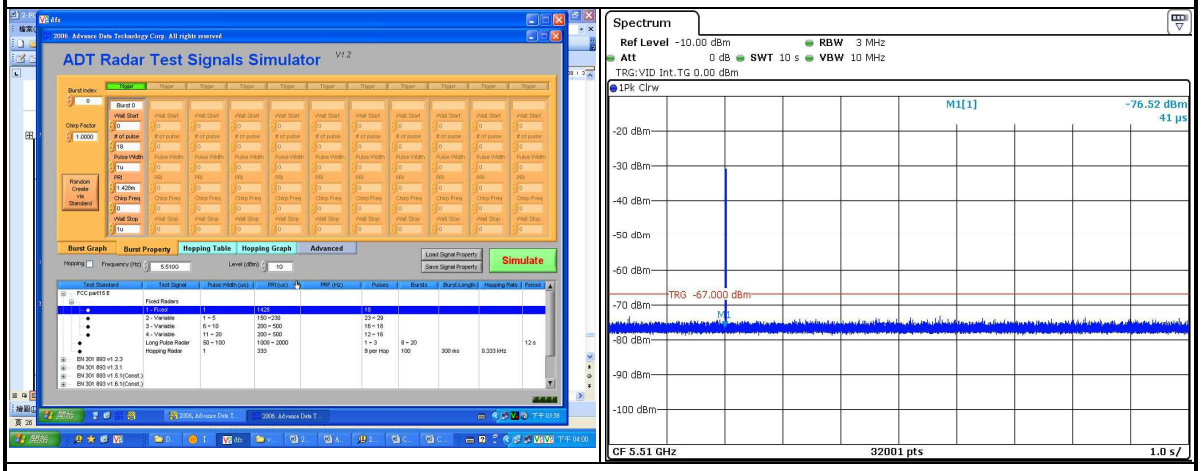

Radar 1 is used to test during DFS testing.

4) The test frequency has been monitored to ensure no transmission of any type has occurred for 30 minutes;

Note: If the client moves with the master, the device is considered compliant if nothing appears in the client non-occupancy period test. For devices that shut down (rather than moving channels), no beacons should appear;

5)An analyzer plot that contains a single 30-minute sweep on the original test frequency.

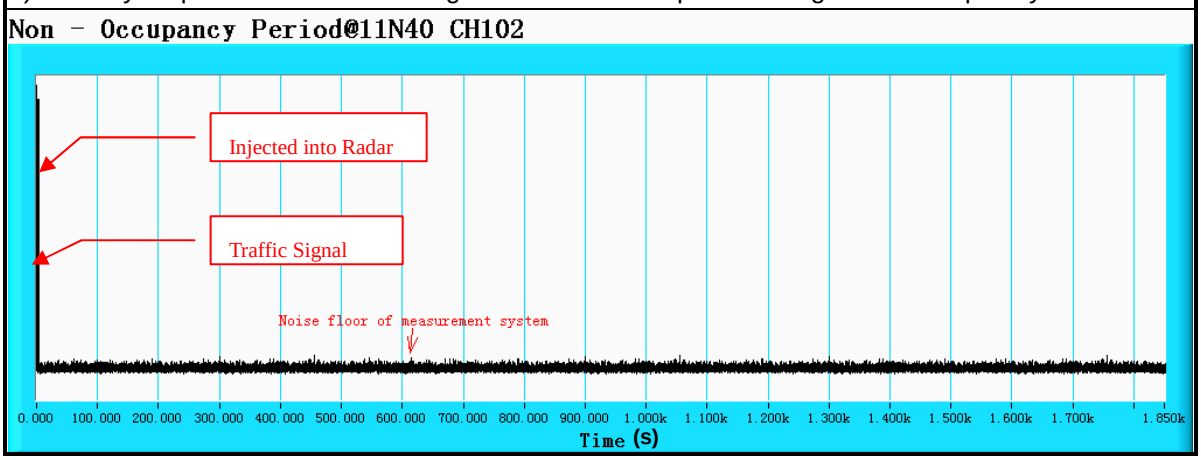

6.2.5 NON-ASSOCIATED TEST

Master was off.

During the 30 minutes observation time, The UUT did not make any transmissions in the DFS band after UUT power up.

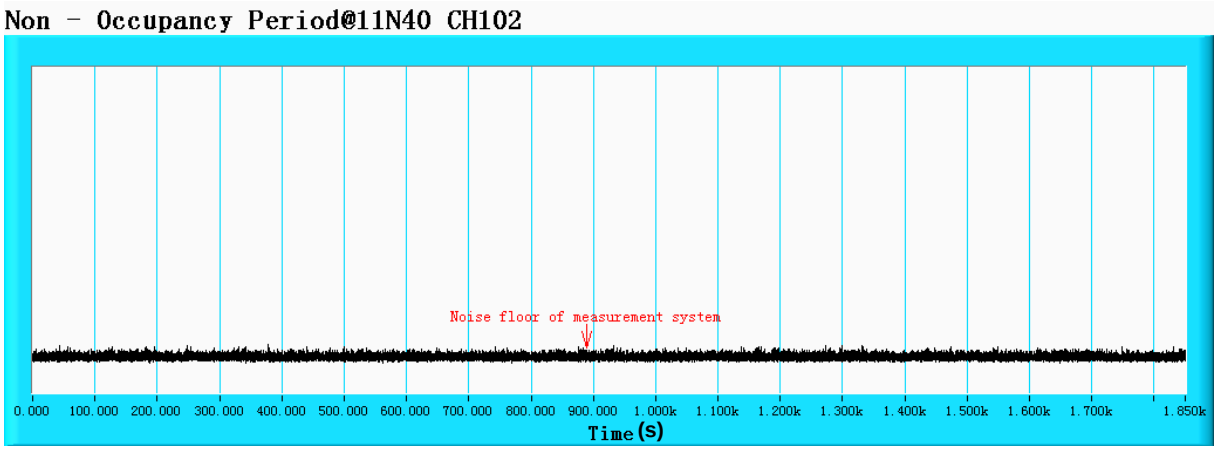

6.2.6 NON- CO-CHANNEL TEST

The UUT was investigated after radar was detected the channel and made sure no co-channel operation with radars.

7 APPENDIX A - MODIFICATIONS RECORDERS FOR ENGINEERING CHANGES TO THE EUT BY THE LAB

No any modifications are made to the EUT by the lab during the test.

---END---