FCC SAR Test Report

Report No.	:	**SA141027C05-2**
Applicant	:	**Sonim Technologies, Inc.**
Address	:	**1825 S. Grant St., Suite 200., San Mateo, CA, 94402**
Product	:	**LTE phone**
FCC ID	:	**WYPL15V013AA**
Brand	:	**Sonim**
Model No.	:	**XP5700**
Type Number	:	**L15V013AA; L15V013BA; L15V013CA**
Standards	:	**FCC 47 CFR Part 2 (2.1093) / IEEE C95.1:1992 / IEEE 1528:2003** **IEEE 1528a-2005 / KDB 865664 D01 v01r03** **KDB 248227 D01 v01r02 / KDB 447498 D01 v05r02 / KDB 648474 D04 v01r02** **KDB 941225 D01 v02 / KDB 941225 D02 v02r02 / KDB 941225 D03 v01** **KDB 941225 D05 v02r03 / KDB 941225 D06 v01r01**
Sample Received Date	:	**Oct. 27, 2014**
Date of Testing	:	**Nov. 22, 2014 ~ Dec. 08, 2014**

CERTIFICATION: The above equipment have been tested by **Bureau Veritas Consumer Products Services (H.K.) Ltd., Taoyuan Branch – Lin Kou Laboratories**, and found compliance with the requirement of the above standards. The test record, data evaluation & Equipment Under Test (EUT) configurations represented herein are true and accurate accounts of the measurements of the sample's SAR characteristics under the conditions specified in this report. It should not be reproduced except in full, without the written approval of our laboratory. The client should not use it to claim product certification, approval, or endorsement by TAF or any government agencies.

Prepared By : Vera Huang

Vera Huang / Specialist

Approved By : Gordon Lin

Gordon Lin / Assistant Manager

This report is for your exclusive use. Any copying or replication of this report to or for any other person or entity, or use of our name or trademark, is permitted only with our prior written permission. This report sets forth our findings solely with respect to the test samples identified herein. The results set forth in this report are not indicative or representative of the quality or characteristics of the lot from which a test sample was taken or any similar or identical product unless specifically and expressly noted. Our report includes all of the tests requested by you and the results thereof based upon the information that you provided to us. You have 60 days from date of issuance of this report to notify us of any material error or omission caused by our negligence, provided, however, that such notice shall be in writing and shall specifically address the issue you wish to raise. A failure to raise such issue within the prescribed time shall constitute your unqualified acceptance of the completeness of this report, the tests conducted and the correctness of the report contents. Unless specific mention, the uncertainty of measurement has been explicitly taken into account to declare the compliance or non-compliance to the specification.

Table of Contents

Release Control Record **3**
1. Summary of Maximum SAR Value **4**
2. Description of Equipment Under Test **5**
3. SAR Measurement System **6**
3.1 Definition of Specific Absorption Rate (SAR) 6
3.2 SPEAG DASY System 6
3.2.1 Robot 7
3.2.2 Probes 8
3.2.3 Data Acquisition Electronics (DAE) 8
3.2.4 Phantoms 9
3.2.5 Device Holder 10
3.2.6 System Validation Dipoles 10
3.2.7 Tissue Simulating Liquids 11
3.3 SAR System Verification 14
3.4 SAR Measurement Procedure 15
3.4.1 Area & Zoom Scan Procedure 15
3.4.2 Volume Scan Procedure 15
3.4.3 Power Drift Monitoring 16
3.4.4 Spatial Peak SAR Evaluation 16
3.4.5 SAR Averaged Methods 16
4. SAR Measurement Evaluation **17**
4.1 EUT Configuration and Setting 17
4.2 EUT Testing Position 19
4.2.1 Head Exposure Conditions 19
4.2.2 Body-Worn Accessory Exposure Conditions 21
4.2.3 Hotspot Mode Exposure conditions 22
4.2.4 SAR Test Exclusions 22
4.3 Tissue Verification 23
4.4 System Validation 24
4.5 System Verification 25
4.6 Maximum Output Power 26
4.6.1 Maximum Conducted Power 26
4.6.2 Measured Conducted Power Result 27
4.7 SAR Testing Results 35
4.7.1 SAR Results for Head 35
4.7.2 SAR Results for Body-Worn (Separation Distance is 1.0 cm Gap) 39
4.7.3 SAR Results for Hotspot (Separation Distance is 1.0 cm Gap) 41
4.7.4 SAR Measurement Variability 44
4.7.5 Simultaneous Multi-band Transmission Evaluation 45
5. Calibration of Test Equipment **57**
6. Measurement Uncertainty **58**
7. Information on the Testing Laboratories **60**

Appendix A. SAR Plots of System Verification
Appendix B. SAR Plots of SAR Measurement
Appendix C. Calibration Certificate for Probe and Dipole
Appendix D. Photographs of EUT and Setup

Release Control Record

Report No.	Reason for Change	Date Issued
SA141027C05-2	Initial release	Dec. 24, 2014

1. Summary of Maximum SAR Value

Equipment Class	Mode	Highest Reported Head SAR_{1g} (W/kg)	Highest Reported Body-Worn SAR_{1g} (1.0 cm Gap) (W/kg)	Highest Reported Hotspot SAR_{1g} (1.0 cm Gap) (W/kg)
PCE	GSM850	0.51	0.54	0.54
	GSM1900	0.34	0.31	0.31
	WCDMA II	0.78	0.60	0.60
	WCDMA V	0.55	0.61	0.61
	LTE 2	1.06	0.73	0.73
	LTE 4	1.31	1.26	1.26
	LTE 5	0.89	0.86	0.86
	LTE 7	0.15	0.47	1.29
	LTE 17	0.43	0.65	0.65
DTS	2.4G WLAN	0.34	0.04	0.04
NII	5.2G WLAN	0.18	0.03	N/A
	5.3G WLAN	0.20	0.03	N/A
	5.6G WLAN	0.12	0.04	N/A
	5.8G WLAN	0.44	0.11	N/A
DSS	Bluetooth	N/A	N/A	N/A
Highest Simultaneous Transmission SAR		Head (W/kg)	Body-Worn (W/kg)	Hotspot (W/kg)
PCE+DTS		1.31	1.30	1.30
PCE+NII		1.31	1.37	N/A
PCE+DSS		N/A	1.41	N/A

Note:

1. The SAR limit **(Head & Body: SAR_{1g} 1.6 W/kg)** for general population / uncontrolled exposure is specified in FCC 47 CFR part 2 (2.1093) and ANSI/IEEE C95.1-1992.

2. Description of Equipment Under Test

EUT Type	LTE phone
FCC ID	WYPL15V013AA
Brand Name	Sonim
Model Name	XP5700
Type Number	L15V013AA; L15V013BA; L15V013CA
Tx Frequency Bands (Unit: MHz)	GSM850 : 824.2 ~ 848.8 GSM1900 : 1850.2 ~ 1909.8 WCDMA Band II : 1852.4 ~ 1907.6 WCDMA Band V : 826.4 ~ 846.6 LTE Band 2 : 1850.7 ~ 1909.3 (1.4M), 1851.5 ~ 1908.5 (3M), 1852.5 ~ 1907.5 (5M), 1855 ~ 1905 (10M), 1857.5 ~ 1902.5 (15M), 1860 ~ 1900 (20M) LTE Band 4 : 1710.7 ~ 1754.3 (1.4M), 1711.5 ~ 1753.5 (3M), 1712.5 ~ 1752.5 (5M), 1715 ~ 1750 (10M), 1717.5 ~ 1747.5 (15M), 1720 ~ 1745 (20M) LTE Band 5 : 824.7 ~ 848.3 (1.4M), 825.5 ~ 847.5 (3M), 826.5 ~ 846.5 (5M), 829 ~ 844 (10M) LTE Band 7 : 2502.5 ~ 2567.5 (5M), 2505 ~ 2565 (10M), 2507.5 ~ 2562.5 (15M), 2510 ~ 2560 (20M) LTE Band 17 : 706.5 ~ 713.5 (5M), 709 ~ 711 (10M) WLAN : 2412 ~ 2462, 5180 ~ 5240, 5260 ~ 5320, 5500 ~ 5700, 5745 ~ 5805 Bluetooth : 2402 ~ 2480
Uplink Modulations	GSM & GPRS : GMSK EDGE : 8PSK WCDMA : QPSK LTE : QPSK, 16QAM 802.11b : DSSS 802.11a/g/n : OFDM Bluetooth : GFSK
Maximum Tune-up Conducted Power (Unit: dBm)	GSM850 : 32.0 GSM1900 : 30.0 WCDMA Band II : 23.5 WCDMA Band V : 23.0 LTE Band 2 : 24.5 LTE Band 4 : 25.0 LTE Band 5 : 24.5 LTE Band 7 : 25.0 LTE Band 17 : 24.5 WLAN 2.4G : 19.0 WLAN 5.2G : 15.5 WLAN 5.3G : 15.5 WLAN 5.6G : 15.5 WLAN 5.8G : 15.5 Bluetooth : 8.5
Antenna Type	Fixed Internal Antenna
EUT Stage	Identical Prototype

Note:

1. The above EUT information is declared by manufacturer and for more detailed features description please refers to the manufacturer's specifications or User's Manual.

List of Accessory:

Battery	**Brand Name**	Sonim
	Model Name	BAT-03180-01S
	Power Rating	3.7Vdc, 3180mAh
	Type	Li-ion

3. SAR Measurement System

3.1 Definition of Specific Absorption Rate (SAR)

SAR is related to the rate at which energy is absorbed per unit mass in an object exposed to a radio field. The SAR distribution in a biological body is complicated and is usually carried out by experimental techniques or numerical modeling. The standard recommends limits for two tiers of groups, occupational/controlled and general population/uncontrolled, based on a person's awareness and ability to exercise control over his or her exposure. In general, occupational/controlled exposure limits are higher than the limits for general population/uncontrolled.

The SAR definition is the time derivative (rate) of the incremental energy (dW) absorbed by (dissipated in) an incremental mass (dm) contained in a volume element (dv) of a given density (ρ). The equation description is as below:

$$\mathbf{SAR} = \frac{\mathbf{d}}{\mathbf{dt}}\left(\frac{\mathbf{dW}}{\mathbf{dm}}\right) = \frac{\mathbf{d}}{\mathbf{dt}}\left(\frac{\mathbf{dW}}{\boldsymbol{\rho}\mathbf{dv}}\right)$$

SAR is expressed in units of Watts per kilogram (W/kg)

SAR measurement can be related to the electrical field in the tissue by

$$\mathbf{SAR} = \frac{\boldsymbol{\sigma}|\mathbf{E}|^2}{\boldsymbol{\rho}}$$

Where: σ is the conductivity of the tissue, ρ is the mass density of the tissue and E is the RMS electrical field strength.

3.2 SPEAG DASY System

DASY system consists of high precision robot, probe alignment sensor, phantom, robot controller, controlled measurement server and near-field probe. The robot includes six axes that can move to the precision position of the DASY4/5 software defined. The DASY software can define the area that is detected by the probe. The robot is connected to controlled box. Controlled measurement server is connected to the controlled robot box. The DAE includes amplifier, signal multiplexing, AD converter, offset measurement and surface detection. It is connected to the Electro-optical coupler (ECO). The ECO performs the conversion form the optical into digital electric signal of the DAE and transfers data to the PC.

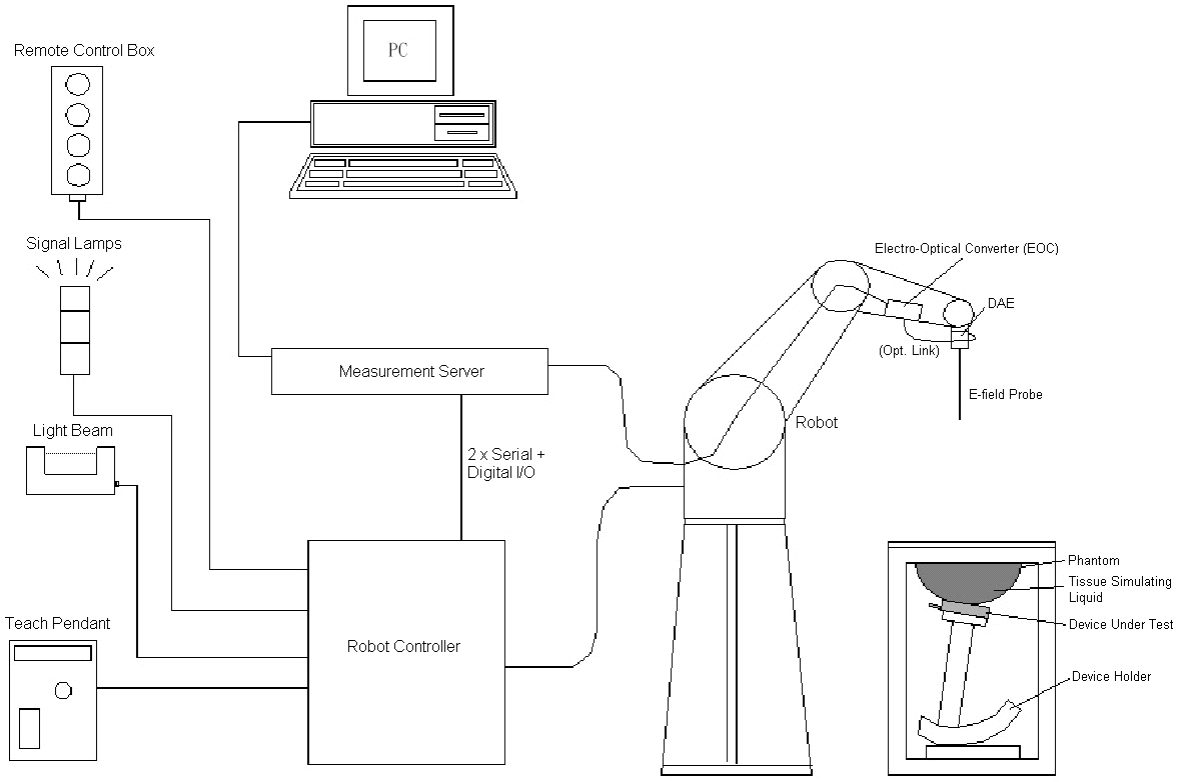

Fig-3.1 DASY System Setup

3.2.1 Robot

The DASY system uses the high precision robots from Stäubli SA (France). For the 6-axis controller system, the robot controller version (DASY4: CS7MB; DASY5: CS8c) from Stäubli is used. The Stäubli robot series have many features that are important for our application:

- High precision (repeatability ±0.035 mm)
- High reliability (industrial design)
- Jerk-free straight movements
- Low ELF interference (the closed metallic construction shields against motor control fields)

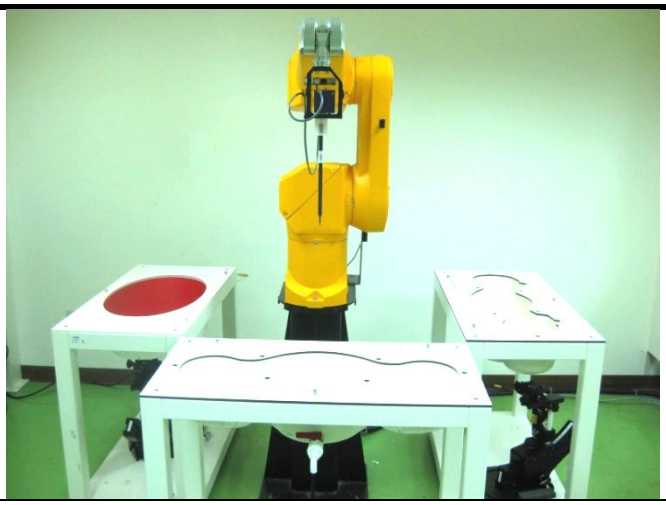

Fig-3.2 DASY4

Fig-3.3 DASY5

3.2.2 Probes

The SAR measurement is conducted with the dosimetric probe. The probe is specially designed and calibrated for use in liquid with high permittivity. The dosimetric probe has special calibration in liquid at different frequency.

Model	EX3DV4	
Construction	Symmetrical design with triangular core. Built-in shielding against static charges. PEEK enclosure material (resistant to organic solvents, e.g., DGBE).	
Frequency	10 MHz to 6 GHz Linearity: ± 0.2 dB	
Directivity	± 0.3 dB in HSL (rotation around probe axis) ± 0.5 dB in tissue material (rotation normal to probe axis)	
Dynamic Range	10 µW/g to 100 mW/g Linearity: ± 0.2 dB (noise: typically < 1 µW/g)	
Dimensions	Overall length: 337 mm (Tip: 20 mm) Tip diameter: 2.5 mm (Body: 12 mm) Typical distance from probe tip to dipole centers: 1 mm	

Model	ES3DV3	
Construction	Symmetrical design with triangular core. Interleaved sensors. Built-in shielding against static charges. PEEK enclosure material (resistant to organic solvents, e.g., DGBE).	
Frequency	10 MHz to 4 GHz Linearity: ± 0.2 dB	
Directivity	± 0.2 dB in HSL (rotation around probe axis) ± 0.3 dB in tissue material (rotation normal to probe axis)	
Dynamic Range	5 µW/g to 100 mW/g Linearity: ± 0.2 dB	
Dimensions	Overall length: 337 mm (Tip: 20 mm) Tip diameter: 3.9 mm (Body: 12 mm) Distance from probe tip to dipole centers: 2.0 mm	

3.2.3 Data Acquisition Electronics (DAE)

Model	DAE3, DAE4	
Construction	Signal amplifier, multiplexer, A/D converter and control logic. Serial optical link for communication with DASY embedded system (fully remote controlled). Two step probe touch detector for mechanical surface detection and emergency robot stop.	
Measurement Range	-100 to +300 mV (16 bit resolution and two range settings: 4mV, 400mV)	
Input Offset Voltage	< 5µV (with auto zero)	
Input Bias Current	< 50 fA	
Dimensions	60 x 60 x 68 mm	

3.2.4 Phantoms

Model	Twin SAM	
Construction	The shell corresponds to the specifications of the Specific Anthropomorphic Mannequin (SAM) phantom defined in IEEE 1528 and IEC 62209-1. It enables the dosimetric evaluation of left and right hand phone usage as well as body mounted usage at the flat phantom region. A cover prevents evaporation of the liquid. Reference markings on the phantom allow the complete setup of all predefined phantom positions and measurement grids by teaching three points with the robot.	
Material	Vinylester, glass fiber reinforced (VE-GF)	
Shell Thickness	2 ± 0.2 mm (6 ± 0.2 mm at ear point)	
Dimensions	Length: 1000 mm Width: 500 mm Height: adjustable feet	
Filling Volume	approx. 25 liters	

Model	ELI	
Construction	Phantom for compliance testing of handheld and body-mounted wireless devices in the frequency range of 30 MHz to 6 GHz. ELI is fully compatible with the IEC 62209-2 standard and all known tissue simulating liquids. ELI has been optimized regarding its performance and can be integrated into our standard phantom tables. A cover prevents evaporation of the liquid. Reference markings on the phantom allow installation of the complete setup, including all predefined phantom positions and measurement grids, by teaching three points. The phantom is compatible with all SPEAG dosimetric probes and dipoles.	
Material	Vinylester, glass fiber reinforced (VE-GF)	
Shell Thickness	2.0 ± 0.2 mm (bottom plate)	
Dimensions	Major axis: 600 mm Minor axis: 400 mm	
Filling Volume	approx. 30 liters	

3.2.5 Device Holder

Model	Mounting Device	
Construction	In combination with the Twin SAM Phantom or ELI4, the Mounting Device enables the rotation of the mounted transmitter device in spherical coordinates. Rotation point is the ear opening point. Transmitter devices can be easily and accurately positioned according to IEC, IEEE, FCC or other specifications. The device holder can be locked for positioning at different phantom sections (left head, right head, flat).	
Material	POM	

Model	Laptop Extensions Kit	
Construction	Simple but effective and easy-to-use extension for Mounting Device that facilitates the testing of larger devices according to IEC 62209-2 (e.g., laptops, cameras, etc.). It is lightweight and fits easily on the upper part of the Mounting Device in place of the phone positioner.	
Material	POM, Acrylic glass, Foam	

3.2.6 System Validation Dipoles

Model	D-Serial	
Construction	Symmetrical dipole with l/4 balun. Enables measurement of feed point impedance with NWA. Matched for use near flat phantoms filled with tissue simulating solutions.	
Frequency	750 MHz to 5800 MHz	
Return Loss	> 20 dB	
Power Capability	> 100 W (f < 1GHz), > 40 W (f > 1GHz)	

3.2.7 Tissue Simulating Liquids

For SAR measurement of the field distribution inside the phantom, the phantom must be filled with homogeneous tissue simulating liquid to a depth of at least 15 cm. For head SAR testing, the liquid height from the ear reference point (ERP) of the phantom to the liquid top surface is larger than 15 cm. For body SAR testing, the liquid height from the center of the flat phantom to the liquid top surface is larger than 15 cm. The nominal dielectric values of the tissue simulating liquids in the phantom and the tolerance of 5% are listed in Table-3.1.

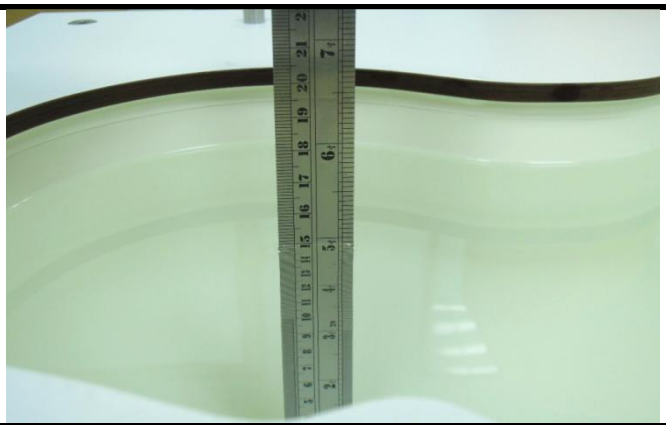	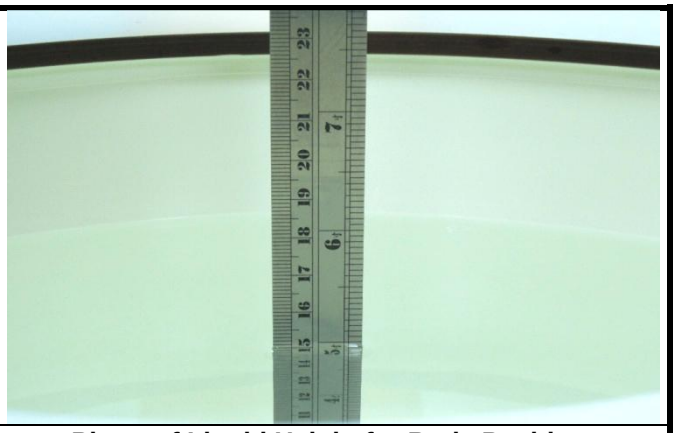
Photo of Liquid Height for Head Position	**Photo of Liquid Height for Body Position**

The dielectric properties of the head tissue simulating liquids are defined in IEEE 1528, and KDB 865664 D01 Appendix A. For the body tissue simulating liquids, the dielectric properties are defined in KDB 865664 D01 Appendix A. The dielectric properties of the tissue simulating liquids were verified prior to the SAR evaluation using a dielectric assessment kit and a network analyzer.

Table-3.1 Targets of Tissue Simulating Liquid

Frequency (MHz)	Target Permittivity	Range of ±5%	Target Conductivity	Range of ±5%
For Head				
750	41.9	39.8 ~ 44.0	0.89	0.85 ~ 0.93
835	41.5	39.4 ~ 43.6	0.90	0.86 ~ 0.95
900	41.5	39.4 ~ 43.6	0.97	0.92 ~ 1.02
1450	40.5	38.5 ~ 42.5	1.20	1.14 ~ 1.26
1640	40.3	38.3 ~ 42.3	1.29	1.23 ~ 1.35
1750	40.1	38.1 ~ 42.1	1.37	1.30 ~ 1.44
1800	40.0	38.0 ~ 42.0	1.40	1.33 ~ 1.47
1900	40.0	38.0 ~ 42.0	1.40	1.33 ~ 1.47
2000	40.0	38.0 ~ 42.0	1.40	1.33 ~ 1.47
2300	39.5	37.5 ~ 41.5	1.67	1.59 ~ 1.75
2450	39.2	37.2 ~ 41.2	1.80	1.71 ~ 1.89
2600	39.0	37.1 ~ 41.0	1.96	1.86 ~ 2.06
3500	37.9	36.0 ~ 39.8	2.91	2.76 ~ 3.06
5200	36.0	34.2 ~ 37.8	4.66	4.43 ~ 4.89
5300	35.9	34.1 ~ 37.7	4.76	4.52 ~ 5.00
5500	35.6	33.8 ~ 37.4	4.96	4.71 ~ 5.21
5600	35.5	33.7 ~ 37.3	5.07	4.82 ~ 5.32
5800	35.3	33.5 ~ 37.1	5.27	5.01 ~ 5.53
For Body				
750	55.5	52.7 ~ 58.3	0.96	0.91 ~ 1.01
835	55.2	52.4 ~ 58.0	0.97	0.92 ~ 1.02
900	55.0	52.3 ~ 57.8	1.05	1.00 ~ 1.10
1450	54.0	51.3 ~ 56.7	1.30	1.24 ~ 1.37
1640	53.8	51.1 ~ 56.5	1.40	1.33 ~ 1.47
1750	53.4	50.7 ~ 56.1	1.49	1.42 ~ 1.56
1800	53.3	50.6 ~ 56.0	1.52	1.44 ~ 1.60
1900	53.3	50.6 ~ 56.0	1.52	1.44 ~ 1.60
2000	53.3	50.6 ~ 56.0	1.52	1.44 ~ 1.60
2300	52.9	50.3 ~ 55.5	1.81	1.72 ~ 1.90
2450	52.7	50.1 ~ 55.3	1.95	1.85 ~ 2.05
2600	52.5	49.9 ~ 55.1	2.16	2.05 ~ 2.27
3500	51.3	48.7 ~ 53.9	3.31	3.14 ~ 3.48
5200	49.0	46.6 ~ 51.5	5.30	5.04 ~ 5.57
5300	48.9	46.5 ~ 51.3	5.42	5.15 ~ 5.69
5500	48.6	46.2 ~ 51.0	5.65	5.37 ~ 5.93
5600	48.5	46.1 ~ 50.9	5.77	5.48 ~ 6.06
5800	48.2	45.8 ~ 50.6	6.00	5.70 ~ 6.30

The following table gives the recipes for tissue simulating liquids.

Table-3.2 Recipes of Tissue Simulating Liquid

Tissue Type	Bactericide	DGBE	HEC	NaCl	Sucrose	Triton X-100	Water	Diethylene Glycol Mono-hexylether
H750	0.2	-	0.2	1.5	56.0	-	42.1	-
H835	0.2	-	0.2	1.5	57.0	-	41.1	-
H900	0.2	-	0.2	1.4	58.0	-	40.2	-
H1450	-	43.3	-	0.6	-	-	56.1	-
H1640	-	45.8	-	0.5	-	-	53.7	-
H1750	-	47.0	-	0.4	-	-	52.6	-
H1800	-	44.5	-	0.3	-	-	55.2	-
H1900	-	44.5	-	0.2	-	-	55.3	-
H2000	-	44.5	-	0.1	-	-	55.4	-
H2300	-	44.9	-	0.1	-	-	55.0	-
H2450	-	45.0	-	0.1	-	-	54.9	-
H2600	-	45.1	-	0.1	-	-	54.8	-
H3500	-	8.0	-	0.2	-	20.0	71.8	-
H5G	-	-	-	-	-	17.2	65.5	17.3
B750	0.2	-	0.2	0.8	48.8	-	50.0	-
B835	0.2	-	0.2	0.9	48.5	-	50.2	-
B900	0.2	-	0.2	0.9	48.2	-	50.5	-
B1450	-	34.0	-	0.3	-	-	65.7	-
B1640	-	32.5	-	0.3	-	-	67.2	-
B1750	-	31.0	-	0.2	-	-	68.8	-
B1800	-	29.5	-	0.4	-	-	70.1	-
B1900	-	29.5	-	0.3	-	-	70.2	-
B2000	-	30.0	-	0.2	-	-	69.8	-
B2300	-	31.0	-	0.1	-	-	68.9	-
B2450	-	31.4	-	0.1	-	-	68.5	-
B2600	-	31.8	-	0.1	-	-	68.1	-
B3500	-	28.8	-	0.1	-	-	71.1	-
B5G	-	-	-	-	-	10.7	78.6	10.7

3.3 SAR System Verification

The system check verifies that the system operates within its specifications. It is performed daily or before every SAR measurement. The system check uses normal SAR measurements in the flat section of the phantom with a matched dipole at a specified distance. The system verification setup is shown as below.

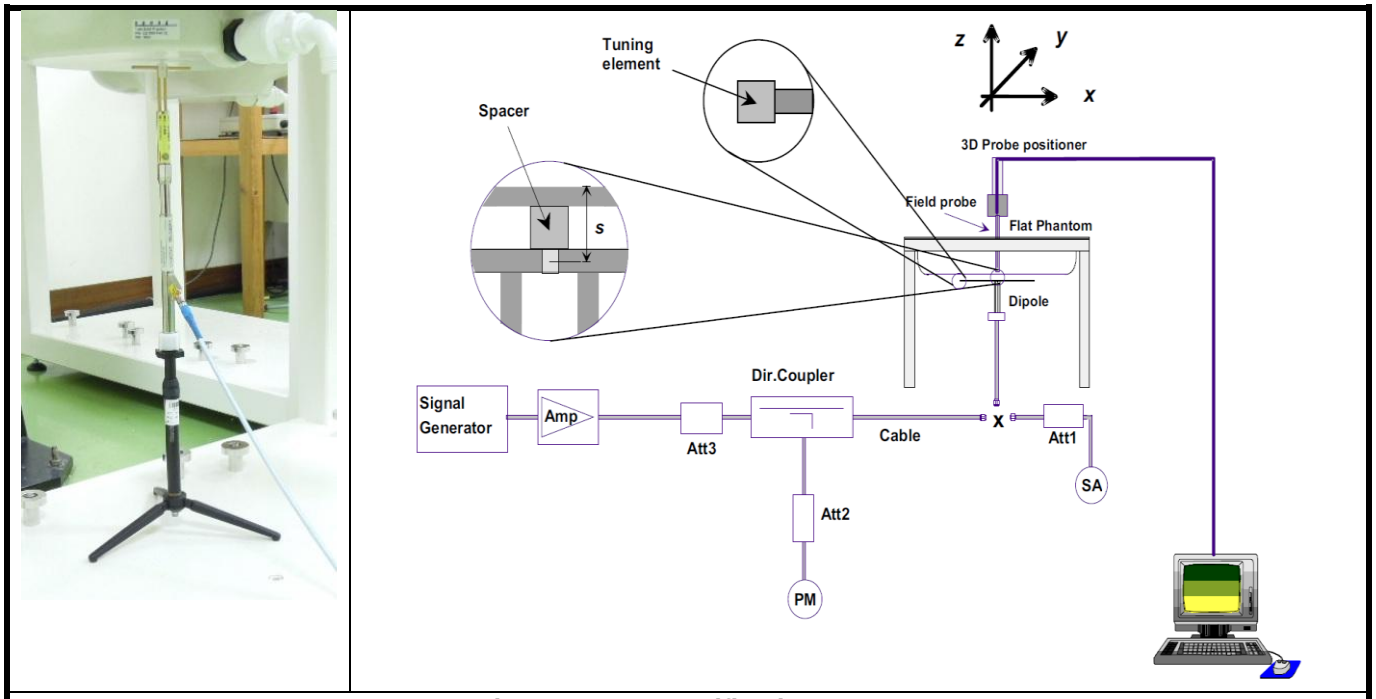

Fig-3.4 System Verification Setup

The validation dipole is placed beneath the flat phantom with the specific spacer in place. The distance spacer is touch the phantom surface with a light pressure at the reference marking and be oriented parallel to the long side of the phantom. The spectrum analyzer measures the forward power at the location of the system check dipole connector. The signal generator is adjusted for the desired forward power (250 mW is used for 700 MHz to 3 GHz, 100 mW is used for 3.5 GHz to 6 GHz) at the dipole connector and the power meter is read at that level. After connecting the cable to the dipole, the signal generator is readjusted for the same reading at power meter.

After system check testing, the SAR result will be normalized to 1W forward input power and compared with the reference SAR value derived from validation dipole certificate report. The deviation of system check should be within 10 %.

3.4 SAR Measurement Procedure

According to the SAR test standard, the recommended procedure for assessing the peak spatial-average SAR value consists of the following steps:

(a) Power reference measurement
(b) Area scan
(c) Zoom scan
(d) Power drift measurement

The SAR measurement procedures for each of test conditions are as follows:

(a) Make EUT to transmit maximum output power
(b) Measure conducted output power through RF cable
(c) Place the EUT in the specific position of phantom
(d) Perform SAR testing steps on the DASY system
(e) Record the SAR value

3.4.1 Area & Zoom Scan Procedure

First Area Scan is used to locate the approximate location(s) of the local peak SAR value(s). The measurement grid within an Area Scan is defined by the grid extent, grid step size and grid offset. Next, in order to determine the EM field distribution in a three-dimensional spatial extension, Zoom Scan is required. The Zoom Scan is performed around the highest E-field value to determine the averaged SAR-distribution over 10 g. According to KDB 865664 D01, the resolution for Area and Zoom scan is specified in the table below.

Items	<= 2 GHz	2-3 GHz	3-4 GHz	4-5 GHz	5-6 GHz
Area Scan (Δx, Δy)	<= 15 mm	<= 12 mm	<= 12 mm	<= 10 mm	<= 10 mm
Zoom Scan (Δx, Δy)	<= 8 mm	<= 5 mm	<= 5 mm	<= 4 mm	<= 4 mm
Zoom Scan (Δz)	<= 5 mm	<= 5 mm	<= 4 mm	<= 3 mm	<= 2 mm
Zoom Scan Volume	>= 30 mm	>= 30 mm	>= 28 mm	>= 25 mm	>= 22 mm

Note:

When zoom scan is required and report SAR is <= 1.4 W/kg, the zoom scan resolution of Δx / Δy (2-3GHz: <= 8 mm, 3-4GHz: <= 7 mm, 4-6GHz: <= 5 mm) may be applied.

3.4.2 Volume Scan Procedure

The volume scan is used for assess overlapping SAR distributions for antennas transmitting in different frequency bands. It is equivalent to an oversized zoom scan used in standalone measurements. The measurement volume will be used to enclose all the simultaneous transmitting antennas. For antennas transmitting simultaneously in different frequency bands, the volume scan is measured separately in each frequency band. In order to sum correctly to compute the 1g aggregate SAR, the EUT remain in the same test position for all measurements and all volume scan use the same spatial resolution and grid spacing. When all volume scan were completed, the software, SEMCAD postprocessor can combine and subsequently superpose these measurement data to calculating the multiband SAR.

3.4.3 Power Drift Monitoring

All SAR testing is under the EUT install full charged battery and transmit maximum output power. In DASY measurement software, the power reference measurement and power drift measurement procedures are used for monitoring the power drift of EUT during SAR test. Both these procedures measure the field at a specified reference position before and after the SAR testing. The software will calculate the field difference in dB. If the power drift more than 5%, the SAR will be retested.

3.4.4 Spatial Peak SAR Evaluation

The procedure for spatial peak SAR evaluation has been implemented according to the test standard. It can be conducted for 1g and 10g, as well as for user-specific masses. The DASY software includes all numerical procedures necessary to evaluate the spatial peak SAR value.

The base for the evaluation is a "cube" measurement. The measured volume must include the 1g and 10g cubes with the highest averaged SAR values. For that purpose, the center of the measured volume is aligned to the interpolated peak SAR value of a previously performed area scan.

The entire evaluation of the spatial peak values is performed within the post-processing engine (SEMCAD). The system always gives the maximum values for the 1g and 10g cubes. The algorithm to find the cube with highest averaged SAR is divided into the following stages:

(a) Extraction of the measured data (grid and values) from the Zoom Scan
(b) Calculation of the SAR value at every measurement point based on all stored data (A/D values and measurement parameters)
(c) Generation of a high-resolution mesh within the measured volume
(d) Interpolation of all measured values form the measurement grid to the high-resolution grid
(e) Extrapolation of the entire 3-D field distribution to the phantom surface over the distance from sensor to surface
(f) Calculation of the averaged SAR within masses of 1g and 10g

3.4.5 SAR Averaged Methods

In DASY, the interpolation and extrapolation are both based on the modified Quadratic Shepard’s method. The interpolation scheme combines a least-square fitted function method and a weighted average method which are the two basic types of computational interpolation and approximation.

Extrapolation routines are used to obtain SAR values between the lowest measurement points and the inner phantom surface. The extrapolation distance is determined by the surface detection distance and the probe sensor offset. The uncertainty increases with the extrapolation distance. To keep the uncertainty within 1% for the 1 g and 10 g cubes, the extrapolation distance should not be larger than 5 mm.

4. SAR Measurement Evaluation

4.1 EUT Configuration and Setting

The EUT is a voice/data transmitter device that contains one WWAN transmitter (GSM / WCDMA / LTE). Confirming the LTE transmitter follows 3GPP standards, is category 3, FDD-LTE band 2/4 (BW 1.4/3/5/10/15/20 MHz), FDD-LTE band 5 (BW 1.4/3/5/10 MHz), FDD-LTE band 7 (BW 5/10/15/20 MHz), FDD-LTE band 17 (BW 5/10 MHz), supports QPSK / 16QAM modulations, and supports data transmission only. Tested per 3GPP 36.521 maximum transmit procedures for both QPSK / 16QAM.

LTE Maximum Power Reduction in accordance with 3GPP 36.101: Power Reduction in accordance to 3GPP is active all times during LTE operation.

Modulation	Channel Bandwidth / RB Configurations						LTE MPR Setting (dB)
	BW 1.4 MHz	BW 3 MHz	BW 5 MHz	BW 10 MHz	BW 15 MHz	BW 20 MHz	
QPSK	> 5	> 4	> 8	> 12	> 16	> 18	1
16QAM	<= 5	<= 4	<= 8	<= 12	<= 16	<= 18	1
16QAM	> 5	> 4	> 8	> 12	> 16	> 18	2

Note: MPR is according to the standard and implemented in the circuit (mandatory).

In addition, the device is compliant with A-MPR requirements defined in 36.101 section 6.2.4 that may be required to meet 3GPP Adjacent Channel Leakage Ratio ("ACLR") requirements. A-MPR was disabled for all FCC compliance testing.

The simultaneous transmission possibilities are listed as below.

Simultaneous TX Combination	Configuration	Head (Voice / VoIP)	Body Worn (Voice / VoIP)	Hotspot (Data)
1	GSM850 (Voice / Data) + WLAN (Data)	Yes	Yes	Yes
2	GSM1900 (Voice / Data) + WLAN (Data)	Yes	Yes	Yes
3	WCDMA II (Voice / Data) + WLAN (Data)	Yes	Yes	Yes
4	WCDMA V (Voice / Data) + WLAN (Data)	Yes	Yes	Yes
5	LTE Band 2 (Data) + WLAN (Data)	Yes	Yes	Yes
6	LTE Band 4 (Data) + WLAN (Data)	Yes	Yes	Yes
7	LTE Band 5 (Data) + WLAN (Data)	Yes	Yes	Yes
8	LTE Band 7 (Data) + WLAN (Data)	Yes	Yes	Yes
9	LTE Band 17 (Data) + WLAN (Data)	Yes	Yes	Yes
10	GSM850 (Voice / Data) + BT (Data)	No	Yes	No
11	GSM1900 (Voice / Data) + BT (Data)	No	Yes	No
12	WCDMA II (Voice / Data) + BT (Data)	No	Yes	No
13	WCDMA V (Voice / Data) + BT (Data)	No	Yes	No
14	LTE Band 2 (Data) + BT (Data)	No	Yes	No
15	LTE Band 4 (Data) + BT (Data)	No	Yes	No
16	LTE Band 5 (Data) + BT (Data)	No	Yes	No
17	LTE Band 7 (Data) + BT (Data)	No	Yes	No
18	LTE Band 17 (Data) + BT (Data)	No	Yes	No

Note:

1. The WLAN and BT cannot transmit simultaneously, so there is no co-location test requirement for WLAN and BT.
2. Only WLAN 2.4G (802.11b/g/n) supports wireless hotspot capability. WLAN 5G (802.11a/n) does not support wireless hotspot mode.

For WWAN SAR testing, the EUT was linked and controlled by base station emulator (Agilent E5515C is used for GSM/WCDMA, and Anritsu MT8820C is used for LTE). Communication between the EUT and the emulator was established by air link. The distance between the EUT and the communicating antenna of the emulator is larger than 50 cm and the output power radiated from the emulator antenna is at least 30 dB smaller than the output power of EUT. The EUT was set from the emulator to radiate maximum output power during SAR testing.

For GSM850, the power control level is set to 5. For GPRS850 (GMSK, CS1), the power control level is set to 5. For EDGE850 (8PSK:MCS9), the power control level is set to 8. For GSM1900, the power control level is set to 0. For GPRS1900 (GMSK, CS1), the power control level is set to 0. For EDGE1900 (8PSK:MCS9), the power control level is set to 2.

For WCDMA, head and body SAR is tested under 12.2k RMC mode with power control set all up bits. SAR for AMR is not required since its power is less than 1/4 dB higher than RMC. SAR for HSDPA/HSUPA is not required since its power is less than 1/4 dB higher than RMC without HSDPA/HSUPA and SAR for 12.2 kbps RMC is less than 75% of the SAR limit (1.2 W/kg).

For LTE, set the related parameters of operating band, channel bandwidth, uplink channel number, modulation type, and RB in base station simulator. When the EUT has registered and communicated to base station simulator, set the simulator to make EUT transmitting the maximum radiated power. The steps for system simulator (Anritsu MT8820C) setup are as below.

1. Press the “Std” button to select “LTE 22.20S” function
2. Choose the “Screen Select” item to “Fundamental Measurement”
3. Enter the “Common” item
4. Set the Operating Band
5. Set the Channel Bandwidth
6. Set the UL Channel & Frequency
7. Set the Modulation
8. Set the RB number and RB shift
9. Press “Start Call” button when EUT register to the system simulator
10. Set the TX-1 Max. Power to make the EUT transmit maximum output power

For WLAN SAR testing, the EUT has installed WLAN engineering testing software which can provide continuous transmitting RF signal. According to KDB 248227 D01, WLAN SAR should tested at the lowest data rate, and testing at higher data rate is not required when the maximum average output power is less than 1/4 dB higher than those measured at the lowest data rate. Since the WLAN power at lowest data rate has highest output power, WLAN SAR for this device was performed at the lowest data rate.

4.2 EUT Testing Position

According to KDB 648474 D04, handsets are tested for SAR compliance in head, body-worn accessory and other use configurations described in the following subsections.

4.2.1 Head Exposure Conditions

Head exposure is limited to next to the ear voice mode operations. Head SAR compliance is tested according to the test positions defined in IEEE Std 1528-2003 using the SAM phantom illustrated as below.

1. Define two imaginary lines on the handset

(a) The vertical centerline passes through two points on the front side of the handset - the midpoint of the width w_t of the handset at the level of the acoustic output, and the midpoint of the width w_b of the bottom of the handset.

(b) The horizontal line is perpendicular to the vertical centerline and passes through the center of the acoustic output. The horizontal line is also tangential to the face of the handset at point A.

(c) The two lines intersect at point A. Note that for many handsets, point A coincides with the center of the acoustic output; however, the acoustic output may be located elsewhere on the horizontal line. Also note that the vertical centerline is not necessarily parallel to the front face of the handset, especially for clamshell handsets, handsets with flip covers, and other irregularly shaped handsets.

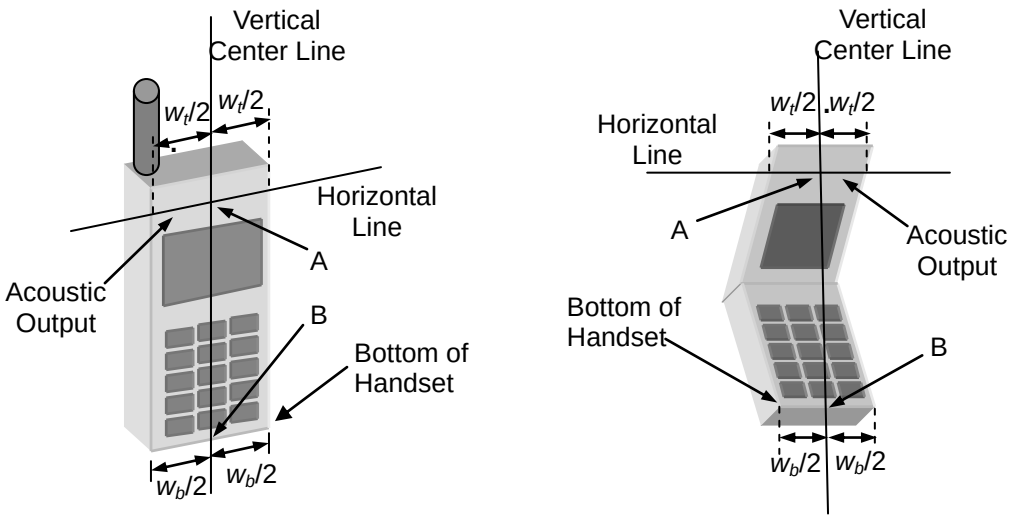

Fig-4.1 Illustration for Handset Vertical and Horizontal Reference Lines

2. Cheek Position

(a) To position the device with the vertical center line of the body of the device and the horizontal line crossing the center piece in a plane parallel to the sagittal plane of the phantom. While maintaining the device in this plane, align the vertical center line with the reference plane containing the three ear and mouth reference point (M: Mouth, RE: Right Ear, and LE: Left Ear) and align the center of the ear piece with the line RE-LE.

(b) To move the device towards the phantom with the ear piece aligned with the line LE-RE until the phone touched the ear. While maintaining the device in the reference plane and maintaining the phone contact with the ear, move the bottom of the phone until any point on the front side is in contact with the cheek of the phantom or until contact with the ear is lost (see Fig-4.2).

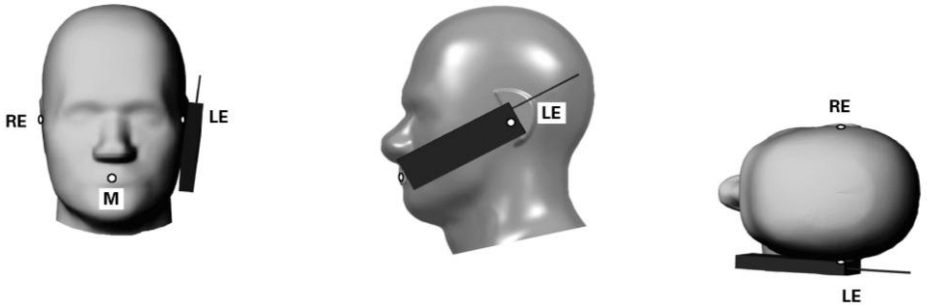

Fig-4.2 Illustration for Cheek Position

3. Tilted Position

(a) To position the device in the “cheek” position described above.

(b) While maintaining the device the reference plane described above and pivoting against the ear, moves it outward away from the mouth by an angle of 15 degrees or until contact with the ear is lost (see Fig-4.3).

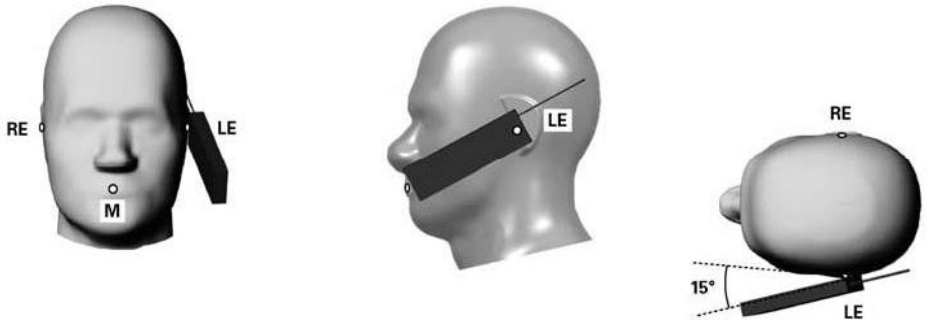

Fig-4.3 Illustration for Tilted Position

4.2.2 Body-Worn Accessory Exposure Conditions

Body-worn accessory exposure is typically related to voice mode operations when handsets are carried in body-worn accessories. The body-worn accessory procedures in KDB 447498 D01 are used to test for body-worn accessory SAR compliance, without a headset connected to it. This enables the test results for such configuration to be compatible with that required for hotspot mode when the body-worn accessory test separation distance is greater than or equal to that required for hotspot mode. When the reported SAR for a body-worn accessory, measured without a headset connected to the handset, is > 1.2 W/kg, the highest reported SAR configuration for that wireless mode and frequency band should be repeated for that body-worn accessory with a headset attached to the handset.

Body-worn accessories that do not contain metallic or conductive components may be tested according to worst-case exposure configurations, typically according to the smallest test separation distance required for the group of body-worn accessories with similar operating and exposure characteristics. All body-worn accessories containing metallic components are tested in conjunction with the host device.

Body-worn accessory SAR compliance is based on a single minimum test separation distance for all wireless and operating modes applicable to each body-worn accessory used by the host, and according to the relevant voice and/or data mode transmissions and operations. If a body-worn accessory supports voice only operations in its normal and expected use conditions, testing of data mode for body-worn compliance is not required.

A conservative minimum test separation distance for supporting off-the-shelf body-worn accessories that may be acquired by users of consumer handsets is used to test for body-worn accessory SAR compliance. This distance is determined by the handset manufacturer, according to the requirements of Supplement C 01-01. Devices that are designed to operate on the body of users using lanyards and straps, or without requiring additional body-worn accessories, will be tested using a conservative minimum test separation distance <= 5 mm to support compliance.

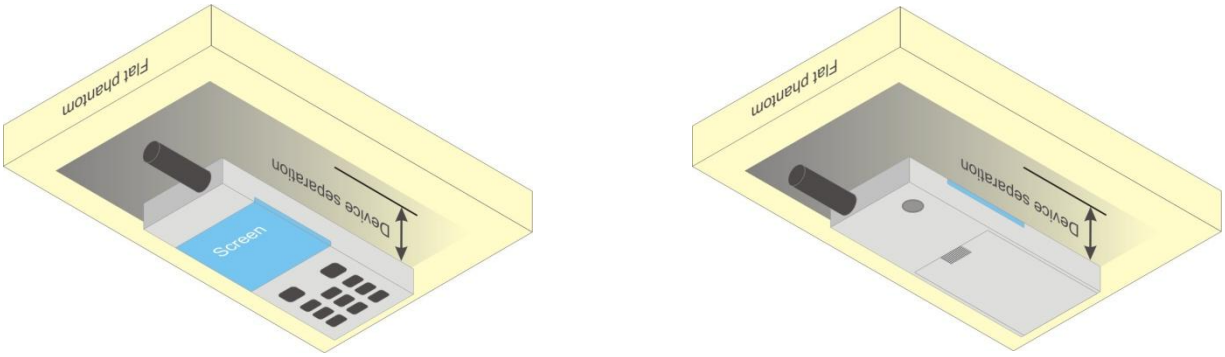

Fig-4.4 Illustration for Body Worn Position

4.2.3 Hotspot Mode Exposure conditions

For handsets that support hotspot mode operations, with wireless router capabilities and various web browsing functions, the relevant hand and body exposure conditions are tested according to the hotspot SAR procedures in KDB 941225 D06. A test separation distance of 10 mm is required between the phantom and all surfaces and edges with a transmitting antenna located within 25 mm from that surface or edge. When the form factor of a handset is smaller than 9 cm x 5 cm, a test separation distance of 5 mm (instead of 10 mm) is required for testing hotspot mode. When the separation distance required for body-worn accessory testing is larger than or equal to that tested for hotspot mode, in the same wireless mode and for the same surface of the phone, the hotspot mode SAR data may be used to support body-worn accessory SAR compliance for that particular configuration (surface).

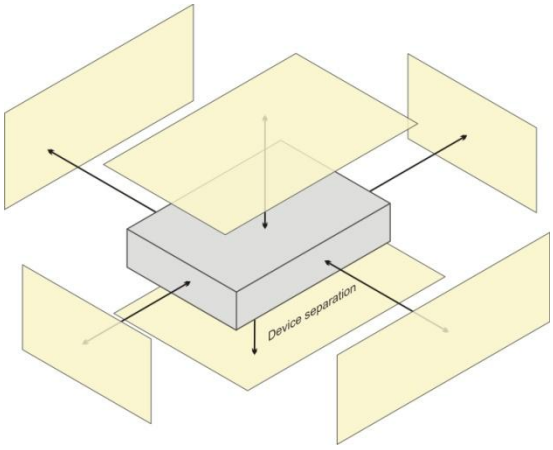

Based on the antenna location shown on appendix D of this report, the SAR testing required for hotspot mode is listed as below.

Antenna	Front Face	Rear Face	Left Side	Right Side	Top Side	Bottom Side
WWAN	V	V	V	V	-	V
WLAN / BT	V	V	-	V	V	-

4.2.4 SAR Test Exclusions

According to KDB 447498 D01, the SAR test exclusion condition is based on source-based time-averaged maximum conducted output power, adjusted for tune-up tolerance, and the minimum test separation distance required for the exposure conditions. The SAR exclusion threshold is determined by the following formula.

$$\frac{\mathbf{Max.\,Tune\ up\ Power_{(mW)}}}{\mathbf{Min.\,Test\ Separation\ Distance_{(mm)}}} \times \sqrt{\mathbf{f_{(GHz)}}} \leq \mathbf{3.0\ for\ SAR\text{-}1g,\ \leq 7.5\ for\ SAR\text{-}10g}$$

When the minimum test separation distance is < 5 mm, a distance of 5 mm is applied to determine SAR test exclusion.

Mode	Max. Tune-up Power (dBm)	Max. Tune-up Power (mW)	Head			Body-Worn			Hotspot		
			Ant. to Surface (mm)	Calculated Result	Require SAR Testing?	Ant. to Surface (mm)	Calculated Result	Require SAR Testing?	Ant. to Surface (mm)	Calculated Result	Require SAR Testing?
BT	8.5	7	5	2.2	No	10	1.1	No	10	1.1	No

Note: When separation distance <= 50 mm and the calculated result shown in above table is <= 3.0, the SAR testing exclusion is applied.

4.3 Tissue Verification

The measuring results for tissue simulating liquid are shown as below.

Test Date	Tissue Type	Frequency (MHz)	Liquid Temp. (℃)	Measured Conductivity (σ)	Measured Permittivity (ε_r)	Target Conductivity (σ)	Target Permittivity (ε_r)	Conductivity Deviation (%)	Permittivity Deviation (%)
Nov. 22, 2014	Head	750	21.8	0.912	40.638	0.89	41.9	2.47	-3.01
Nov. 22, 2014	Head	835	21.6	0.908	42.576	0.90	41.5	0.89	2.59
Nov. 23, 2014	Head	1750	21.9	1.387	41.405	1.37	40.1	1.24	3.25
Nov. 23, 2014	Head	1900	21.8	1.405	39.670	1.40	40.0	0.36	-0.82
Dec. 05, 2014	Head	2450	21.5	1.809	39.923	1.80	39.2	0.50	1.84
Nov. 26, 2014	Head	2600	21.5	2.053	37.984	1.96	39.0	4.74	-2.61
Dec. 05, 2014	Head	5200	21.7	4.766	35.016	4.66	36.0	2.27	-2.73
Dec. 05, 2014	Head	5300	21.7	4.874	34.870	4.76	35.9	2.39	-2.87
Dec. 05, 2014	Head	5600	21.7	5.235	34.350	5.07	35.5	3.25	-3.24
Dec. 05, 2014	Head	5800	21.7	5.456	33.957	5.27	35.3	3.53	-3.80
Nov. 25, 2014	Body	750	21.5	0.966	55.176	0.96	55.5	0.63	-0.58
Nov. 25, 2014	Body	835	21.5	0.955	55.941	0.97	55.2	-1.55	1.34
Nov. 24, 2014	Body	1750	21.3	1.486	52.091	1.49	53.4	-0.27	-2.45
Nov. 24, 2014	Body	1900	21.3	1.558	55.468	1.52	53.3	2.50	4.07
Nov. 25, 2014	Body	1900	21.4	1.553	53.382	1.52	53.3	2.17	0.15
Dec. 05, 2014	Body	2450	21.7	1.972	51.360	1.95	52.7	1.13	-2.54
Nov. 24, 2014	Body	2600	21.3	2.177	52.076	2.16	52.5	0.79	-0.81
Dec. 08, 2014	Body	5200	21.7	5.327	47.281	5.30	49.0	0.51	-3.51
Dec. 08, 2014	Body	5300	21.7	5.462	47.107	5.42	48.9	0.77	-3.67
Dec. 08, 2014	Body	5600	21.7	5.898	46.563	5.77	48.5	2.22	-3.99
Dec. 08, 2014	Body	5800	21.7	6.202	46.480	6.00	48.2	3.37	-3.57

Note:

The dielectric properties of the tissue simulating liquid must be measured within 24 hours before the SAR testing and within ±5% of the target values. Liquid temperature during the SAR testing must be within ±2 ℃.

4.4 System Validation

The SAR measurement system was validated according to procedures in KDB 865664 D01. The validation status in tabulated summary is as below.

Test Date	Probe S/N	Calibration Point		Measured Conductivity (σ)	Measured Permittivity (ε_r)	Validation for CW			Validation for Modulation		
						Sensitivity Range	Probe Linearity	Probe Isotropy	Modulation Type	Duty Factor	PAR
Nov. 22, 2014	3864	Head	750	0.912	40.638	Pass	Pass	Pass	N/A	N/A	N/A
Nov. 22, 2014	3864	Head	835	0.908	42.576	Pass	Pass	Pass	GMSK	Pass	N/A
Nov. 23, 2014	3864	Head	1750	1.387	41.405	Pass	Pass	Pass	N/A	N/A	N/A
Nov. 23, 2014	3864	Head	1900	1.405	39.670	Pass	Pass	Pass	GMSK	Pass	N/A
Dec. 05, 2014	3590	Head	2450	1.809	39.923	Pass	Pass	Pass	OFDM	N/A	Pass
Nov. 26, 2014	3650	Head	2600	2.053	37.984	Pass	Pass	Pass	N/A	N/A	N/A
Dec. 05, 2014	3590	Head	5200	4.766	35.016	Pass	Pass	Pass	OFDM	N/A	Pass
Dec. 05, 2014	3590	Head	5300	4.874	34.870	Pass	Pass	Pass	OFDM	N/A	Pass
Dec. 05, 2014	3590	Head	5600	5.235	34.350	Pass	Pass	Pass	OFDM	N/A	Pass
Dec. 05, 2014	3590	Head	5800	5.456	33.957	Pass	Pass	Pass	OFDM	N/A	Pass
Nov. 25, 2014	3650	Body	750	0.966	55.176	Pass	Pass	Pass	N/A	N/A	N/A
Nov. 25, 2014	3650	Body	835	0.955	55.941	Pass	Pass	Pass	GMSK	Pass	N/A
Nov. 24, 2014	3650	Body	1750	1.486	52.091	Pass	Pass	Pass	N/A	N/A	N/A
Nov. 24, 2014	3650	Body	1900	1.558	55.468	Pass	Pass	Pass	GMSK	Pass	N/A
Nov. 25, 2014	3650	Body	1900	1.553	53.382	Pass	Pass	Pass	N/A	N/A	N/A
Dec. 05, 2014	3590	Body	2450	1.972	51.360	Pass	Pass	Pass	OFDM	N/A	Pass
Nov. 24, 2014	3650	Body	2600	2.177	52.076	Pass	Pass	Pass	N/A	N/A	N/A
Dec. 08, 2014	3590	Body	5200	5.327	47.281	Pass	Pass	Pass	OFDM	N/A	Pass
Dec. 08, 2014	3590	Body	5300	5.462	47.107	Pass	Pass	Pass	OFDM	N/A	Pass
Dec. 08, 2014	3590	Body	5600	5.898	46.563	Pass	Pass	Pass	OFDM	N/A	Pass
Dec. 08, 2014	3590	Body	5800	6.202	46.480	Pass	Pass	Pass	OFDM	N/A	Pass

4.5 System Verification

The measuring result for system verification is tabulated as below.

Test Date	Mode	Frequency (MHz)	1W Target SAR-1g (W/kg)	Measured SAR-1g (W/kg)	Normalized to 1W SAR-1g (W/kg)	Deviation (%)	Dipole S/N	Probe S/N	DAE S/N
Nov. 22, 2014	Head	750	8.35	2.22	8.88	6.35	1013	3864	510
Nov. 22, 2014	Head	835	9.43	2.41	9.64	2.23	4d121	3864	510
Nov. 23, 2014	Head	1750	37.30	9.02	36.08	-3.27	1055	3864	510
Nov. 23, 2014	Head	1900	40.60	9.96	39.84	-1.87	5d036	3864	510
Dec. 05, 2014	Head	2450	51.00	12.40	49.60	-2.75	737	3590	861
Nov. 26, 2014	Head	2600	57.50	14.50	58.00	0.87	1020	3650	1277
Dec. 05, 2014	Head	5200	79.70	7.87	78.70	-1.25	1019	3590	861
Dec. 05, 2014	Head	5300	83.40	8.49	84.90	1.80	1019	3590	861
Dec. 05, 2014	Head	5600	83.80	8.46	84.60	0.95	1019	3590	861
Dec. 05, 2014	Head	5800	80.20	7.99	79.90	-0.37	1019	3590	861
Nov. 25, 2014	Body	750	8.71	2.35	9.40	7.92	1013	3650	1277
Nov. 25, 2014	Body	835	9.55	2.45	9.80	2.62	4d121	3650	1277
Nov. 24, 2014	Body	1750	37.70	8.81	35.24	-6.53	1055	3650	1277
Nov. 24, 2014	Body	1900	41.00	9.48	37.92	-7.51	5d036	3650	1277
Nov. 25, 2014	Body	1900	41.00	9.67	38.68	-5.66	5d036	3650	1277
Dec. 05, 2014	Body	2450	49.50	13.2	52.80	6.67	737	3590	861
Nov. 24, 2014	Body	2600	56.50	13.6	54.40	-3.72	1020	3650	1277
Dec. 08, 2014	Body	5200	74.7	7.03	70.30	-5.89	1019	3590	861
Dec. 08, 2014	Body	5300	77.10	7.31	73.10	-5.19	1019	3590	861
Dec. 08, 2014	Body	5600	80.80	7.44	74.40	-7.92	1019	3590	861
Dec. 08, 2014	Body	5800	73.90	7.00	70.00	-5.28	1019	3590	861

Note:

Comparing to the reference SAR value provided by SPEAG, the validation data should be within its specification of 10 %. The result indicates the system check can meet the variation criterion and the plots can be referred to Appendix A of this report.

4.6 Maximum Output Power

4.6.1 Maximum Conducted Power

The maximum conducted average power (Unit: dBm) including tune-up tolerance is shown as below.

Mode	GSM850	GSM1900
GSM (GMSK, 1Tx-slot)	32.0	30.0
GPRS (GMSK, 1Tx-slot)	32.0	29.5
GPRS (GMSK, 2Tx-slot)	30.0	27.5
EDGE (GMSK, 1Tx-slot)	32.0	29.5
EDGE (GMSK, 2Tx-slot)	30.0	27.5
EDGE (8PSK, 1Tx-slot)	26.5	25.5
EDGE (8PSK, 2Tx-slot)	26.5	25.5

Mode	WCDMA Band II	WCDMA Band V
RMC 12.2K	23.5	23.0
HSDPA	22.5	22.5
HSUPA	22.5	22.0

Mode	LTE 2	LTE 4
QPSK / 16QAM	24.5	25.0

Mode	LTE 5	LTE 7
QPSK / 16QAM	24.5	25.0

Mode	LTE 17
QPSK / 16QAM	24.5

Mode	2.4G WLAN	5.2G WLAN	5.3G WLAN	5.6G WLAN	5.8G WLAN
802.11b	19.0	N/A	N/A	N/A	N/A
802.11g	16.0	N/A	N/A	N/A	N/A
802.11a	N/A	15.5	15.5	15.5	15.5
802.11n HT20	15.0	15.5	15.5	15.5	15.5
802.11n HT40	N/A	15.5	15.5	15.5	15.5

Mode	Bluetooth
All	8.5

4.6.2 Measured Conducted Power Result

The measuring conducted average power (Unit: dBm) is shown as below.

Band	GSM850			GSM1900		
Channel	128	189	251	512	661	810
Frequency (MHz)	824.2	836.4	848.8	1850.2	1880.0	1909.8
Maximum Burst-Averaged Output Power						
GSM (GMSK, 1Tx-slot)	31.67	31.73	**31.79**	29.18	29.42	**29.52**
GPRS (GMSK, 1Tx-slot)	31.50	31.78	31.74	29.16	29.38	29.48
GPRS (GMSK, 2Tx-slot)	29.69	29.71	29.83	27.23	27.34	27.50
EDGE (GMSK, 1Tx-slot)	31.41	31.76	31.70	29.10	29.33	29.42
EDGE (GMSK, 2Tx-slot)	29.69	29.64	29.77	27.20	27.35	27.45
EDGE (8PSK, 1Tx-slot)	26.57	26.54	26.60	25.17	25.34	25.50
EDGE (8PSK, 2Tx-slot)	26.39	26.38	26.48	25.14	25.31	25.47
Maximum Frame-Averaged Output Power						
GSM (GMSK, 1Tx-slot)	22.67	22.73	22.79	20.18	20.42	20.52
GPRS (GMSK, 1Tx-slot)	22.50	22.78	22.74	20.16	20.38	20.48
GPRS (GMSK, 2Tx-slot)	23.69	23.71	**23.83**	21.23	21.34	**21.50**
EDGE (GMSK, 1Tx-slot)	22.41	22.76	22.70	20.10	20.33	20.42
EDGE (GMSK, 2Tx-slot)	23.69	23.64	23.77	21.20	21.35	21.45
EDGE (8PSK, 1Tx-slot)	17.57	17.54	17.60	16.17	16.34	16.50
EDGE (8PSK, 2Tx-slot)	20.39	20.38	20.48	19.14	19.31	19.47

Note:

1. SAR testing was performed on the maximum frame-averaged power mode.
2. The frame-averaged power is linearly proportion to the slot number configured and it is linearly scaled the maximum burst-averaged power based on time slots. The calculated method is shown as below:
   Frame-averaged power = 10 x log (Burst-averaged power mW x Slot used / 8)

Band	WCDMA Band II			WCDMA Band V			3GPP MPR (dB)
Channel	9262	9400	9538	4132	4182	4233	
Frequency (MHz)	1852.4	1880.0	1907.6	826.4	836.4	846.6	
RMC 12.2K	22.97	**23.14**	22.83	22.72	**22.74**	22.71	-
HSDPA Subtest-1	22.24	22.34	22.16	21.95	22.01	22.07	0
HSDPA Subtest-2	22.16	22.24	22.14	21.85	21.90	21.83	0
HSDPA Subtest-3	21.79	21.82	21.65	21.48	21.49	21.58	0.5
HSDPA Subtest-4	21.40	21.49	21.60	21.45	21.48	21.57	0.5
HSUPA Subtest-1	22.20	22.30	22.12	21.91	22.00	21.94	0
HSUPA Subtest-2	20.95	21.12	20.99	20.83	20.84	20.81	2
HSUPA Subtest-3	21.51	21.49	21.38	21.21	21.22	20.97	1
HSUPA Subtest-4	20.78	20.93	20.81	20.63	20.63	20.69	2
HSUPA Subtest-5	22.16	21.85	21.73	21.85	21.37	21.90	0

LTE Band / BW	RB Size	RB Offset	QPSK			3GPP MPR (dB)	16QAM			3GPP MPR (dB)
			Low CH 18607 1850.7 MHz	Mid CH 18900 1880.0 MHz	High CH 19193 1909.3 MHz		Low CH 18607 1850.7 MHz	Mid CH 18900 1880.0 MHz	High CH 19193 1909.3 MHz	
2 / 1.4M	1	0	23.51	23.55	23.69	0	22.49	22.53	22.67	1
	1	2	23.40	23.36	23.40	0	22.38	22.34	22.38	1
	1	5	23.28	23.49	23.16	0	22.26	22.47	22.14	1
	3	0	23.43	23.59	23.67	0	22.41	22.57	22.65	1
	3	1	23.33	23.52	23.57	0	22.31	22.50	22.55	1
	3	3	23.40	23.51	23.45	0	22.38	22.49	22.43	1
	6	0	22.34	22.48	22.65	1	21.32	21.46	21.63	2

LTE Band / BW	RB Size	RB Offset	QPSK			3GPP MPR (dB)	16QAM			3GPP MPR (dB)
			Low CH 18615 1851.5 MHz	Mid CH 18900 1880.0 MHz	High CH 19185 1908.5 MHz		Low CH 18615 1851.5 MHz	Mid CH 18900 1880.0 MHz	High CH 19185 1908.5 MHz	
2 / 3M	1	0	23.64	23.68	23.82	0	22.62	22.66	22.80	1
	1	7	23.53	23.49	23.53	0	22.51	22.47	22.51	1
	1	14	23.41	23.62	23.29	0	22.39	22.60	22.27	1
	8	0	22.56	22.72	22.80	1	21.54	21.70	21.78	2
	8	3	22.46	22.65	22.70	1	21.44	21.63	21.68	2
	8	7	22.53	22.64	22.58	1	21.51	21.62	21.56	2
	15	0	22.47	22.61	22.78	1	21.45	21.59	21.76	2

LTE Band / BW	RB Size	RB Offset	QPSK			3GPP MPR (dB)	16QAM			3GPP MPR (dB)
			Low CH 18625 1852.5 MHz	Mid CH 18900 1880.0 MHz	High CH 19175 1907.5 MHz		Low CH 18625 1852.5 MHz	Mid CH 18900 1880.0 MHz	High CH 19175 1907.5 MHz	
2 / 5M	1	0	23.72	23.76	23.90	0	22.70	22.74	22.88	1
	1	12	23.61	23.57	23.61	0	22.59	22.55	22.59	1
	1	24	23.49	23.70	23.37	0	22.47	22.68	22.35	1
	12	0	22.64	22.80	22.88	1	21.62	21.78	21.86	2
	12	6	22.54	22.73	22.78	1	21.52	21.71	21.76	2
	12	13	22.61	22.72	22.66	1	21.59	21.70	21.64	2
	25	0	22.55	22.69	22.86	1	21.53	21.67	21.84	2

LTE Band / BW	RB Size	RB Offset	QPSK			3GPP MPR (dB)	16QAM			3GPP MPR (dB)
			Low CH 18650 1855.0 MHz	Mid CH 18900 1880.0 MHz	High CH 19150 1905.0 MHz		Low CH 18650 1855.0 MHz	Mid CH 18900 1880.0 MHz	High CH 19150 1905.0 MHz	
2 / 10M	1	0	23.82	23.86	24.00	0	22.80	22.84	22.98	1
	1	24	23.71	23.67	23.71	0	22.69	22.65	22.69	1
	1	49	23.59	23.80	23.47	0	22.57	22.78	22.45	1
	25	0	22.74	22.90	22.98	1	21.72	21.88	21.96	2
	25	12	22.64	22.83	22.88	1	21.62	21.81	21.86	2
	25	25	22.71	22.82	22.76	1	21.69	21.80	21.74	2
	50	0	22.65	22.79	22.96	1	21.63	21.77	21.94	2

LTE Band / BW	RB Size	RB Offset	QPSK Low CH 18675 1857.5 MHz	QPSK Mid CH 18900 1880.0 MHz	QPSK High CH 19125 1902.5 MHz	3GPP MPR (dB)	16QAM Low CH 18675 1857.5 MHz	16QAM Mid CH 18900 1880.0 MHz	16QAM High CH 19125 1902.5 MHz	3GPP MPR (dB)
2 / 15M	1	0	23.91	23.95	24.09	0	22.89	22.93	23.07	1
	1	37	23.80	23.76	23.80	0	22.78	22.74	22.78	1
	1	74	23.68	23.89	23.56	0	22.66	22.87	22.54	1
	36	0	22.83	22.99	23.07	1	21.81	21.97	22.05	2
	36	19	22.73	22.92	22.97	1	21.71	21.90	21.95	2
	36	39	22.80	22.91	22.85	1	21.78	21.89	21.83	2
	75	0	22.74	22.88	23.05	1	21.72	21.86	22.03	2

LTE Band / BW	RB Size	RB Offset	QPSK Low CH 18700 1860.0 MHz	QPSK Mid CH 18900 1880.0 MHz	QPSK High CH 19100 1900.0 MHz	3GPP MPR (dB)	16QAM Low CH 18700 1860.0 MHz	16QAM Mid CH 18900 1880.0 MHz	16QAM High CH 19100 1900.0 MHz	3GPP MPR (dB)
2 / 20M	1	0	24.04	24.08	**24.22**	0	23.02	23.06	23.20	1
	1	50	23.93	23.89	23.93	0	22.91	22.87	22.91	1
	1	99	23.81	24.02	23.69	0	22.79	23.00	22.67	1
	50	0	22.96	23.12	23.20	1	21.94	22.10	22.18	2
	50	25	22.86	23.05	23.10	1	21.84	22.03	22.08	2
	50	50	22.93	23.04	22.98	1	21.91	22.02	21.96	2
	100	0	22.87	23.01	23.18	1	21.85	21.99	22.16	2

LTE Band / BW	RB Size	RB Offset	QPSK Low CH 19957 1710.7 MHz	QPSK Mid CH 20175 1732.5 MHz	QPSK High CH 20393 1754.3 MHz	3GPP MPR (dB)	16QAM Low CH 19957 1710.7 MHz	16QAM Mid CH 20175 1732.5 MHz	16QAM High CH 20393 1754.3 MHz	3GPP MPR (dB)
4 / 1.4M	1	0	23.89	23.81	24.00	0	22.84	22.76	22.95	1
	1	2	23.17	23.00	22.85	0	22.12	21.95	21.80	1
	1	5	22.88	22.94	23.90	0	21.83	21.89	22.85	1
	3	0	23.89	23.90	23.94	0	22.84	22.85	22.89	1
	3	1	23.87	23.88	23.75	0	22.82	22.83	22.70	1
	3	3	23.67	23.85	23.63	0	22.62	22.80	22.58	1
	6	0	22.85	22.82	22.91	1	21.80	21.77	21.86	2

LTE Band / BW	RB Size	RB Offset	QPSK Low CH 19965 1711.5 MHz	QPSK Mid CH 20175 1732.5 MHz	QPSK High CH 20385 1753.5 MHz	3GPP MPR (dB)	16QAM Low CH 19965 1711.5 MHz	16QAM Mid CH 20175 1732.5 MHz	16QAM High CH 20385 1753.5 MHz	3GPP MPR (dB)
4 / 3M	1	0	23.97	23.89	24.08	0	22.92	22.84	23.03	1
	1	7	23.25	23.08	22.93	0	22.20	22.03	21.88	1
	1	14	22.96	23.02	23.98	0	21.91	21.97	22.93	1
	8	0	22.97	22.98	23.02	1	21.92	21.93	21.97	2
	8	3	22.95	22.96	22.83	1	21.90	21.91	21.78	2
	8	7	22.75	22.93	23.71	1	21.70	21.88	22.66	2
	15	0	22.93	22.90	22.99	1	21.88	21.85	21.94	2

LTE Band / BW	RB Size	RB Offset	QPSK Low CH 19975 1712.5 MHz	QPSK Mid CH 20175 1732.5 MHz	QPSK High CH 20375 1752.5 MHz	3GPP MPR (dB)	16QAM Low CH 19975 1712.5 MHz	16QAM Mid CH 20175 1732.5 MHz	16QAM High CH 20375 1752.5 MHz	3GPP MPR (dB)
4 / 5M	1	0	24.10	24.02	24.21	0	23.05	22.97	23.16	1
	1	12	23.38	23.21	23.06	0	22.33	22.16	22.01	1
	1	24	23.09	23.15	24.11	0	22.04	22.10	23.06	1
	12	0	23.10	23.11	23.15	1	22.05	22.06	22.10	2
	12	6	23.08	23.09	22.96	1	22.03	22.04	21.91	2
	12	13	22.88	23.06	23.84	1	21.83	22.01	22.79	2
	25	0	23.06	23.03	23.12	1	22.01	21.98	22.07	2

LTE Band / BW	RB Size	RB Offset	QPSK Low CH 20000 1715.0 MHz	QPSK Mid CH 20175 1732.5 MHz	QPSK High CH 20350 1750.0 MHz	3GPP MPR (dB)	16QAM Low CH 20000 1715.0 MHz	16QAM Mid CH 20175 1732.5 MHz	16QAM High CH 20350 1750.0 MHz	3GPP MPR (dB)
4 / 10M	1	0	24.19	24.11	24.30	0	23.14	23.06	23.25	1
	1	24	23.47	23.30	23.15	0	22.42	22.25	22.10	1
	1	49	23.18	23.24	24.20	0	22.13	22.19	23.15	1
	25	0	23.19	23.20	23.24	1	22.14	22.15	22.19	2
	25	12	23.17	23.18	23.05	1	22.12	22.13	22.00	2
	25	25	22.97	23.15	23.93	1	21.92	22.10	22.88	2
	50	0	23.15	23.12	23.21	1	22.10	22.07	22.16	2

LTE Band / BW	RB Size	RB Offset	QPSK Low CH 20025 1717.5 MHz	QPSK Mid CH 20175 1732.5 MHz	QPSK High CH 20325 1747.5 MHz	3GPP MPR (dB)	16QAM Low CH 20025 1717.5 MHz	16QAM Mid CH 20175 1732.5 MHz	16QAM High CH 20325 1747.5 MHz	3GPP MPR (dB)
4 / 15M	1	0	24.29	24.21	24.40	0	23.24	23.16	23.35	1
	1	37	23.57	23.40	23.25	0	22.52	22.35	22.20	1
	1	74	23.28	23.34	24.30	0	22.23	22.29	23.25	1
	36	0	23.29	23.30	23.34	1	22.24	22.25	22.29	2
	36	19	23.27	23.28	23.15	1	22.22	22.23	22.10	2
	36	39	23.07	23.25	24.03	1	22.02	22.20	22.98	2
	75	0	23.25	23.22	23.31	1	22.20	22.17	22.26	2

LTE Band / BW	RB Size	RB Offset	QPSK Low CH 20050 1720.0 MHz	QPSK Mid CH 20175 1732.5 MHz	QPSK High CH 20300 1745.0 MHz	3GPP MPR (dB)	16QAM Low CH 20050 1720.0 MHz	16QAM Mid CH 20175 1732.5 MHz	16QAM High CH 20300 1745.0 MHz	3GPP MPR (dB)
4 / 20M	1	0	24.41	24.33	**24.52**	0	23.36	23.28	23.47	1
	1	50	23.69	23.52	23.37	0	22.64	22.47	22.32	1
	1	99	23.40	23.46	24.42	0	22.35	22.41	23.37	1
	50	0	23.41	23.42	23.46	1	22.36	22.37	22.41	2
	50	25	23.39	23.40	23.27	1	22.34	22.35	22.22	2
	50	50	23.19	23.37	24.15	1	22.14	22.32	23.10	2
	100	0	23.37	23.34	23.43	1	22.32	22.29	22.38	2

LTE Band / BW	RB Size	RB Offset	QPSK			3GPP MPR (dB)	16QAM			3GPP MPR (dB)
			Low CH 20407	Mid CH 20525	High CH 20643		Low CH 20407	Mid CH 20525	High CH 20643	
			824.7 MHz	836.5 MHz	848.3 MHz		824.7 MHz	836.5 MHz	848.3 MHz	
5 / 1.4M	1	0	23.79	23.84	23.85	0	22.75	22.80	22.81	1
	1	2	22.72	22.74	22.81	0	21.68	21.70	21.77	1
	1	5	22.92	23.73	23.66	0	21.88	22.69	22.62	1
	3	0	23.73	23.71	23.84	0	22.69	22.67	22.80	1
	3	1	23.69	23.63	23.77	0	22.65	22.59	22.73	1
	3	3	23.71	23.62	23.76	0	22.67	22.58	22.72	1
	6	0	22.68	22.70	22.80	1	21.64	21.66	21.76	2

LTE Band / BW	RB Size	RB Offset	QPSK			3GPP MPR (dB)	16QAM			3GPP MPR (dB)
			Low CH 20415	Mid CH 20525	High CH 20635		Low CH 20415	Mid CH 20525	High CH 20635	
			825.5 MHz	836.5 MHz	847.5 MHz		825.5 MHz	836.5 MHz	847.5 MHz	
5 / 3M	1	0	23.86	23.91	23.92	0	22.82	22.87	22.88	1
	1	7	22.79	22.81	22.88	0	21.75	21.77	21.84	1
	1	14	22.99	23.80	23.73	0	21.95	22.76	22.69	1
	8	0	22.80	22.78	22.91	1	21.76	21.74	21.87	2
	8	3	22.76	22.70	22.84	1	21.72	21.66	21.80	2
	8	7	22.78	22.69	22.83	1	21.74	21.65	21.79	2
	15	0	22.75	22.77	22.87	1	21.71	21.73	21.83	2

LTE Band / BW	RB Size	RB Offset	QPSK			3GPP MPR (dB)	16QAM			3GPP MPR (dB)
			Low CH 20425	Mid CH 20525	High CH 20625		Low CH 20425	Mid CH 20525	High CH 20625	
			826.5 MHz	836.5 MHz	846.5 MHz		826.5 MHz	836.5 MHz	846.5 MHz	
5 / 5M	1	0	23.95	24.00	24.01	0	22.91	22.96	22.97	1
	1	12	22.88	22.90	22.97	0	21.84	21.86	21.93	1
	1	24	23.08	23.89	23.82	0	22.04	22.85	22.78	1
	12	0	22.89	22.87	23.00	1	21.85	21.83	21.96	2
	12	6	22.85	22.79	22.93	1	21.81	21.75	21.89	2
	12	13	22.87	22.78	22.92	1	21.83	21.74	21.88	2
	25	0	22.84	22.86	22.96	1	21.80	21.82	21.92	2

LTE Band / BW	RB Size	RB Offset	QPSK			3GPP MPR (dB)	16QAM			3GPP MPR (dB)
			Low CH 20450	Mid CH 20525	High CH 20600		Low CH 20450	Mid CH 20525	High CH 20600	
			829.0 MHz	836.5 MHz	844.0 MHz		829.0 MHz	836.5 MHz	844.0 MHz	
5 / 10M	1	0	24.07	24.12	**24.13**	0	23.03	23.08	23.09	1
	1	24	23.00	23.02	23.09	0	21.96	21.98	22.05	1
	1	49	23.20	24.01	23.94	0	22.16	22.97	22.90	1
	25	0	23.01	22.99	23.12	1	21.97	21.95	22.08	2
	25	12	22.97	22.91	23.05	1	21.93	21.87	22.01	2
	25	25	22.99	22.90	23.04	1	21.95	21.86	22.00	2
	50	0	22.96	22.98	23.08	1	21.92	21.94	22.04	2

LTE Band / BW	RB Size	RB Offset	QPSK Low CH 20775 2502.5 MHz	QPSK Mid CH 21100 2535.0 MHz	QPSK High CH 21425 2567.5 MHz	3GPP MPR (dB)	16QAM Low CH 20775 2502.5 MHz	16QAM Mid CH 21100 2535.0 MHz	16QAM High CH 21425 2567.5 MHz	3GPP MPR (dB)
7 / 5M	1	0	24.20	24.29	24.21	0	23.15	23.24	23.16	1
	1	12	23.21	23.21	23.12	0	22.16	22.16	22.07	1
	1	24	23.20	24.20	24.08	0	22.15	23.15	23.03	1
	12	0	23.16	23.25	23.18	1	22.11	22.20	22.13	2
	12	6	23.11	23.07	23.06	1	22.06	22.02	22.01	2
	12	13	23.04	23.20	23.12	1	21.99	22.15	22.07	2
	25	0	23.04	23.22	23.15	1	21.99	22.17	22.10	2

LTE Band / BW	RB Size	RB Offset	QPSK Low CH 20800 2505.0 MHz	QPSK Mid CH 21100 2535.0 MHz	QPSK High CH 21400 2565.0 MHz	3GPP MPR (dB)	16QAM Low CH 20800 2505.0 MHz	16QAM Mid CH 21100 2535.0 MHz	16QAM High CH 21400 2565.0 MHz	3GPP MPR (dB)
7 / 10M	1	0	24.29	24.38	24.30	0	23.24	23.33	23.25	1
	1	24	23.30	23.30	23.21	0	22.25	22.25	22.16	1
	1	49	23.29	24.29	24.17	0	22.24	23.24	23.12	1
	25	0	23.25	23.34	23.27	1	22.20	22.29	22.22	2
	25	12	23.20	23.16	23.15	1	22.15	22.11	22.10	2
	25	25	23.13	23.29	23.21	1	22.08	22.24	22.16	2
	50	0	23.13	23.31	23.24	1	22.08	22.26	22.19	2

LTE Band / BW	RB Size	RB Offset	QPSK Low CH 20825 2507.5 MHz	QPSK Mid CH 21100 2535.0 MHz	QPSK High CH 21375 2562.5 MHz	3GPP MPR (dB)	16QAM Low CH 20825 2507.5 MHz	16QAM Mid CH 21100 2535.0 MHz	16QAM High CH 21375 2562.5 MHz	3GPP MPR (dB)
7 / 15M	1	0	24.40	24.49	24.41	0	23.35	23.44	23.36	1
	1	37	23.41	23.41	23.32	0	22.36	22.36	22.27	1
	1	74	23.40	24.40	24.28	0	22.35	23.35	23.23	1
	36	0	23.36	23.45	23.38	1	22.31	22.40	22.33	2
	36	19	23.31	23.27	23.26	1	22.26	22.22	22.21	2
	36	39	23.24	23.40	23.32	1	22.19	22.35	22.27	2
	75	0	23.24	23.42	23.35	1	22.19	22.37	22.30	2

LTE Band / BW	RB Size	RB Offset	QPSK Low CH 20850 2510.0 MHz	QPSK Mid CH 21100 2535.0 MHz	QPSK High CH 21350 2560.0 MHz	3GPP MPR (dB)	16QAM Low CH 20850 2510.0 MHz	16QAM Mid CH 21100 2535.0 MHz	16QAM High CH 21350 2560.0 MHz	3GPP MPR (dB)
7 / 20M	1	0	24.52	**24.61**	24.53	0	23.47	23.56	23.48	1
	1	50	23.53	23.53	23.44	0	22.48	22.48	22.39	1
	1	99	23.52	24.52	24.40	0	22.47	23.47	23.35	1
	50	0	23.48	23.57	23.50	1	22.43	22.52	22.45	2
	50	25	23.43	23.39	23.38	1	22.38	22.34	22.33	2
	50	50	23.36	23.52	23.44	1	22.31	22.47	22.39	2
	100	0	23.36	23.54	23.47	1	22.31	22.49	22.42	2

LTE Band / BW	RB Size	RB Offset	QPSK			3GPP MPR (dB)	16QAM			3GPP MPR (dB)
			Low CH 23755	Mid CH 23790	High CH 23825		Low CH 23755	Mid CH 23790	High CH 23825	
			706.5 MHz	710.0 MHz	713.5 MHz		706.5 MHz	710.0 MHz	713.5 MHz	
17 / 5M	1	0	23.85	23.98	23.91	0	22.84	22.97	22.90	1
	1	12	22.95	22.90	22.96	0	21.94	21.89	21.95	1
	1	24	22.94	23.84	23.89	0	21.93	22.83	22.88	1
	12	0	22.86	22.97	22.94	1	21.85	21.96	21.93	2
	12	6	22.85	22.96	22.90	1	21.84	21.95	21.89	2
	12	13	22.80	22.89	22.91	1	21.79	21.88	21.90	2
	25	0	22.93	22.95	22.92	1	21.92	21.94	21.91	2

LTE Band / BW	RB Size	RB Offset	QPSK			3GPP MPR (dB)	16QAM			3GPP MPR (dB)
			Low CH 23780	Mid CH 23790	High CH 23800		Low CH 23780	Mid CH 23790	High CH 23800	
			709.0 MHz	710.0 MHz	711.0 MHz		709.0 MHz	710.0 MHz	711.0 MHz	
17 / 10M	1	0	23.96	**24.09**	24.02	0	22.95	23.08	23.01	1
	1	24	23.01	23.07	23.06	0	22.05	22.00	22.06	1
	1	49	23.05	24.00	23.95	0	22.04	22.94	22.99	1
	25	0	22.97	23.08	23.05	1	21.96	22.07	22.04	2
	25	12	22.96	23.07	23.01	1	21.95	22.06	22.00	2
	25	25	22.91	23.00	23.02	1	21.90	21.99	22.01	2
	50	0	23.04	23.06	23.03	1	22.03	22.05	22.02	2

<WLAN 2.4G>

Mode	802.11b		
Channel / Frequency (MHz)	1 (2412)	6 (2437)	11 (2462)
Average Power	**18.63**	18.25	18.34
Mode	802.11g		
Channel / Frequency (MHz)	1 (2412)	6 (2437)	11 (2462)
Average Power	15.87	15.82	**15.98**
Mode	802.11n (HT20)		
Channel / Frequency (MHz)	1 (2412)	6 (2437)	11 (2462)
Average Power	14.89	**14.91**	14.89

<WLAN 5.2G>

Mode	802.11a			
Channel / Frequency (MHz)	36 (5180)	40 (5200)	44 (5220)	48 (5240)
Average Power	14.93	14.98	15.02	**15.19**
Mode	802.11n (HT20)			
Channel / Frequency (MHz)	36 (5180)	40 (5200)	44 (5220)	48 (5240)
Average Power	15.04	14.92	15.14	**15.40**
Mode	802.11n (HT40)			
Channel / Frequency (MHz)	38 (5190)		46 (5230)	
Average Power	**15.46**		15.08	

<WLAN 5.3G>

Mode	802.11a			
Channel / Frequency (MHz)	52 (5260)	56 (5280)	60 (5300)	64 (5320)
Average Power	14.89	14.93	14.78	**15.30**
Mode	802.11n (HT20)			
Channel / Frequency (MHz)	52 (5260)	56 (5280)	60 (5300)	64 (5320)
Average Power	14.78	14.82	14.80	**15.34**
Mode	802.11n (HT40)			
Channel / Frequency (MHz)	54 (5270)		62 (5310)	
Average Power	15.16		**15.32**	

<WLAN 5.6G>

Mode	802.11a							
Channel / Frequency (MHz)	100 (5500)	104 (5520)	108 (5540)	112 (5560)	116 (5580)	132 (5660)	136 (5680)	140 (5700)
Average Power	**15.08**	14.86	14.92	14.88	14.80	14.32	14.87	14.93
Mode	802.11n (HT20)							
Channel / Frequency (MHz)	100 (5500)	104 (5520)	108 (5540)	112 (5560)	116 (5580)	132 (5660)	136 (5680)	140 (5700)
Average Power	**15.12**	14.78	14.85	14.96	14.82	14.88	14.82	14.94
Mode	802.11n (HT40)							
Channel / Frequency (MHz)	102 (5510)				134 (5670)			
Average Power	**15.37**				15.12			

<WLAN 5.8G>

Mode	802.11a			
Channel / Frequency (MHz)	149 (5745)	153 (5765)	157 (5785)	161 (5805)
Average Power	15.30	15.24	**15.34**	15.23
Mode	802.11n (HT20)			
Channel / Frequency (MHz)	149 (5745)	153 (5765)	157 (5785)	161 (5805)
Average Power	15.28	15.26	**15.33**	15.28
Mode	802.11n (HT40)			
Channel / Frequency (MHz)	151 (5755)		159 (5795)	
Average Power	**15.54**		15.43	

4.7 SAR Testing Results

4.7.1 SAR Results for Head

Plot No.	Band	Mode	Test Position	Ch.	Max. Tune-up Power (dBm)	Measured Conducted Power (dBm)	Scaling Factor	Power Drift (dB)	Measured SAR-1g (W/kg)	Scaled SAR-1g (W/kg)
	GSM850	GPRS10	Right Cheek	251	30.0	29.83	1.04	-0.02	0.444	0.46
	GSM850	GPRS10	Right Tilted	251	30.0	29.83	1.04	0.05	0.201	0.21
01	GSM850	GPRS10	Left Cheek	251	30.0	29.83	1.04	0.16	0.491	**0.51**
	GSM850	GPRS10	Left Tilted	251	30.0	29.83	1.04	0.07	0.217	0.23
	GSM1900	GPRS10	Right Cheek	810	27.5	27.50	1.00	0.05	0.222	0.22
	GSM1900	GPRS10	Right Tilted	810	27.5	27.50	1.00	0.06	0.121	0.12
02	GSM1900	GPRS10	Left Cheek	810	27.5	27.50	1.00	0.01	0.34	**0.34**
	GSM1900	GPRS10	Left Tilted	810	27.5	27.50	1.00	0.06	0.12	0.12
	WCDMA II	RMC12.2K	Right Cheek	9400	23.5	23.14	1.09	0.03	0.429	0.47
	WCDMA II	RMC12.2K	Right Tilted	9400	23.5	23.14	1.09	-0.09	0.226	0.25
03	WCDMA II	RMC12.2K	Left Cheek	9400	23.5	23.14	1.09	0.1	0.72	**0.78**
	WCDMA II	RMC12.2K	Left Tilted	9400	23.5	23.14	1.09	-0.03	0.207	0.22
	WCDMA V	RMC12.2K	Right Cheek	4182	23.0	22.74	1.06	-0.03	0.456	0.48
	WCDMA V	RMC12.2K	Right Tilted	4182	23.0	22.74	1.06	0.12	0.242	0.26
04	WCDMA V	RMC12.2K	Left Cheek	4182	23.0	22.74	1.06	0	0.514	**0.55**
	WCDMA V	RMC12.2K	Left Tilted	4182	23.0	22.74	1.06	0.03	0.257	0.27

Note:

1. SAR is performed on the highest power channel. When the reported SAR value of highest power channel is <= 0.8 W/kg, SAR testing for optional channel is not required.
2. Since GPRS of this device supports VOIP capability through 3rd party apps software, we have evaluated data mode for head SAR.

Plot No.	Band	Mode	Test Position	Ch.	RB#	RB Offset	Max. Tune-up Power (dBm)	Measured Conducted Power (dBm)	Scaling Factor	Power Drift (dB)	Measured SAR-1g (W/kg)	Scaled SAR-1g (W/kg)
	LTE 2	QPSK20M	Right Cheek	19100	1	0	24.5	24.22	1.07	0.03	0.597	0.64
	LTE 2	QPSK20M	Right Cheek	19100	50	0	23.5	23.20	1.07	0	0.433	0.46
	LTE 2	QPSK20M	Right Tilted	19100	1	0	24.5	24.22	1.07	0.02	0.344	0.37
	LTE 2	QPSK20M	Right Tilted	19100	50	0	23.5	23.20	1.07	0.11	0.239	0.26
	LTE 2	QPSK20M	Left Cheek	19100	1	0	24.5	24.22	1.07	-0.02	0.83	0.89
05	LTE 2	QPSK20M	Left Cheek	18700	1	0	24.5	24.04	1.11	-0.03	0.954	**1.06**
	LTE 2	QPSK20M	Left Cheek	18700	1	0	24.5	24.04	1.11	0.02	0.945	1.05
	LTE 2	QPSK20M	Left Cheek	18900	1	0	24.5	24.08	1.10	0.07	0.725	0.80
	LTE 2	QPSK20M	Left Cheek	19100	50	0	23.5	23.20	1.07	0.17	0.631	0.68
	LTE 2	QPSK20M	Left Cheek	19100	100	0	23.5	23.18	1.08	0.1	0.612	0.66
	LTE 2	QPSK20M	Left Tilted	19100	1	0	24.5	24.22	1.07	0.03	0.273	0.29
	LTE 2	QPSK20M	Left Tilted	19100	50	0	23.5	23.20	1.07	0.02	0.219	0.23
	LTE 4	QPSK20M	Right Cheek	20300	1	0	25.0	24.52	1.12	0.03	0.771	0.86
	LTE 4	QPSK20M	Right Cheek	20050	1	0	25.0	24.41	1.15	-0.09	0.645	0.74
	LTE 4	QPSK20M	Right Cheek	20175	1	0	25.0	24.33	1.17	0.04	0.731	0.85
	LTE 4	QPSK20M	Right Cheek	20300	50	0	24.0	23.46	1.13	0.11	0.538	0.61
	LTE 4	QPSK20M	Right Cheek	20300	100	0	24.0	23.43	1.14	-0.12	0.639	0.73
	LTE 4	QPSK20M	Right Tilted	20300	1	0	25.0	24.52	1.12	0.03	0.398	0.44
	LTE 4	QPSK20M	Right Tilted	20300	50	0	24.0	23.46	1.13	0.06	0.368	0.42
	LTE 4	QPSK20M	Left Cheek	20300	1	0	25.0	24.52	1.12	0.09	1.11	1.24
	LTE 4	QPSK20M	Left Cheek	20050	1	0	25.0	24.41	1.15	0.09	1.04	1.19
06	LTE 4	QPSK20M	Left Cheek	20175	1	0	25.0	24.33	1.17	0.16	1.12	**1.31**
	LTE 4	QPSK20M	Left Cheek	20175	1	0	25.0	24.33	1.17	0.08	1.1	1.28
	LTE 4	QPSK20M	Left Cheek	20300	50	0	24.0	23.46	1.13	0.13	0.817	0.93
	LTE 4	QPSK20M	Left Cheek	20050	50	0	24.0	23.41	1.15	0.04	0.746	0.85
	LTE 4	QPSK20M	Left Cheek	20175	50	0	24.0	23.42	1.14	-0.07	0.781	0.89
	LTE 4	QPSK20M	Left Cheek	20300	100	0	24.0	23.43	1.14	0.12	0.947	1.08
	LTE 4	QPSK20M	Left Tilted	20300	1	0	25.0	24.52	1.12	0.09	0.391	0.44
	LTE 4	QPSK20M	Left Tilted	20300	50	0	24.0	23.46	1.13	0.15	0.325	0.37
	LTE 5	QPSK10M	Right Cheek	20600	1	0	24.5	24.13	1.09	0.03	0.697	0.76
	LTE 5	QPSK10M	Right Cheek	20600	25	0	23.5	23.12	1.09	0.05	0.559	0.61
	LTE 5	QPSK10M	Right Tilted	20600	1	0	24.5	24.13	1.09	0.02	0.335	0.36
	LTE 5	QPSK10M	Right Tilted	20600	25	0	23.5	23.12	1.09	0.07	0.278	0.30
07	LTE 5	QPSK10M	Left Cheek	20600	1	0	24.5	24.13	1.09	-0.01	0.818	**0.89**
	LTE 5	QPSK10M	Left Cheek	20600	1	0	24.5	24.13	1.09	-0.01	0.806	0.88
	LTE 5	QPSK10M	Left Cheek	20450	1	0	24.5	24.07	1.10	0	0.661	0.73
	LTE 5	QPSK10M	Left Cheek	20525	1	0	24.5	24.12	1.09	0.12	0.753	0.82
	LTE 5	QPSK10M	Left Cheek	20600	25	0	23.5	23.12	1.09	0	0.629	0.69
	LTE 5	QPSK10M	Left Cheek	20600	50	0	23.5	23.08	1.10	0.01	0.657	0.72
	LTE 5	QPSK10M	Left Tilted	20600	1	0	24.5	24.13	1.09	0.06	0.379	0.41
	LTE 5	QPSK10M	Left Tilted	20600	25	0	23.5	23.12	1.09	-0.01	0.285	0.31

Note:

1. According to KDB 941225, LTE SAR testing for remaining RB offset configurations and required test channels is not required when the reported SAR of highest power 1RB configuration is less than 0.8 W/kg.
2. According to KDB 941225, LTE SAR testing for remaining RB offset configurations and required test channels is not required when the reported SAR of highest power 50% RB configuration is less than 0.8 W/kg.
3. According to KDB 941225, LTE SAR testing for 100% RB is not required when the maximum power of 100% RB is less than the maximum power of 1RB and 50% RB, and the highest reported SAR for 1RB and 50% RB is less than 0.8 W/kg.
4. According to KDB 941225, LTE SAR testing for 16QAM is not required when the maximum power of 16QAM is less 1/2 dB higher than QPSK, and the highest reported SAR of QPSK is less than 1.45 W/kg.
5. According to KDB 941225, LTE SAR testing for smaller channel bandwidth is not required when the maximum power of smaller channel bandwidth is less 1/2 dB higher than largest channel bandwidth, and the highest reported SAR of largest channel bandwidth is less than 1.45 W/kg.

Plot No.	Band	Mode	Test Position	Ch.	RB#	RB Offset	Max. Tune-up Power (dBm)	Measured Conducted Power (dBm)	Scaling Factor	Power Drift (dB)	Measured SAR-1g (W/kg)	Scaled SAR-1g (W/kg)
08	LTE 7	QPSK20M	Right Cheek	21100	1	0	25.0	24.61	1.09	-0.18	0.133	**0.15**
	LTE 7	QPSK20M	Right Cheek	21100	50	0	24.0	23.57	1.10	-0.17	0.102	0.11
	LTE 7	QPSK20M	Right Tilted	21100	1	0	25.0	24.61	1.09	0.11	0.034	0.04
	LTE 7	QPSK20M	Right Tilted	21100	50	0	24.0	23.57	1.10	0.11	0.026	0.03
	LTE 7	QPSK20M	Left Cheek	21100	1	0	25.0	24.61	1.09	0.13	0.114	0.12
	LTE 7	QPSK20M	Left Cheek	21100	50	0	24.0	23.57	1.10	0.13	0.087	0.10
	LTE 7	QPSK20M	Left Tilted	21100	1	0	25.0	24.61	1.09	0.11	0.032	0.04
	LTE 7	QPSK20M	Left Tilted	21100	50	0	24.0	23.57	1.10	0.14	0.025	0.03
	LTE 17	QPSK10M	Right Cheek	23790	1	0	24.5	24.09	1.10	0.07	0.365	0.40
	LTE 17	QPSK10M	Right Cheek	23790	25	0	23.5	23.08	1.10	0.09	0.3	0.33
	LTE 17	QPSK10M	Right Tilted	23790	1	0	24.5	24.09	1.10	0.06	0.178	0.20
	LTE 17	QPSK10M	Right Tilted	23790	25	0	23.5	23.08	1.10	0.02	0.153	0.17
09	LTE 17	QPSK10M	Left Cheek	23790	1	0	24.5	24.09	1.10	0.05	0.392	**0.43**
	LTE 17	QPSK10M	Left Cheek	23790	25	0	23.5	23.08	1.10	0.02	0.329	0.36
	LTE 17	QPSK10M	Left Tilted	23790	1	0	24.5	24.09	1.10	-0.01	0.188	0.21
	LTE 17	QPSK10M	Left Tilted	23790	25	0	23.5	23.08	1.10	0.02	0.155	0.17

Note:

1. According to KDB 941225, LTE SAR testing for remaining RB offset configurations and required test channels is not required when the reported SAR of highest power 1RB configuration is less than 0.8 W/kg.
2. According to KDB 941225, LTE SAR testing for remaining RB offset configurations and required test channels is not required when the reported SAR of highest power 50% RB configuration is less than 0.8 W/kg.
3. According to KDB 941225, LTE SAR testing for 100% RB is not required when the maximum power of 100% RB is less than the maximum power of 1RB and 50% RB, and the highest reported SAR for 1RB and 50% RB is less than 0.8 W/kg.
4. According to KDB 941225, LTE SAR testing for 16QAM is not required when the maximum power of 16QAM is less 1/2 dB higher than QPSK, and the highest reported SAR of QPSK is less than 1.45 W/kg.
5. According to KDB 941225, LTE SAR testing for smaller channel bandwidth is not required when the maximum power of smaller channel bandwidth is less 1/2 dB higher than largest channel bandwidth, and the highest reported SAR of largest channel bandwidth is less than 1.45 W/kg.

Plot No.	Band	Test Position	Ch.	Max. Tune-up Power (dBm)	Measured Conducted Power (dBm)	Scaling Factor	Power Drift (dB)	Measured SAR-1g (W/kg)	Scaled SAR-1g (W/kg)
	802.11b	Right Cheek	1	19.0	18.63	1.09	0.13	0.24	0.26
	802.11b	Right Tilted	1	19.0	18.63	1.09	0.03	0.203	0.22
10	802.11b	Left Cheek	1	19.0	18.63	1.09	0.16	0.312	**0.34**
	802.11b	Left Tilted	1	19.0	18.63	1.09	0.15	0.266	0.29
11	802.11a	Right Cheek	48	15.5	15.19	1.07	0.16	0.168	**0.18**
	802.11a	Right Tilted	48	15.5	15.19	1.07	0.18	0.14	0.15
	802.11a	Left Cheek	48	15.5	15.19	1.07	0.17	0.118	0.13
	802.11a	Left Tilted	48	15.5	15.19	1.07	0.01	0.075	0.08
	802.11a	Right Cheek	64	15.5	15.30	1.05	0.07	0.164	0.17
	802.11a	Right Tilted	64	15.5	15.30	1.05	0.05	0.141	0.15
12	802.11a	Left Cheek	64	15.5	15.30	1.05	0.06	0.194	**0.20**
	802.11a	Left Tilted	64	15.5	15.30	1.05	0.08	0.148	0.15
	802.11a	Right Cheek	100	15.5	15.08	1.10	0.07	0.101	0.11
	802.11a	Right Tilted	100	15.5	15.08	1.10	0.03	0.091	0.10
13	802.11a	Left Cheek	100	15.5	15.08	1.10	0.03	0.106	**0.12**
	802.11a	Left Tilted	100	15.5	15.08	1.10	0.02	0.033	0.04
	802.11a	Right Cheek	157	15.5	15.34	1.04	0.03	0.369	0.38
	802.11a	Right Tilted	157	15.5	15.34	1.04	0.04	0.359	0.37
14	802.11a	Left Cheek	157	15.5	15.34	1.04	0.02	0.421	**0.44**
	802.11a	Left Tilted	157	15.5	15.34	1.04	0.03	0.333	0.35

Note:

1. According to KDB 248227, when the extrapolated maximum peak SAR for the maximum output power channel is <= 1.6 W/kg and the 1g averaged SAR is <= 0.8 W/kg, WLAN SAR testing for other channels is not required.
2. SAR testing for 802.11g/n is not required when its maximum power is less than 1/4 dB higher than 802.11b.
3. SAR testing for 802.11n is not required when its maximum power is less than 1/4 dB higher than 802.11a.

4.7.2 SAR Results for Body-Worn (Separation Distance is 1.0 cm Gap)

Plot No.	Band	Mode	Test Position	Ch.	Max. Tune-up Power (dBm)	Measured Conducted Power (dBm)	Scaling Factor	Power Drift (dB)	Measured SAR-1g (W/kg)	Scaled SAR-1g (W/kg)
15	GSM850	GPRS10	Front Face	251	30.0	29.83	1.04	-0.03	0.517	**0.54**
	GSM850	GPRS10	Rear Face	251	30.0	29.83	1.04	0.12	0.517	0.54
16	GSM1900	GPRS10	Front Face	810	27.5	27.50	1.00	0.09	0.308	**0.31**
	GSM1900	GPRS10	Rear Face	810	27.5	27.50	1.00	-0.1	0.261	0.26
17	WCDMA II	RMC12.2K	Front Face	9400	23.5	23.14	1.09	0.01	0.556	**0.60**
	WCDMA II	RMC12.2K	Rear Face	9400	23.5	23.14	1.09	-0.18	0.43	0.47
18	WCDMA V	RMC12.2K	Front Face	4182	23.0	22.74	1.06	0.01	0.57	**0.61**
	WCDMA V	RMC12.2K	Rear Face	4182	23.0	22.74	1.06	0.08	0.518	0.55

Note:

1. SAR is performed on the highest power channel. When the reported SAR value of highest power channel is <= 0.8 W/kg, SAR testing for optional channel is not required.

Plot No.	Band	Mode	Test Position	Ch.	RB#	RB Offset	Max. Tune-up Power (dBm)	Measured Conducted Power (dBm)	Scaling Factor	Power Drift (dB)	Measured SAR-1g (W/kg)	Scaled SAR-1g (W/kg)
	LTE 2	QPSK20M	Front Face	19100	1	0	24.5	24.22	1.07	0.02	0.668	0.71
	LTE 2	QPSK20M	Front Face	19100	50	0	23.5	23.20	1.07	0.09	0.539	0.58
19	LTE 2	QPSK20M	Rear Face	19100	1	0	24.5	24.22	1.07	-0.17	0.685	**0.73**
	LTE 2	QPSK20M	Rear Face	19100	50	0	23.5	23.20	1.07	-0.16	0.548	0.59
20	LTE 4	QPSK20M	Front Face	20300	1	0	25.0	24.52	1.12	0.1	1.13	**1.26**
	LTE 4	QPSK20M	Front Face	20300	1	0	25.0	24.52	1.12	0.1	1.09	1.22
	LTE 4	QPSK20M	Front Face	20050	1	0	25.0	24.41	1.15	0.14	0.976	1.12
	LTE 4	QPSK20M	Front Face	20175	1	0	25.0	24.33	1.17	0.06	1	1.17
	LTE 4	QPSK20M	Front Face	20300	50	0	24.0	23.46	1.13	0.11	0.908	1.03
	LTE 4	QPSK20M	Front Face	20050	50	0	24.0	23.41	1.15	0.09	0.768	0.88
	LTE 4	QPSK20M	Front Face	20175	50	0	24.0	23.42	1.14	0.12	0.758	0.87
	LTE 4	QPSK20M	Front Face	20300	100	0	24.0	23.43	1.14	0.16	0.809	0.92
	LTE 4	QPSK20M	Rear Face	20300	1	0	25.0	24.52	1.12	-0.16	0.501	0.56
	LTE 4	QPSK20M	Rear Face	20300	50	0	24.0	23.46	1.13	-0.19	0.409	0.46

Note:

1. According to KDB 941225, LTE SAR testing for remaining RB offset configurations and required test channels is not required when the reported SAR of highest power 1RB configuration is less than 0.8 W/kg.
2. According to KDB 941225, LTE SAR testing for remaining RB offset configurations and required test channels is not required when the reported SAR of highest power 50% RB configuration is less than 0.8 W/kg.
3. According to KDB 941225, LTE SAR testing for 100% RB is not required when the maximum power of 100% RB is less than the maximum power of 1RB and 50% RB, and the highest reported SAR for 1RB and 50% RB is less than 0.8 W/kg.
4. According to KDB 941225, LTE SAR testing for 16QAM is not required when the maximum power of 16QAM is less 1/2 dB higher than QPSK, and the highest reported SAR of QPSK is less than 1.45 W/kg.
5. According to KDB 941225, LTE SAR testing for smaller channel bandwidth is not required when the maximum power of smaller channel bandwidth is less 1/2 dB higher than largest channel bandwidth, and the highest reported SAR of largest channel bandwidth is less than 1.45 W/kg.

Plot No.	Band	Mode	Test Position	Ch.	RB#	RB Offset	Max. Tune-up Power (dBm)	Measured Conducted Power (dBm)	Scaling Factor	Power Drift (dB)	Measured SAR-1g (W/kg)	Scaled SAR-1g (W/kg)
	LTE 5	QPSK10M	Front Face	20600	1	0	24.5	24.13	1.09	0.01	0.784	0.85
	LTE 5	QPSK10M	Front Face	20450	1	0	24.5	24.07	1.10	0.04	0.67	0.74
21	LTE 5	QPSK10M	Front Face	20525	1	0	24.5	24.12	1.09	0	0.784	**0.86**
	LTE 5	QPSK10M	Front Face	20600	25	0	23.5	23.12	1.09	0.02	0.644	0.70
	LTE 5	QPSK10M	Front Face	20600	50	0	23.5	23.08	1.10	0.03	0.668	0.74
	LTE 5	QPSK10M	Rear Face	20600	1	0	24.5	24.13	1.09	0.06	0.779	0.85
	LTE 5	QPSK10M	Rear Face	20450	1	0	24.5	24.07	1.10	0.08	0.65	0.72
	LTE 5	QPSK10M	Rear Face	20525	1	0	24.5	24.12	1.09	0.04	0.777	0.85
	LTE 5	QPSK10M	Rear Face	20600	25	0	23.5	23.12	1.09	0.04	0.643	0.70
	LTE 5	QPSK10M	Rear Face	20600	50	0	23.5	23.08	1.10	0.04	0.656	0.72
	LTE 7	QPSK20M	Front Face	21100	1	0	25.0	24.61	1.09	0.07	0.338	0.37
	LTE 7	QPSK20M	Front Face	21100	50	0	24.0	23.57	1.10	-0.09	0.288	0.32
22	LTE 7	QPSK20M	Rear Face	21100	1	0	25.0	24.61	1.09	0.09	0.431	**0.47**
	LTE 7	QPSK20M	Rear Face	21100	50	0	24.0	23.57	1.10	0.01	0.356	0.39
	LTE 17	QPSK10M	Front Face	23790	1	0	24.5	24.09	1.10	0.03	0.524	0.58
	LTE 17	QPSK10M	Front Face	23790	25	0	23.5	23.08	1.10	-0.02	0.424	0.47
23	LTE 17	QPSK10M	Rear Face	23790	1	0	24.5	24.09	1.10	0.04	0.594	**0.65**
	LTE 17	QPSK10M	Rear Face	23790	25	0	23.5	23.08	1.10	0.03	0.483	0.53

Note:

1. According to KDB 941225, LTE SAR testing for remaining RB offset configurations and required test channels is not required when the reported SAR of highest power 1RB configuration is less than 0.8 W/kg.
2. According to KDB 941225, LTE SAR testing for remaining RB offset configurations and required test channels is not required when the reported SAR of highest power 50% RB configuration is less than 0.8 W/kg.
3. According to KDB 941225, LTE SAR testing for 100% RB is not required when the maximum power of 100% RB is less than the maximum power of 1RB and 50% RB, and the highest reported SAR for 1RB and 50% RB is less than 0.8 W/kg.
4. According to KDB 941225, LTE SAR testing for 16QAM is not required when the maximum power of 16QAM is less 1/2 dB higher than QPSK, and the highest reported SAR of QPSK is less than 1.45 W/kg.
5. According to KDB 941225, LTE SAR testing for smaller channel bandwidth is not required when the maximum power of smaller channel bandwidth is less 1/2 dB higher than largest channel bandwidth, and the highest reported SAR of largest channel bandwidth is less than 1.45 W/kg.

Plot No.	Band	Test Position	Ch.	Max. Tune-up Power (dBm)	Measured Conducted Power (dBm)	Scaling Factor	Power Drift (dB)	Measured SAR-1g (W/kg)	Scaled SAR-1g (W/kg)
24	802.11b	Front Face	1	19.0	18.63	1.09	-0.09	0.034	**0.04**
	802.11b	Rear Face	1	19.0	18.63	1.09	0.04	0.030	0.03
	802.11a	Front Face	48	15.5	15.19	1.07	0.18	0.02	0.02
25	802.11a	Rear Face	48	15.5	15.19	1.07	0.16	0.032	**0.03**
	802.11a	Front Face	64	15.5	15.30	1.05	-0.15	0.017	0.02
26	802.11a	Rear Face	64	15.5	15.30	1.05	0.1	0.024	**0.03**
27	802.11a	Front Face	100	15.5	15.08	1.10	0.08	0.036	**0.04**
	802.11a	Rear Face	100	15.5	15.08	1.10	0.15	0.025	0.03
28	802.11a	Front Face	157	15.5	15.34	1.04	-0.05	0.107	**0.11**
	802.11a	Rear Face	157	15.5	15.34	1.04	-0.08	0.099	0.10

Note:

1. According to KDB 248227, when the extrapolated maximum peak SAR for the maximum output power channel is <= 1.6 W/kg and the 1g averaged SAR is <= 0.8 W/kg, WLAN SAR testing for other channels is not required.
2. SAR testing for 802.11g/n is not required when its maximum power is less than 1/4 dB higher than 802.11b.
3. SAR testing for 802.11n is not required when its maximum power is less than 1/4 dB higher than 802.11a.

4.7.3 SAR Results for Hotspot (Separation Distance is 1.0 cm Gap)

Plot No.	Band	Mode	Test Position	Ch.	Max. Tune-up Power (dBm)	Measured Conducted Power (dBm)	Scaling Factor	Power Drift (dB)	Measured SAR-1g (W/kg)	Scaled SAR-1g (W/kg)
15	GSM850	GPRS10	Front Face	251	30.0	29.83	1.04	-0.03	0.517	**0.54**
	GSM850	GPRS10	Rear Face	251	30.0	29.83	1.04	0.12	0.517	0.54
	GSM850	GPRS10	Left Side	251	30.0	29.83	1.04	0.07	0.435	0.45
	GSM850	GPRS10	Right Side	251	30.0	29.83	1.04	0.07	0.442	0.46
	GSM850	GPRS10	Bottom Side	251	30.0	29.83	1.04	0.04	0.114	0.12
16	GSM1900	GPRS10	Front Face	810	27.5	27.50	1.00	0.09	0.308	**0.31**
	GSM1900	GPRS10	Rear Face	810	27.5	27.50	1.00	-0.1	0.261	0.26
	GSM1900	GPRS10	Left Side	810	27.5	27.50	1.00	-0.04	0.15	0.15
	GSM1900	GPRS10	Right Side	810	27.5	27.50	1.00	-0.13	0.051	0.05
	GSM1900	GPRS10	Bottom Side	810	27.5	27.50	1.00	0.14	0.190	0.19
17	WCDMA II	RMC12.2K	Front Face	9400	23.5	23.14	1.09	0.01	0.556	**0.60**
	WCDMA II	RMC12.2K	Rear Face	9400	23.5	23.14	1.09	-0.18	0.43	0.47
	WCDMA II	RMC12.2K	Left Side	9400	23.5	23.14	1.09	-0.14	0.218	0.24
	WCDMA II	RMC12.2K	Right Side	9400	23.5	23.14	1.09	0.11	0.094	0.10
	WCDMA II	RMC12.2K	Bottom Side	9400	23.5	23.14	1.09	0.18	0.292	0.32
18	WCDMA V	RMC12.2K	Front Face	4182	23.0	22.74	1.06	0.01	0.57	**0.61**
	WCDMA V	RMC12.2K	Rear Face	4182	23.0	22.74	1.06	0.08	0.518	0.55
	WCDMA V	RMC12.2K	Left Side	4182	23.0	22.74	1.06	0.09	0.413	0.44
	WCDMA V	RMC12.2K	Right Side	4182	23.0	22.74	1.06	0.08	0.315	0.33
	WCDMA V	RMC12.2K	Bottom Side	4182	23.0	22.74	1.06	0.11	0.14	0.15

Note:

1. SAR is performed on the highest power channel. When the reported SAR value of highest power channel is <= 0.8 W/kg, SAR testing for optional channel is not required.

Plot No.	Band	Mode	Test Position	Ch.	RB#	RB Offset	Max. Tune-up Power (dBm)	Measured Conducted Power (dBm)	Scaling Factor	Power Drift (dB)	Measured SAR-1g (W/kg)	Scaled SAR-1g (W/kg)
	LTE 2	QPSK20M	Front Face	19100	1	0	24.5	24.22	1.07	0.02	0.668	0.71
	LTE 2	QPSK20M	Front Face	19100	50	0	23.5	23.20	1.07	0.09	0.539	0.58
19	LTE 2	QPSK20M	Rear Face	19100	1	0	24.5	24.22	1.07	-0.17	0.685	**0.73**
	LTE 2	QPSK20M	Rear Face	19100	50	0	23.5	23.20	1.07	-0.16	0.548	0.59
	LTE 2	QPSK20M	Left Side	19100	1	0	24.5	24.22	1.07	0.11	0.297	0.32
	LTE 2	QPSK20M	Left Side	19100	50	0	23.5	23.20	1.07	-0.12	0.247	0.26
	LTE 2	QPSK20M	Right Side	19100	1	0	24.5	24.22	1.07	-0.07	0.161	0.17
	LTE 2	QPSK20M	Right Side	19100	50	0	23.5	23.20	1.07	-0.16	0.12	0.13
	LTE 2	QPSK20M	Bottom Side	19100	1	0	24.5	24.22	1.07	0.08	0.436	0.47
	LTE 2	QPSK20M	Bottom Side	19100	50	0	23.5	23.20	1.07	0.09	0.354	0.38

Note:

1. According to KDB 941225, LTE SAR testing for remaining RB offset configurations and required test channels is not required when the reported SAR of highest power 1RB configuration is less than 0.8 W/kg.
2. According to KDB 941225, LTE SAR testing for remaining RB offset configurations and required test channels is not required when the reported SAR of highest power 50% RB configuration is less than 0.8 W/kg.
3. According to KDB 941225, LTE SAR testing for 100% RB is not required when the maximum power of 100% RB is less than the maximum power of 1RB and 50% RB, and the highest reported SAR for 1RB and 50% RB is less than 0.8 W/kg.
4. According to KDB 941225, LTE SAR testing for 16QAM is not required when the maximum power of 16QAM is less 1/2 dB higher than QPSK, and the highest reported SAR of QPSK is less than 1.45 W/kg.
5. According to KDB 941225, LTE SAR testing for smaller channel bandwidth is not required when the maximum power of smaller channel bandwidth is less 1/2 dB higher than largest channel bandwidth, and the highest reported SAR of largest channel bandwidth is less than 1.45 W/kg.

Plot No.	Band	Mode	Test Position	Ch.	RB#	RB Offset	Max. Tune-up Power (dBm)	Measured Conducted Power (dBm)	Scaling Factor	Power Drift (dB)	Measured SAR-1g (W/kg)	Scaled SAR-1g (W/kg)
20	LTE 4	QPSK20M	Front Face	20300	1	0	25.0	24.52	1.12	0.1	1.13	**1.26**
	LTE 4	QPSK20M	Front Face	20300	1	0	25.0	24.52	1.12	0.1	1.09	1.22
	LTE 4	QPSK20M	Front Face	20050	1	0	25.0	24.41	1.15	0.14	0.976	1.12
	LTE 4	QPSK20M	Front Face	20175	1	0	25.0	24.33	1.17	0.06	1	1.17
	LTE 4	QPSK20M	Front Face	20300	50	0	24.0	23.46	1.13	0.11	0.908	1.03
	LTE 4	QPSK20M	Front Face	20050	50	0	24.0	23.41	1.15	0.09	0.768	0.88
	LTE 4	QPSK20M	Front Face	20175	50	0	24.0	23.42	1.14	0.12	0.758	0.87
	LTE 4	QPSK20M	Front Face	20300	100	0	24.0	23.43	1.14	0.16	0.809	0.92
	LTE 4	QPSK20M	Rear Face	20300	1	0	25.0	24.52	1.12	-0.16	0.501	0.56
	LTE 4	QPSK20M	Rear Face	20300	50	0	24.0	23.46	1.13	-0.19	0.409	0.46
	LTE 4	QPSK20M	Left Side	20300	1	0	25.0	24.52	1.12	0.02	0.296	0.33
	LTE 4	QPSK20M	Left Side	20300	50	0	24.0	23.46	1.13	-0.02	0.241	0.27
	LTE 4	QPSK20M	Right Side	20300	1	0	25.0	24.52	1.12	0.17	0.122	0.14
	LTE 4	QPSK20M	Right Side	20300	50	0	24.0	23.46	1.13	0.1	0.099	0.11
	LTE 4	QPSK20M	Bottom Side	20300	1	0	25.0	24.52	1.12	0.01	0.246	0.27
	LTE 4	QPSK20M	Bottom Side	20300	50	0	24.0	23.46	1.13	0.11	0.199	0.23
	LTE 5	QPSK10M	Front Face	20600	1	0	24.5	24.13	1.09	0.01	0.784	0.85
	LTE 5	QPSK10M	Front Face	20450	1	0	24.5	24.07	1.10	0.04	0.67	0.74
21	LTE 5	QPSK10M	Front Face	20525	1	0	24.5	24.12	1.09	0	0.784	**0.86**
	LTE 5	QPSK10M	Front Face	20600	25	0	23.5	23.12	1.09	0.02	0.644	0.70
	LTE 5	QPSK10M	Front Face	20600	50	0	23.5	23.08	1.10	0.03	0.668	0.74
	LTE 5	QPSK10M	Rear Face	20600	1	0	24.5	24.13	1.09	0.06	0.779	0.85
	LTE 5	QPSK10M	Rear Face	20450	1	0	24.5	24.07	1.10	0.08	0.65	0.72
	LTE 5	QPSK10M	Rear Face	20525	1	0	24.5	24.12	1.09	0.04	0.777	0.85
	LTE 5	QPSK10M	Rear Face	20600	25	0	23.5	23.12	1.09	0.04	0.643	0.70
	LTE 5	QPSK10M	Rear Face	20600	50	0	23.5	23.08	1.10	0.04	0.656	0.72
	LTE 5	QPSK10M	Left Side	20600	1	0	24.5	24.13	1.09	0.02	0.575	0.63
	LTE 5	QPSK10M	Left Side	20600	25	0	23.5	23.12	1.09	0.08	0.471	0.51
	LTE 5	QPSK10M	Right Side	20600	1	0	24.5	24.13	1.09	0.11	0.609	0.66
	LTE 5	QPSK10M	Right Side	20600	25	0	23.5	23.12	1.09	0.11	0.499	0.54
	LTE 5	QPSK10M	Bottom Side	20600	1	0	24.5	24.13	1.09	0	0.118	0.13
	LTE 5	QPSK10M	Bottom Side	20600	25	0	23.5	23.12	1.09	0.03	0.077	0.08

Note:

1. According to KDB 941225, LTE SAR testing for remaining RB offset configurations and required test channels is not required when the reported SAR of highest power 1RB configuration is less than 0.8 W/kg.
2. According to KDB 941225, LTE SAR testing for remaining RB offset configurations and required test channels is not required when the reported SAR of highest power 50% RB configuration is less than 0.8 W/kg.
3. According to KDB 941225, LTE SAR testing for 100% RB is not required when the maximum power of 100% RB is less than the maximum power of 1RB and 50% RB, and the highest reported SAR for 1RB and 50% RB is less than 0.8 W/kg.
4. According to KDB 941225, LTE SAR testing for 16QAM is not required when the maximum power of 16QAM is less 1/2 dB higher than QPSK, and the highest reported SAR of QPSK is less than 1.45 W/kg.
5. According to KDB 941225, LTE SAR testing for smaller channel bandwidth is not required when the maximum power of smaller channel bandwidth is less 1/2 dB higher than largest channel bandwidth, and the highest reported SAR of largest channel bandwidth is less than 1.45 W/kg.

Plot No.	Band	Mode	Test Position	Ch.	RB#	RB Offset	Max. Tune-up Power (dBm)	Measured Conducted Power (dBm)	Scaling Factor	Power Drift (dB)	Measured SAR-1g (W/kg)	Scaled SAR-1g (W/kg)
	LTE 7	QPSK20M	Front Face	21100	1	0	25.0	24.61	1.09	0.07	0.338	0.37
	LTE 7	QPSK20M	Front Face	21100	50	0	24.0	23.57	1.10	-0.09	0.288	0.32
	LTE 7	QPSK20M	Rear Face	21100	1	0	25.0	24.61	1.09	0.09	0.431	0.47
	LTE 7	QPSK20M	Rear Face	21100	50	0	24.0	23.57	1.10	0.01	0.356	0.39
	LTE 7	QPSK20M	Left Side	21100	1	0	25.0	24.61	1.09	-0.04	0.03	0.03
	LTE 7	QPSK20M	Left Side	21100	50	0	24.0	23.57	1.10	-0.09	0.023	0.03
	LTE 7	QPSK20M	Right Side	21100	1	0	25.0	24.61	1.09	0.07	0.086	0.09
	LTE 7	QPSK20M	Right Side	21100	50	0	24.0	23.57	1.10	0.04	0.071	0.08
	LTE 7	QPSK20M	Bottom Side	21100	1	0	25.0	24.61	1.09	0.17	0.855	0.94
	LTE 7	QPSK20M	Bottom Side	20850	1	0	25.0	24.52	1.12	0.01	1.11	1.24
29	LTE 7	QPSK20M	Bottom Side	21350	1	0	25.0	24.53	1.11	0.03	1.16	**1.29**
	LTE 7	QPSK20M	Bottom Side	21350	1	0	25.0	24.53	1.11	0.01	1.12	1.25
	LTE 7	QPSK20M	Bottom Side	21100	50	0	24.0	23.57	1.10	0.17	0.691	0.76
	LTE 7	QPSK20M	Bottom Side	21100	100	0	24.0	23.54	1.11	0.04	0.921	1.02
	LTE 17	QPSK10M	Front Face	23790	1	0	24.5	24.09	1.10	0.03	0.524	0.58
	LTE 17	QPSK10M	Front Face	23790	25	0	23.5	23.08	1.10	-0.02	0.424	0.47
23	LTE 17	QPSK10M	Rear Face	23790	1	0	24.5	24.09	1.10	0.04	0.594	**0.65**
	LTE 17	QPSK10M	Rear Face	23790	25	0	23.5	23.08	1.10	0.03	0.483	0.53
	LTE 17	QPSK10M	Left Side	23790	1	0	24.5	24.09	1.10	0.03	0.323	0.35
	LTE 17	QPSK10M	Left Side	23790	25	0	23.5	23.08	1.10	0.08	0.262	0.29
	LTE 17	QPSK10M	Right Side	23790	1	0	24.5	24.09	1.10	0.01	0.352	0.39
	LTE 17	QPSK10M	Right Side	23790	25	0	23.5	23.08	1.10	0	0.293	0.32
	LTE 17	QPSK10M	Bottom Side	23790	1	0	24.5	24.09	1.10	0.02	0.071	0.08
	LTE 17	QPSK10M	Bottom Side	23790	25	0	23.5	23.08	1.10	-0.03	0.058	0.06

Note:

1. According to KDB 941225, LTE SAR testing for remaining RB offset configurations and required test channels is not required when the reported SAR of highest power 1RB configuration is less than 0.8 W/kg.
2. According to KDB 941225, LTE SAR testing for remaining RB offset configurations and required test channels is not required when the reported SAR of highest power 50% RB configuration is less than 0.8 W/kg.
3. According to KDB 941225, LTE SAR testing for 100% RB is not required when the maximum power of 100% RB is less than the maximum power of 1RB and 50% RB, and the highest reported SAR for 1RB and 50% RB is less than 0.8 W/kg.
4. According to KDB 941225, LTE SAR testing for 16QAM is not required when the maximum power of 16QAM is less 1/2 dB higher than QPSK, and the highest reported SAR of QPSK is less than 1.45 W/kg.
5. According to KDB 941225, LTE SAR testing for smaller channel bandwidth is not required when the maximum power of smaller channel bandwidth is less 1/2 dB higher than largest channel bandwidth, and the highest reported SAR of largest channel bandwidth is less than 1.45 W/kg.

Plot No.	Band	Test Position	Ch.	Max. Tune-up Power (dBm)	Measured Conducted Power (dBm)	Scaling Factor	Power Drift (dB)	Measured SAR-1g (W/kg)	Scaled SAR-1g (W/kg)
24	802.11b	Front Face	1	19.0	18.63	1.09	-0.09	0.034	**0.04**
	802.11b	Rear Face	1	19.0	18.63	1.09	0.04	0.030	0.03
	802.11b	Right Side	1	19.0	18.63	1.09	0.02	0.021	0.02
	802.11b	Top Side	1	19.0	18.63	1.09	-0.1	0.026	0.03

Note:

1. According to KDB 248227, when the extrapolated maximum peak SAR for the maximum output power channel is <= 1.6 W/kg and the 1g averaged SAR is <= 0.8 W/kg, WLAN SAR testing for other channels is not required.
2. SAR testing for 802.11g/n is not required when its maximum power is less than 1/4 dB higher than 802.11b.
3. WLAN 5G does not support wireless hotspot mode

4.7.4 SAR Measurement Variability

According to KDB 865664 D01, SAR measurement variability was assessed for each frequency band, which is determined by the SAR probe calibration point and tissue-equivalent medium used for the device measurements. When both head and body tissue-equivalent media are required for SAR measurements in a frequency band, the variability measurement procedures should be applied to the tissue medium with the highest measured SAR, using the highest measured SAR configuration for that tissue-equivalent medium. Alternatively, if the highest measured SAR for both head and body tissue-equivalent media are ≤ 1.45 W/kg and the ratio of these highest SAR values, i.e., largest divided by smallest value, is ≤ 1.10, the highest SAR configuration for either head or body tissue-equivalent medium may be used to perform the repeated measurement. These additional measurements are repeated after the completion of all measurements requiring the same head or body tissue-equivalent medium in a frequency band. The test device should be returned to ambient conditions (normal room temperature) with the battery fully charged before it is re-mounted on the device holder for the repeated measurement(s) to minimize any unexpected variations in the repeated results.

SAR repeated measurement procedure:

1. When the highest measured SAR is < 0.80 W/kg, repeated measurement is not required.
2. When the highest measured SAR is >= 0.80 W/kg, repeat that measurement once.
3. If the ratio of largest to smallest SAR for the original and first repeated measurements is > 1.20, or when the original or repeated measurement is >= 1.45 W/kg, perform a second repeated measurement.
4. If the ratio of largest to smallest SAR for the original, first and second repeated measurements is > 1.20, and the original, first or second repeated measurement is >= 1.5 W/kg, perform a third repeated measurement.

Band	Mode	Test Position	Ch.	Original Measured SAR-1g (W/kg)	1st Repeated SAR-1g (W/kg)	L/S Ratio	2nd Repeated SAR-1g (W/kg)	L/S Ratio	3rd Repeated SAR-1g (W/kg)	L/S Ratio
LTE 2	QPSK20M	Left Cheek	18700	0.954	0.945	1.01	N/A	N/A	N/A	N/A
LTE 4	QPSK20M	Left Cheek	20175	1.12	1.1	1.02	N/A	N/A	N/A	N/A
LTE 5	QPSK10M	Left Cheek	20600	0.818	0.806	1.01	N/A	N/A	N/A	N/A
LTE 4	QPSK20M	Front Face	20300	1.13	1.09	1.04	N/A	N/A	N/A	N/A
LTE 7	QPSK20M	Bottom Side	21350	1.16	1.12	1.04	N/A	N/A	N/A	N/A

4.7.5 Simultaneous Multi-band Transmission Evaluation

<Estimated SAR Calculation>

According to KDB 447498 D01, when standalone SAR test exclusion applies to an antenna that transmits simultaneously with other antennas, the standalone SAR was estimated according to following formula to result in substantially conservative SAR values of <= 0.4 W/kg to determine simultaneous transmission SAR test exclusion.

$$\text{Estimated SAR} = \frac{\text{Max. Tune up Power}_{(\text{mW})}}{\text{Min. Test Separation Distance}_{(\text{mm})}} \times \frac{\sqrt{f_{(\text{GHz})}}}{7.5}$$

If the minimum test separation distance is < 5 mm, a distance of 5 mm is used for estimated SAR calculation. When the test separation distance is > 50 mm, the 0.4 W/kg is used for SAR-1g.

Mode / Band	Frequency (GHz)	Max. Tune-up Power (dBm)	Test Position	Separation Distance (mm)	Estimated SAR (W/kg)
BT (DSS)	2.48	8.5	Body-worn	10	0.15

Note:

1. The separation distance is determined from the outer housing of the EUT to the user.
2. When standalone SAR testing is not required, an estimated SAR can be applied to determine simultaneous transmission SAR test exclusion.

<SAR Summation Analysis>

Simultaneous transmission SAR test exclusion is determined for each operating configuration and exposure condition according to the reported standalone SAR of each applicable simultaneous transmitting antenna. When the sum of SAR_{1g} of all simultaneously transmitting antennas in an operating mode and exposure condition combination is within the SAR limit (SAR_{1g} 1.6 W/kg), the simultaneous transmission SAR is not required. When the sum of SAR_{1g} is greater than the SAR limit (SAR_{1g} 1.6 W/kg), SAR test exclusion is determined by the SPLSR.

No.	Conditions (SAR1 + SAR2)	Exposure Condition	Test Position	Max. SAR1	Max. SAR2	SAR Summation	SPLSR Analysis
1	GSM850 + WLAN (DTS)	Head	Right Cheek	0.46	0.26	0.72	Σ SAR < 1.6, Not required
			Right Tilted	0.21	0.22	0.43	Σ SAR < 1.6, Not required
			Left Cheek	0.51	0.34	0.85	Σ SAR < 1.6, Not required
			Left Tilted	0.23	0.29	0.52	Σ SAR < 1.6, Not required
		Body-Worn	Front Face	0.54	0.04	0.58	Σ SAR < 1.6, Not required
			Rear Face	0.54	0.03	0.57	Σ SAR < 1.6, Not required
		Hotspot	Front Face	0.54	0.04	0.58	Σ SAR < 1.6, Not required
			Rear Face	0.54	0.03	0.57	Σ SAR < 1.6, Not required
			Left Side	0.45	0.00	0.45	Σ SAR < 1.6, Not required
			Right Side	0.46	0.02	0.48	Σ SAR < 1.6, Not required
			Top Side	0.00	0.03	0.03	Σ SAR < 1.6, Not required
			Bottom Side	0.12	0.00	0.12	Σ SAR < 1.6, Not required
2	GSM850 + WLAN (NII)	Head	Right Cheek	0.46	0.38	0.84	Σ SAR < 1.6, Not required
			Right Tilted	0.21	0.37	0.58	Σ SAR < 1.6, Not required
			Left Cheek	0.51	0.44	0.95	Σ SAR < 1.6, Not required
			Left Tilted	0.23	0.35	0.58	Σ SAR < 1.6, Not required
		Body-Worn	Front Face	0.54	0.11	0.65	Σ SAR < 1.6, Not required
			Rear Face	0.54	0.10	0.64	Σ SAR < 1.6, Not required
3	GSM850 + BT (DSS)	Body-Worn	Front Face	0.54	0.15	0.69	Σ SAR < 1.6, Not required
			Rear Face	0.54	0.15	0.69	Σ SAR < 1.6, Not required

No.	Conditions (SAR1 + SAR2)	Exposure Condition	Test Position	Max. SAR1	Max. SAR2	SAR Summation	SPLSR Analysis
4	GSM1900 + WLAN (DTS)	Head	Right Cheek	0.22	0.26	0.48	Σ SAR < 1.6, Not required
			Right Tilted	0.12	0.22	0.34	Σ SAR < 1.6, Not required
			Left Cheek	0.34	0.34	0.68	Σ SAR < 1.6, Not required
			Left Tilted	0.12	0.29	0.41	Σ SAR < 1.6, Not required
		Body-Worn	Front Face	0.31	0.04	0.35	Σ SAR < 1.6, Not required
			Rear Face	0.26	0.03	0.29	Σ SAR < 1.6, Not required
		Hotspot	Front Face	0.31	0.04	0.35	Σ SAR < 1.6, Not required
			Rear Face	0.26	0.03	0.29	Σ SAR < 1.6, Not required
			Left Side	0.15	0.00	0.15	Σ SAR < 1.6, Not required
			Right Side	0.05	0.02	0.07	Σ SAR < 1.6, Not required
			Top Side	0.00	0.03	0.03	Σ SAR < 1.6, Not required
			Bottom Side	0.19	0.00	0.19	Σ SAR < 1.6, Not required
5	GSM1900 + WLAN (NII)	Head	Right Cheek	0.22	0.38	0.60	Σ SAR < 1.6, Not required
			Right Tilted	0.12	0.37	0.49	Σ SAR < 1.6, Not required
			Left Cheek	0.34	0.44	0.78	Σ SAR < 1.6, Not required
			Left Tilted	0.12	0.35	0.47	Σ SAR < 1.6, Not required
		Body-Worn	Front Face	0.31	0.11	0.42	Σ SAR < 1.6, Not required
			Rear Face	0.26	0.10	0.36	Σ SAR < 1.6, Not required
6	GSM1900 + BT (DSS)	Body-Worn	Front Face	0.31	0.15	0.46	Σ SAR < 1.6, Not required
			Rear Face	0.26	0.15	0.41	Σ SAR < 1.6, Not required

No.	Conditions (SAR1 + SAR2)	Exposure Condition	Test Position	Max. SAR1	Max. SAR2	SAR Summation	SPLSR Analysis
7	WCDMA II + WLAN (DTS)	Head	Right Cheek	0.47	0.26	0.73	Σ SAR < 1.6, Not required
			Right Tilted	0.25	0.22	0.47	Σ SAR < 1.6, Not required
			Left Cheek	0.78	0.34	1.12	Σ SAR < 1.6, Not required
			Left Tilted	0.22	0.29	0.51	Σ SAR < 1.6, Not required
		Body-Worn	Front Face	0.60	0.04	0.64	Σ SAR < 1.6, Not required
			Rear Face	0.47	0.03	0.50	Σ SAR < 1.6, Not required
		Hotspot	Front Face	0.60	0.04	0.64	Σ SAR < 1.6, Not required
			Rear Face	0.47	0.03	0.50	Σ SAR < 1.6, Not required
			Left Side	0.24	0.00	0.24	Σ SAR < 1.6, Not required
			Right Side	0.10	0.02	0.12	Σ SAR < 1.6, Not required
			Top Side	0.00	0.03	0.03	Σ SAR < 1.6, Not required
			Bottom Side	0.32	0.00	0.32	Σ SAR < 1.6, Not required
8	WCDMA II + WLAN (NII)	Head	Right Cheek	0.47	0.38	0.85	Σ SAR < 1.6, Not required
			Right Tilted	0.25	0.37	0.62	Σ SAR < 1.6, Not required
			Left Cheek	0.78	0.44	1.22	Σ SAR < 1.6, Not required
			Left Tilted	0.22	0.35	0.57	Σ SAR < 1.6, Not required
		Body-Worn	Front Face	0.60	0.11	0.71	Σ SAR < 1.6, Not required
			Rear Face	0.47	0.10	0.57	Σ SAR < 1.6, Not required
9	WCDMA II + BT (DSS)	Body-Worn	Front Face	0.60	0.15	0.75	Σ SAR < 1.6, Not required
			Rear Face	0.47	0.15	0.62	Σ SAR < 1.6, Not required

No.	Conditions (SAR1 + SAR2)	Exposure Condition	Test Position	Max. SAR1	Max. SAR2	SAR Summation	SPLSR Analysis
10	WCDMA V + WLAN (DTS)	Head	Right Cheek	0.48	0.26	0.74	Σ SAR < 1.6, Not required
			Right Tilted	0.26	0.22	0.48	Σ SAR < 1.6, Not required
			Left Cheek	0.55	0.34	0.89	Σ SAR < 1.6, Not required
			Left Tilted	0.27	0.29	0.56	Σ SAR < 1.6, Not required
		Body-Worn	Front Face	0.61	0.04	0.65	Σ SAR < 1.6, Not required
			Rear Face	0.55	0.03	0.58	Σ SAR < 1.6, Not required
		Hotspot	Front Face	0.61	0.04	0.65	Σ SAR < 1.6, Not required
			Rear Face	0.55	0.03	0.58	Σ SAR < 1.6, Not required
			Left Side	0.44	0.00	0.44	Σ SAR < 1.6, Not required
			Right Side	0.33	0.02	0.35	Σ SAR < 1.6, Not required
			Top Side	0.00	0.03	0.03	Σ SAR < 1.6, Not required
			Bottom Side	0.15	0.00	0.15	Σ SAR < 1.6, Not required
11	WCDMA V + WLAN (NII)	Head	Right Cheek	0.48	0.38	0.86	Σ SAR < 1.6, Not required
			Right Tilted	0.26	0.37	0.63	Σ SAR < 1.6, Not required
			Left Cheek	0.55	0.44	0.99	Σ SAR < 1.6, Not required
			Left Tilted	0.27	0.35	0.62	Σ SAR < 1.6, Not required
		Body-Worn	Front Face	0.61	0.11	0.72	Σ SAR < 1.6, Not required
			Rear Face	0.55	0.10	0.65	Σ SAR < 1.6, Not required
12	WCDMA V + BT (DSS)	Body-Worn	Front Face	0.61	0.15	0.76	Σ SAR < 1.6, Not required
			Rear Face	0.55	0.15	0.70	Σ SAR < 1.6, Not required

No.	Conditions (SAR1 + SAR2)	Exposure Condition	Test Position	Max. SAR1	Max. SAR2	SAR Summation	SPLSR Analysis
13	LTE 2 + WLAN (DTS)	Head	Right Cheek	0.64	0.26	0.90	Σ SAR < 1.6, Not required
			Right Tilted	0.37	0.22	0.59	Σ SAR < 1.6, Not required
			Left Cheek	1.06	0.34	1.40	Σ SAR < 1.6, Not required
			Left Tilted	0.29	0.29	0.58	Σ SAR < 1.6, Not required
		Body-Worn	Front Face	0.71	0.04	0.75	Σ SAR < 1.6, Not required
			Rear Face	0.73	0.03	0.76	Σ SAR < 1.6, Not required
		Hotspot	Front Face	0.71	0.04	0.75	Σ SAR < 1.6, Not required
			Rear Face	0.73	0.03	0.76	Σ SAR < 1.6, Not required
			Left Side	0.32	0.00	0.32	Σ SAR < 1.6, Not required
			Right Side	0.17	0.02	0.19	Σ SAR < 1.6, Not required
			Top Side	0.00	0.03	0.03	Σ SAR < 1.6, Not required
			Bottom Side	0.47	0.00	0.47	Σ SAR < 1.6, Not required
14	LTE 2 + WLAN (NII)	Head	Right Cheek	0.64	0.38	1.02	Σ SAR < 1.6, Not required
			Right Tilted	0.37	0.37	0.74	Σ SAR < 1.6, Not required
			Left Cheek	1.06	0.44	1.50	Σ SAR < 1.6, Not required
			Left Tilted	0.29	0.35	0.64	Σ SAR < 1.6, Not required
		Body-Worn	Front Face	0.71	0.11	0.82	Σ SAR < 1.6, Not required
			Rear Face	0.73	0.10	0.83	Σ SAR < 1.6, Not required
15	LTE 2 + BT (DSS)	Body-Worn	Front Face	0.71	0.15	0.86	Σ SAR < 1.6, Not required
			Rear Face	0.73	0.15	0.88	Σ SAR < 1.6, Not required

No.	Conditions (SAR1 + SAR2)	Exposure Condition	Test Position	Max. SAR1	Max. SAR2	SAR Summation	SPLSR Analysis
16	LTE 4 + WLAN (DTS)	Head	Right Cheek	0.86	0.26	1.12	Σ SAR < 1.6, Not required
			Right Tilted	0.44	0.22	0.66	Σ SAR < 1.6, Not required
			Left Cheek	1.31	0.34	1.65	**Analyzed as below**
			Left Tilted	0.44	0.29	0.73	Σ SAR < 1.6, Not required
		Body-Worn	Front Face	1.26	0.04	1.30	Σ SAR < 1.6, Not required
			Rear Face	0.56	0.03	0.59	Σ SAR < 1.6, Not required
		Hotspot	Front Face	1.26	0.04	1.30	Σ SAR < 1.6, Not required
			Rear Face	0.56	0.03	0.59	Σ SAR < 1.6, Not required
			Left Side	0.33	0.00	0.33	Σ SAR < 1.6, Not required
			Right Side	0.14	0.02	0.16	Σ SAR < 1.6, Not required
			Top Side	0.00	0.03	0.03	Σ SAR < 1.6, Not required
			Bottom Side	0.27	0.00	0.27	Σ SAR < 1.6, Not required
17	LTE 4 + WLAN (NII)	Head	Right Cheek	0.86	0.38	1.24	Σ SAR < 1.6, Not required
			Right Tilted	0.44	0.37	0.81	Σ SAR < 1.6, Not required
			Left Cheek	1.31	0.44	1.75	**Analyzed as below**
			Left Tilted	0.44	0.35	0.79	Σ SAR < 1.6, Not required
		Body-Worn	Front Face	1.26	0.11	1.37	Σ SAR < 1.6, Not required
			Rear Face	0.56	0.10	0.66	Σ SAR < 1.6, Not required
18	LTE 4 + BT (DSS)	Body-Worn	Front Face	1.26	0.15	1.41	Σ SAR < 1.6, Not required
			Rear Face	0.56	0.15	0.71	Σ SAR < 1.6, Not required

No.	Conditions (SAR1 + SAR2)	Exposure Condition	Test Position	Max. SAR1	Max. SAR2	SAR Summation	SPLSR Analysis
19	LTE 5 + WLAN (DTS)	Head	Right Cheek	0.76	0.26	1.02	Σ SAR < 1.6, Not required
			Right Tilted	0.36	0.22	0.58	Σ SAR < 1.6, Not required
			Left Cheek	0.89	0.34	1.23	Σ SAR < 1.6, Not required
			Left Tilted	0.41	0.29	0.70	Σ SAR < 1.6, Not required
		Body-Worn	Front Face	0.86	0.04	0.90	Σ SAR < 1.6, Not required
			Rear Face	0.85	0.03	0.88	Σ SAR < 1.6, Not required
		Hotspot	Front Face	0.86	0.04	0.90	Σ SAR < 1.6, Not required
			Rear Face	0.85	0.03	0.88	Σ SAR < 1.6, Not required
			Left Side	0.63	0.00	0.63	Σ SAR < 1.6, Not required
			Right Side	0.66	0.02	0.68	Σ SAR < 1.6, Not required
			Top Side	0.00	0.03	0.03	Σ SAR < 1.6, Not required
			Bottom Side	0.13	0.00	0.13	Σ SAR < 1.6, Not required
20	LTE 5 + WLAN (NII)	Head	Right Cheek	0.76	0.38	1.14	Σ SAR < 1.6, Not required
			Right Tilted	0.36	0.37	0.73	Σ SAR < 1.6, Not required
			Left Cheek	0.89	0.44	1.33	Σ SAR < 1.6, Not required
			Left Tilted	0.41	0.35	0.76	Σ SAR < 1.6, Not required
		Body-Worn	Front Face	0.86	0.11	0.97	Σ SAR < 1.6, Not required
			Rear Face	0.85	0.10	0.95	Σ SAR < 1.6, Not required
21	LTE 5 + BT (DSS)	Body-Worn	Front Face	0.86	0.15	1.01	Σ SAR < 1.6, Not required
			Rear Face	0.85	0.15	1.00	Σ SAR < 1.6, Not required

No.	Conditions (SAR1 + SAR2)	Exposure Condition	Test Position	Max. SAR1	Max. SAR2	SAR Summation	SPLSR Analysis
22	LTE 7 + WLAN (DTS)	Head	Right Cheek	0.15	0.26	0.41	Σ SAR < 1.6, Not required
			Right Tilted	0.04	0.22	0.26	Σ SAR < 1.6, Not required
			Left Cheek	0.12	0.34	0.46	Σ SAR < 1.6, Not required
			Left Tilted	0.04	0.29	0.33	Σ SAR < 1.6, Not required
		Body-Worn	Front Face	0.37	0.04	0.41	Σ SAR < 1.6, Not required
			Rear Face	0.47	0.03	0.50	Σ SAR < 1.6, Not required
		Hotspot	Front Face	0.37	0.04	0.41	Σ SAR < 1.6, Not required
			Rear Face	0.47	0.03	0.50	Σ SAR < 1.6, Not required
			Left Side	0.03	0.00	0.03	Σ SAR < 1.6, Not required
			Right Side	0.09	0.02	0.11	Σ SAR < 1.6, Not required
			Top Side	0.00	0.03	0.03	Σ SAR < 1.6, Not required
			Bottom Side	1.29	0.00	1.29	Σ SAR < 1.6, Not required
23	LTE 7 + WLAN (NII)	Head	Right Cheek	0.15	0.38	0.53	Σ SAR < 1.6, Not required
			Right Tilted	0.04	0.37	0.41	Σ SAR < 1.6, Not required
			Left Cheek	0.12	0.44	0.56	Σ SAR < 1.6, Not required
			Left Tilted	0.04	0.35	0.39	Σ SAR < 1.6, Not required
		Body-Worn	Front Face	0.37	0.11	0.48	Σ SAR < 1.6, Not required
			Rear Face	0.47	0.10	0.57	Σ SAR < 1.6, Not required
24	LTE 7 + BT (DSS)	Body-Worn	Front Face	0.37	0.15	0.52	Σ SAR < 1.6, Not required
			Rear Face	0.47	0.15	0.62	Σ SAR < 1.6, Not required

No.	Conditions (SAR1 + SAR2)	Exposure Condition	Test Position	Max. SAR1	Max. SAR2	SAR Summation	SPLSR Analysis
25	LTE 17 + WLAN (DTS)	Head	Right Cheek	0.40	0.26	0.66	Σ SAR < 1.6, Not required
			Right Tilted	0.20	0.22	0.42	Σ SAR < 1.6, Not required
			Left Cheek	0.43	0.34	0.77	Σ SAR < 1.6, Not required
			Left Tilted	0.21	0.29	0.50	Σ SAR < 1.6, Not required
		Body-Worn	Front Face	0.58	0.04	0.62	Σ SAR < 1.6, Not required
			Rear Face	0.65	0.03	0.68	Σ SAR < 1.6, Not required
		Hotspot	Front Face	0.58	0.04	0.62	Σ SAR < 1.6, Not required
			Rear Face	0.65	0.03	0.68	Σ SAR < 1.6, Not required
			Left Side	0.35	0.00	0.35	Σ SAR < 1.6, Not required
			Right Side	0.39	0.02	0.41	Σ SAR < 1.6, Not required
			Top Side	0.00	0.03	0.03	Σ SAR < 1.6, Not required
			Bottom Side	0.08	0.00	0.08	Σ SAR < 1.6, Not required
26	LTE 17 + WLAN (NII)	Head	Right Cheek	0.40	0.38	0.78	Σ SAR < 1.6, Not required
			Right Tilted	0.20	0.37	0.57	Σ SAR < 1.6, Not required
			Left Cheek	0.43	0.44	0.87	Σ SAR < 1.6, Not required
			Left Tilted	0.21	0.35	0.56	Σ SAR < 1.6, Not required
		Body-Worn	Front Face	0.58	0.11	0.69	Σ SAR < 1.6, Not required
			Rear Face	0.65	0.10	0.75	Σ SAR < 1.6, Not required
27	LTE 17 + BT (DSS)	Body-Worn	Front Face	0.58	0.15	0.73	Σ SAR < 1.6, Not required
			Rear Face	0.65	0.15	0.80	Σ SAR < 1.6, Not required

<SAR to Peak Location Separation Ratio Analysis>

The simultaneous transmitting antennas in each operating mode and exposure condition combination are considered one pair at a time to determine the SPLSR. When SAR is measured for both antennas in the pair, the peak location separation distance is computed by the following formula.

$$\text{Peak Location Separation Distance} = \sqrt{(x_1 - x_2)^2 + (y_1 - y_2)^2 + (z_1 - z_2)^2}$$

Where (x_1, y_1, z_1) and (x_2, y_2, z_2) are the coordinates of the extrapolated peak SAR locations in the area or zoom scans.

When standalone test exclusion applies, SAR is estimated; the peak location is assumed to be at the feed-point or geometric center of the antenna. Due to curvatures on the SAM phantom, when SAR is estimated for one of the antennas in an antenna pair, the measured peak SAR location will be translated onto the test device to determine the peak location separation for the antenna pair.

The SPLSR is determined by the following formula.

$$\text{SPLSR} = \frac{(\text{SAR}_1 + \text{SAR}_2)^{1.5}}{R_i}$$

Where SAR_1 and SAR_2 are the highest reported or estimated SAR for each antenna in the pair, and R_i is the separation distance between the peak SAR locations for the antenna pair in mm.

When the SPLSR is <= 0.04, the simultaneous transmission SAR is not required. Otherwise, the enlarged zoom scan and volume scan post-processing procedures will be performed.

Conditions	Exposure Condition	Test Position	SAR Value (W/kg)	Coordinates			Peak Location Separation Distance (R_i, mm)	SPLSR	Simultaneous Transmission SAR Test
				x	y	z			
LTE 4 Ch20175	Head	Left Cheek	1.31	6.09	-4.55	0.06	69.6	0.03	SPLSR < 0.04, Not required
802.11b Ch1			0.34	1.78	0.91	-0.21			

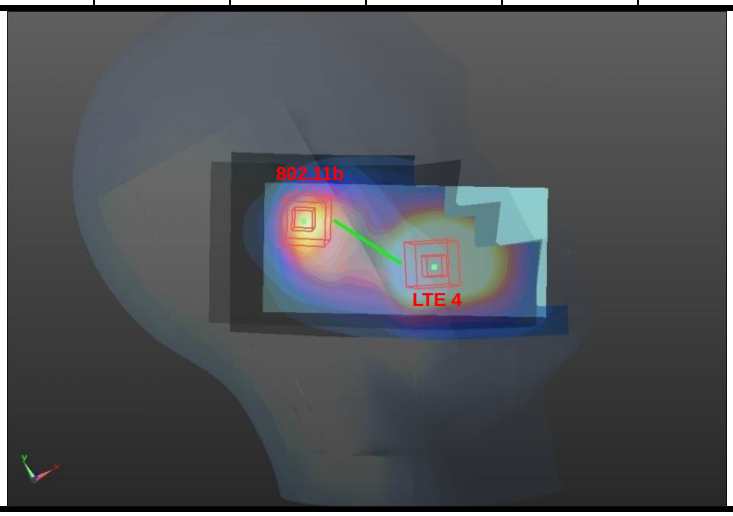

Conditions	Exposure Condition	Test Position	SAR Value (W/kg)	Coordinates			Peak Location Separation Distance (R_i, mm)	SPLSR
				x	y	z		
LTE 4 Ch20175	Head	Left Cheek	1.31	6.09	-4.55	0.06	76.4	0.03
802.11a Ch157			0.44	1.91	1.84	-0.23		

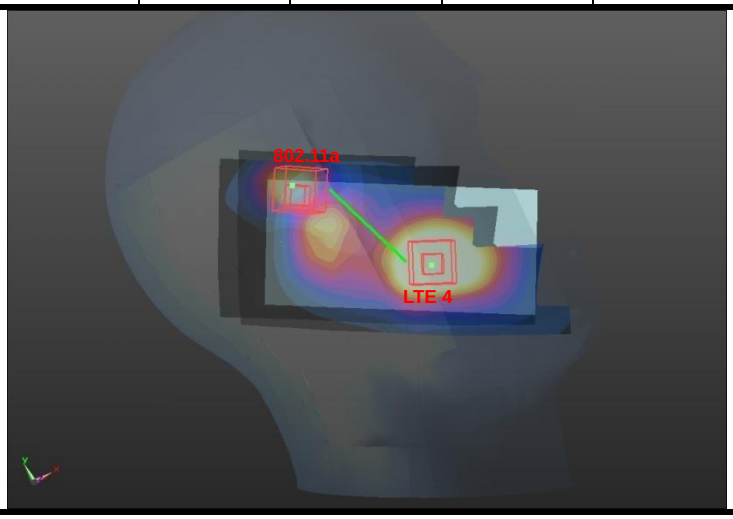

Test Engineer：Mars Chang, and Smith Chen

5. Calibration of Test Equipment

Equipment	Manufacturer	Model	SN	Cal. Date	Cal. Interval
System Validation Dipole	SPEAG	D750V3	1013	Aug. 28, 2014	2 Years
System Validation Dipole	SPEAG	D835V2	4d121	Aug. 28, 2014	2 Years
System Validation Dipole	SPEAG	D1750V2	1055	Aug. 28, 2014	2 Years
System Validation Dipole	SPEAG	D1900V2	5d036	Jan. 21, 2013	2 Years
System Validation Dipole	SPEAG	D2450V2	737	Aug. 21, 2014	2 Years
System Validation Dipole	SPEAG	D2600V2	1020	Aug. 21, 2014	2 Years
System Validation Dipole	SPEAG	D5GHzV2	1019	Aug. 25, 2014	2 Years
Dosimetric E-Field Probe	SPEAG	EX3DV4	3590	Mar. 04, 2014	1 Year
Dosimetric E-Field Probe	SPEAG	EX3DV4	3650	Jul. 28, 2014	1 Year
Dosimetric E-Field Probe	SPEAG	EX3DV4	3864	Jul. 25, 2014	1 Year
Data Acquisition Electronics	SPEAG	DAE3	510	Aug. 26, 2014	1 Year
Data Acquisition Electronics	SPEAG	DAE4	861	Apr. 23, 2014	1 Year
Data Acquisition Electronics	SPEAG	DAE4	1277	Jul. 22, 2014	1 Year
Wireless Communication Test Set	Agilent	E5515C	MY50260642	Nov. 25, 2013	2 Years
Radio Communication Analyzer	Anritsu	MT8802C	6201010285	Aug. 08, 2014	1 Year
ENA Series Network Analyzer	Agilent	E5071C	MY46214281	Jun. 13, 2014	1 Year
EXA Spectrum Analyzer	Agilent	N9010A	MY53470455	Feb. 22, 2014	1 Year
MXG Analong Signal Generator	Agilent	N5181A	MY50143868	Jun. 26, 2014	1 Year
Power Meter	Anritsu	ML2495A	1218009	Jun. 26, 2014	1 Year
Power Sensor	Anritsu	MA2411B	1207252	Jun. 26, 2014	1 Year
Thermometer	YFE	YF-160A	130504579	Aug. 21, 2014	1 Year

6. Measurement Uncertainty

Error Description	Uncertainty Value (±%)	Probability Distribution	Divisor	Ci (1g)	Standard Uncertainty (1g)	Vi
Measurement System						
Probe Calibration	6.0	Normal	1	1	± 6.0 %	∞
Axial Isotropy	4.7	Rectangular	√3	0.7	± 1.9 %	∞
Hemispherical Isotropy	9.6	Rectangular	√3	0.7	± 3.9 %	∞
Boundary Effects	1.0	Rectangular	√3	1	± 0.6 %	∞
Linearity	4.7	Rectangular	√3	1	± 2.7 %	∞
System Detection Limits	1.0	Rectangular	√3	1	± 0.6 %	∞
Readout Electronics	0.6	Normal	1	1	± 0.6 %	∞
Response Time	0.0	Rectangular	√3	1	± 0.0 %	∞
Integration Time	1.7	Rectangular	√3	1	± 1.0 %	∞
RF Ambient Noise	3.0	Rectangular	√3	1	± 1.7 %	∞
RF Ambient Reflections	3.0	Rectangular	√3	1	± 1.7 %	∞
Probe Positioner	0.5	Rectangular	√3	1	± 0.3 %	∞
Probe Positioning	2.9	Rectangular	√3	1	± 1.7 %	∞
Max. SAR Eval.	2.3	Rectangular	√3	1	± 1.3 %	∞
Test Sample Related						
Device Positioning	3.9	Normal	1	1	± 3.9 %	31
Device Holder	2.7	Normal	1	1	± 2.7 %	19
Power Drift	5.0	Rectangular	√3	1	± 2.9 %	∞
Phantom and Setup						
Phantom Uncertainty	4.0	Rectangular	√3	1	± 2.3 %	∞
Liquid Conductivity (Target)	5.0	Rectangular	√3	0.64	± 1.8 %	∞
Liquid Conductivity (Meas.)	5.0	Normal	1	0.64	± 3.2 %	29
Liquid Permittivity (Target)	5.0	Rectangular	√3	0.6	± 1.7 %	∞
Liquid Permittivity (Meas.)	5.0	Normal	1	0.6	± 3.0 %	29
Combined Standard Uncertainty					± 11.7 %	
Expanded Uncertainty (K=2)					**± 23.4 %**	

Uncertainty budget for frequency range 300 MHz to 3 GHz

Error Description	Uncertainty Value (±%)	Probability Distribution	Divisor	Ci (1g)	Standard Uncertainty (1g)	Vi
Measurement System						
Probe Calibration	6.55	Normal	1	1	± 6.55 %	∞
Axial Isotropy	4.7	Rectangular	√3	0.7	± 1.9 %	∞
Hemispherical Isotropy	9.6	Rectangular	√3	0.7	± 3.9 %	∞
Boundary Effects	2.0	Rectangular	√3	1	± 1.2 %	∞
Linearity	4.7	Rectangular	√3	1	± 2.7 %	∞
System Detection Limits	1.0	Rectangular	√3	1	± 0.6 %	∞
Readout Electronics	0.3	Normal	1	1	± 0.3 %	∞
Response Time	0.8	Rectangular	√3	1	± 0.5 %	∞
Integration Time	2.6	Rectangular	√3	1	± 1.5 %	∞
RF Ambient Noise	3.0	Rectangular	√3	1	± 1.7 %	∞
RF Ambient Reflections	3.0	Rectangular	√3	1	± 1.7 %	∞
Probe Positioner	0.8	Rectangular	√3	1	± 0.5 %	∞
Probe Positioning	9.9	Rectangular	√3	1	± 5.7 %	∞
Max. SAR Eval.	4.0	Rectangular	√3	1	± 2.3 %	∞
Test Sample Related						
Device Positioning	3.9	Normal	1	1	± 3.9 %	31
Device Holder	2.7	Normal	1	1	± 2.7 %	19
Power Drift	5.0	Rectangular	√3	1	± 2.9 %	∞
Phantom and Setup						
Phantom Uncertainty	4.0	Rectangular	√3	1	± 2.3 %	∞
Liquid Conductivity (Target)	5.0	Rectangular	√3	0.64	± 1.8 %	∞
Liquid Conductivity (Meas.)	5.0	Normal	1	0.64	± 3.2 %	30
Liquid Permittivity (Target)	5.0	Rectangular	√3	0.6	± 1.7 %	∞
Liquid Permittivity (Meas.)	5.0	Normal	1	0.6	± 3.0 %	30
Combined Standard Uncertainty					± 13.4 %	
Expanded Uncertainty (K=2)					**± 26.8 %**	

Uncertainty budget for frequency range 3 GHz to 6 GHz

7. Information on the Testing Laboratories

We, Bureau Veritas Consumer Products Services (H.K.) Ltd., Taoyuan Branch, were founded in 1988 to provide our best service in EMC, Radio, Telecom and Safety consultation. Our laboratories are accredited and approved according to ISO/IEC 17025.

If you have any comments, please feel free to contact us at the following:

Taiwan HwaYa EMC/RF/Safety/Telecom Lab:
Add: No. 19, Hwa Ya 2nd Rd, Wen Hwa Vil., Kwei Shan Hsiang, Taoyuan Hsien 333, Taiwan, R.O.C.
Tel: 886-3-318-3232
Fax: 886-3-327-0892

Taiwan LinKo EMC/RF Lab:
Add: No. 47-2, 14th Ling, Chia Pau Vil., Linkou Dist., New Taipei City 244, Taiwan, R.O.C.
Tel: 886-2-2605-2180
Fax: 886-2-2605-1924

Taiwan HsinChu EMC/RF Lab:
Add: No. 81-1, Lu Liao Keng, 9th Ling, Wu Lung Vil., Chiung Lin Township, Hsinchu County 307, Taiwan, R.O.C.
Tel: 886-3-593-5343
Fax: 886-3-593-5342

Email: service.adt@tw.bureauveritas.com
Web Site: www.adt.com.tw

The road map of all our labs can be found in our web site also.

---END---

Appendix A. SAR Plots of System Verification

The plots for system verification with largest deviation for each SAR system combination are shown as follows.

System Check_H750_141122

DUT: Dipole 750 MHz; Type: D750V3; SN: 1013

Communication System: CW; Frequency: 750 MHz;Duty Cycle: 1:1
Medium: H07T08N3_1122 Medium parameters used: f = 750 MHz; σ = 0.912 S/m; ε_r = 40.638; ρ = 1000 kg/m^3
Ambient Temperature：22.2 ℃ ; Liquid Temperature：21.8 ℃

DASY5 Configuration:
- Probe: EX3DV4 - SN3864; ConvF(10.44, 10.44, 10.44); Calibrated: 2014/07/25;
- Sensor-Surface: 2mm (Mechanical Surface Detection)
- Electronics: DAE3 Sn510; Calibrated: 2014/08/26
- Phantom: Twin SAM Phantom_1653; Type: QD000P40;
- Measurement SW: DASY52, Version 52.8 (8); SEMCAD X Version 14.6.10 (7331)

Pin=250mW/Area Scan (61x81x1): Interpolated grid: dx=1.500 mm, dy=1.500 mm
Maximum value of SAR (interpolated) = 2.80 W/kg

Pin=250mW/Zoom Scan (5x5x7)/Cube 0: Measurement grid: dx=8mm, dy=8mm, dz=5mm
Reference Value = 56.27 V/m; Power Drift = -0.02 dB
Peak SAR (extrapolated) = 3.31 W/kg
SAR(1 g) = 2.22 W/kg; SAR(10 g) = 1.48 W/kg
Maximum value of SAR (measured) = 2.80 W/kg

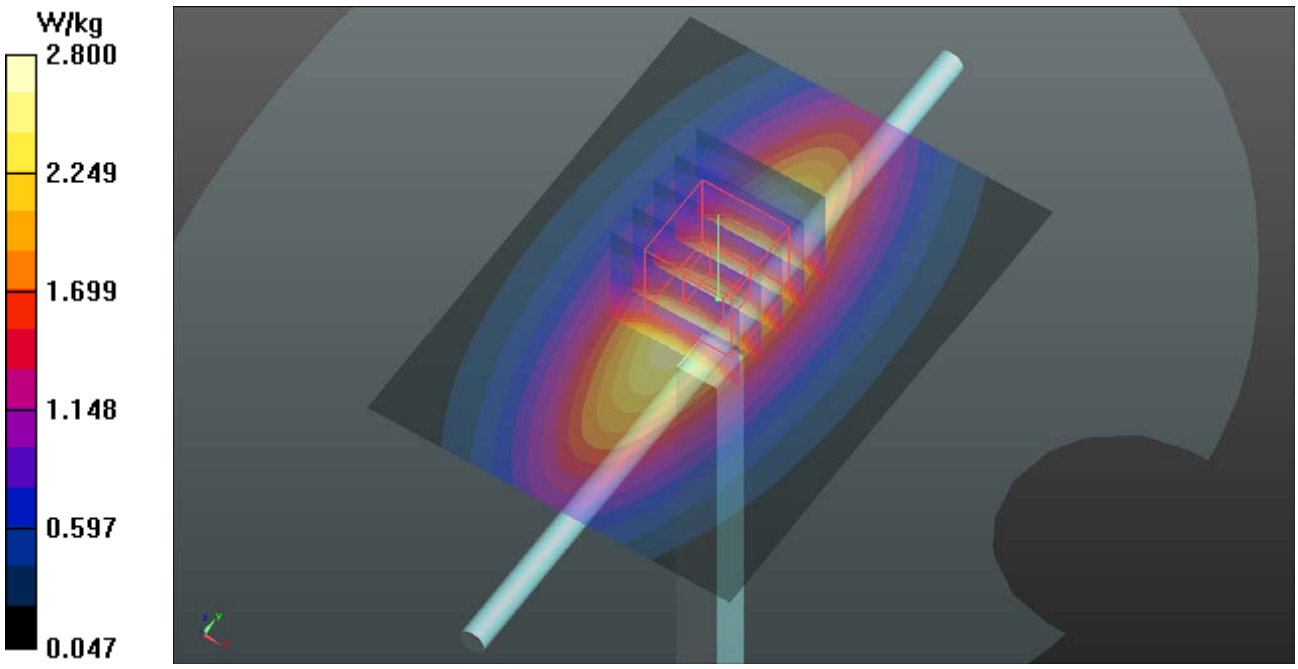

System Check_H835_141122

DUT: Dipole 835 MHz; Type: D835V2; SN: 4d021

Communication System: CW; Frequency: 835 MHz;Duty Cycle: 1:1
Medium: H08T09N3_1122 Medium parameters used: f = 835 MHz; σ = 0.908 S/m; ε_r = 42.576; ρ = 1000 kg/m^3
Ambient Temperature：22.1 ℃ ; Liquid Temperature：21.6 ℃

DASY5 Configuration:
- Probe: EX3DV4 - SN3864; ConvF(10.03, 10.03, 10.03); Calibrated: 2014/07/25;
- Sensor-Surface: 2mm (Mechanical Surface Detection)
- Electronics: DAE3 Sn510; Calibrated: 2014/08/26
- Phantom: Twin SAM Phantom_1653; Type: QD000P40;
- Measurement SW: DASY52, Version 52.8 (8); SEMCAD X Version 14.6.10 (7331)

Pin=250mW/Area Scan (61x81x1): Interpolated grid: dx=1.500 mm, dy=1.500 mm
Maximum value of SAR (interpolated) = 3.01 W/kg

Pin=250mW/Zoom Scan (5x5x7)/Cube 0: Measurement grid: dx=8mm, dy=8mm, dz=5mm
Reference Value = 58.30 V/m; Power Drift = 0.06 dB
Peak SAR (extrapolated) = 3.67 W/kg
SAR(1 g) = 2.41 W/kg; SAR(10 g) = 1.58 W/kg
Maximum value of SAR (measured) = 3.08 W/kg

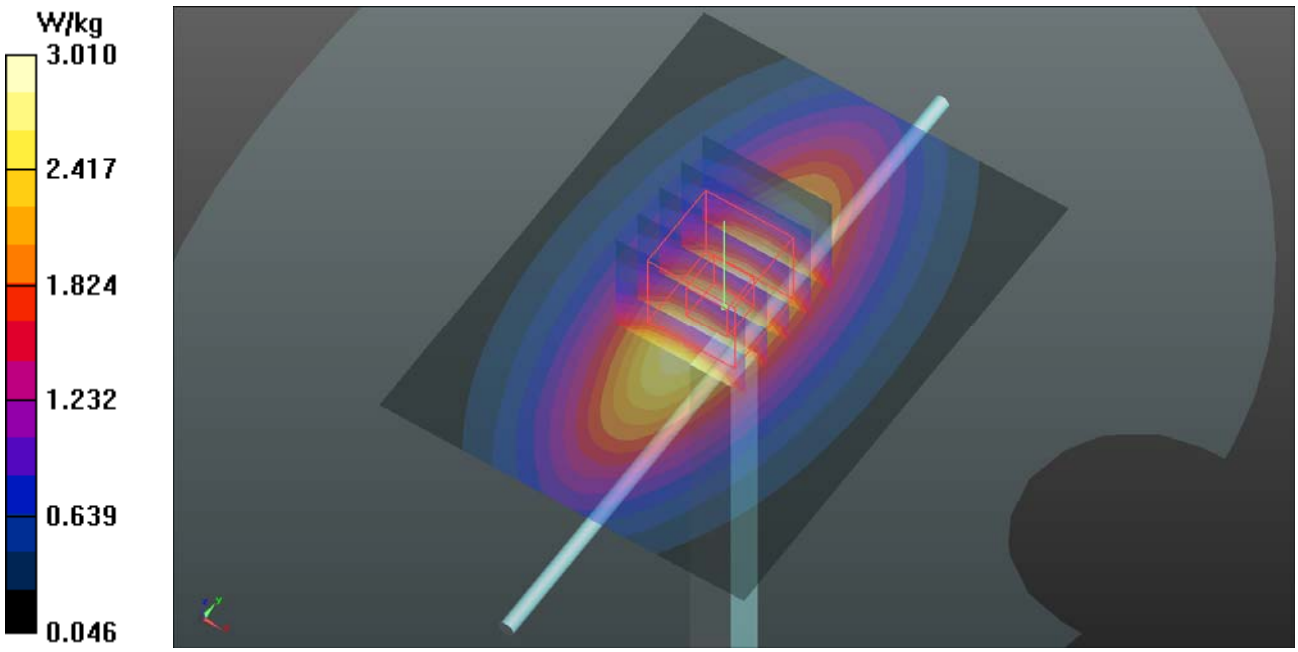

Test Laboratory: Bureau Veritas ADT SAR/HAC Testing Lab Date: 2014/11/23

System Check_H1750_141123

DUT: Dipole 1750 MHz; Type: D1750V2; SN: 1055

Communication System: CW; Frequency: 1750 MHz;Duty Cycle: 1:1
Medium: H17T18N3_1123 Medium parameters used: f = 1750 MHz; σ = 1.387 S/m; ε_r = 41.405; ρ = 1000 kg/m^3
Ambient Temperature：22.3 ℃ ; Liquid Temperature：21.9 ℃

DASY5 Configuration:
- Probe: EX3DV4 - SN3864; ConvF(8.39, 8.39, 8.39); Calibrated: 2014/07/25;
- Sensor-Surface: 2mm (Mechanical Surface Detection)
- Electronics: DAE3 Sn510; Calibrated: 2014/08/26
- Phantom: Twin SAM Phantom_1653; Type: QD000P40;
- Measurement SW: DASY52, Version 52.8 (8); SEMCAD X Version 14.6.10 (7331)

Pin=250mW/Area Scan (61x61x1): Interpolated grid: dx=1.500 mm, dy=1.500 mm
Maximum value of SAR (interpolated) = 13.5 W/kg

Pin=250mW/Zoom Scan (5x5x7)/Cube 0: Measurement grid: dx=8mm, dy=8mm, dz=5mm
Reference Value = 97.75 V/m; Power Drift = 0.01 dB
Peak SAR (extrapolated) = 16.4 W/kg
SAR(1 g) = 9.02 W/kg; SAR(10 g) = 4.79 W/kg
Maximum value of SAR (measured) = 12.7 W/kg

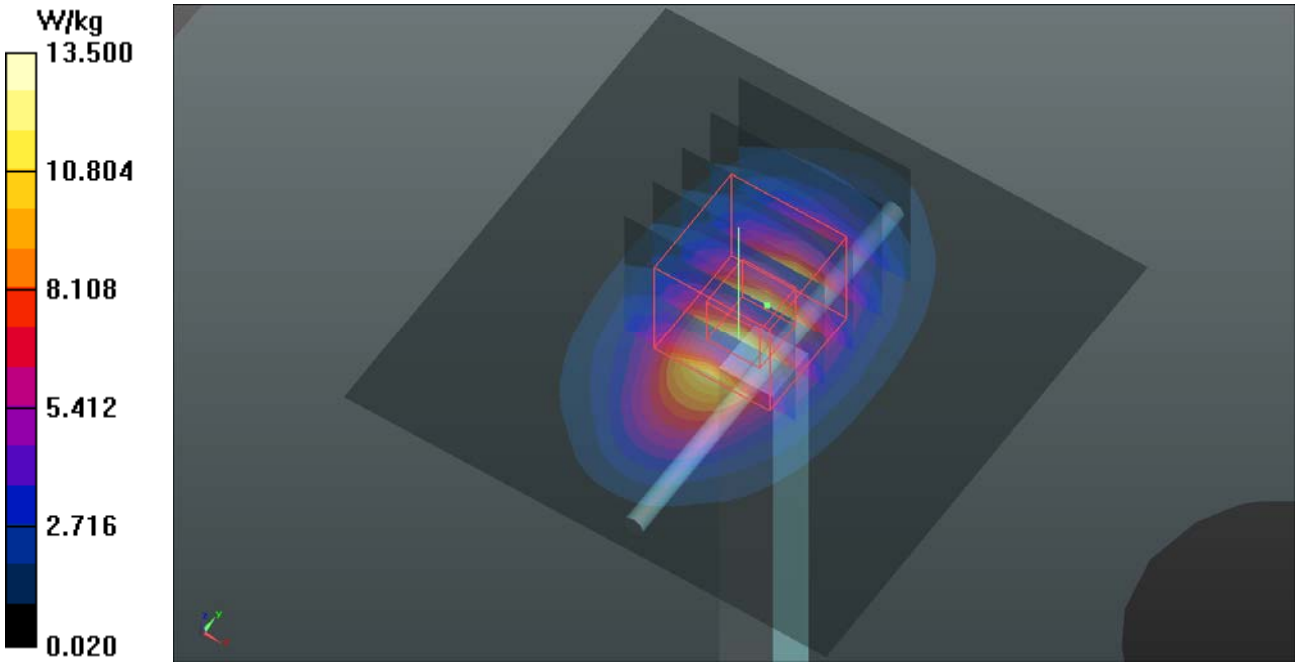

Test Laboratory: Bureau Veritas ADT SAR/HAC Testing Lab Date: 2014/11/23

System Check_H1900_141123

DUT: Dipole 1900 MHz; Type: D1900V2; SN: 5d036

Communication System: CW; Frequency: 1900 MHz;Duty Cycle: 1:1
Medium: H18T19N3_1123 Medium parameters used: f = 1900 MHz; σ = 1.405 S/m; ε_r = 39.67; ρ = 1000 kg/m^3
Ambient Temperature：22.5 ℃ ; Liquid Temperature：21.8 ℃

DASY5 Configuration:
- Probe: EX3DV4 - SN3864; ConvF(8.1, 8.1, 8.1); Calibrated: 2014/07/25;
- Sensor-Surface: 2mm (Mechanical Surface Detection)
- Electronics: DAE3 Sn510; Calibrated: 2014/08/26
- Phantom: Twin SAM Phantom_1653; Type: QD000P40;
- Measurement SW: DASY52, Version 52.8 (8); SEMCAD X Version 14.6.10 (7331)

Pin=250mW/Area Scan (61x61x1): Interpolated grid: dx=1.500 mm, dy=1.500 mm
Maximum value of SAR (interpolated) = 14.4 W/kg

Pin=250mW/Zoom Scan (5x5x7)/Cube 0: Measurement grid: dx=8mm, dy=8mm, dz=5mm
Reference Value = 102.7 V/m; Power Drift = -0.03 dB
Peak SAR (extrapolated) = 18.5 W/kg
SAR(1 g) = 9.96 W/kg; SAR(10 g) = 5.17 W/kg
Maximum value of SAR (measured) = 14.4 W/kg

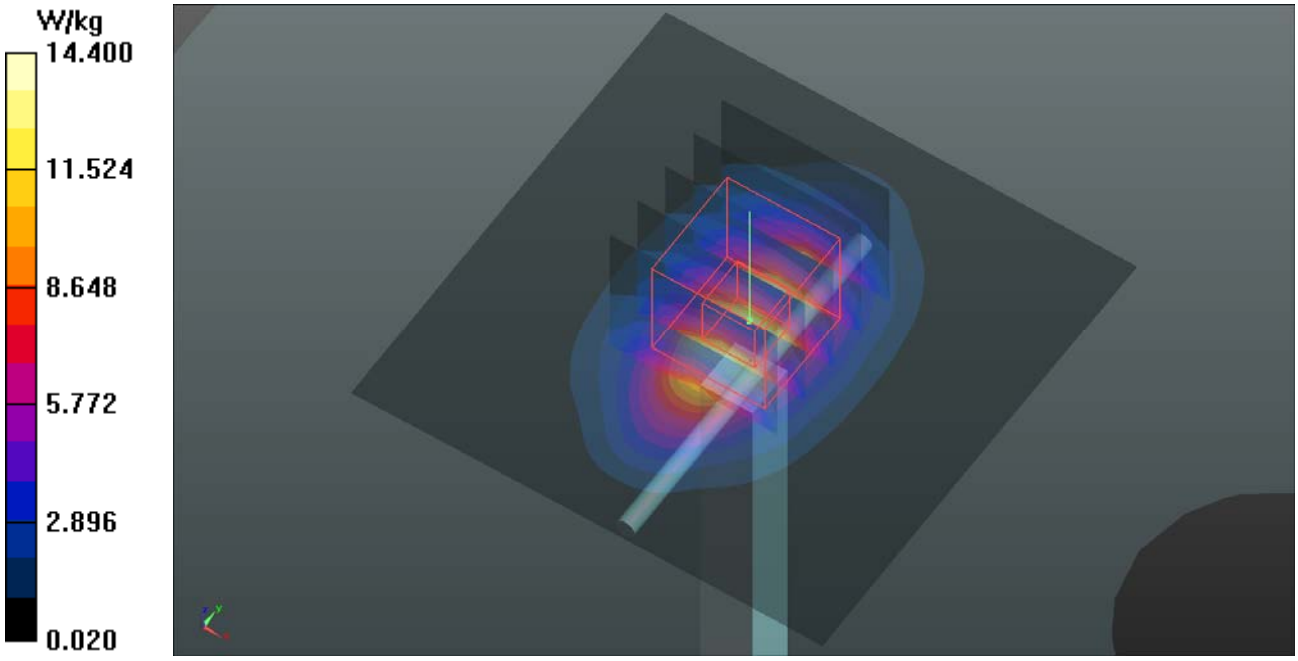

Test Laboratory: Bureau Veritas ADT SAR/HAC Testing Lab Date: 2014/12/05

System Check_H2450_141205

DUT: Dipole 2450 MHz; Type: D2450V2; SN: 737

Communication System: CW; Frequency: 2450 MHz;Duty Cycle: 1:1
Medium: H24T25N1_1205 Medium parameters used: f = 2450 MHz; σ = 1.809 S/m; ε_r = 39.923; ρ = 1000 kg/m^3
Ambient Temperature：22.0 ℃； Liquid Temperature：21.5 ℃

DASY5 Configuration:
- Probe: EX3DV4 - SN3590; ConvF(7.95, 7.95, 7.95); Calibrated: 2014/03/04;
- Sensor-Surface: 2mm (Mechanical Surface Detection)
- Electronics: DAE4 Sn861; Calibrated: 2014/04/23
- Phantom: Twin SAM Phantom_1654; Type: QD000P40;
- Measurement SW: DASY52, Version 52.8 (7); SEMCAD X Version 14.6.10 (7331)

Pin=250mW/Area Scan (81x81x1): Interpolated grid: dx=1.200 mm, dy=1.200 mm
Maximum value of SAR (interpolated) = 19.3 W/kg

Pin=250mW/Zoom Scan (7x7x7)/Cube 0: Measurement grid: dx=5mm, dy=5mm, dz=5mm
Reference Value = 104.9 V/m; Power Drift = -0.03 dB
Peak SAR (extrapolated) = 26.9 W/kg
SAR(1 g) = 12.4 W/kg; SAR(10 g) = 5.6 W/kg
Maximum value of SAR (measured) = 19.4 W/kg

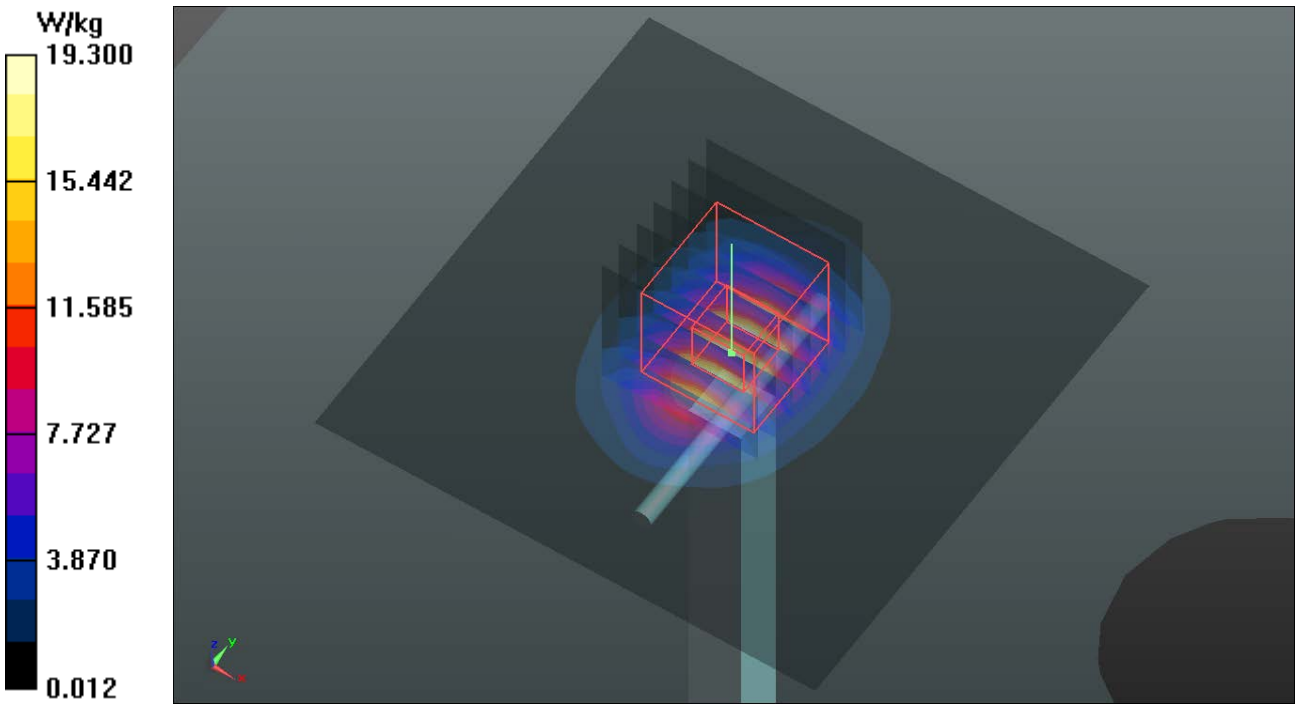

Test Laboratory: Bureau Veritas ADT SAR/HAC Testing Lab Date: 2014/11/26

System Check_H2600_141126

DUT: Dipole 2600 MHz; Type: D2600V2; SN: 1020

Communication System: CW; Frequency: 2600 MHz;Duty Cycle: 1:1
Medium: H25T27N2_1126 Medium parameters used: f = 2600 MHz; σ = 2.053 S/m; ε_r = 37.984; ρ = 1000 kg/m^3
Ambient Temperature：21.6 ℃; Liquid Temperature：21.5 ℃

DASY5 Configuration:
- Probe: EX3DV4 - SN3650; ConvF(7.01, 7.01, 7.01); Calibrated: 2014/07/28;
- Sensor-Surface: 2mm (Mechanical Surface Detection)
- Electronics: DAE4 Sn1277; Calibrated: 2014/07/22
- Phantom: Twin SAM Phantom_1822; Type: QD000P40;
- Measurement SW: DASY52, Version 52.8 (8); SEMCAD X Version 14.6.10 (7331)

Pin=250mW/Area Scan (81x81x1): Interpolated grid: dx=1.200 mm, dy=1.200 mm
Maximum value of SAR (interpolated) = 21.8 W/kg

Pin=250mW/Zoom Scan (7x7x7)/Cube 0: Measurement grid: dx=5mm, dy=5mm, dz=5mm
Reference Value = 104.5 V/m; Power Drift = 0.04 dB
Peak SAR (extrapolated) = 29.8 W/kg
SAR(1 g) = 14.5 W/kg; SAR(10 g) = 6.95 W/kg
Maximum value of SAR (measured) = 22.0 W/kg

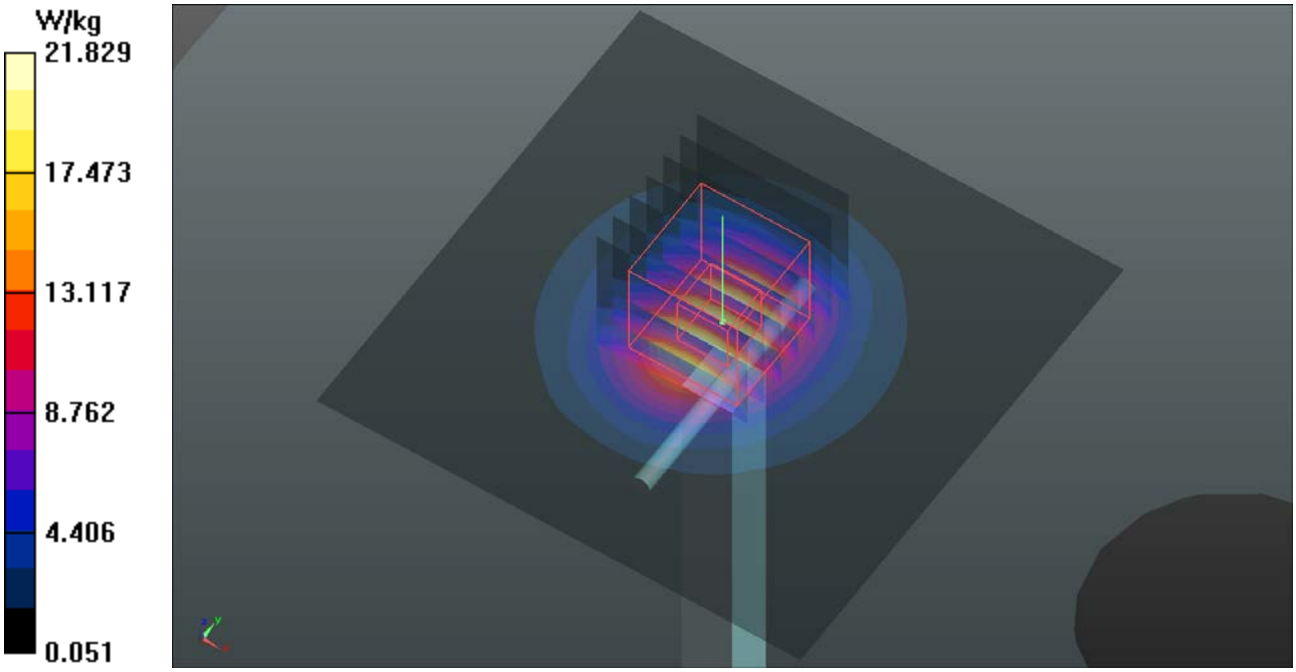

Test Laboratory: Bureau Veritas ADT SAR/HAC Testing Lab Date: 2014/12/05

System Check_H5200_141205

DUT: Dipole 5 GHz; Type: D5GHzV2; SN: 1019

Communication System: CW; Frequency: 5200 MHz;Duty Cycle: 1:1
Medium: H50T60N3_1205 Medium parameters used: f = 5200 MHz; σ = 4.766 S/m; ε_r = 35.016; ρ = 1000 kg/m^3
Ambient Temperature：22.5 ℃ ; Liquid Temperature：21.7 ℃

DASY5 Configuration:
- Probe: EX3DV4 - SN3590; ConvF(5.57, 5.57, 5.57); Calibrated: 2014/03/04;
- Sensor-Surface: 2mm (Mechanical Surface Detection)
- Electronics: DAE4 Sn861; Calibrated: 2014/04/23
- Phantom: Twin SAM Phantom_1202; Type: QD000P40;
- Measurement SW: DASY52, Version 52.8 (8); SEMCAD X Version 14.6.10 (7331)

Pin=100mW/Area Scan (91x91x1): Interpolated grid: dx=1.000 mm, dy=1.000 mm
Maximum value of SAR (interpolated) = 15.5 W/kg

Pin=100mW/Zoom Scan (7x7x12)/Cube 0: Measurement grid: dx=4mm, dy=4mm, dz=2mm
Reference Value = 62.28 V/m; Power Drift = -0.02 dB
Peak SAR (extrapolated) = 32.5 W/kg
SAR(1 g) = 7.87 W/kg; SAR(10 g) = 2.25 W/kg
Maximum value of SAR (measured) = 16.4 W/kg

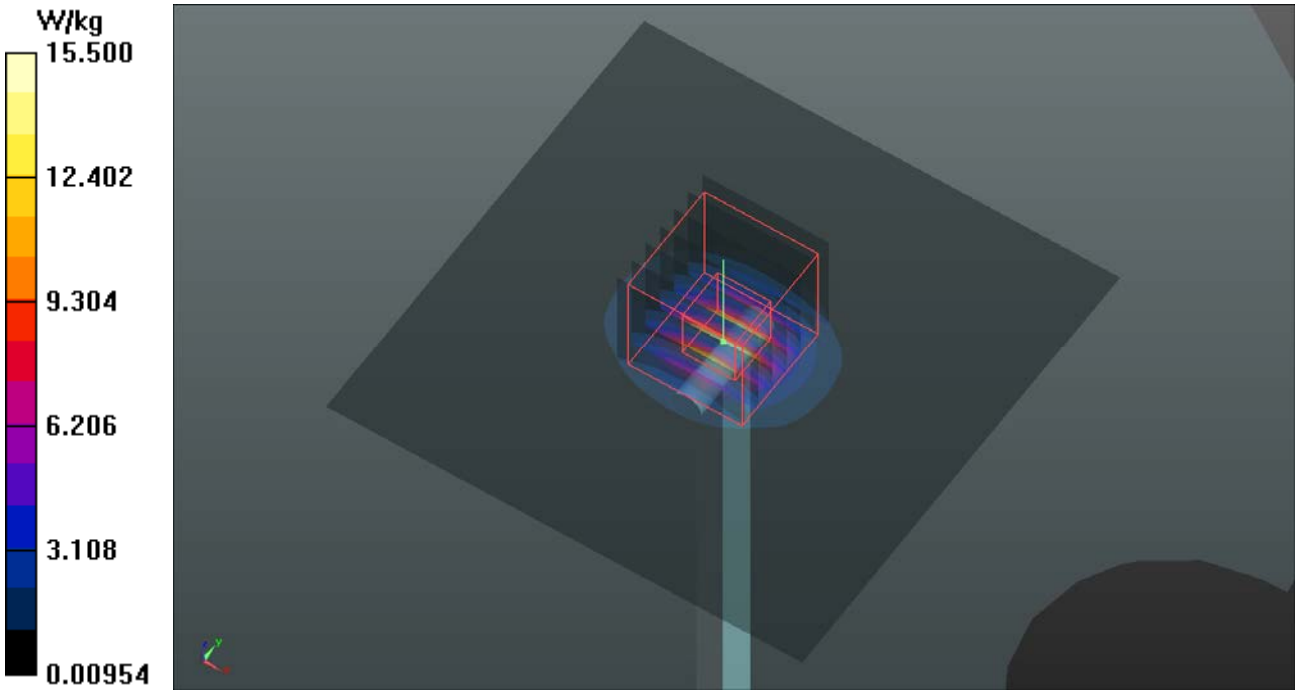

Test Laboratory: Bureau Veritas ADT SAR/HAC Testing Lab Date: 2014/12/05

System Check_H5300_141205

DUT: Dipole 5 GHz; Type: D5GHzV2; SN: 1019

Communication System: CW; Frequency: 5300 MHz;Duty Cycle: 1:1
Medium: H50T60N3_1205 Medium parameters used: f = 5300 MHz; σ = 4.874 S/m; ε_r = 34.87; ρ = 1000 kg/m^3
Ambient Temperature：22.5 ℃; Liquid Temperature：21.7 ℃

DASY5 Configuration:
- Probe: EX3DV4 - SN3590; ConvF(5.33, 5.33, 5.33); Calibrated: 2014/03/04;
- Sensor-Surface: 2mm (Mechanical Surface Detection)
- Electronics: DAE4 Sn861; Calibrated: 2014/04/23
- Phantom: Twin SAM Phantom_1202; Type: QD000P40;
- Measurement SW: DASY52, Version 52.8 (7); SEMCAD X Version 14.6.10 (7331)

Pin=100mW/Area Scan (91x91x1): Interpolated grid: dx=1.000 mm, dy=1.000 mm
Maximum value of SAR (interpolated) = 17.4 W/kg

Pin=100mW/Zoom Scan (7x7x12)/Cube 0: Measurement grid: dx=4mm, dy=4mm, dz=2mm
Reference Value = 62.94 V/m; Power Drift = 0.03 dB
Peak SAR (extrapolated) = 35.2 W/kg
SAR(1 g) = 8.49 W/kg; SAR(10 g) = 2.4 W/kg
Maximum value of SAR (measured) = 17.6 W/kg

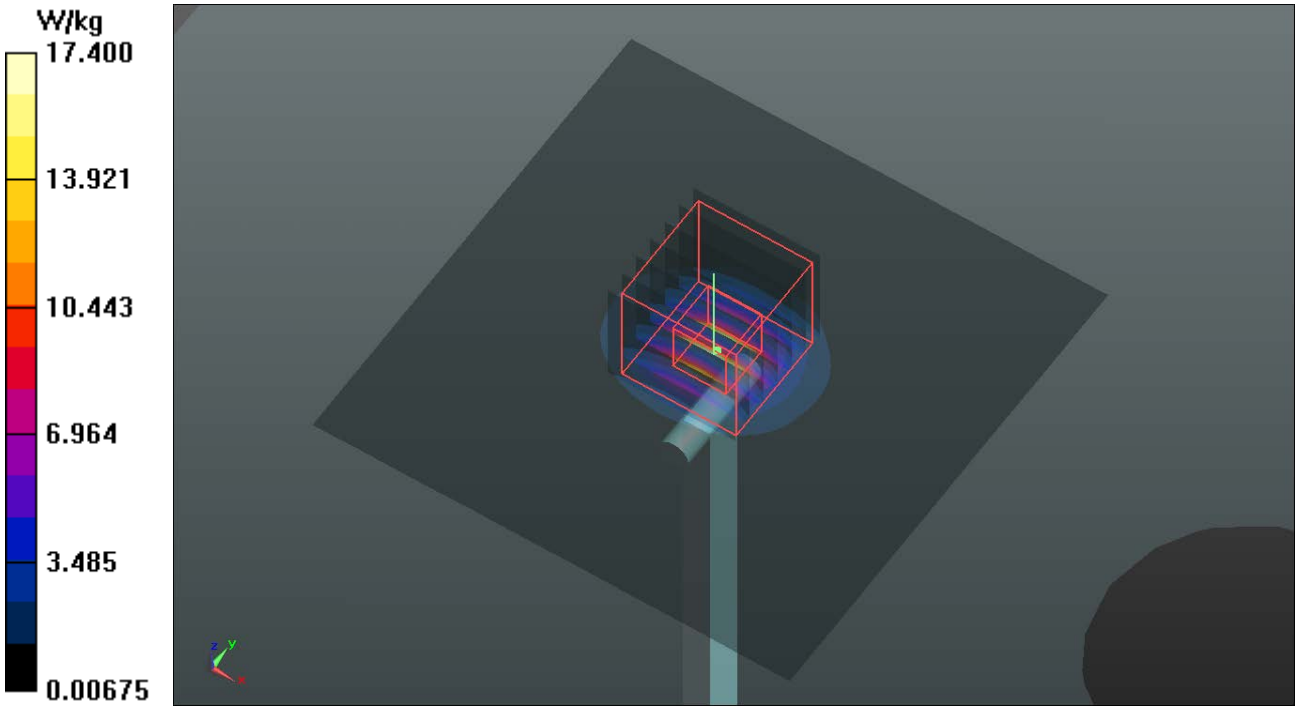

Test Laboratory: Bureau Veritas ADT SAR/HAC Testing Lab Date: 2014/12/05

System Check_H5600_141205

DUT: Dipole 5 GHz; Type: D5GHzV2; SN: 1019

Communication System: CW; Frequency: 5600 MHz;Duty Cycle: 1:1
Medium: H50T60N3_1205 Medium parameters used: f = 5600 MHz; σ = 5.235 S/m; ε_r = 34.35; ρ = 1000 kg/m^3
Ambient Temperature：22.5 ℃； Liquid Temperature：21.7 ℃

DASY5 Configuration:
- Probe: EX3DV4 - SN3590; ConvF(4.94, 4.94, 4.94); Calibrated: 2014/03/04;
- Sensor-Surface: 2mm (Mechanical Surface Detection)
- Electronics: DAE4 Sn861; Calibrated: 2014/04/23
- Phantom: Twin SAM Phantom_1202; Type: QD000P40;
- Measurement SW: DASY52, Version 52.8 (7); SEMCAD X Version 14.6.10 (7331)

Pin=100mW/Area Scan (91x91x1): Interpolated grid: dx=1.000 mm, dy=1.000 mm
Maximum value of SAR (interpolated) = 16.9 W/kg

Pin=100mW/Zoom Scan (7x7x12)/Cube 0: Measurement grid: dx=4mm, dy=4mm, dz=2mm
Reference Value = 62.98 V/m; Power Drift = -0.01 dB
Peak SAR (extrapolated) = 36.8 W/kg
SAR(1 g) = 8.46 W/kg; SAR(10 g) = 2.37 W/kg
Maximum value of SAR (measured) = 17.7 W/kg

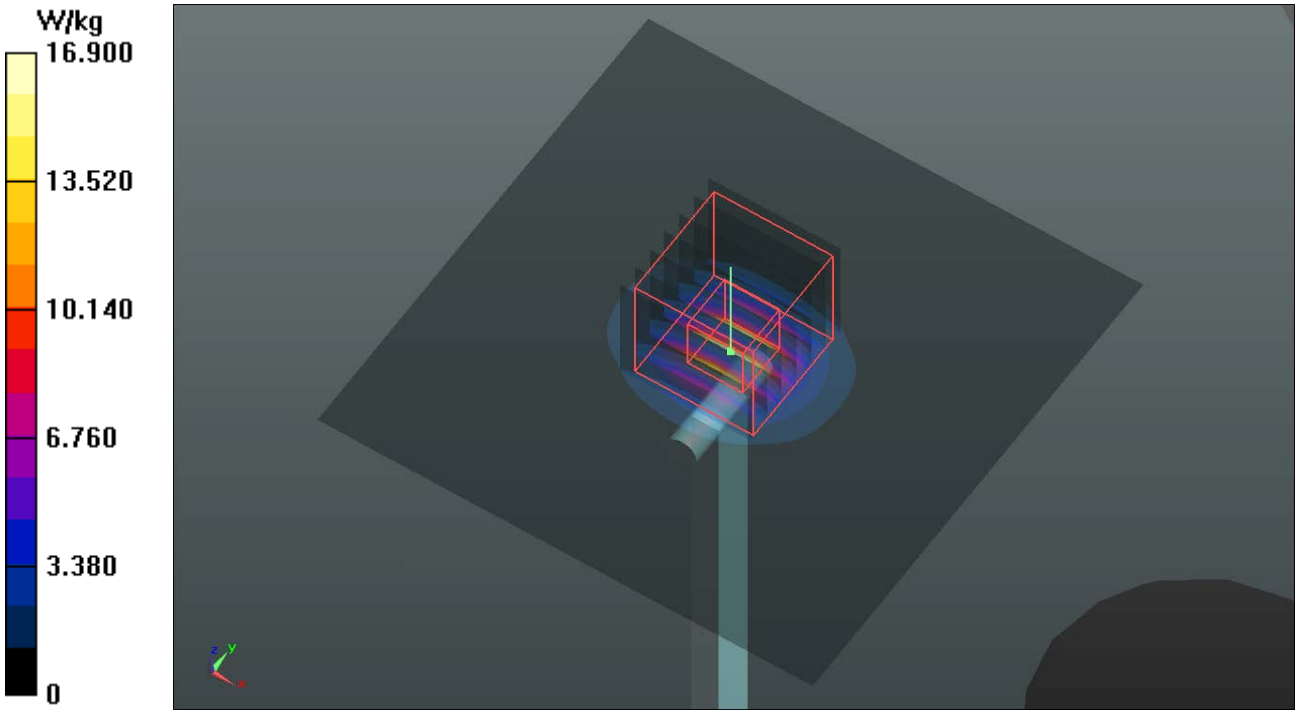

Test Laboratory: Bureau Veritas ADT SAR/HAC Testing Lab Date: 2014/12/05

System Check_H5800_141205

DUT: Dipole 5 GHz; Type: D5GHzV2; SN: 1019

Communication System: CW; Frequency: 5800 MHz;Duty Cycle: 1:1
Medium: H50T60N3_1205 Medium parameters used: f = 5800 MHz; σ = 5.456 S/m; ε_r = 33.957; ρ = 1000 kg/m^3
Ambient Temperature：22.5 ℃； Liquid Temperature：21.7 ℃

DASY5 Configuration:
- Probe: EX3DV4 - SN3590; ConvF(4.89, 4.89, 4.89); Calibrated: 2014/03/04;
- Sensor-Surface: 2mm (Mechanical Surface Detection)
- Electronics: DAE4 Sn861; Calibrated: 2014/04/23
- Phantom: Twin SAM Phantom_1202; Type: QD000P40;
- Measurement SW: DASY52, Version 52.8 (7); SEMCAD X Version 14.6.10 (7331)

Pin=100mW/Area Scan (91x91x1): Interpolated grid: dx=1.000 mm, dy=1.000 mm
Maximum value of SAR (interpolated) = 16.1 W/kg

Pin=100mW/Zoom Scan (7x7x12)/Cube 0: Measurement grid: dx=4mm, dy=4mm, dz=2mm
Reference Value = 60.08 V/m; Power Drift = -0.01 dB
Peak SAR (extrapolated) = 35.9 W/kg
SAR(1 g) = 7.99 W/kg; SAR(10 g) = 2.26 W/kg
Maximum value of SAR (measured) = 17.1 W/kg

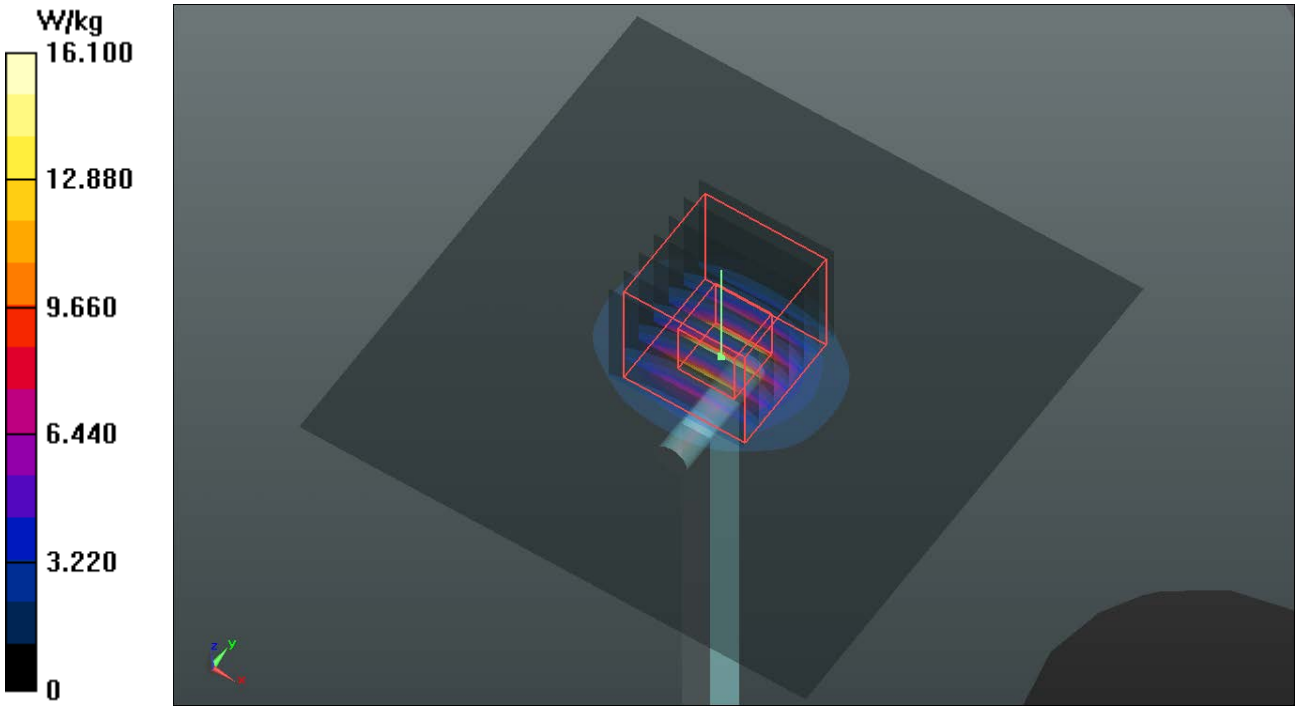

Test Laboratory: Bureau Veritas ADT SAR/HAC Testing Lab Date: 2014/11/25

System Check_B750_141125

DUT: Dipole 750 MHz; Type: D750V3; SN: 1013

Communication System: CW; Frequency: 750 MHz;Duty Cycle: 1:1
Medium: B07T08N3_1125 Medium parameters used: f = 750 MHz; σ = 0.966 S/m; ε_r = 55.176; ρ = 1000 kg/m^3
Ambient Temperature：21.9 ℃； Liquid Temperature：21.5 ℃

DASY5 Configuration:
- Probe: EX3DV4 - SN3650; ConvF(9.62, 9.62, 9.62); Calibrated: 2014/07/28;
- Sensor-Surface: 2mm (Mechanical Surface Detection)
- Electronics: DAE4 Sn1277; Calibrated: 2014/07/22
- Phantom: Twin SAM Phantom_1485; Type: QD000P40;
- Measurement SW: DASY52, Version 52.8 (8); SEMCAD X Version 14.6.10 (7331)

Pin=250mW/Area Scan (61x81x1): Interpolated grid: dx=1.500 mm, dy=1.500 mm
Maximum value of SAR (interpolated) = 2.94 W/kg

Pin=250mW/Zoom Scan (5x5x7)/Cube 0: Measurement grid: dx=8mm, dy=8mm, dz=5mm
Reference Value = 56.23 V/m; Power Drift = -0.02 dB
Peak SAR (extrapolated) = 3.44 W/kg
SAR(1 g) = 2.35 W/kg; SAR(10 g) = 1.58 W/kg
Maximum value of SAR (measured) = 2.94 W/kg

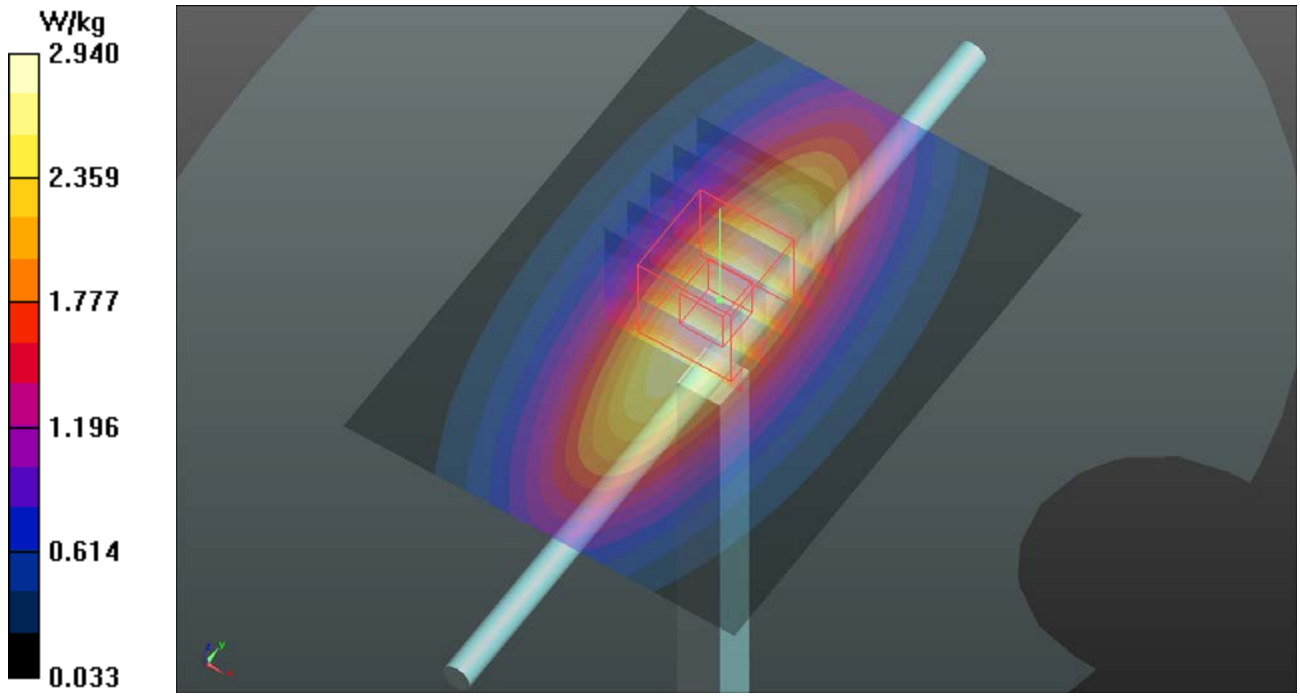

Test Laboratory: Bureau Veritas ADT SAR/HAC Testing Lab Date: 2014/11/25

System Check_B835_141125

DUT: Dipole 835 MHz; Type: D835V2; SN: 4d121

Communication System: CW; Frequency: 835 MHz;Duty Cycle: 1:1
Medium: B08T09N3_1125 Medium parameters used: f = 835 MHz; σ = 0.955 S/m; ε_r = 55.941; ρ = 1000 kg/m^3
Ambient Temperature：21.9 ℃； Liquid Temperature：21.5 ℃

DASY5 Configuration:
- Probe: EX3DV4 - SN3650; ConvF(9.7, 9.7, 9.7); Calibrated: 2014/07/28;
- Sensor-Surface: 2mm (Mechanical Surface Detection)
- Electronics: DAE4 Sn1277; Calibrated: 2014/07/22
- Phantom: Twin SAM Phantom_1485; Type: QD000P40;
- Measurement SW: DASY52, Version 52.8 (8); SEMCAD X Version 14.6.10 (7331)

Pin=250mW/Area Scan (61x61x1): Interpolated grid: dx=1.500 mm, dy=1.500 mm
Maximum value of SAR (interpolated) = 3.18 W/kg

Pin=250mW/Zoom Scan (5x5x7)/Cube 0: Measurement grid: dx=8mm, dy=8mm, dz=5mm
Reference Value = 55.33 V/m; Power Drift = -0.09 dB
Peak SAR (extrapolated) = 3.71 W/kg
SAR(1 g) = 2.45 W/kg; SAR(10 g) = 1.61 W/kg
Maximum value of SAR (measured) = 3.11 W/kg

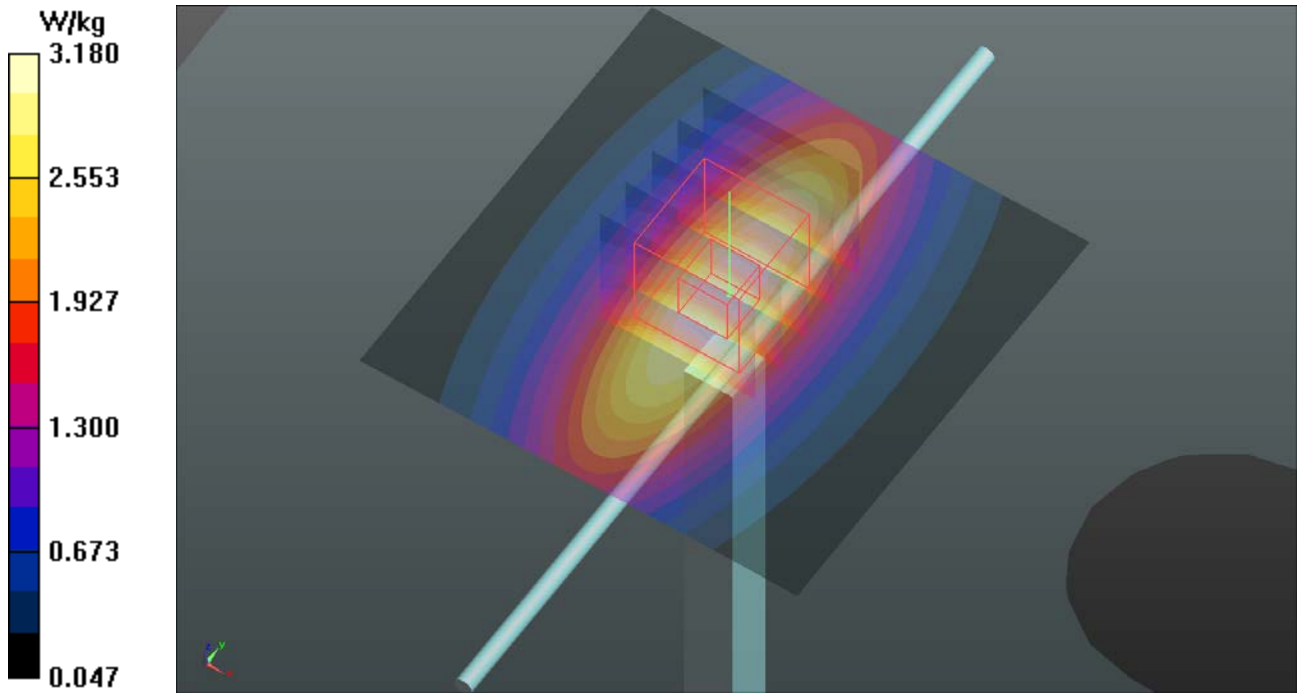

Test Laboratory: Bureau Veritas ADT SAR/HAC Testing Lab Date: 2014/11/24

System Check_B1750_141124

DUT: Dipole 1750 MHz; Type: D1750V2; SN: 1055

Communication System: CW; Frequency: 1750 MHz;Duty Cycle: 1:1
Medium: B17T18N3_1124 Medium parameters used: f = 1750 MHz; σ = 1.486 S/m; ε_r = 52.091; ρ = 1000 kg/m^3
Ambient Temperature：21.6 ℃; Liquid Temperature：21.3 ℃

DASY5 Configuration:
- Probe: EX3DV4 - SN3650; ConvF(7.78, 7.78, 7.78); Calibrated: 2014/07/28;
- Sensor-Surface: 2mm (Mechanical Surface Detection)
- Electronics: DAE4 Sn1277; Calibrated: 2014/07/22
- Phantom: Twin SAM Phantom_1822; Type: QD000P40;
- Measurement SW: DASY52, Version 52.8 (8); SEMCAD X Version 14.6.10 (7331)

Pin=250mW/Area Scan (61x61x1): Interpolated grid: dx=1.500 mm, dy=1.500 mm
Maximum value of SAR (interpolated) = 12.4 W/kg

Pin=250mW/Zoom Scan (5x5x7)/Cube 0: Measurement grid: dx=8mm, dy=8mm, dz=5mm
Reference Value = 89.05 V/m; Power Drift = 0.17 dB
Peak SAR (extrapolated) = 15.4 W/kg
SAR(1 g) = 8.81 W/kg; SAR(10 g) = 4.72 W/kg
Maximum value of SAR (measured) = 12.4 W/kg

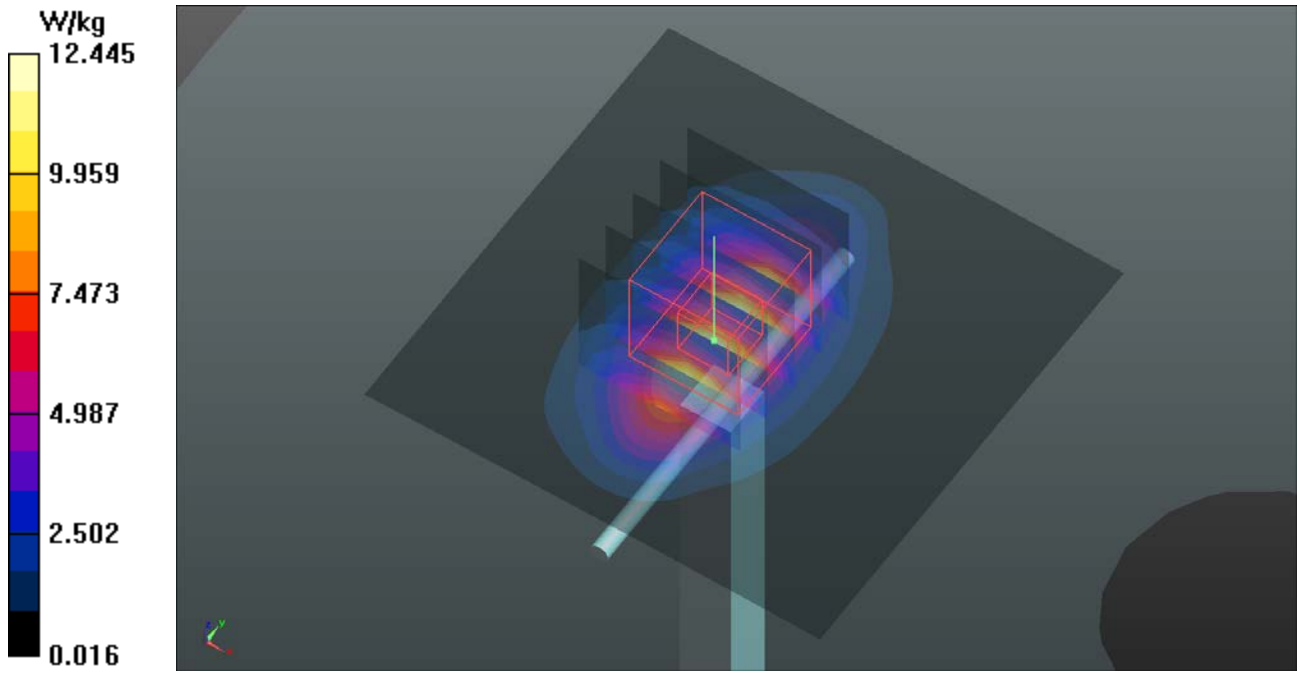

Test Laboratory: Bureau Veritas ADT SAR/HAC Testing Lab Date: 2014/11/24

System Check_B1900_141124

DUT: Dipole 1900 MHz; Type: D1900V2; SN: 5d036

Communication System: CW; Frequency: 1900 MHz;Duty Cycle: 1:1
Medium: B18T19N3_1124 Medium parameters used: f = 1900 MHz; σ = 1.558 S/m; ε_r = 55.468; ρ = 1000 kg/m^3
Ambient Temperature：21.7 ℃; Liquid Temperature：21.3 ℃

DASY5 Configuration:
- Probe: EX3DV4 - SN3650; ConvF(7.41, 7.41, 7.41); Calibrated: 2014/07/28;
- Sensor-Surface: 2mm (Mechanical Surface Detection)
- Electronics: DAE4 Sn1277; Calibrated: 2014/07/22
- Phantom: Twin SAM Phantom_1822; Type: QD000P40;
- Measurement SW: DASY52, Version 52.8 (8); SEMCAD X Version 14.6.10 (7331)

Pin=250mW/Area Scan (61x61x1): Interpolated grid: dx=1.500 mm, dy=1.500 mm
Maximum value of SAR (interpolated) = 13.7 W/kg

Pin=250mW/Zoom Scan (5x5x7)/Cube 0: Measurement grid: dx=8mm, dy=8mm, dz=5mm
Reference Value = 95.10 V/m; Power Drift = 0.06 dB
Peak SAR (extrapolated) = 17.4 W/kg
SAR(1 g) = 9.48 W/kg; SAR(10 g) = 4.85 W/kg
Maximum value of SAR (measured) = 13.7 W/kg

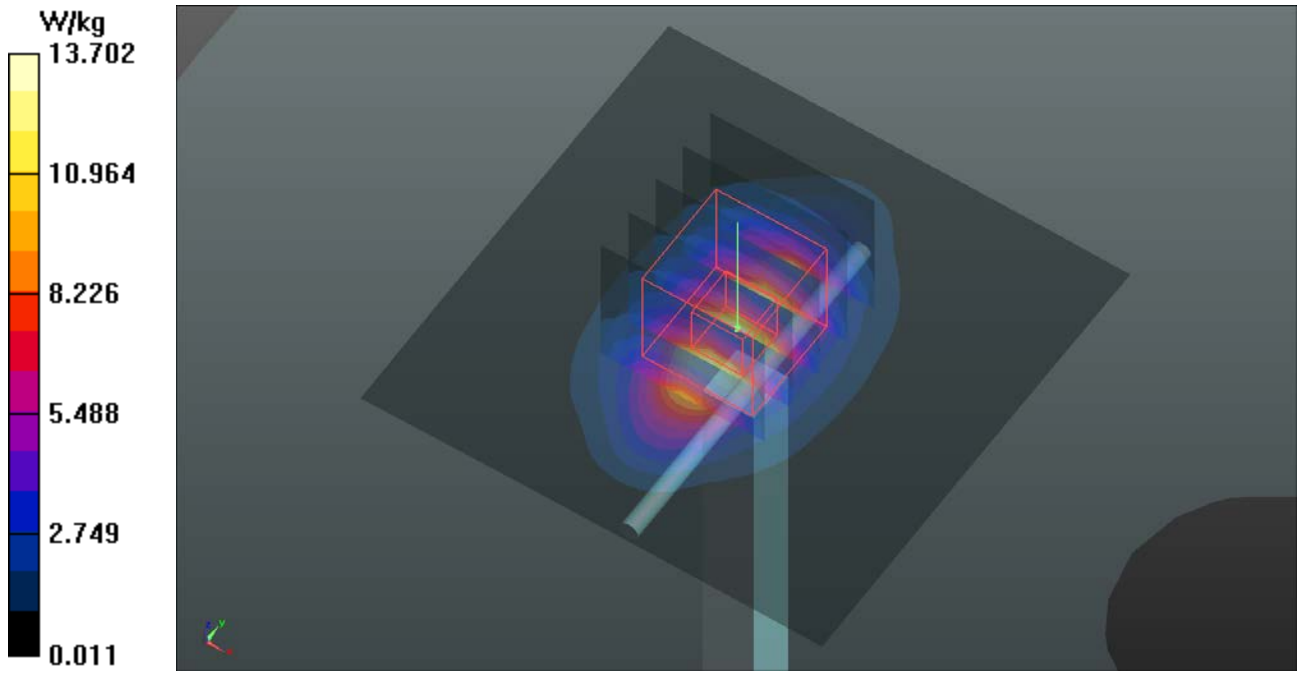

Test Laboratory: Bureau Veritas ADT SAR/HAC Testing Lab Date: 2014/12/05

System Check_B2450_141205

DUT: Dipole 2450 MHz; Type: D2450V2; SN: 737

Communication System: CW; Frequency: 2450 MHz;Duty Cycle: 1:1
Medium: B24T25N1_1205 Medium parameters used: f = 2450 MHz; σ = 1.972 S/m; ε_r = 51.36; ρ = 1000 kg/m^3
Ambient Temperature：22.5 ℃; Liquid Temperature：21.7 ℃

DASY5 Configuration:
- Probe: EX3DV4 - SN3590; ConvF(7.72, 7.72, 7.72); Calibrated: 2014/03/04;
- Sensor-Surface: 2mm (Mechanical Surface Detection)
- Electronics: DAE4 Sn861; Calibrated: 2014/04/23
- Phantom: Twin SAM Phantom_1654; Type: QD000P40;
- Measurement SW: DASY52, Version 52.8 (7); SEMCAD X Version 14.6.10 (7331)

Pin=250mW/Area Scan (81x81x1): Interpolated grid: dx=1.200 mm, dy=1.200 mm
Maximum value of SAR (interpolated) = 20.4 W/kg

Pin=250mW/Zoom Scan (7x7x7)/Cube 0: Measurement grid: dx=5mm, dy=5mm, dz=5mm
Reference Value = 102.3 V/m; Power Drift = -0.05 dB
Peak SAR (extrapolated) = 28.4 W/kg
SAR(1 g) = 13.2 W/kg; SAR(10 g) = 5.99 W/kg
Maximum value of SAR (measured) = 20.6 W/kg

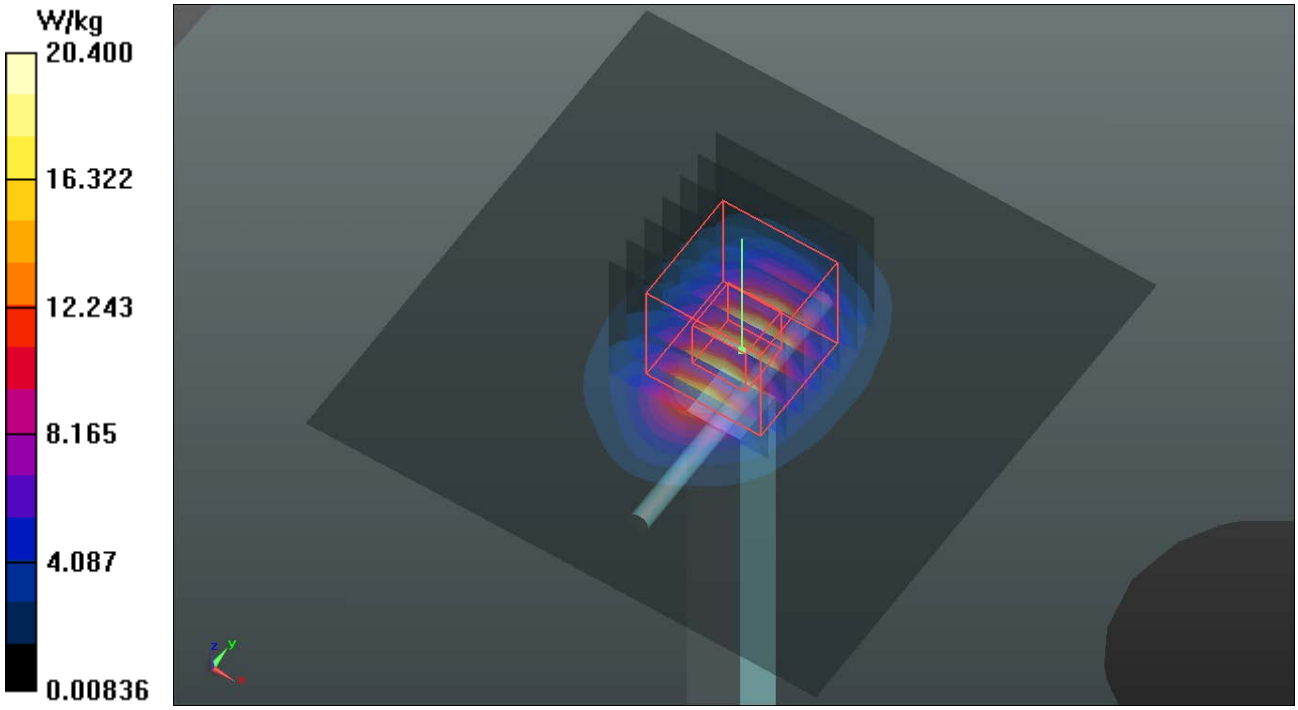

Test Laboratory: Bureau Veritas ADT SAR/HAC Testing Lab Date: 2014/11/24

System Check_B2600_141124

DUT: Dipole 2600 MHz; Type: D2600V2; SN: 1020

Communication System: CW; Frequency: 2600 MHz;Duty Cycle: 1:1
Medium: B25T27N1_1124 Medium parameters used: f = 2600 MHz; σ = 2.177 S/m; ε_r = 52.076; ρ = 1000 kg/m^3
Ambient Temperature：21.5 ℃; Liquid Temperature：21.3 ℃

DASY5 Configuration:
- Probe: EX3DV4 - SN3650; ConvF(6.69, 6.69, 6.69); Calibrated: 2014/07/28;
- Sensor-Surface: 2mm (Mechanical Surface Detection)
- Electronics: DAE4 Sn1277; Calibrated: 2014/07/22
- Phantom: Twin SAM Phantom_1485; Type: QD000P40;
- Measurement SW: DASY52, Version 52.8 (8); SEMCAD X Version 14.6.10 (7331)

Pin=250mW/Area Scan (81x81x1): Interpolated grid: dx=1.200 mm, dy=1.200 mm
Maximum value of SAR (interpolated) = 21.7 W/kg

Pin=250mW/Zoom Scan (7x7x7)/Cube 0: Measurement grid: dx=5mm, dy=5mm, dz=5mm
Reference Value = 98.57 V/m; Power Drift = 0.02 dB
Peak SAR (extrapolated) = 29.7 W/kg
SAR(1 g) = 13.6 W/kg; SAR(10 g) = 6.05 W/kg
Maximum value of SAR (measured) = 21.3 W/kg

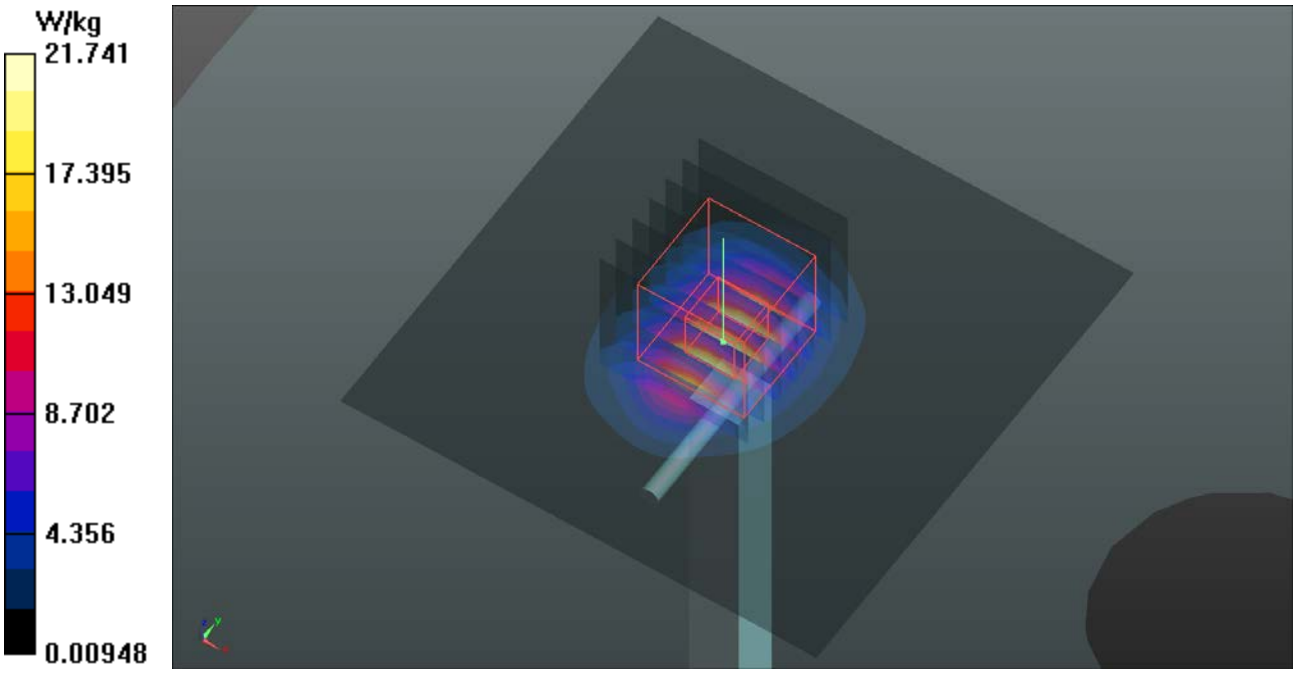

Test Laboratory: Bureau Veritas ADT SAR/HAC Testing Lab Date: 2014/12/08

System Check_B5200_141208

DUT: Dipole 5 GHz; Type: D5GHzV2; SN: 1019

Communication System: CW; Frequency: 5200 MHz;Duty Cycle: 1:1
Medium: B50T60N2_1208 Medium parameters used: f = 5200 MHz; σ = 5.327 S/m; ε_r = 47.281; ρ = 1000 kg/m^3
Ambient Temperature：22.8 ℃； Liquid Temperature：21.7 ℃

DASY5 Configuration:
- Probe: EX3DV4 - SN3590; ConvF(5.16, 5.16, 5.16); Calibrated: 2014/03/04;
- Sensor-Surface: 2mm (Mechanical Surface Detection)
- Electronics: DAE4 Sn861; Calibrated: 2014/04/23
- Phantom: Twin SAM Phantom_1654; Type: QD000P40;
- Measurement SW: DASY52, Version 52.8 (7); SEMCAD X Version 14.6.10 (7331)

Pin=100mW/Area Scan (91x91x1): Interpolated grid: dx=1.000 mm, dy=1.000 mm
Maximum value of SAR (interpolated) = 14.6 W/kg

Pin=100mW/Zoom Scan (7x7x12)/Cube 0: Measurement grid: dx=4mm, dy=4mm, dz=2mm
Reference Value = 56.72 V/m; Power Drift = 0.03 dB
Peak SAR (extrapolated) = 28.5 W/kg
SAR(1 g) = 7.03 W/kg; SAR(10 g) = 1.99 W/kg
Maximum value of SAR (measured) = 14.8 W/kg

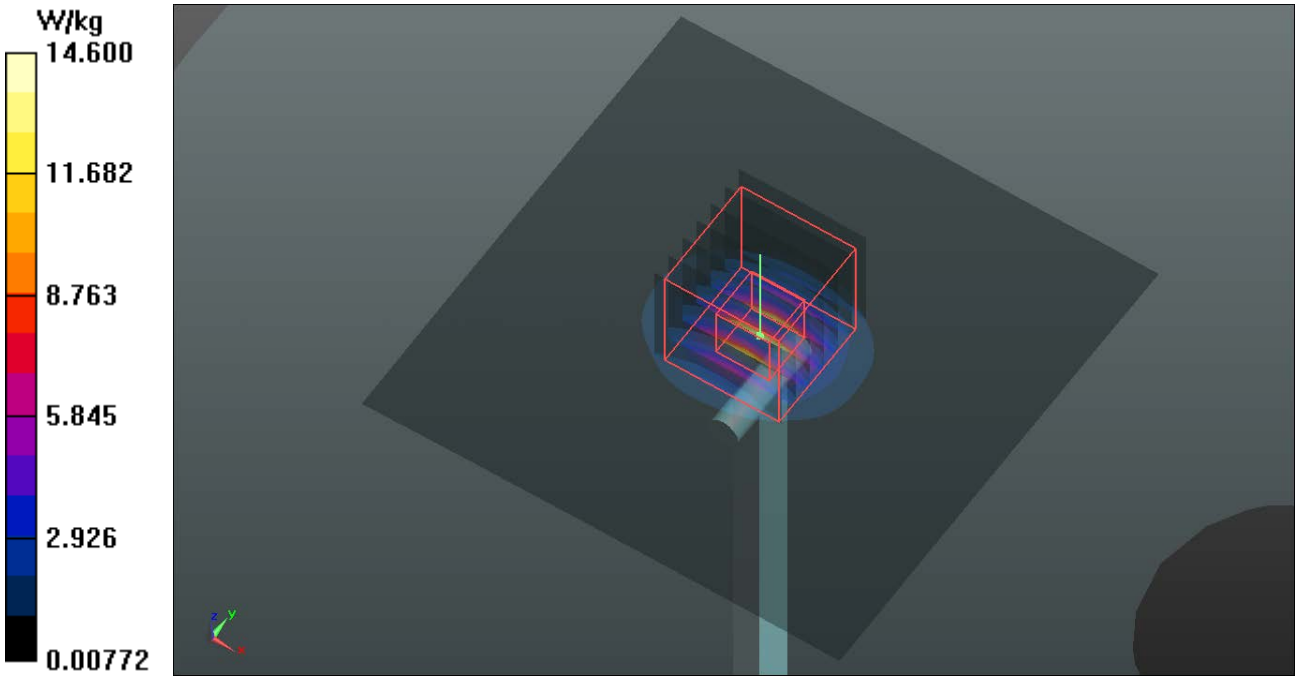

Test Laboratory: Bureau Veritas ADT SAR/HAC Testing Lab Date: 2014/12/08

System Check_B5300_141208

DUT: Dipole 5 GHz; Type: D5GHzV2; SN: 1019

Communication System: CW; Frequency: 5300 MHz;Duty Cycle: 1:1
Medium: B50T60N2_1208 Medium parameters used: f = 5300 MHz; σ = 5.462 S/m; ε_r = 47.107; ρ = 1000 kg/m^3
Ambient Temperature：22.8 ℃； Liquid Temperature：21.7 ℃

DASY5 Configuration:
- Probe: EX3DV4 - SN3590; ConvF(4.92, 4.92, 4.92); Calibrated: 2014/03/04;
- Sensor-Surface: 2mm (Mechanical Surface Detection)
- Electronics: DAE4 Sn861; Calibrated: 2014/04/23
- Phantom: Twin SAM Phantom_1654; Type: QD000P40;
- Measurement SW: DASY52, Version 52.8 (7); SEMCAD X Version 14.6.10 (7331)

Pin=100mW/Area Scan (91x91x1): Interpolated grid: dx=1.000 mm, dy=1.000 mm
Maximum value of SAR (interpolated) = 14.5 W/kg

Pin=100mW/Zoom Scan (7x7x12)/Cube 0: Measurement grid: dx=4mm, dy=4mm, dz=2mm
Reference Value = 57.27 V/m; Power Drift = 0.05 dB
Peak SAR (extrapolated) = 30.8 W/kg
SAR(1 g) = 7.31 W/kg; SAR(10 g) = 2.04 W/kg
Maximum value of SAR (measured) = 15.6 W/kg

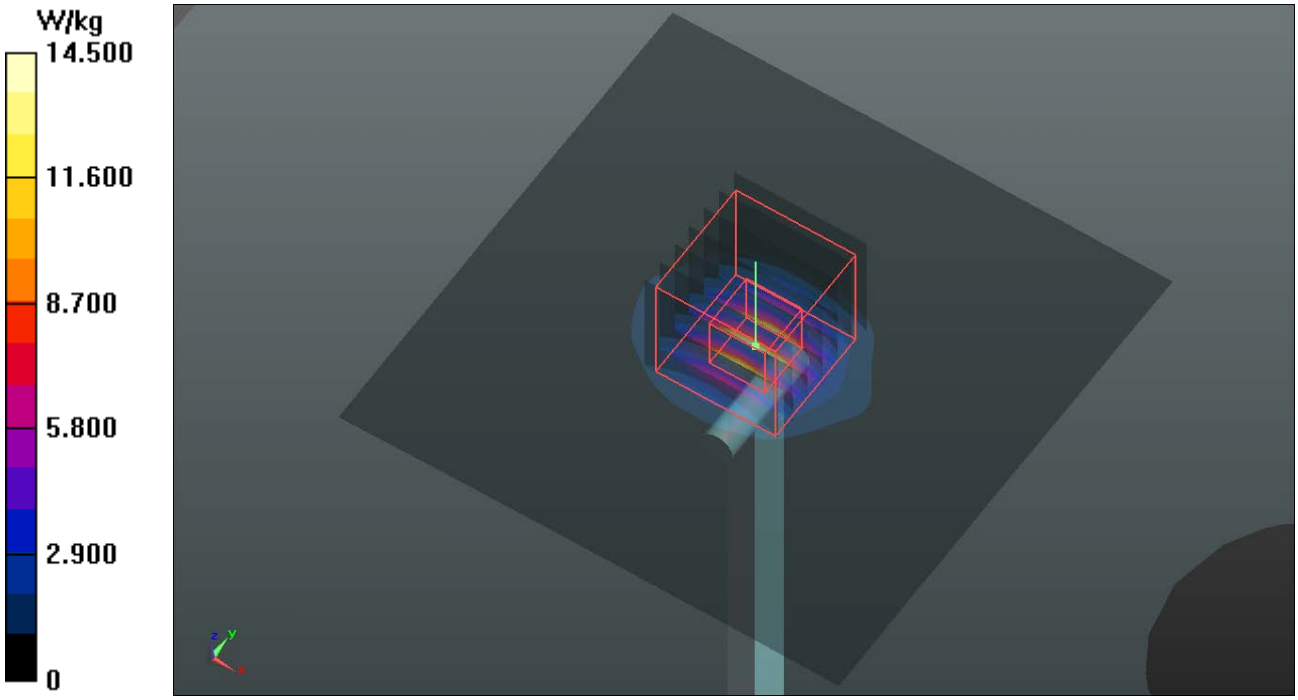

Test Laboratory: Bureau Veritas ADT SAR/HAC Testing Lab Date: 2014/12/08

System Check_B5600_141208

DUT: Dipole 5 GHz; Type: D5GHzV2; SN: 1019

Communication System: CW; Frequency: 5600 MHz;Duty Cycle: 1:1
Medium: B50T60N2_1208 Medium parameters used: f = 5600 MHz; σ = 5.898 S/m; ε_r = 46.563; ρ = 1000 kg/m^3
Ambient Temperature：22.8 ℃； Liquid Temperature：21.7 ℃

DASY5 Configuration:
- Probe: EX3DV4 - SN3590; ConvF(4.62, 4.62, 4.62); Calibrated: 2014/03/04;
- Sensor-Surface: 2mm (Mechanical Surface Detection)
- Electronics: DAE4 Sn861; Calibrated: 2014/04/23
- Phantom: Twin SAM Phantom_1654; Type: QD000P40;
- Measurement SW: DASY52, Version 52.8 (7); SEMCAD X Version 14.6.10 (7331)

Pin=100mW/Area Scan (91x91x1): Interpolated grid: dx=1.000 mm, dy=1.000 mm
Maximum value of SAR (interpolated) = 15.2 W/kg

Pin=100mW/Zoom Scan (7x7x12)/Cube 0: Measurement grid: dx=4mm, dy=4mm, dz=2mm
Reference Value = 55.20 V/m; Power Drift = 0.09 dB
Peak SAR (extrapolated) = 33.9 W/kg
SAR(1 g) = 7.44 W/kg; SAR(10 g) = 2.05 W/kg
Maximum value of SAR (measured) = 16.0 W/kg

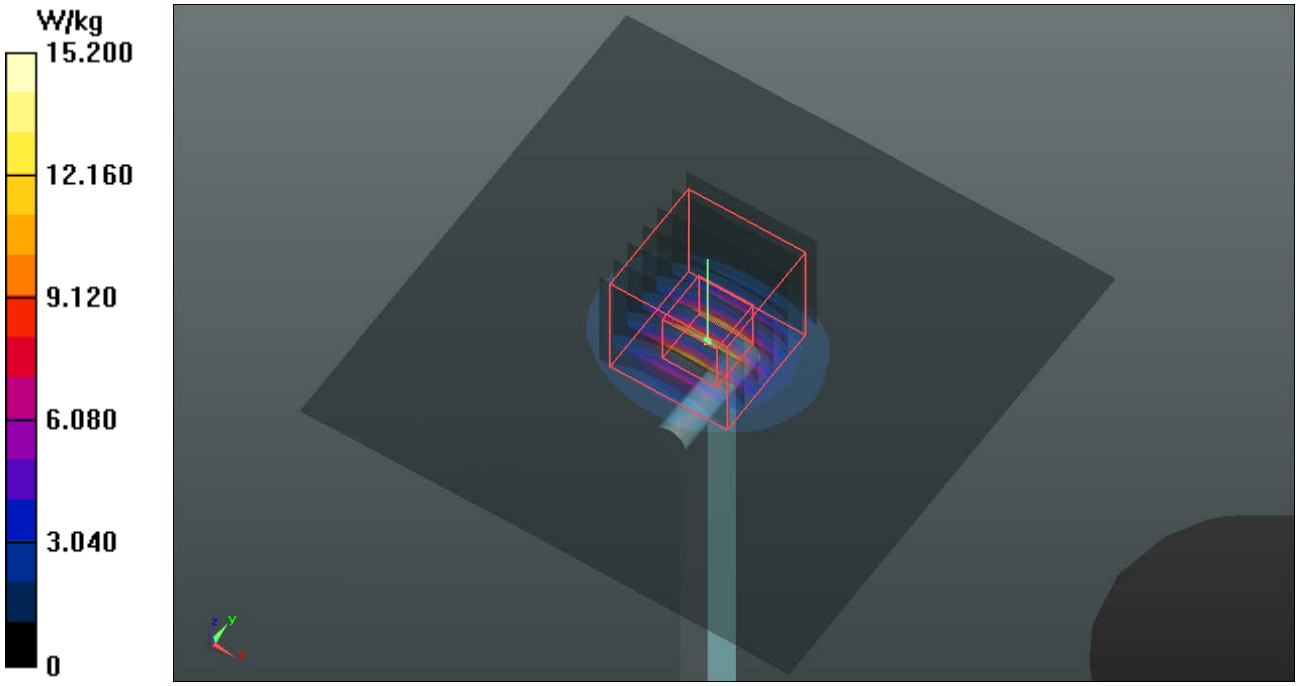

Test Laboratory: Bureau Veritas ADT SAR/HAC Testing Lab Date: 2014/12/08

System Check_B5800_141208

DUT: Dipole 5 GHz; Type: D5GHzV2; SN: 1019

Communication System: CW; Frequency: 5800 MHz;Duty Cycle: 1:1
Medium: B05T06N2_1208 Medium parameters used: f = 5800 MHz; σ = 6.202 S/m; ε_r = 46.48; ρ = 1000 kg/m^3
Ambient Temperature：22.8 ℃; Liquid Temperature：21.7 ℃

DASY5 Configuration:
- Probe: EX3DV4 - SN3590; ConvF(4.74, 4.74, 4.74); Calibrated: 2014/03/04;
- Sensor-Surface: 2mm (Mechanical Surface Detection)
- Electronics: DAE4 Sn861; Calibrated: 2014/04/23
- Phantom: Twin SAM Phantom_1654; Type: QD000P40;
- Measurement SW: DASY52, Version 52.8 (8); SEMCAD X Version 14.6.10 (7331)

Pin=100mW/Area Scan (91x91x1): Interpolated grid: dx=1.000 mm, dy=1.000 mm
Maximum value of SAR (interpolated) = 14.2 W/kg

Pin=100mW/Zoom Scan (7x7x12)/Cube 0: Measurement grid: dx=4mm, dy=4mm, dz=2mm
Reference Value = 52.91 V/m; Power Drift = 0.02 dB
Peak SAR (extrapolated) = 29.4 W/kg
SAR(1 g) = 7 W/kg; SAR(10 g) = 1.97 W/kg
Maximum value of SAR (measured) = 15.1 W/kg

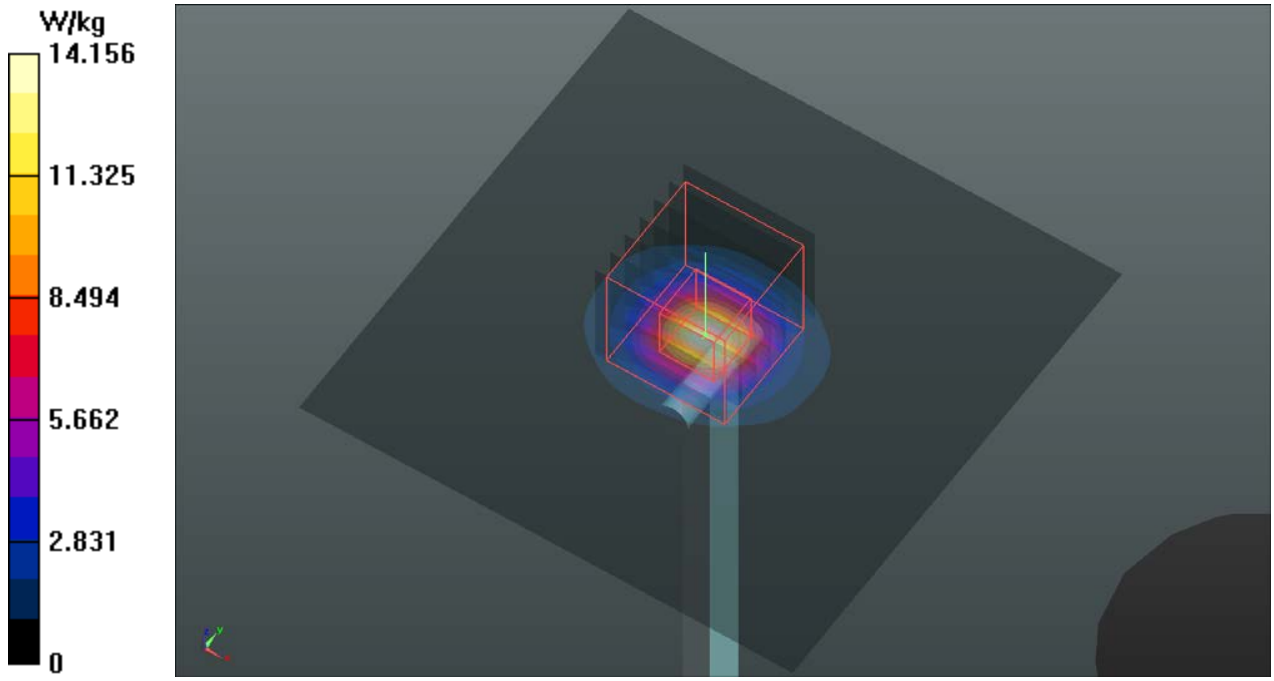

Appendix B. SAR Plots of SAR Measurement

The SAR plots for highest measured SAR in each exposure configuration, wireless mode and frequency band combination, and measured SAR > 1.5 W/kg are shown as follows.

P01 GSM850_GPRS10_Left Cheek_Ch251

DUT: 141027C05

Communication System: GPRS10; Frequency: 848.8 MHz;Duty Cycle: 1:4
Medium: H08T09N3_1122 Medium parameters used: f = 849 MHz; σ = 0.92 S/m; ε_r = 42.362; ρ = 1000 kg/m^3
Ambient Temperature：22.1 ℃ ; Liquid Temperature：21.6 ℃

DASY5 Configuration:
- Probe: EX3DV4 - SN3864; ConvF(10.03, 10.03, 10.03); Calibrated: 2014/07/25;
- Sensor-Surface: 2mm (Mechanical Surface Detection)
- Electronics: DAE3 Sn510; Calibrated: 2014/08/26
- Phantom: Twin SAM Phantom_1653; Type: QD000P40;
- Measurement SW: DASY52, Version 52.8 (8); SEMCAD X Version 14.6.10 (7331)

- Area Scan (61x111x1): Interpolated grid: dx=1.500 mm, dy=1.500 mm
Maximum value of SAR (interpolated) = 0.571 W/kg

- Zoom Scan (5x5x7)/Cube 0: Measurement grid: dx=8mm, dy=8mm, dz=5mm
Reference Value = 7.199 V/m; Power Drift = 0.16 dB
Peak SAR (extrapolated) = 0.652 W/kg
SAR(1 g) = 0.491 W/kg; SAR(10 g) = 0.368 W/kg
Maximum value of SAR (measured) = 0.580 W/kg

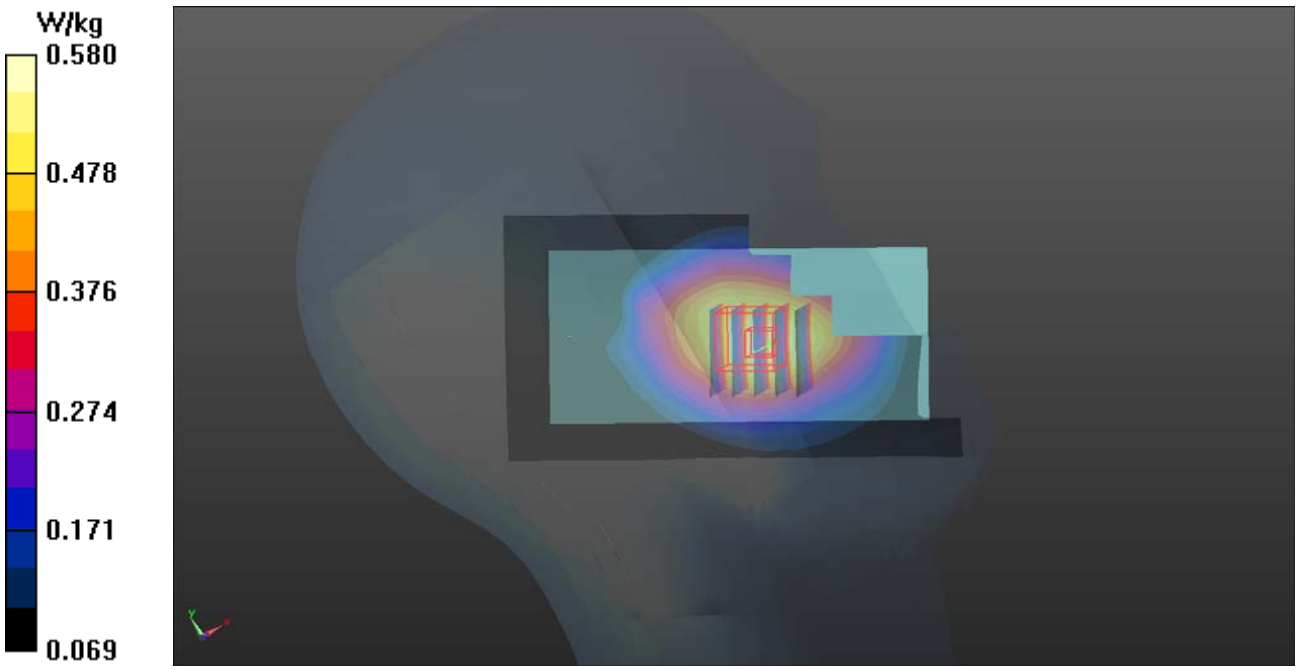

P02 GSM1900_GPRS10_Left Cheek_Ch810

DUT: 141027C05

Communication System: GPRS10; Frequency: 1909.8 MHz;Duty Cycle: 1:4
Medium: H18T19N3_1123 Medium parameters used: f = 1910 MHz; σ = 1.417 S/m; ε_r = 39.637; ρ = 1000 kg/m^3
Ambient Temperature：22.5 ℃ ; Liquid Temperature：21.8 ℃

DASY5 Configuration:
- Probe: EX3DV4 - SN3864; ConvF(8.1, 8.1, 8.1); Calibrated: 2014/07/25;
- Sensor-Surface: 2mm (Mechanical Surface Detection)
- Electronics: DAE3 Sn510; Calibrated: 2014/08/26
- Phantom: Twin SAM Phantom_1653; Type: QD000P40;
- Measurement SW: DASY52, Version 52.8 (8); SEMCAD X Version 14.6.10 (7331)

- Area Scan (61x111x1): Interpolated grid: dx=1.500 mm, dy=1.500 mm
Maximum value of SAR (interpolated) = 0.471 W/kg

- Zoom Scan (5x5x7)/Cube 0: Measurement grid: dx=8mm, dy=8mm, dz=5mm
Reference Value = 7.104 V/m; Power Drift = 0.01 dB
Peak SAR (extrapolated) = 0.534 W/kg
SAR(1 g) = 0.340 W/kg; SAR(10 g) = 0.201 W/kg
Maximum value of SAR (measured) = 0.445 W/kg

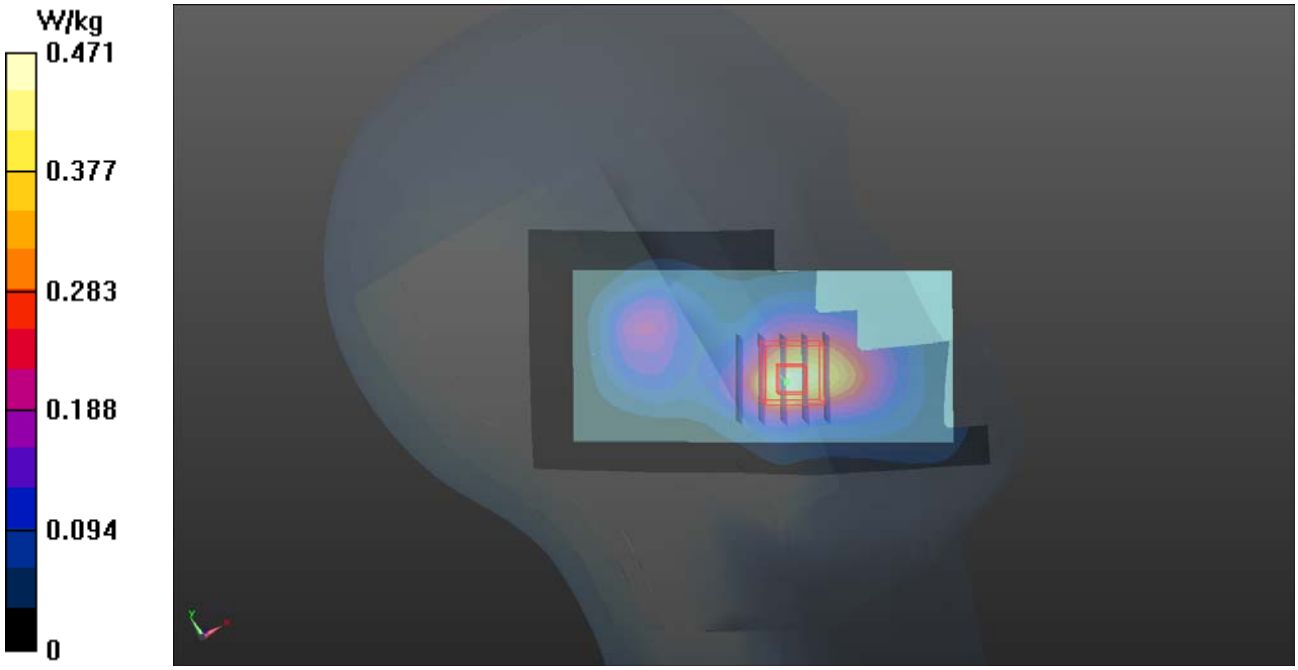

P03 WCDMA II_RMC12.2K_Left Cheek_Ch9400

DUT: 141027C05

Communication System: WCDMA; Frequency: 1880 MHz;Duty Cycle: 1:1
Medium: H18T19N3_1123 Medium parameters used: f = 1880 MHz; σ = 1.376 S/m; ε_r = 39.785; ρ = 1000 kg/m^3
Ambient Temperature：22.5 ℃ ; Liquid Temperature：21.8 ℃

DASY5 Configuration:
- Probe: EX3DV4 - SN3864; ConvF(8.1, 8.1, 8.1); Calibrated: 2014/07/25;
- Sensor-Surface: 2mm (Mechanical Surface Detection)
- Electronics: DAE3 Sn510; Calibrated: 2014/08/26
- Phantom: Twin SAM Phantom_1653; Type: QD000P40;
- Measurement SW: DASY52, Version 52.8 (8); SEMCAD X Version 14.6.10 (7331)

- Area Scan (61x111x1): Interpolated grid: dx=1.500 mm, dy=1.500 mm
Maximum value of SAR (interpolated) = 1.01 W/kg

- Zoom Scan (5x5x7)/Cube 0: Measurement grid: dx=8mm, dy=8mm, dz=5mm
Reference Value = 10.71 V/m; Power Drift = 0.10 dB
Peak SAR (extrapolated) = 1.14 W/kg
SAR(1 g) = 0.720 W/kg; SAR(10 g) = 0.423 W/kg
Maximum value of SAR (measured) = 0.955 W/kg

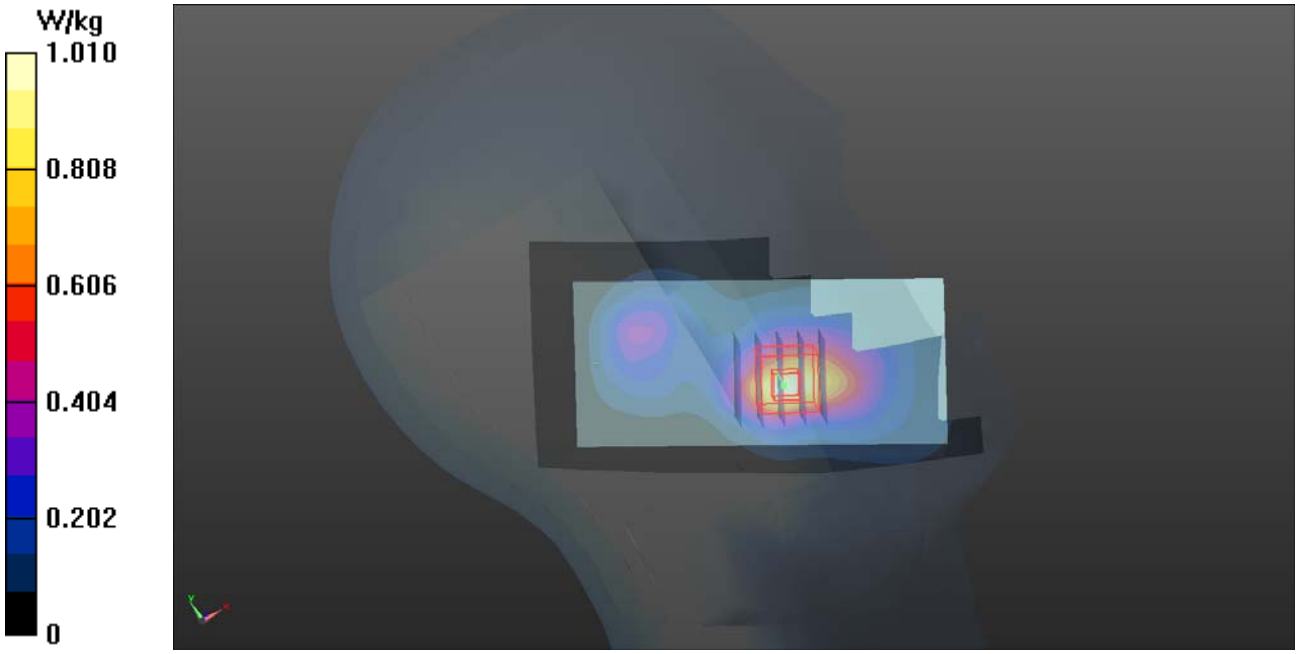

P04 WCDMA V_RMC12.2K_Left Cheek_Ch4182

DUT: 141027C05

Communication System: WCDMA; Frequency: 836.4 MHz;Duty Cycle: 1:1
Medium: H08T09N3_1122 Medium parameters used: f = 836.4 MHz; σ = 0.909 S/m; ε_r = 42.561; ρ = 1000 kg/m^3
Ambient Temperature：22.1 ℃ ; Liquid Temperature：21.6 ℃

DASY5 Configuration:
- Probe: EX3DV4 - SN3864; ConvF(10.03, 10.03, 10.03); Calibrated: 2014/07/25;
- Sensor-Surface: 2mm (Mechanical Surface Detection)
- Electronics: DAE3 Sn510; Calibrated: 2014/08/26
- Phantom: Twin SAM Phantom_1653; Type: QD000P40;
- Measurement SW: DASY52, Version 52.8 (8); SEMCAD X Version 14.6.10 (7331)

- Area Scan (61x111x1): Interpolated grid: dx=1.500 mm, dy=1.500 mm
Maximum value of SAR (interpolated) = 0.588 W/kg

- Zoom Scan (5x5x7)/Cube 0: Measurement grid: dx=8mm, dy=8mm, dz=5mm
Reference Value = 8.197 V/m; Power Drift = 0.00 dB
Peak SAR (extrapolated) = 0.641 W/kg
SAR(1 g) = 0.514 W/kg; SAR(10 g) = 0.401 W/kg
Maximum value of SAR (measured) = 0.578 W/kg

- Zoom Scan (5x5x7)/Cube 1: Measurement grid: dx=8mm, dy=8mm, dz=5mm
Reference Value = 8.197 V/m; Power Drift = 0.00 dB
Peak SAR (extrapolated) = 0.640 W/kg
SAR(1 g) = 0.514 W/kg; SAR(10 g) = 0.392 W/kg
Maximum value of SAR (measured) = 0.577 W/kg

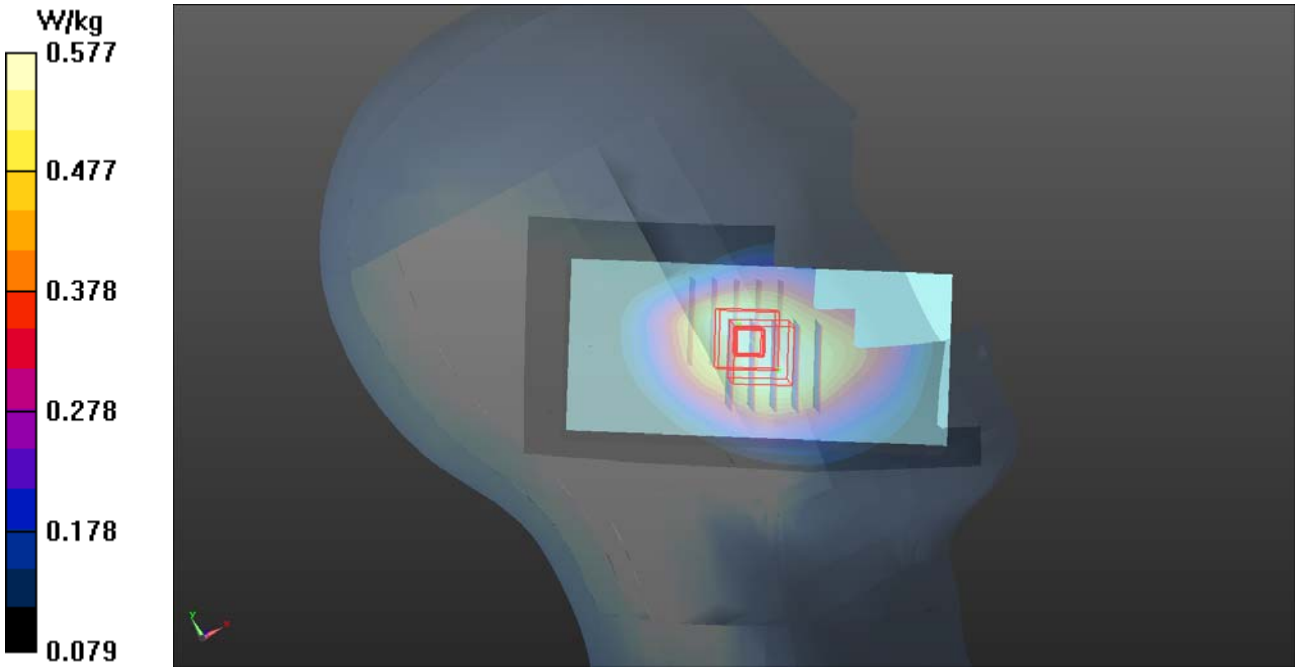

P05 LTE 2_QPSK20M_Left Cheek_Ch18700_1RB_OS0

DUT: 141027C05

Communication System: LTE; Frequency: 1860 MHz;Duty Cycle: 1:1
Medium: H18T19N3_1123 Medium parameters used: f = 1860 MHz; σ = 1.348 S/m; ε_r = 39.903; ρ = 1000 kg/m^3
Ambient Temperature：22.5 ℃ ; Liquid Temperature：21.8 ℃

DASY5 Configuration:
- Probe: EX3DV4 - SN3864; ConvF(8.1, 8.1, 8.1); Calibrated: 2014/07/25;
- Sensor-Surface: 2mm (Mechanical Surface Detection)
- Electronics: DAE3 Sn510; Calibrated: 2014/08/26
- Phantom: Twin SAM Phantom_1653; Type: QD000P40;
- Measurement SW: DASY52, Version 52.8 (8); SEMCAD X Version 14.6.10 (7331)

- Area Scan (61x111x1): Interpolated grid: dx=1.500 mm, dy=1.500 mm
Maximum value of SAR (interpolated) = 1.33 W/kg

- Zoom Scan (5x5x7)/Cube 0: Measurement grid: dx=8mm, dy=8mm, dz=5mm
Reference Value = 11.83 V/m; Power Drift = -0.03 dB
Peak SAR (extrapolated) = 1.47 W/kg
SAR(1 g) = 0.954 W/kg; SAR(10 g) = 0.573 W/kg
Maximum value of SAR (measured) = 1.24 W/kg

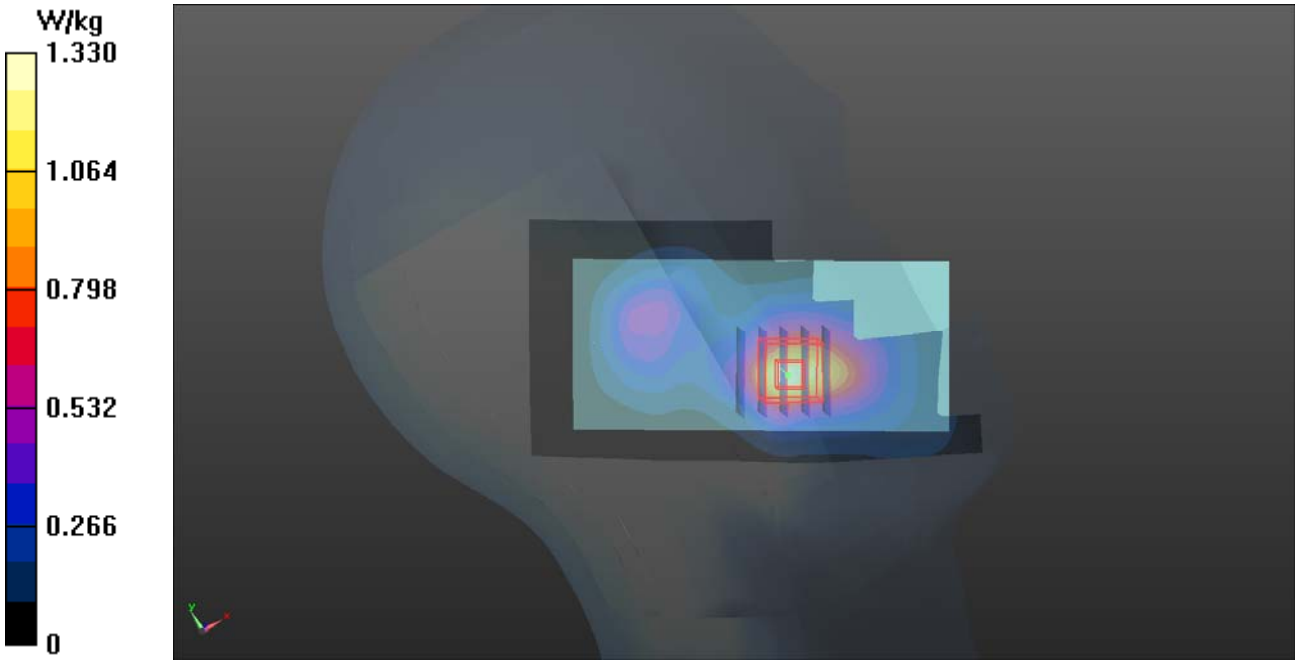

P06 LTE 4_QPSK20M_Left Cheek_Ch20175_1RB_OS0

DUT: 141027C05

Communication System: LTE; Frequency: 1732.5 MHz;Duty Cycle: 1:1
Medium: H17T18N3_1123 Medium parameters used: f = 1732.5 MHz; σ = 1.368 S/m;εr = 41.481; ρ = 1000 kg/m^3
Ambient Temperature：22.3 ℃ ; Liquid Temperature：21.9 ℃

DASY5 Configuration:
- Probe: EX3DV4 - SN3864; ConvF(8.39, 8.39, 8.39); Calibrated: 2014/07/25;
- Sensor-Surface: 2mm (Mechanical Surface Detection)
- Electronics: DAE3 Sn510; Calibrated: 2014/08/26
- Phantom: Twin SAM Phantom_1653; Type: QD000P40;
- Measurement SW: DASY52, Version 52.8 (8); SEMCAD X Version 14.6.10 (7331)

- Area Scan (61x111x1): Interpolated grid: dx=1.500 mm, dy=1.500 mm
Maximum value of SAR (interpolated) = 1.46 W/kg

- Zoom Scan (5x5x7)/Cube 0: Measurement grid: dx=8mm, dy=8mm, dz=5mm
Reference Value = 11.88 V/m; Power Drift = 0.16 dB
Peak SAR (extrapolated) = 1.68 W/kg
SAR(1 g) = 1.12 W/kg; SAR(10 g) = 0.682 W/kg
Maximum value of SAR (measured) = 1.44 W/kg

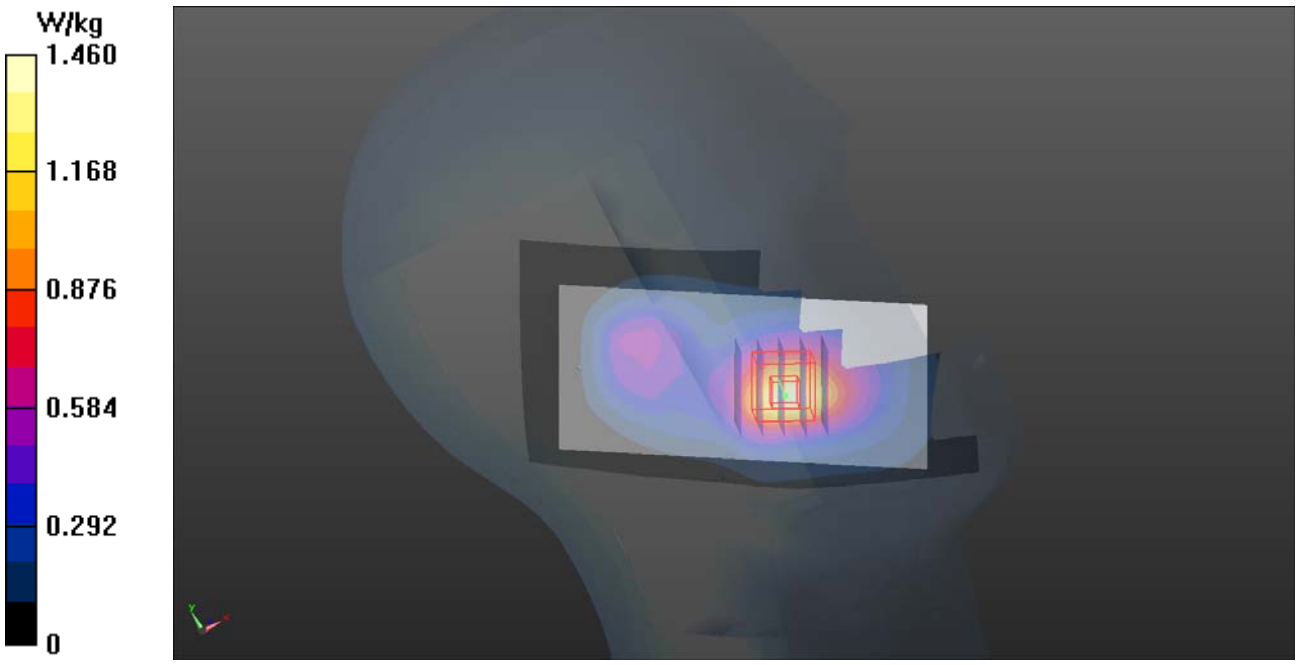

P07 LTE 5_QPSK10M_Left Cheek_Ch20600_1RB_OS0

DUT: 141027C05

Communication System: LTE; Frequency: 844 MHz;Duty Cycle: 1:1
Medium: H08T09N3_1122 Medium parameters used: f = 844 MHz; σ = 0.916 S/m; ε_r = 42.448; ρ = 1000 kg/m^3
Ambient Temperature：22.1 ℃ ; Liquid Temperature：21.6 ℃

DASY5 Configuration:
- Probe: EX3DV4 - SN3864; ConvF(10.03, 10.03, 10.03); Calibrated: 2014/07/25;
- Sensor-Surface: 2mm (Mechanical Surface Detection)
- Electronics: DAE3 Sn510; Calibrated: 2014/08/26
- Phantom: Twin SAM Phantom_1653; Type: QD000P40;
- Measurement SW: DASY52, Version 52.8 (8); SEMCAD X Version 14.6.10 (7331)

- Area Scan (61x111x1): Interpolated grid: dx=1.500 mm, dy=1.500 mm
Maximum value of SAR (interpolated) = 0.957 W/kg

- Zoom Scan (5x5x7)/Cube 0: Measurement grid: dx=8mm, dy=8mm, dz=5mm
Reference Value = 10.93 V/m; Power Drift = -0.01 dB
Peak SAR (extrapolated) = 1.09 W/kg
SAR(1 g) = 0.818 W/kg; SAR(10 g) = 0.607 W/kg
Maximum value of SAR (measured) = 0.957 W/kg

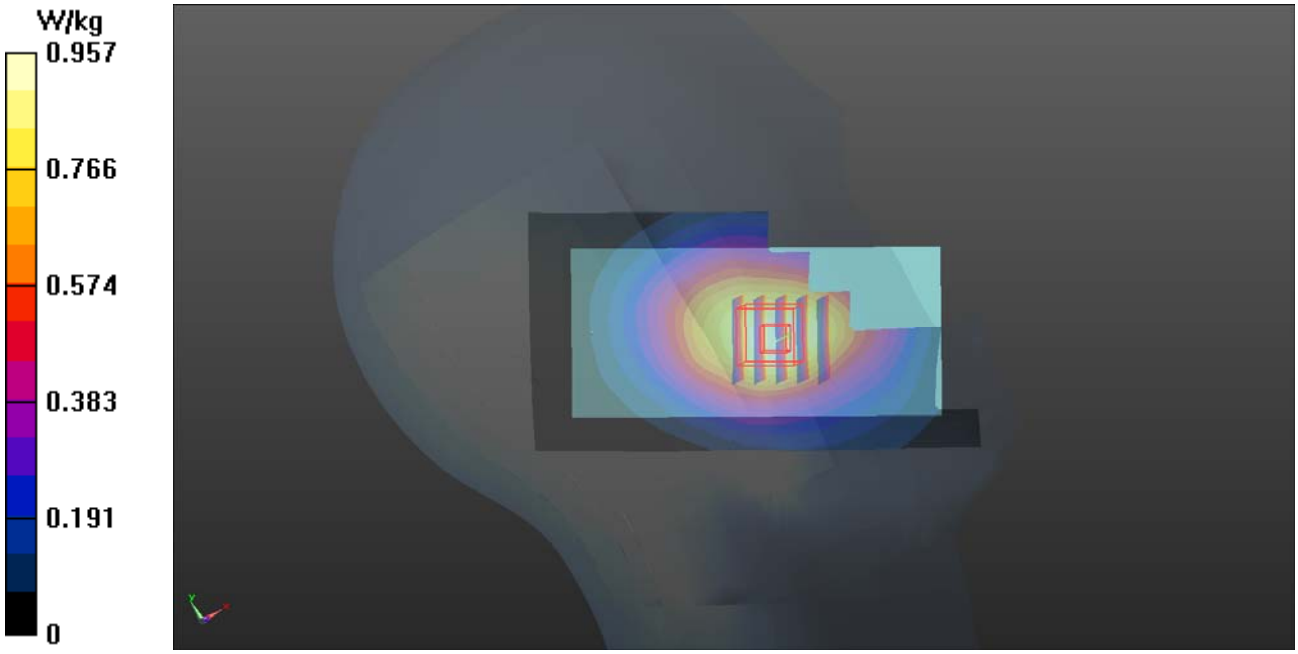

P08 LTE 7_QPSK20M_Right Cheek_Ch21100_1RB_OS0

DUT: 141027C05

Communication System: LTE; Frequency: 2535 MHz;Duty Cycle: 1:1
Medium: H25T27N2_1126 Medium parameters used: f = 2535 MHz; σ = 1.978 S/m; ε_r = 38.261; ρ = 1000 kg/m^3
Ambient Temperature：21.6 ℃； Liquid Temperature：21.5 ℃

DASY5 Configuration:
- Probe: EX3DV4 - SN3650; ConvF(7.01, 7.01, 7.01); Calibrated: 2014/07/28;
- Sensor-Surface: 2mm (Mechanical Surface Detection)
- Electronics: DAE4 Sn1277; Calibrated: 2014/07/22
- Phantom: Twin SAM Phantom_1822; Type: QD000P40;
- Measurement SW: DASY52, Version 52.8 (8); SEMCAD X Version 14.6.10 (7331)

- Area Scan (71x141x1): Interpolated grid: dx=1.200 mm, dy=1.200 mm
Maximum value of SAR (interpolated) = 0.187 W/kg

- Zoom Scan (5x5x7)/Cube 0: Measurement grid: dx=8mm, dy=8mm, dz=5mm
Reference Value = 2.875 V/m; Power Drift = -0.18 dB
Peak SAR (extrapolated) = 0.244 W/kg
SAR(1 g) = 0.133 W/kg; SAR(10 g) = 0.070 W/kg
Maximum value of SAR (measured) = 0.185 W/kg

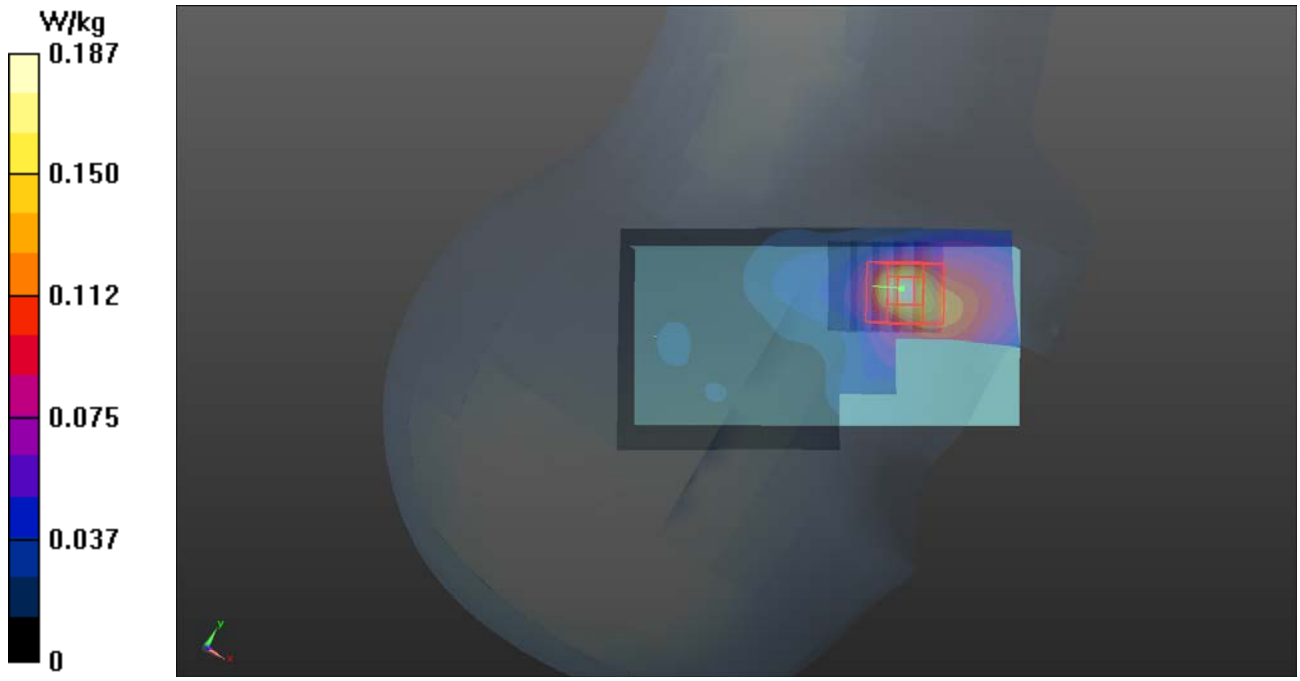

P09 LTE 17_QPSK10M_Left Cheek_Ch23790_1RB_OS0

DUT: 141027C05

Communication System: LTE; Frequency: 710 MHz;Duty Cycle: 1:1
Medium: H07T08N3_1122 Medium parameters used: f = 710 MHz; σ = 0.878 S/m; ε_r = 41.158; ρ = 1000 kg/m^3
Ambient Temperature：22.2 ℃ ; Liquid Temperature：21.8 ℃

DASY5 Configuration:
- Probe: EX3DV4 - SN3864; ConvF(10.44, 10.44, 10.44); Calibrated: 2014/07/25;
- Sensor-Surface: 2mm (Mechanical Surface Detection)
- Electronics: DAE3 Sn510; Calibrated: 2014/08/26
- Phantom: Twin SAM Phantom_1653; Type: QD000P40;
- Measurement SW: DASY52, Version 52.8 (8); SEMCAD X Version 14.6.10 (7331)

- Area Scan (61x111x1): Interpolated grid: dx=1.500 mm, dy=1.500 mm
Maximum value of SAR (interpolated) = 0.452 W/kg

- Zoom Scan (5x5x7)/Cube 0: Measurement grid: dx=8mm, dy=8mm, dz=5mm
Reference Value = 6.597 V/m; Power Drift = 0.05 dB
Peak SAR (extrapolated) = 0.493 W/kg
SAR(1 g) = 0.392 W/kg; SAR(10 g) = 0.306 W/kg
Maximum value of SAR (measured) = 0.446 W/kg

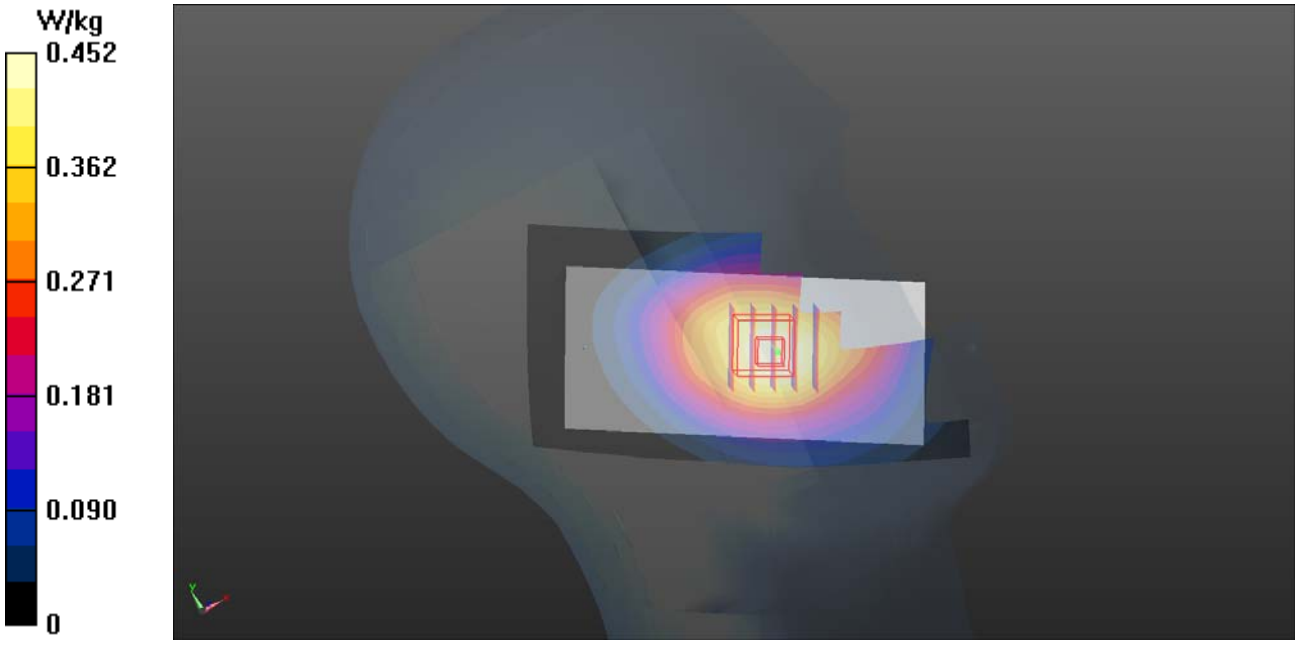

P10 802.11b_Left Cheek_Ch1

DUT: 141027C05

Communication System: WLAN_2.4G; Frequency: 2412 MHz;Duty Cycle: 1:1
Medium: H24T25N1_1205 Medium parameters used: f = 2412 MHz; σ = 1.769 S/m; ε_r = 40.05; ρ = 1000 kg/m^3
Ambient Temperature：22.0 ℃； Liquid Temperature：21.5 ℃

DASY5 Configuration:
- Probe: EX3DV4 - SN3590; ConvF(7.95, 7.95, 7.95); Calibrated: 2014/03/04;
- Sensor-Surface: 2mm (Mechanical Surface Detection)
- Electronics: DAE4 Sn861; Calibrated: 2014/04/23
- Phantom: Twin SAM Phantom_1654; Type: QD000P40;
- Measurement SW: DASY52, Version 52.8 (7); SEMCAD X Version 14.6.10 (7331)

- Area Scan (71x151x1): Interpolated grid: dx=1.200 mm, dy=1.200 mm
Maximum value of SAR (interpolated) = 0.537 W/kg

- Zoom Scan (5x5x7)/Cube 0: Measurement grid: dx=8mm, dy=8mm, dz=5mm
Reference Value = 11.46 V/m; Power Drift = 0.16 dB
Peak SAR (extrapolated) = 0.612 W/kg
SAR(1 g) = 0.312 W/kg; SAR(10 g) = 0.164 W/kg
Maximum value of SAR (measured) = 0.442 W/kg

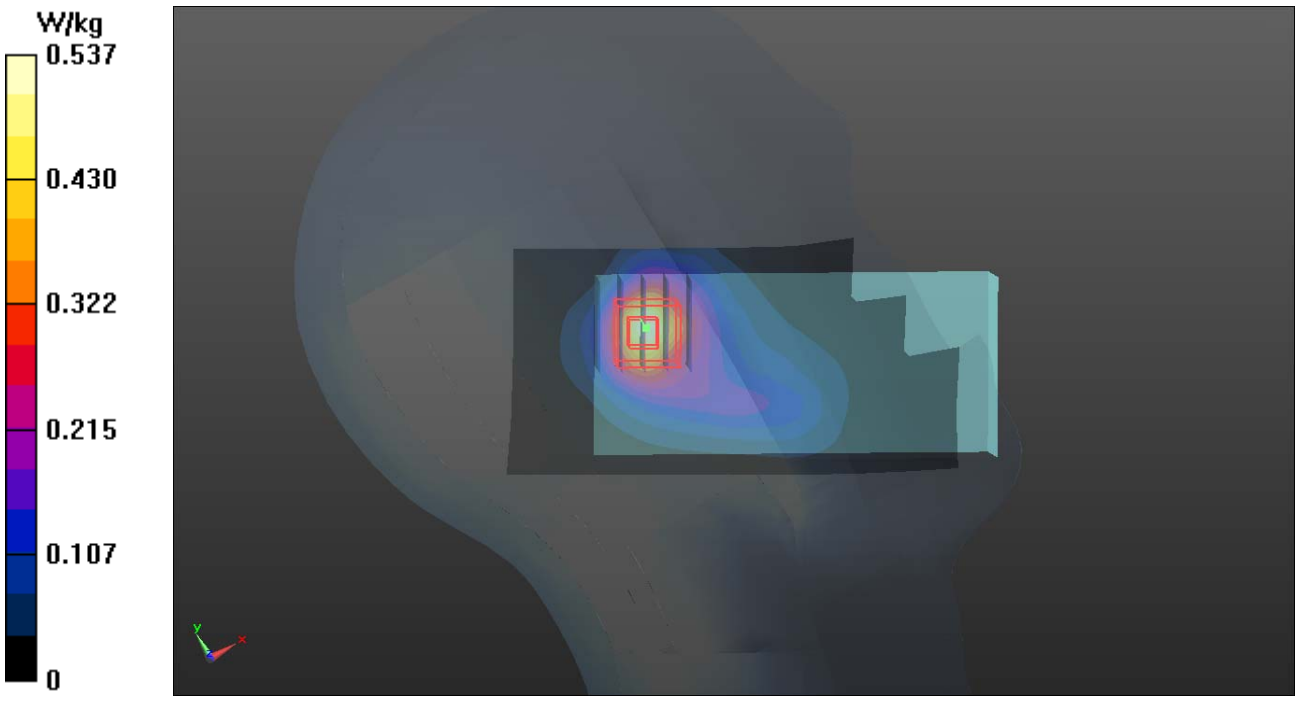

P11 802.11a_Right Cheek_Ch48

DUT: 141027C05

Communication System: WLAN_5G; Frequency: 5240 MHz;Duty Cycle: 1:1.11
Medium: H50T60N3_1205 Medium parameters used: f = 5240 MHz; σ = 4.826 S/m; ε_r = 34.983; ρ = 1000 kg/m^3
Ambient Temperature：22.5 ℃; Liquid Temperature：21.7 ℃

DASY5 Configuration:
- Probe: EX3DV4 - SN3590; ConvF(5.57, 5.57, 5.57); Calibrated: 2014/03/04;
- Sensor-Surface: 2mm (Mechanical Surface Detection)
- Electronics: DAE4 Sn861; Calibrated: 2014/04/23
- Phantom: Twin SAM Phantom_1202; Type: QD000P40;
- Measurement SW: DASY52, Version 52.8 (7); SEMCAD X Version 14.6.10 (7331)

- Area Scan (81x181x1): Interpolated grid: dx=1.000 mm, dy=1.000 mm
Maximum value of SAR (interpolated) = 0.213 W/kg

- Zoom Scan (6x6x12)/Cube 0: Measurement grid: dx=5mm, dy=5mm, dz=2mm
Reference Value = 3.507 V/m; Power Drift = 0.16 dB
Peak SAR (extrapolated) = 0.581 W/kg
SAR(1 g) = 0.168 W/kg; SAR(10 g) = 0.053 W/kg
Maximum value of SAR (measured) = 0.309 W/kg

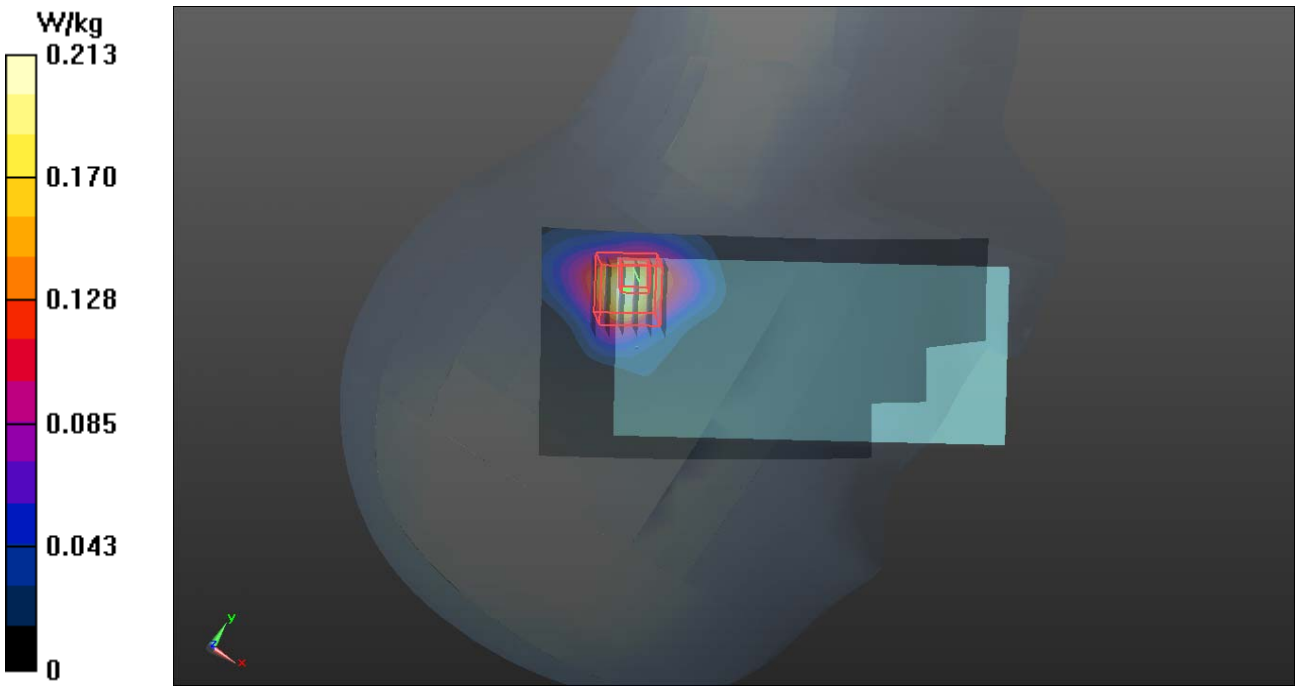

P12 802.11a_Left Cheek_Ch64

DUT: 141027C05

Communication System: WLAN_5G; Frequency: 5320 MHz;Duty Cycle: 1:1.11
Medium: H50T60N3_1205 Medium parameters used: f = 5320 MHz; σ = 4.903 S/m; ε_r = 34.792;ρ = 1000 kg/m^3
Ambient Temperature：22.5 ℃； Liquid Temperature：21.7 ℃

DASY5 Configuration:
- Probe: EX3DV4 - SN3590; ConvF(5.33, 5.33, 5.33); Calibrated: 2014/03/04;
- Sensor-Surface: 2mm (Mechanical Surface Detection)
- Electronics: DAE4 Sn861; Calibrated: 2014/04/23
- Phantom: Twin SAM Phantom_1202; Type: QD000P40;
- Measurement SW: DASY52, Version 52.8 (7); SEMCAD X Version 14.6.10 (7331)

- Area Scan (81x181x1): Interpolated grid: dx=1.000 mm, dy=1.000 mm
Maximum value of SAR (interpolated) = 0.330 W/kg

- Zoom Scan (6x6x12)/Cube 0: Measurement grid: dx=5mm, dy=5mm, dz=2mm
Reference Value = 3.726 V/m; Power Drift = 0.06 dB
Peak SAR (extrapolated) = 0.751 W/kg
SAR(1 g) = 0.194 W/kg; SAR(10 g) = 0.060 W/kg
Maximum value of SAR (measured) = 0.371 W/kg

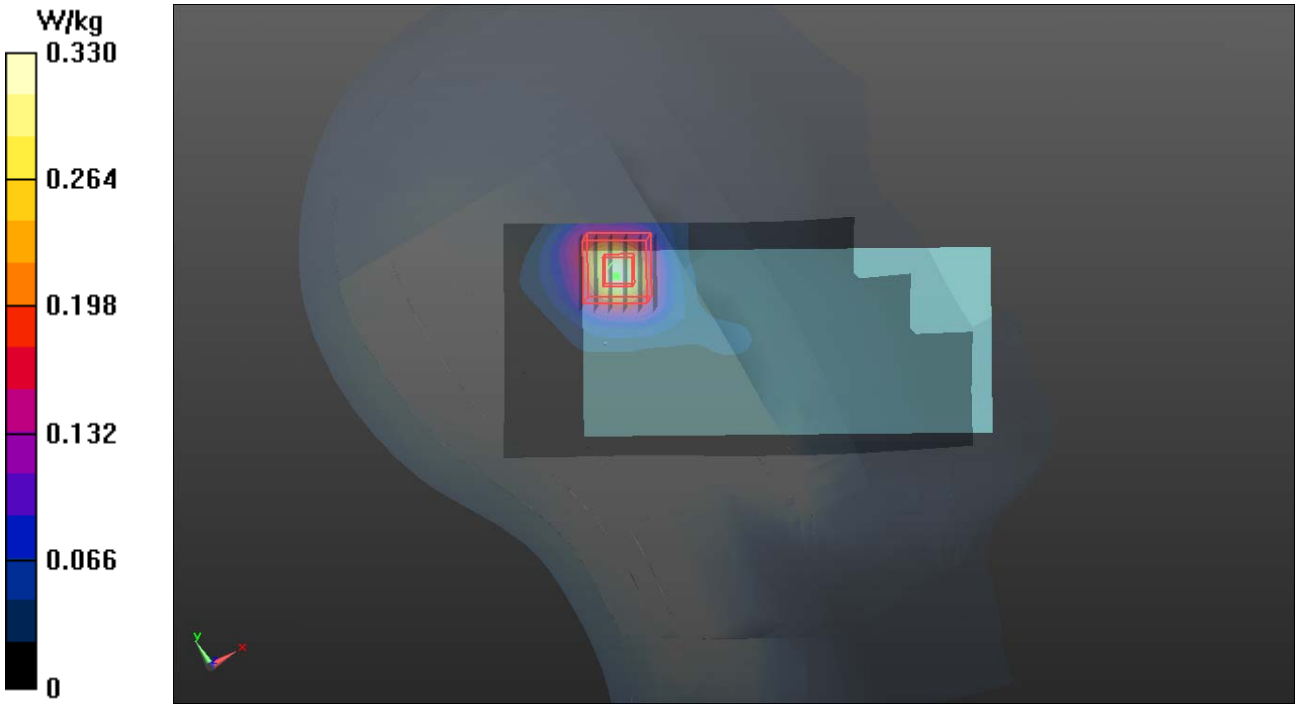

P13 802.11a_Left Cheek_Ch100

DUT: 141027C05

Communication System: WLAN_5G; Frequency: 5500 MHz;Duty Cycle: 1:1.11
Medium: H50T60N3_1205 Medium parameters used: f = 5500 MHz; σ = 5.113 S/m; ε_r = 34.527; ρ = 1000 kg/m^3
Ambient Temperature：22.5 ℃; Liquid Temperature：21.7 ℃

DASY5 Configuration:
- Probe: EX3DV4 - SN3590; ConvF(5.06, 5.06, 5.06); Calibrated: 2014/03/04;
- Sensor-Surface: 2mm (Mechanical Surface Detection)
- Electronics: DAE4 Sn861; Calibrated: 2014/04/23
- Phantom: Twin SAM Phantom_1202; Type: QD000P40;
- Measurement SW: DASY52, Version 52.8 (7); SEMCAD X Version 14.6.10 (7331)

- Area Scan (81x181x1): Interpolated grid: dx=1.000 mm, dy=1.000 mm
Maximum value of SAR (interpolated) = 0.217 W/kg

- Zoom Scan (6x6x12)/Cube 0: Measurement grid: dx=5mm, dy=5mm, dz=2mm
Reference Value = 2.461 V/m; Power Drift = 0.03 dB
Peak SAR (extrapolated) = 0.606 W/kg
SAR(1 g) = 0.106 W/kg; SAR(10 g) = 0.038 W/kg
Maximum value of SAR (measured) = 0.188 W/kg

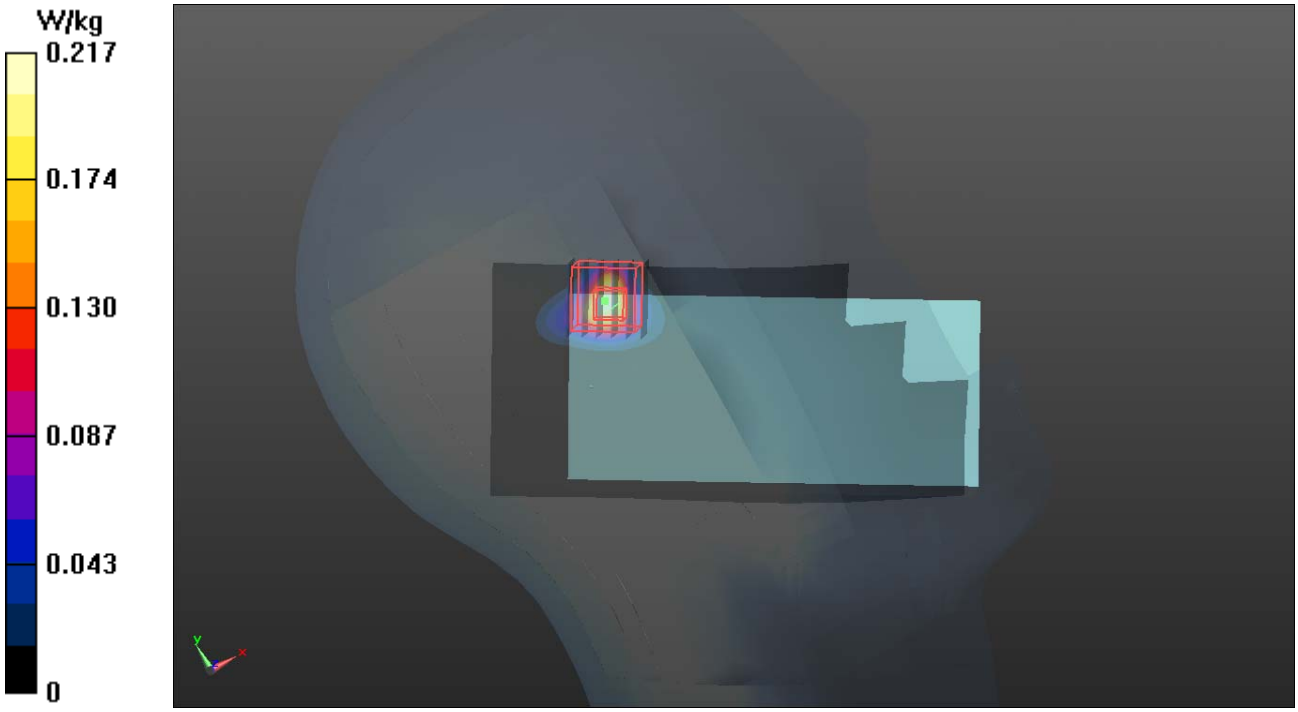

P14 802.11a_Left Cheek_Ch157

DUT: 141027C05

Communication System: WLAN_5G; Frequency: 5785 MHz;Duty Cycle: 1:1.11
Medium: H50T60N3_1205 Medium parameters used: f = 5785 MHz; σ = 5.434 S/m; ε_r = 33.989; ρ = 1000 kg/m^3
Ambient Temperature：22.5 ℃; Liquid Temperature：21.7 ℃

DASY5 Configuration:
- Probe: EX3DV4 - SN3590; ConvF(4.89, 4.89, 4.89); Calibrated: 2014/03/04;
- Sensor-Surface: 2mm (Mechanical Surface Detection)
- Electronics: DAE4 Sn861; Calibrated: 2014/04/23
- Phantom: Twin SAM Phantom_1202; Type: QD000P40;
- Measurement SW: DASY52, Version 52.8 (7); SEMCAD X Version 14.6.10 (7331)

- Area Scan (81x181x1): Interpolated grid: dx=1.000 mm, dy=1.000 mm
Maximum value of SAR (interpolated) = 0.724 W/kg

- Zoom Scan (6x6x12)/Cube 0: Measurement grid: dx=5mm, dy=5mm, dz=2mm
Reference Value = 1.766 V/m; Power Drift = 0.02 dB
Peak SAR (extrapolated) = 1.54 W/kg
SAR(1 g) = 0.421 W/kg; SAR(10 g) = 0.159 W/kg
Maximum value of SAR (measured) = 0.768 W/kg

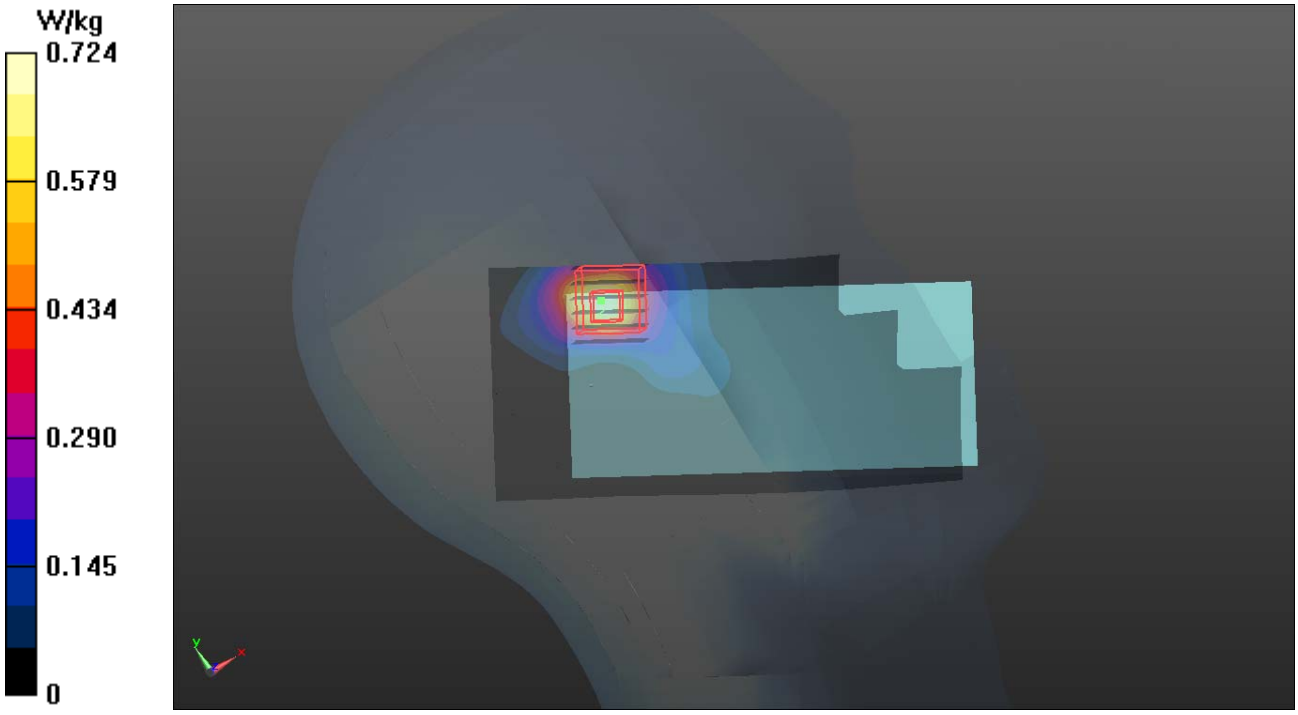

Test Laboratory: Bureau Veritas ADT SAR/HAC Testing Lab Date: 2014/11/25

P15 GSM850_GPRS10_Front Face_1cm_Ch251

DUT: 141027C05

Communication System: GPRS10; Frequency: 848.8 MHz;Duty Cycle: 1:4
Medium: B08T09N3_1125 Medium parameters used: f = 849 MHz; σ = 0.973 S/m; ε_r = 55.8; ρ = 1000 kg/m^3
Ambient Temperature：21.9 ℃； Liquid Temperature：21.5 ℃

DASY5 Configuration:
- Probe: EX3DV4 - SN3650; ConvF(9.7, 9.7, 9.7); Calibrated: 2014/07/28;
- Sensor-Surface: 2mm (Mechanical Surface Detection)
- Electronics: DAE4 Sn1277; Calibrated: 2014/07/22
- Phantom: Twin SAM Phantom_1485; Type: QD000P40;
- Measurement SW: DASY52, Version 52.8 (8); SEMCAD X Version 14.6.10 (7331)

- Area Scan (61x111x1): Interpolated grid: dx=1.500 mm, dy=1.500 mm
Maximum value of SAR (interpolated) = 0.607 W/kg

- Zoom Scan (5x5x7)/Cube 0: Measurement grid: dx=8mm, dy=8mm, dz=5mm
Reference Value = 25.26 V/m; Power Drift = -0.03 dB
Peak SAR (extrapolated) = 0.654 W/kg
SAR(1 g) = 0.517 W/kg; SAR(10 g) = 0.392 W/kg
Maximum value of SAR (measured) = 0.593 W/kg

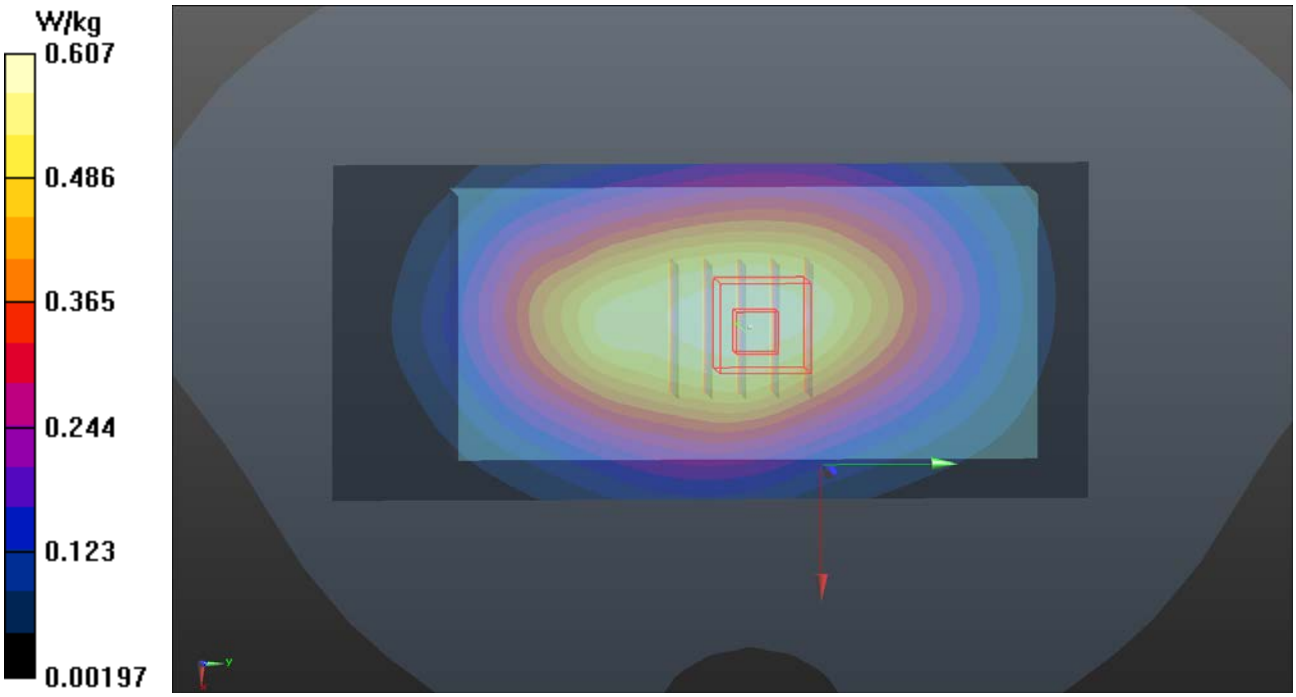

P16 GSM1900_GPRS10_Front Face_1cm_Ch810

DUT: 141027C05

Communication System: GPRS10; Frequency: 1909.8 MHz;Duty Cycle: 1:4
Medium: B18T19N3_1125 Medium parameters used: f = 1910 MHz; σ = 1.565 S/m; ε_r = 53.371; ρ = 1000 kg/m^3
Ambient Temperature：21.8 ℃; Liquid Temperature：21.4 ℃

DASY5 Configuration:
- Probe: EX3DV4 - SN3650; ConvF(7.41, 7.41, 7.41); Calibrated: 2014/07/28;
- Sensor-Surface: 2mm (Mechanical Surface Detection)
- Electronics: DAE4 Sn1277; Calibrated: 2014/07/22
- Phantom: Twin SAM Phantom_1485; Type: QD000P40;
- Measurement SW: DASY52, Version 52.8 (8); SEMCAD X Version 14.6.10 (7331)

- Area Scan (61x121x1): Interpolated grid: dx=1.500 mm, dy=1.500 mm
Maximum value of SAR (interpolated) = 0.429 W/kg

- Zoom Scan (5x5x7)/Cube 0: Measurement grid: dx=8mm, dy=8mm, dz=5mm
Reference Value = 9.479 V/m; Power Drift = 0.09 dB
Peak SAR (extrapolated) = 0.468 W/kg
SAR(1 g) = 0.308 W/kg; SAR(10 g) = 0.191 W/kg
Maximum value of SAR (measured) = 0.393 W/kg

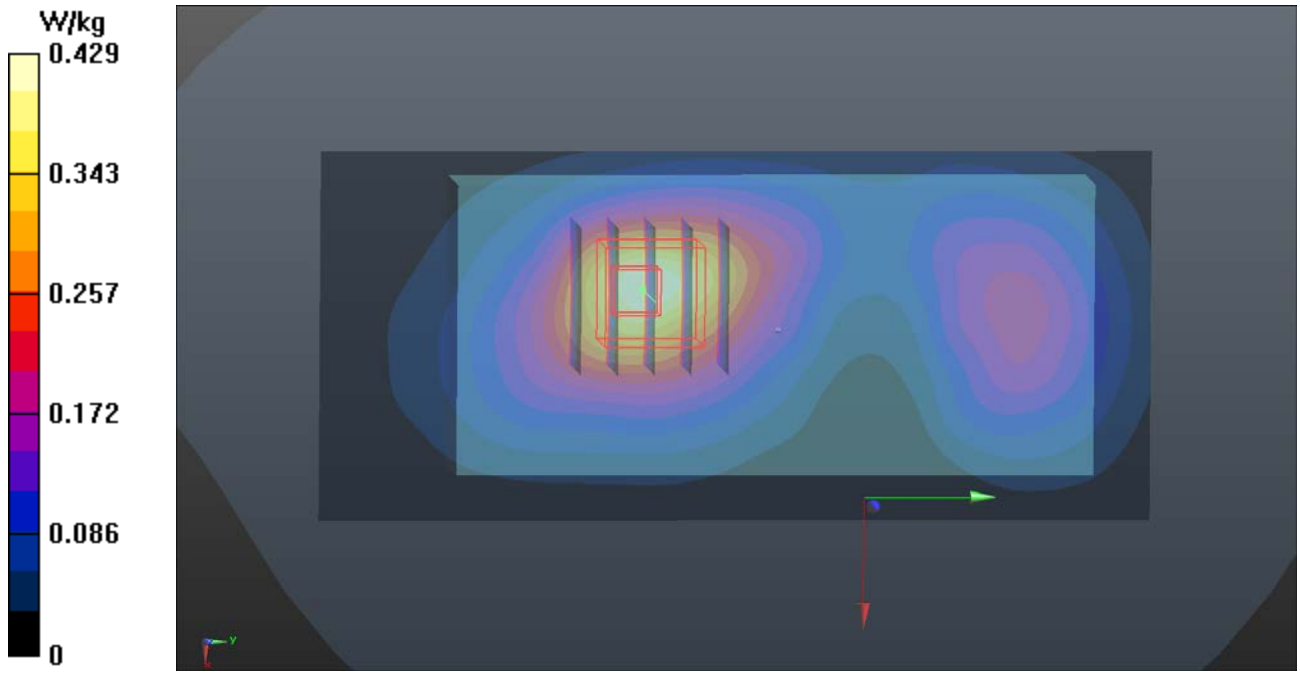

Test Laboratory: Bureau Veritas ADT SAR/HAC Testing Lab Date: 2014/11/25

P17 WCDMA II_RMC12.2K_Front Face_1cm_Ch9400

DUT: 141027C05

Communication System: WCDMA; Frequency: 1880 MHz;Duty Cycle: 1:1
Medium: B18T19N3_1125 Medium parameters used: f = 1880 MHz; σ = 1.527 S/m; ε_r = 53.432; ρ = 1000 kg/m^3
Ambient Temperature：21.8 ℃; Liquid Temperature：21.4 ℃

DASY5 Configuration:
- Probe: EX3DV4 - SN3650; ConvF(7.41, 7.41, 7.41); Calibrated: 2014/07/28;
- Sensor-Surface: 2mm (Mechanical Surface Detection)
- Electronics: DAE4 Sn1277; Calibrated: 2014/07/22
- Phantom: Twin SAM Phantom_1485; Type: QD000P40;
- Measurement SW: DASY52, Version 52.8 (8); SEMCAD X Version 14.6.10 (7331)

- Area Scan (61x111x1): Interpolated grid: dx=1.500 mm, dy=1.500 mm
Maximum value of SAR (interpolated) = 0.806 W/kg

- Zoom Scan (5x5x7)/Cube 0: Measurement grid: dx=8mm, dy=8mm, dz=5mm
Reference Value = 11.10 V/m; Power Drift = 0.01 dB
Peak SAR (extrapolated) = 0.836 W/kg
SAR(1 g) = 0.556 W/kg; SAR(10 g) = 0.348 W/kg
Maximum value of SAR (measured) = 0.702 W/kg

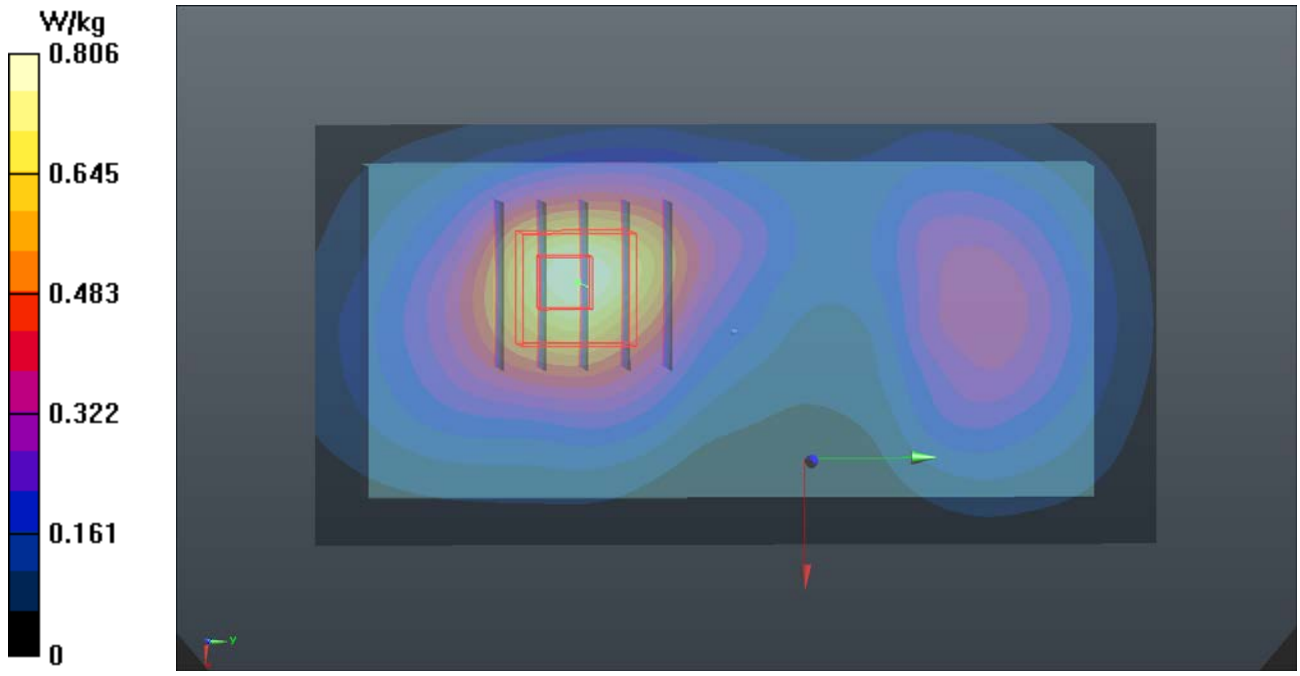

Test Laboratory: Bureau Veritas ADT SAR/HAC Testing Lab Date: 2014/11/25

P18 WCDMA V_RMC12.2K_Front Face_1cm_Ch4182

DUT: 141027C05

Communication System: WCDMA; Frequency: 836.4 MHz;Duty Cycle: 1:1
Medium: B08T09N3_1125 Medium parameters used: f = 836.4 MHz; σ = 0.957 S/m; ε_r = 55.931; ρ = 1000 kg/m^3
Ambient Temperature：21.9 ℃； Liquid Temperature：21.5 ℃

DASY5 Configuration:
- Probe: EX3DV4 - SN3650; ConvF(9.7, 9.7, 9.7); Calibrated: 2014/07/28;
- Sensor-Surface: 2mm (Mechanical Surface Detection)
- Electronics: DAE4 Sn1277; Calibrated: 2014/07/22
- Phantom: Twin SAM Phantom_1485; Type: QD000P40;
- Measurement SW: DASY52, Version 52.8 (8); SEMCAD X Version 14.6.10 (7331)

- Area Scan (61x121x1): Interpolated grid: dx=1.500 mm, dy=1.500 mm
Maximum value of SAR (interpolated) = 0.664 W/kg

- Zoom Scan (5x5x7)/Cube 0: Measurement grid: dx=8mm, dy=8mm, dz=5mm
Reference Value = 26.44 V/m; Power Drift = 0.01 dB
Peak SAR (extrapolated) = 0.717 W/kg
SAR(1 g) = 0.570 W/kg; SAR(10 g) = 0.426 W/kg
Maximum value of SAR (measured) = 0.650 W/kg

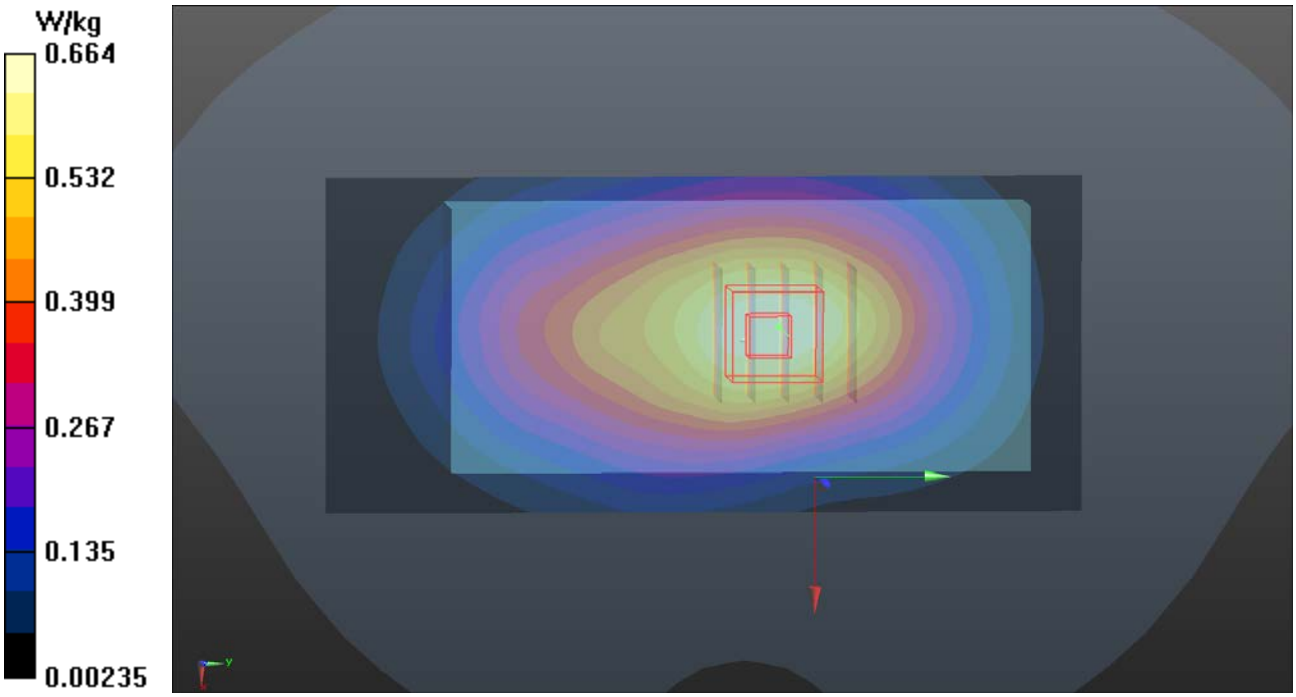

Test Laboratory: Bureau Veritas ADT SAR/HAC Testing Lab Date: 2014/11/24

P19 LTE 2_QPSK20M_Rear Face_1cm_Ch19100_1RB_OS0

DUT: 141027C05

Communication System: LTE; Frequency: 1900 MHz;Duty Cycle: 1:1
Medium: B18T19N3_1124 Medium parameters used: f = 1900 MHz; σ = 1.558 S/m; ε_r = 55.468; ρ = 1000 kg/m^3
Ambient Temperature：21.7 ℃; Liquid Temperature：21.3 ℃

DASY5 Configuration:
- Probe: EX3DV4 - SN3650; ConvF(7.41, 7.41, 7.41); Calibrated: 2014/07/28;
- Sensor-Surface: 2mm (Mechanical Surface Detection)
- Electronics: DAE4 Sn1277; Calibrated: 2014/07/22
- Phantom: Twin SAM Phantom_1822; Type: QD000P40;
- Measurement SW: DASY52, Version 52.8 (8); SEMCAD X Version 14.6.10 (7331)

- Area Scan (61x121x1): Interpolated grid: dx=1.500 mm, dy=1.500 mm
Maximum value of SAR (interpolated) = 0.865 W/kg

- Zoom Scan (5x5x7)/Cube 0: Measurement grid: dx=8mm, dy=8mm, dz=5mm
Reference Value = 18.67 V/m; Power Drift = -0.17 dB
Peak SAR (extrapolated) = 1.02 W/kg
SAR(1 g) = 0.685 W/kg; SAR(10 g) = 0.434 W/kg
Maximum value of SAR (measured) = 0.868 W/kg

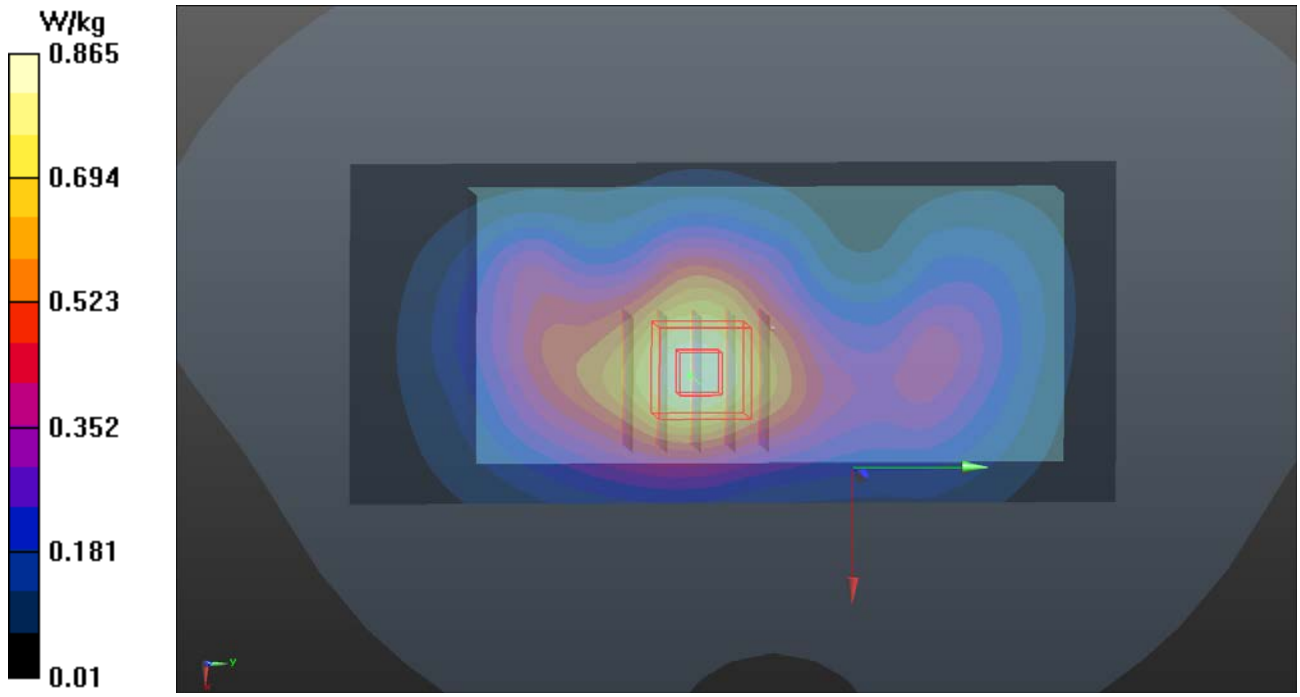

Test Laboratory: Bureau Veritas ADT SAR/HAC Testing Lab Date: 2014/11/24

P20 LTE 4_QPSK20M_Front Face_1cm_Ch20300_1RB_OS0

DUT: 141027C05

Communication System: LTE; Frequency: 1745 MHz;Duty Cycle: 1:1
Medium: B17T18N3_1124 Medium parameters used: f = 1745 MHz; σ = 1.479 S/m; ε_r = 52.118; ρ = 1000 kg/m^3
Ambient Temperature：21.6 ℃; Liquid Temperature：21.3 ℃

DASY5 Configuration:
- Probe: EX3DV4 - SN3650; ConvF(7.78, 7.78, 7.78); Calibrated: 2014/07/28;
- Sensor-Surface: 2mm (Mechanical Surface Detection)
- Electronics: DAE4 Sn1277; Calibrated: 2014/07/22
- Phantom: Twin SAM Phantom_1822; Type: QD000P40;
- Measurement SW: DASY52, Version 52.8 (8); SEMCAD X Version 14.6.10 (7331)

- Area Scan (61x121x1): Interpolated grid: dx=1.500 mm, dy=1.500 mm
Maximum value of SAR (interpolated) = 1.54 W/kg

- Zoom Scan (5x5x7)/Cube 0: Measurement grid: dx=8mm, dy=8mm, dz=5mm
Reference Value = 13.46 V/m; Power Drift = 0.10 dB
Peak SAR (extrapolated) = 1.61 W/kg
SAR(1 g) = 1.13 W/kg; SAR(10 g) = 0.719 W/kg
Maximum value of SAR (measured) = 1.37 W/kg

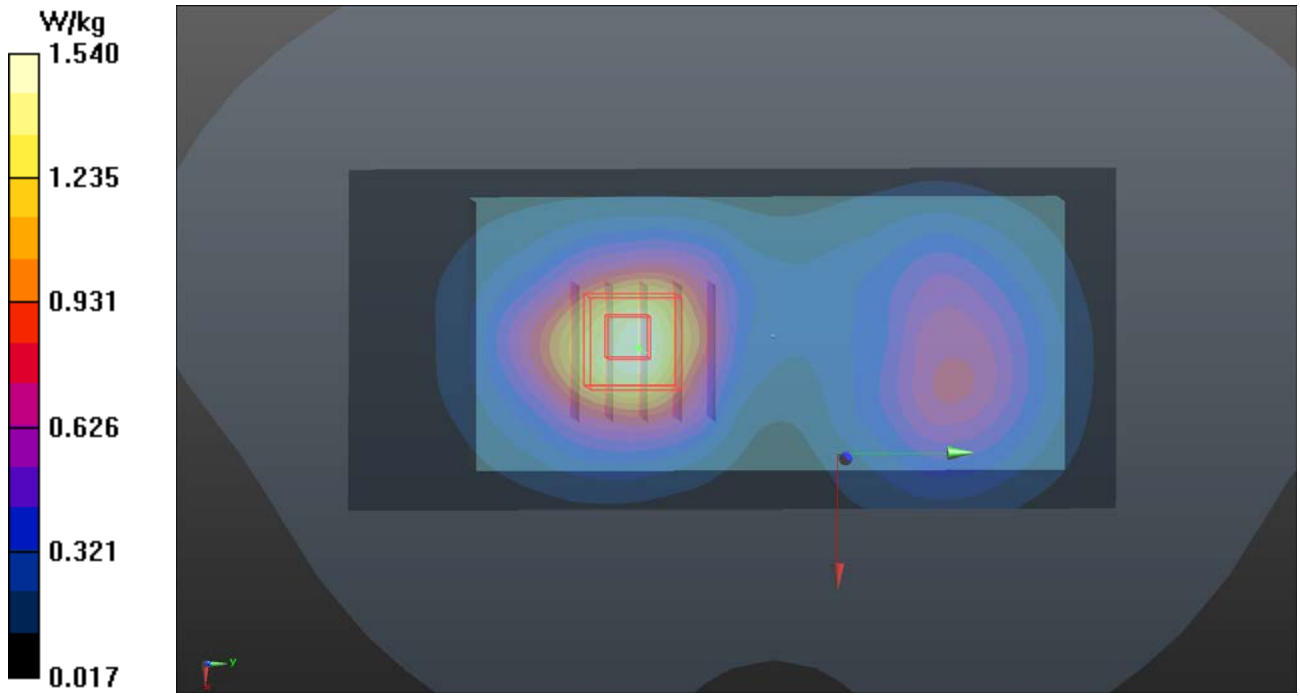

Test Laboratory: Bureau Veritas ADT SAR/HAC Testing Lab Date: 2014/11/25

P21 LTE 5_QPSK10M_Front Face_1cm_Ch20525_1RB_OS0

DUT: 141027C05

Communication System: LTE; Frequency: 836.5 MHz;Duty Cycle: 1:1
Medium: B08T09N3_1125 Medium parameters used: f = 836.5 MHz; σ = 0.957 S/m; ε_r = 55.93; ρ = 1000 kg/m^3
Ambient Temperature：21.9 ℃； Liquid Temperature：21.5 ℃

DASY5 Configuration:
- Probe: EX3DV4 - SN3650; ConvF(9.7, 9.7, 9.7); Calibrated: 2014/07/28;
- Sensor-Surface: 2mm (Mechanical Surface Detection)
- Electronics: DAE4 Sn1277; Calibrated: 2014/07/22
- Phantom: Twin SAM Phantom_1485; Type: QD000P40;
- Measurement SW: DASY52, Version 52.8 (8); SEMCAD X Version 14.6.10 (7331)

- Area Scan (61x121x1): Interpolated grid: dx=1.500 mm, dy=1.500 mm
Maximum value of SAR (interpolated) = 0.924 W/kg

- Zoom Scan (5x5x7)/Cube 0: Measurement grid: dx=8mm, dy=8mm, dz=5mm
Reference Value = 30.53 V/m; Power Drift = 0.00 dB
Peak SAR (extrapolated) = 1.01 W/kg
SAR(1 g) = 0.784 W/kg; SAR(10 g) = 0.590 W/kg
Maximum value of SAR (measured) = 0.913 W/kg

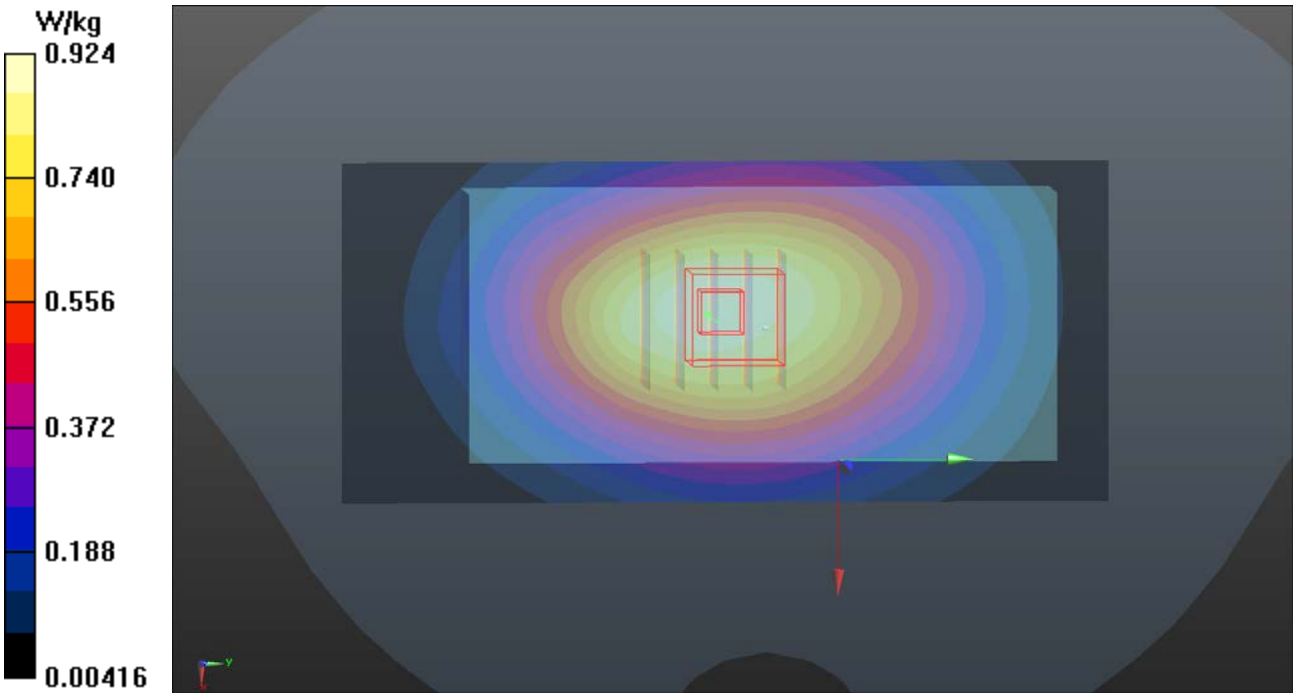

Test Laboratory: Bureau Veritas ADT SAR/HAC Testing Lab Date: 2014/11/24

P22 LTE 7_QPSK20M_Rear Face_1cm_Ch21100_1RB_OS0

DUT: 141027C05

Communication System: LTE; Frequency: 2535 MHz;Duty Cycle: 1:1
Medium: B25T27N1_1124 Medium parameters used: f = 2535 MHz; σ = 2.09 S/m; ε_r = 52.286; ρ = 1000 kg/m^3
Ambient Temperature：21.5 ℃; Liquid Temperature：21.3 ℃

DASY5 Configuration:
- Probe: EX3DV4 - SN3650; ConvF(6.69, 6.69, 6.69); Calibrated: 2014/07/28;
- Sensor-Surface: 2mm (Mechanical Surface Detection)
- Electronics: DAE4 Sn1277; Calibrated: 2014/07/22
- Phantom: Twin SAM Phantom_1485; Type: QD000P40;
- Measurement SW: DASY52, Version 52.8 (8); SEMCAD X Version 14.6.10 (7331)

- Area Scan (71x151x1): Interpolated grid: dx=1.200 mm, dy=1.200 mm
Maximum value of SAR (interpolated) = 0.609 W/kg

- Zoom Scan (5x5x7)/Cube 0: Measurement grid: dx=8mm, dy=8mm, dz=5mm
Reference Value = 2.476 V/m; Power Drift = 0.09 dB
Peak SAR (extrapolated) = 0.785 W/kg
SAR(1 g) = 0.431 W/kg; SAR(10 g) = 0.234 W/kg
Maximum value of SAR (measured) = 0.603 W/kg

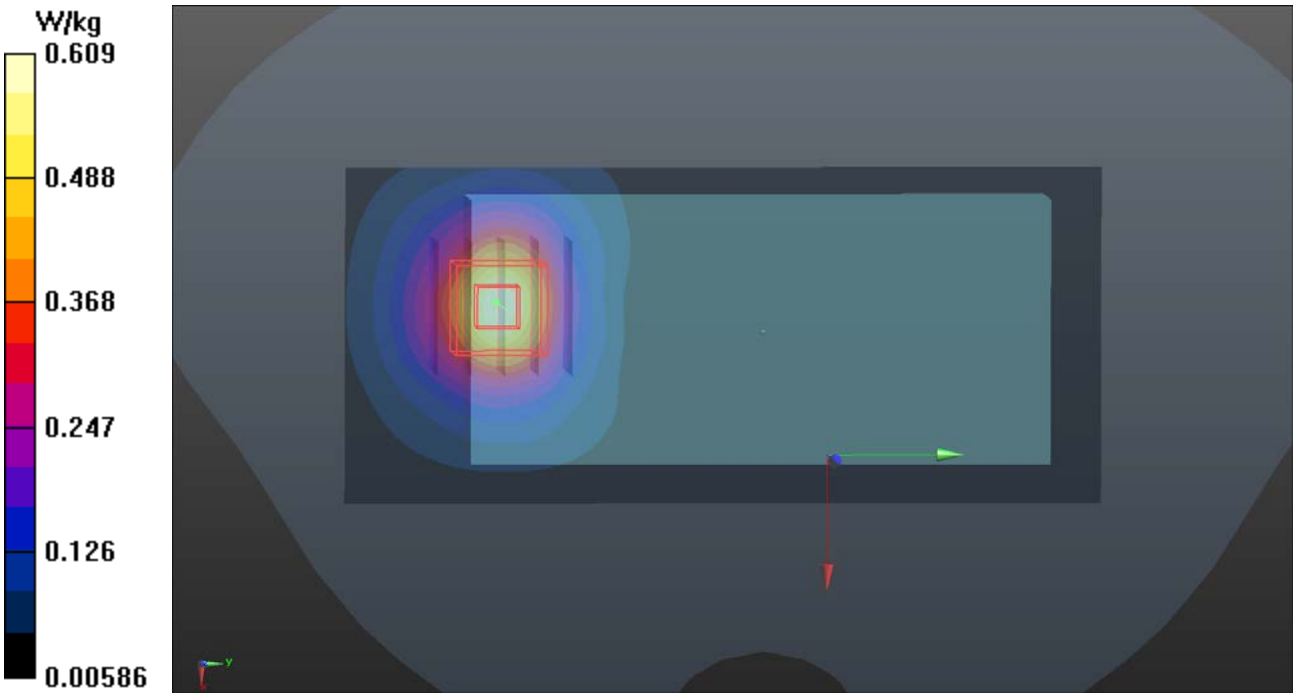

P23 LTE 17_QPSK10M_Rear Face_1cm_Ch23790_1RB_OS0

DUT: 141027C05

Communication System: LTE; Frequency: 710 MHz;Duty Cycle: 1:1
Medium: B07T08N3_1125 Medium parameters used: f = 710 MHz; σ = 0.932 S/m; ε_r = 55.507; ρ = 1000 kg/m^3
Ambient Temperature：21.9 ℃； Liquid Temperature：21.5 ℃

DASY5 Configuration:
- Probe: EX3DV4 - SN3650; ConvF(9.62, 9.62, 9.62); Calibrated: 2014/07/28;
- Sensor-Surface: 2mm (Mechanical Surface Detection)
- Electronics: DAE4 Sn1277; Calibrated: 2014/07/22
- Phantom: Twin SAM Phantom_1485; Type: QD000P40;
- Measurement SW: DASY52, Version 52.8 (8); SEMCAD X Version 14.6.10 (7331)

- Area Scan (61x121x1): Interpolated grid: dx=1.500 mm, dy=1.500 mm
Maximum value of SAR (interpolated) = 0.681 W/kg

- Zoom Scan (5x5x7)/Cube 0: Measurement grid: dx=8mm, dy=8mm, dz=5mm
Reference Value = 26.18 V/m; Power Drift = 0.04 dB
Peak SAR (extrapolated) = 0.738 W/kg
SAR(1 g) = 0.594 W/kg; SAR(10 g) = 0.453 W/kg
Maximum value of SAR (measured) = 0.679 W/kg

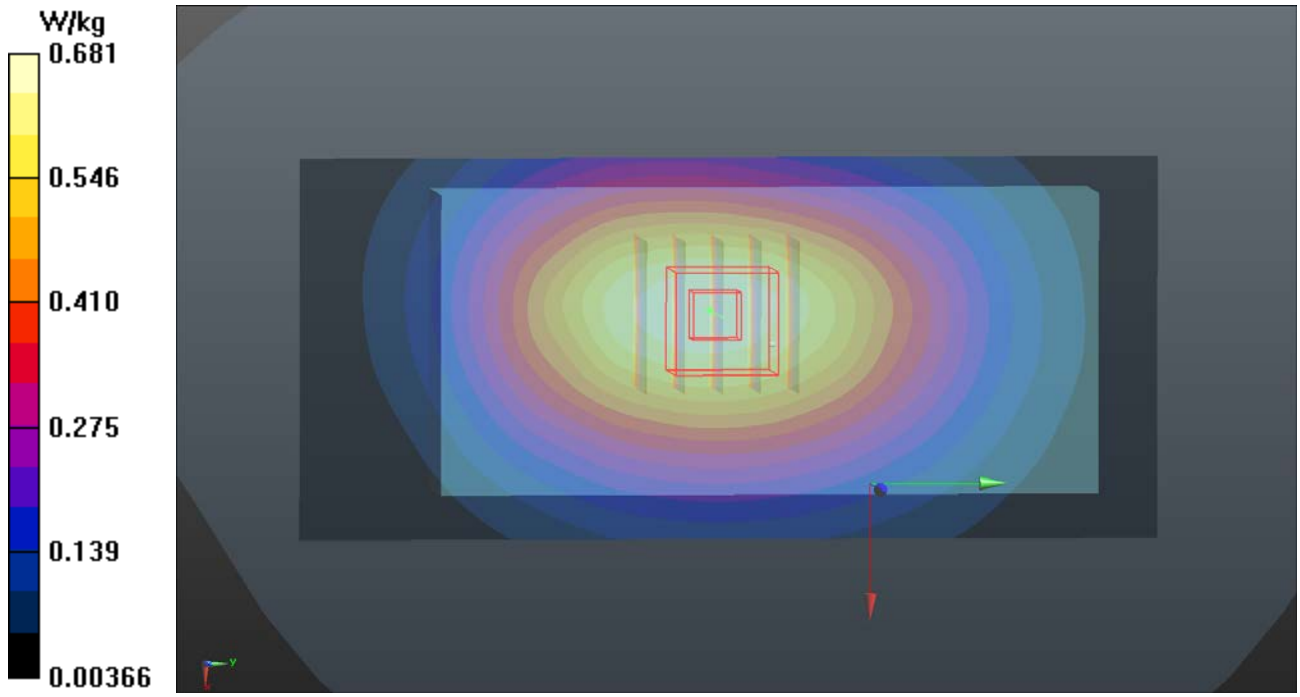

P24 802.11b_Front Face_1cm_Ch1

DUT: 141027C05

Communication System: 802.11b; Frequency: 2412 MHz;Duty Cycle: 1:1
Medium: B24T25N1_1205 Medium parameters used: f = 2412 MHz; σ = 1.923 S/m; ε_r = 51.517; ρ = 1000 kg/m^3
Ambient Temperature：22.5 ℃; Liquid Temperature：21.7 ℃

DASY5 Configuration:
- Probe: EX3DV4 - SN3590; ConvF(7.72, 7.72, 7.72); Calibrated: 2014/03/04;
- Sensor-Surface: 2mm (Mechanical Surface Detection)
- Electronics: DAE4 Sn861; Calibrated: 2014/04/23
- Phantom: Twin SAM Phantom_1654; Type: QD000P40;
- Measurement SW: DASY52, Version 52.8 (7); SEMCAD X Version 14.6.10 (7331)

- Area Scan (91x151x1): Interpolated grid: dx=1.200 mm, dy=1.200 mm
Maximum value of SAR (interpolated) = 0.0487 W/kg

- Zoom Scan (5x5x7)/Cube 0: Measurement grid: dx=8mm, dy=8mm, dz=5mm
Reference Value = 4.873 V/m; Power Drift = -0.09 dB
Peak SAR (extrapolated) = 0.0620 W/kg
SAR(1 g) = 0.034 W/kg; SAR(10 g) = 0.018 W/kg
Maximum value of SAR (measured) = 0.0457 W/kg

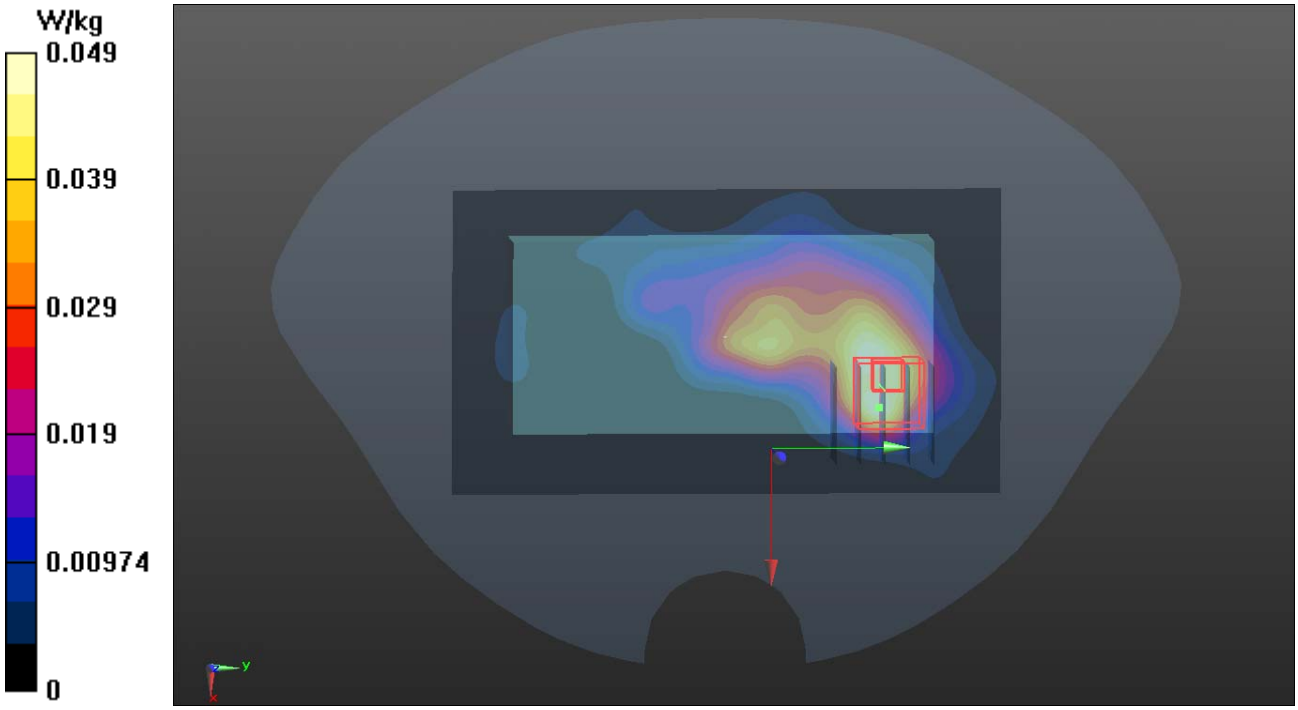

P25 802.11a_Rear Face_1cm_Ch48

DUT: 141027C05

Communication System: WLAN_5G; Frequency: 5240 MHz;Duty Cycle: 1:1.11
Medium: B50T60N2_1208 Medium parameters used: f = 5240 MHz; σ = 5.404 S/m; ε_r = 47.237; ρ = 1000 kg/m^3
Ambient Temperature：22.8 ℃; Liquid Temperature：21.7 ℃

DASY5 Configuration:
- Probe: EX3DV4 - SN3590; ConvF(5.16, 5.16, 5.16); Calibrated: 2014/03/04;
- Sensor-Surface: 2mm (Mechanical Surface Detection)
- Electronics: DAE4 Sn861; Calibrated: 2014/04/23
- Phantom: Twin SAM Phantom_1654; Type: QD000P40;
- Measurement SW: DASY52, Version 52.8 (7); SEMCAD X Version 14.6.10 (7331)

- Area Scan (101x181x1): Interpolated grid: dx=1.000 mm, dy=1.000 mm
Maximum value of SAR (interpolated) = 0.0912 W/kg

- Zoom Scan (6x6x12)/Cube 0: Measurement grid: dx=5mm, dy=5mm, dz=2mm
Reference Value = 2.146 V/m; Power Drift = 0.16 dB
Peak SAR (extrapolated) = 0.128 W/kg
SAR(1 g) = 0.032 W/kg; SAR(10 g) = 0.016 W/kg
Maximum value of SAR (measured) = 0.0573 W/kg

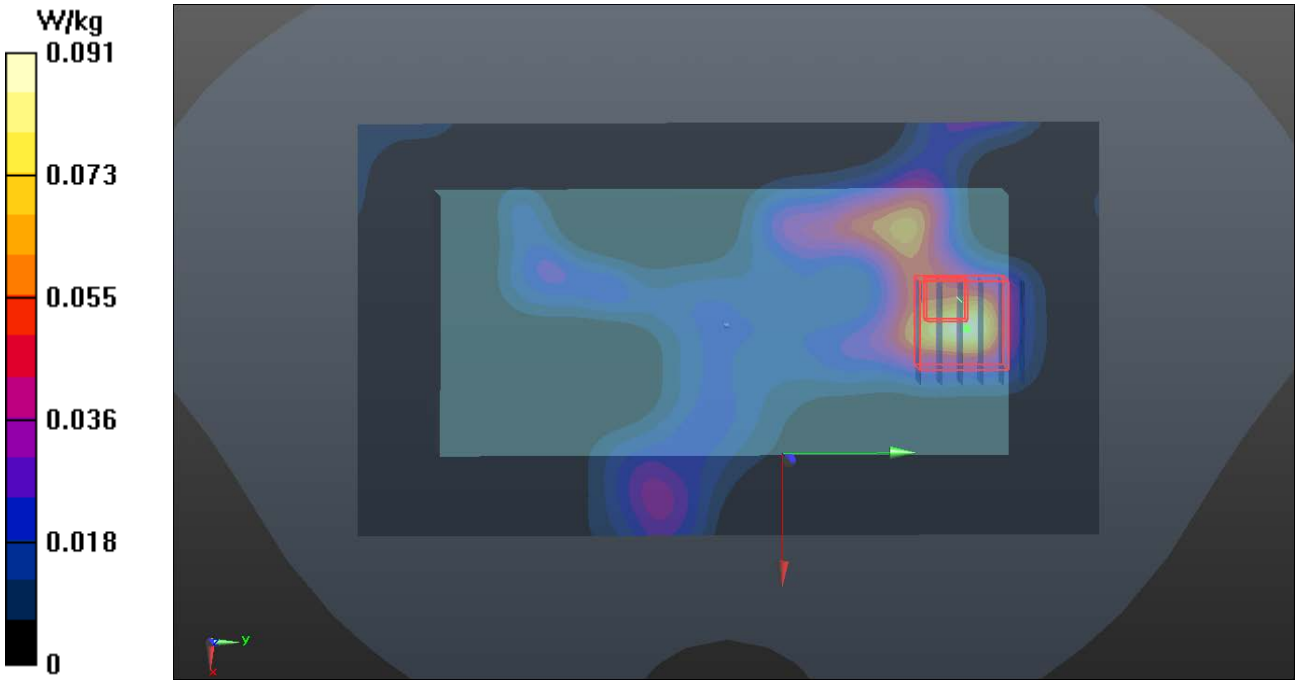

P26 802.11a_Rear Face_1cm_Ch64

DUT: 141027C05

Communication System: WLAN_5G; Frequency: 5320 MHz;Duty Cycle: 1:1.11
Medium: B50T60N2_1208 Medium parameters used: f = 5320 MHz; σ = 5.502 S/m; ε_r = 47.029; ρ = 1000 kg/m^3
Ambient Temperature：22.8 ℃; Liquid Temperature：21.7 ℃

DASY5 Configuration:
- Probe: EX3DV4 - SN3590; ConvF(4.92, 4.92, 4.92); Calibrated: 2014/03/04;
- Sensor-Surface: 2mm (Mechanical Surface Detection)
- Electronics: DAE4 Sn861; Calibrated: 2014/04/23
- Phantom: Twin SAM Phantom_1654; Type: QD000P40;
- Measurement SW: DASY52, Version 52.8 (7); SEMCAD X Version 14.6.10 (7331)

- Area Scan (101x181x1): Interpolated grid: dx=1.000 mm, dy=1.000 mm
Maximum value of SAR (interpolated) = 0.0454 W/kg

- Zoom Scan (6x6x12)/Cube 0: Measurement grid: dx=5mm, dy=5mm, dz=2mm
Reference Value = 1.360 V/m; Power Drift = 0.10 dB
Peak SAR (extrapolated) = 0.186 W/kg
SAR(1 g) = 0.024 W/kg; SAR(10 g) = 0.011 W/kg
Maximum value of SAR (measured) = 0.0406 W/kg

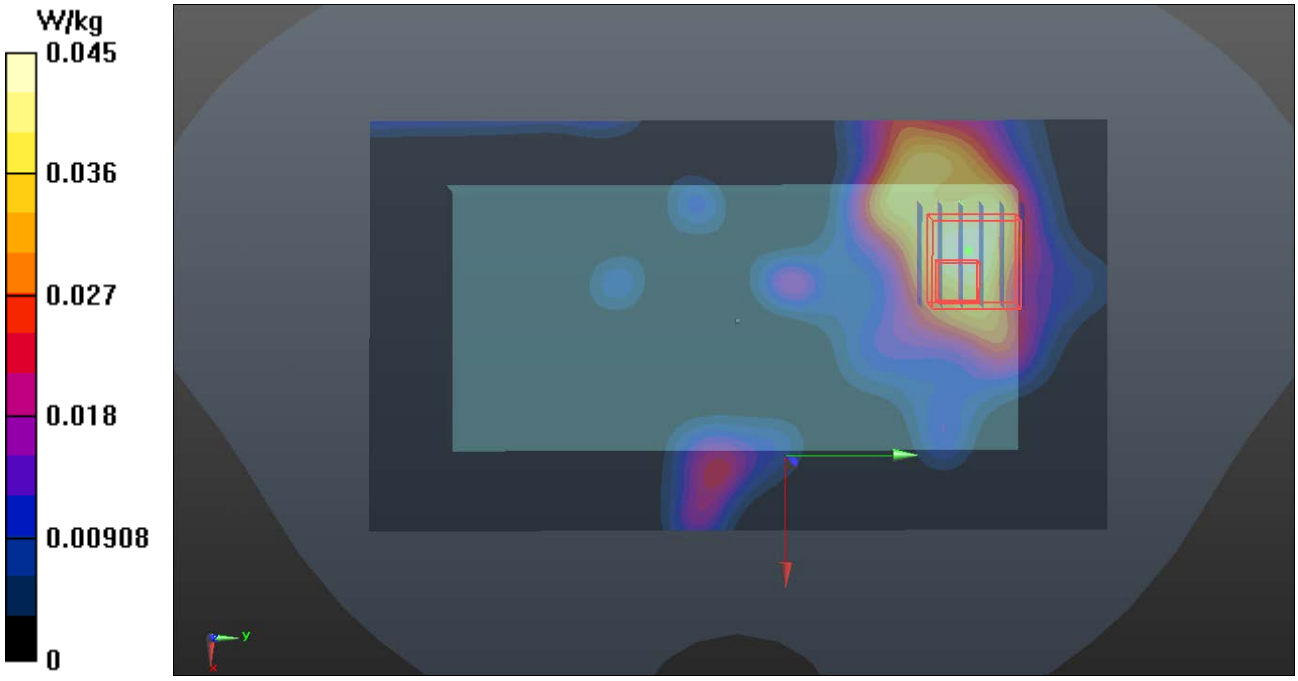

P27 802.11a_Front Face_1cm_Ch100

DUT: 141027C05

Communication System: WLAN_5G; Frequency: 5500 MHz;Duty Cycle: 1:1.11
Medium: B50T60N2_1208 Medium parameters used: f = 5500 MHz; σ = 5.749 S/m; ε_r = 46.751; ρ = 1000 kg/m^3
Ambient Temperature：22.8 ℃； Liquid Temperature：21.7 ℃

DASY5 Configuration:
- Probe: EX3DV4 - SN3590; ConvF(4.64, 4.64, 4.64); Calibrated: 2014/03/04;
- Sensor-Surface: 2mm (Mechanical Surface Detection)
- Electronics: DAE4 Sn861; Calibrated: 2014/04/23
- Phantom: Twin SAM Phantom_1654; Type: QD000P40;
- Measurement SW: DASY52, Version 52.8 (7); SEMCAD X Version 14.6.10 (7331)

- Area Scan (101x181x1): Interpolated grid: dx=1.000 mm, dy=1.000 mm
Maximum value of SAR (interpolated) = 0.0844 W/kg

- Zoom Scan (6x6x12)/Cube 0: Measurement grid: dx=5mm, dy=5mm, dz=2mm
Reference Value = 0.9900 V/m; Power Drift = 0.08 dB
Peak SAR (extrapolated) = 0.156 W/kg
SAR(1 g) = 0.036 W/kg; SAR(10 g) = 0.015 W/kg
Maximum value of SAR (measured) = 0.0635 W/kg

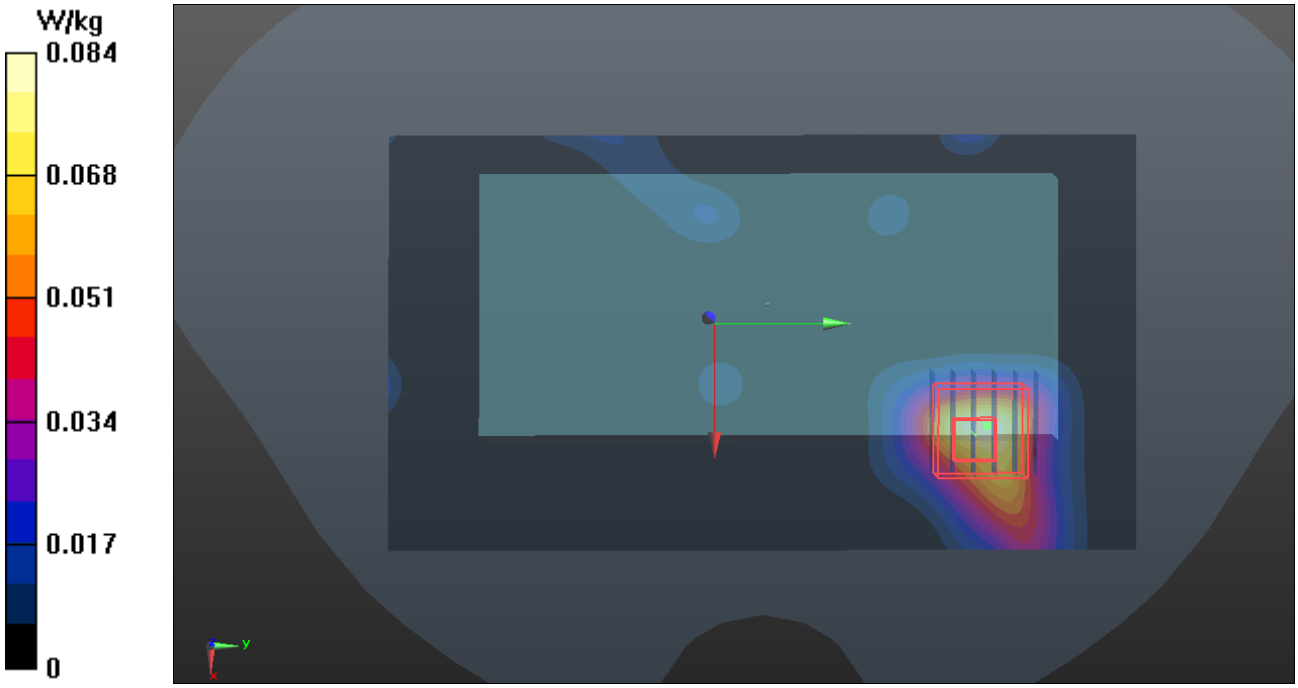

P28 802.11a_Front Face_1cm_Ch157

DUT: 141027C05

Communication System: WLAN_5G; Frequency: 5785 MHz;Duty Cycle: 1:1.11
Medium: B50T60N2_1208 Medium parameters used: f = 5785 MHz; σ = 6.161 S/m; ε_r = 46.176; ρ = 1000 kg/m^3
Ambient Temperature：22.8 ℃; Liquid Temperature：21.7 ℃

DASY5 Configuration:
- Probe: EX3DV4 - SN3590; ConvF(4.74, 4.74, 4.74); Calibrated: 2014/03/04;
- Sensor-Surface: 2mm (Mechanical Surface Detection)
- Electronics: DAE4 Sn861; Calibrated: 2014/04/23
- Phantom: Twin SAM Phantom_1654; Type: QD000P40;
- Measurement SW: DASY52, Version 52.8 (7); SEMCAD X Version 14.6.10 (7331)

- Area Scan (101x181x1): Interpolated grid: dx=1.000 mm, dy=1.000 mm
Maximum value of SAR (interpolated) = 0.178 W/kg

- Zoom Scan (6x6x12)/Cube 0: Measurement grid: dx=5mm, dy=5mm, dz=2mm
Reference Value = 1.394 V/m; Power Drift = -0.05 dB
Peak SAR (extrapolated) = 0.403 W/kg
SAR(1 g) = 0.107 W/kg; SAR(10 g) = 0.046 W/kg
Maximum value of SAR (measured) = 0.192 W/kg

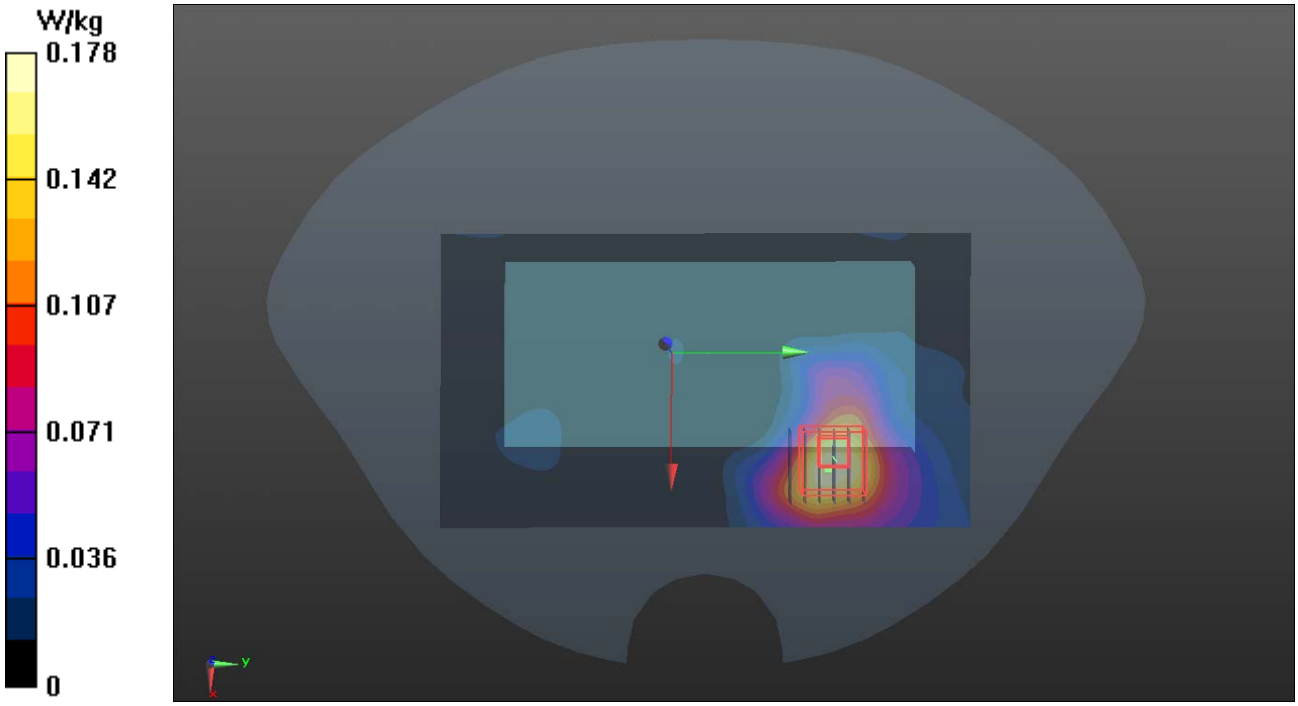

P29 LTE 7_QPSK20M_Bottom Side_1cm_Ch21350_1RB_OS0

DUT: 141027C05

Communication System: LTE; Frequency: 2560 MHz;Duty Cycle: 1:1
Medium: B25T27N1_1124 Medium parameters used: f = 2560 MHz; σ = 2.122 S/m; ε_r = 52.199; ρ = 1000 kg/m^3
Ambient Temperature：21.5 ℃; Liquid Temperature：21.3 ℃

DASY5 Configuration:
- Probe: EX3DV4 - SN3650; ConvF(6.69, 6.69, 6.69); Calibrated: 2014/07/28;
- Sensor-Surface: 2mm (Mechanical Surface Detection)
- Electronics: DAE4 Sn1277; Calibrated: 2014/07/22
- Phantom: Twin SAM Phantom_1485; Type: QD000P40;
- Measurement SW: DASY52, Version 52.8 (8); SEMCAD X Version 14.6.10 (7331)

- Area Scan (71x141x1): Interpolated grid: dx=1.200 mm, dy=1.200 mm
Maximum value of SAR (interpolated) = 1.87 W/kg
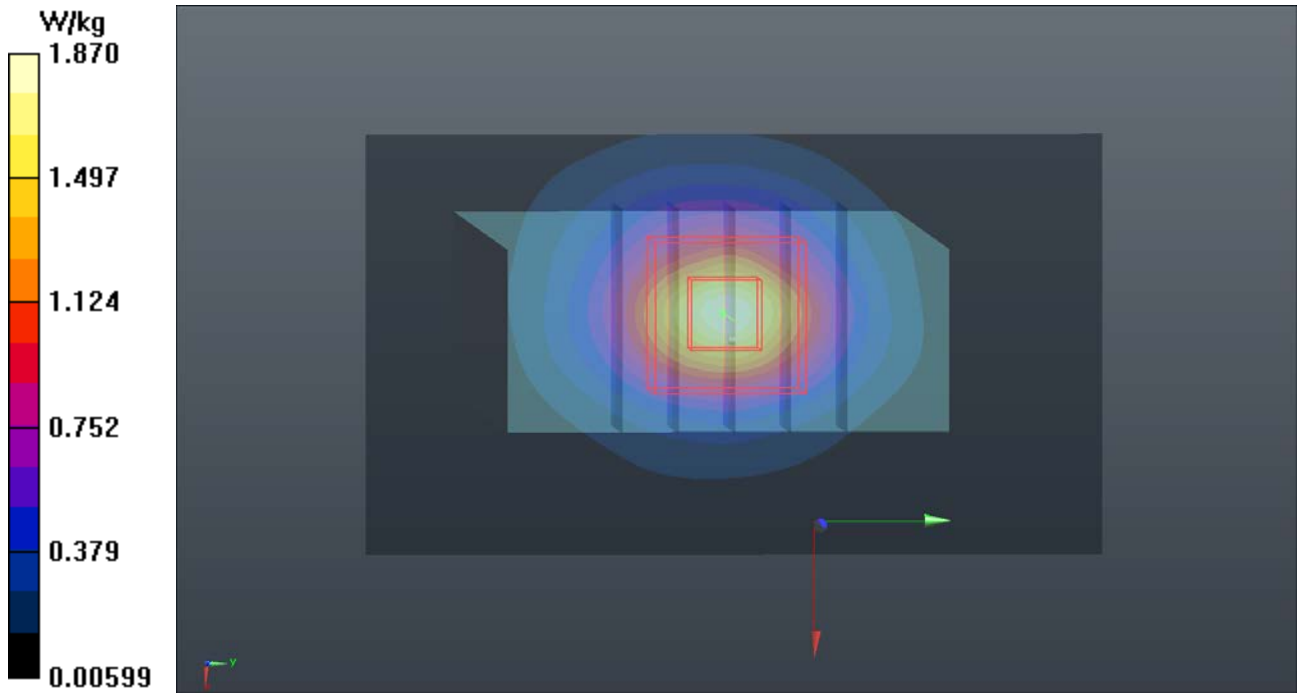
- Zoom Scan (5x5x7)/Cube 0: Measurement grid: dx=8mm, dy=8mm, dz=5mm
Reference Value = 26.98 V/m; Power Drift = 0.03 dB
Peak SAR (extrapolated) = 2.28 W/kg
SAR(1 g) = 1.16 W/kg; SAR(10 g) = 0.562 W/kg
Maximum value of SAR (measured) = 1.72 W/kg