HEARING AID COMPATIBILITY RF EMISSIONS TEST REPORT

FCC ID : **WYPP14010**
Equipment : **Smart phone**
Brand Name : **Sonim**
Model Name : **XP9900 (P14001)**
M-Rating : **M4**
Applicant : **Sonim Technologies, Inc.**
4445 Eastgate Mall, Suite 200, San Diego, CA 92121, USA
Manufacturer : **Sonim Technologies, Inc.**
4445 Eastgate Mall, Suite 200, San Diego, CA 92121, USA
Standard : **FCC 47 CFR §20.19**
ANSI C63.19-2011

We, Sporton International Inc. (Kunshan), would like to declare that the tested sample has been evaluated in accordance with the test procedures and has been in compliance with the applicable technical standards.

The test results in this report apply exclusively to the tested model / sample. Without written approval of Sporton International Inc. (Kunshan), the test report shall not be reproduced except in full.

Si Zhang

Approved by: Si Zhang

ACCREDITED
Cert #5145.02

Sporton International Inc. (Kunshan)
No. 1098, Pengxi North Road, Kunshan Economic Development Zone Jiangsu Province 215300
People's Republic of China

Table of Contents

1. General Information 4
2. Testing Location 5
3. Applied Standards 5
4. RF Audio Interference Level 5
5. Air Interface and Operating Mode 6
6. Measurement System Specification 7
   6.1 E-Field Probe System 7
   6.2 Data Storage and Evaluation 8
7. RF Emissions Test Procedure 9
8. Test Equipment List 12
9. Measurement System Validation 13
10. Modulation Interference Factor 14
11. Low-power Exemption 15
12. HAC RF Emission Test Results 16
13. Uncertainty Assessment 17
14. References 19

Appendix A. Plots of System Performance Check
Appendix B. Plots of RF Emission Measurement
Appendix C. DASY Calibration Certificate
Appendix D. Test Setup Photos
Appendix E. UID specifications for HAC RFE

History of this test report

Report No.	Version	Description	Issued Date
HA371405A	Rev. 01	Initial issue of report	Nov. 02, 2023

1. General Information

Product Feature & Specification	
Applicant Name	Sonim Technologies, Inc.
Equipment Name	Smart phone
Brand Name	Sonim
Model Name	XP9900 (P14001)
IMEI Code	016188000787494
FCC ID	WYPP14010
HW	V1.0
SW	10.0.0-01-12.0.0-10.60.10
EUT Stage	Identical Prototype
Date Tested	2023/8/22
Frequency Band	WCDMA Band II: 1850 MHz ~ 1910 MHz WCDMA Band IV: 1710 MHz ~ 1755 MHz WCDMA Band V: 824 MHz ~ 849 MHz LTE Band 2: 1850 MHz ~ 1910 MHz LTE Band 4: 1710 MHz ~ 1755 MHz LTE Band 5: 824 MHz ~ 849 MHz LTE Band 7: 2500 MHz ~ 2570 MHz LTE Band 12: 699 MHz ~ 716 MHz LTE Band 13: 777 MHz ~ 787 MHz LTE Band 14: 788 MHz ~ 798 MHz LTE Band 25: 1850 MHz ~ 1915 MHz LTE Band 26: 814 MHz ~ 849 MHz LTE Band 30: 2305 MHz ~ 2315 MHz LTE Band 38: 2570 MHz ~ 2620 MHz LTE Band 41: 2496 MHz ~ 2690 MHz LTE Band 42: 3450 MHz ~ 3550MHz, 3550 MHz ~ 3600MHz LTE Band 43: 3600 MHz ~ 3700MHz LTE Band 48: 3550 MHz ~ 3700 MHz LTE Band 66: 1710 MHz ~ 1780 MHz LTE Band 71: 663 MHz ~ 698 MHz 5G NR n2 : 1850 MHz ~ 1910 MHz 5G NR n5: 824 MHz ~ 849 MHz 5G NR n14 : 788 MHz ~ 798 MHz 5G NR n25 : 1850 MHz ~ 1915 MHz 5G NR n30: 2305 MHz ~ 2315 MHz 5G NR n66: 1710 MHz ~ 1780 MHz 5G NR n71: 663 MHz ~ 698 MHz 5G NR n41: 2496 MHz ~ 2690 MHz 5G NR n48: 3550 MHz ~ 3700 MHz 5G NR n77: 3450 MHz ~ 3550 MHz, 3700 MHz ~ 3980 MHz 5G NR n78: 3450 MHz ~ 3550 MHz WLAN 2.4GHz Band: 2412 MHz ~ 2462 MHz WLAN 5.2GHz Band: 5180 MHz ~ 5240 MHz WLAN 5.3GHz Band: 5260 MHz ~ 5320 MHz WLAN 5.5GHz Band: 5500 MHz ~ 5700 MHz WLAN 5.8GHz Band: 5745 MHz ~ 5825 MHz Bluetooth: 2402 MHz ~ 2480 MHz NFC: 13.56 MHz
Mode	GSM/GPRS/EGPRS RMC/AMR 12.2Kbps HSDPA HSUPA DC-HSDPA HSPA+(16QAM uplink is not supported) LTE: QPSK, 16QAM, 64QAM, 256QAM 5G NR: CP-OFDM / DFT-s-OFDM, PI/2 BPSK, QPSK, 16QAM, 64QAM, 256QAM WLAN 2.4GHz 802.11b/g/n HT20 WLAN 5GHz 802.11a/n HT20/HT40 WLAN 5GHz 802.11ac VHT20/VHT40/VHT80 Bluetooth BR/EDR/LE NFC: ASK
Remark: 1. This is a variant report for XP9900 (P14001), the difference between previous and current project please refer to the XP9900	

(P14001)_Class II Permissive Change letter which is exhibit separately. According to the difference, only the worst cases from original test report (CTTL report No. I22Z60589-SEM01) were verified for the differences.

2. Testing Location

Sporton International Inc. (Kunshan) is accredited to ISO/IEC 17025:2017 by American Association for Laboratory Accreditation with Certificate Number 5145.02.

Testing Laboratory			
Test Firm	Sporton International Inc. (Kunshan)		
Test Site Location	No. 1098, Pengxi North Road, Kunshan Economic Development Zone Jiangsu Province 215300 People's Republic of China TEL : +86-512-57900158		
Test Site No.	Sporton Site No.	FCC Designation No.	FCC Test Firm Registration No.
	SAR01-KS	CN1257	314309

3. Applied Standards

- FCC CFR47 Part 20.19
- ANSI C63.19-2011
- FCC KDB 285076 D01 HAC Guidance v06r02
- FCC KDB 285076 D03 HAC FAQ v01r06

4. RF Audio Interference Level

FCC wireless hearing aid compatibility rules ensure that consumers with hearing loss are able to access wireless communications services through a wide selection of handsets without experiencing disabling radio frequency (RF) interference or other technical obstacles.
To define and measure the hearing aid compatibility of handsets, in CFR47 part 20.19 ANSI C63.19 is referenced. A handset is considered hearing aid-compatible for acoustic coupling if it meets a rating of at least M3 under ANSI C63.19, and A handset is considered hearing aid compatible for inductive coupling if it meets a rating of at least T3. According to ANSI C63.19 2011 version, for acoustic coupling, the RF electric field emissions of wireless communication devices should be measured and rated according to the emission level as below.

Emission Categories	E-field emissions	
	<960Mhz	>960Mhz
M1	50 to 55 dB (V/m)	40 to 45 dB (V/m)
M2	45 to 50 dB (V/m)	35 to 40 dB (V/m)
M3	40 to 45 dB (V/m)	30 to 35 dB (V/m)
M4	<40 dB (V/m)	<30 dB (V/m)

Table 4.1 Telephone near-field categories in linear units

5. Air Interface and Operating Mode

Air Interface	Band MHz	Type	C63.19 Tested	Simultaneous Transmitter	Name of Voice Service	Power Reduction
WCDMA	Band II	VO	No(1)	WLAN, BT	CMRS Voice	No
	Band IV			WLAN, BT		No
	Band V			WLAN, BT		No
	HSPA	VD	No(1)	WLAN, BT	Google Meet	No
LTE (FDD)	Band 2	VD	No(1)	WLAN, BT	VoLTE / Google Meet	No
	Band 4			WLAN, BT		No
	Band 5			WLAN, BT		No
	Band 7			WLAN, BT		No
	Band 12			WLAN, BT		No
	Band 13			WLAN, BT		No
	Band 14			WLAN, BT		No
	Band 25			WLAN, BT		No
	Band 26			WLAN, BT		No
	Band 30			WLAN, BT		No
	Band 66			WLAN, BT		No
	Band 71			WLAN, BT		No
LTE (TDD)	Band 38	VD	Yes	WLAN, BT	VoLTE / Google Meet	No
	Band 41			WLAN, BT		No
	Band 42			WLAN, BT		No
	Band 43			WLAN, BT		No
	Band 48			WLAN, BT		No
5G NR (FDD)	n2	VD	No(1)	WLAN, BT	VoNR / Google Meet	No
	n5			WLAN, BT		No
	n14			WLAN, BT		No
	n25			WLAN, BT		No
	n30			WLAN, BT		No
	n66			WLAN, BT		No
	n71			WLAN, BT		No
5G NR (TDD)	n41	VD	No(1)	WLAN, BT	VoNR / Google Meet	No
	n48			WLAN, BT		No
	n77			WLAN, BT		No
	n78			WLAN, BT		No
Wi-Fi	2450	VD	Yes	GSM,WCDMA,LTE,5G NR	VoWiFi / Google Meet	No
	5200	VD	No(1)	GSM,WCDMA,LTE,5G NR		No
	5300			GSM,WCDMA,LTE,5G NR		No
	5500			GSM,WCDMA,LTE,5G NR		No
	5800			GSM,WCDMA,LTE,5G NR		No
BT	2450	DT	No	GSM,WCDMA,LTE,5G NR	NA	No

Type Transport:
VO= Voice only
DT= Digital Transport only (no voice)
VD= CMRS and IP Voice Service over Digital Transport

Remark:
1. The air interface is exempted from testing by low power exemption that its average antenna input power plus its MIF is ≤17 dBm, and is rated as M4.

6. Measurement System Specification

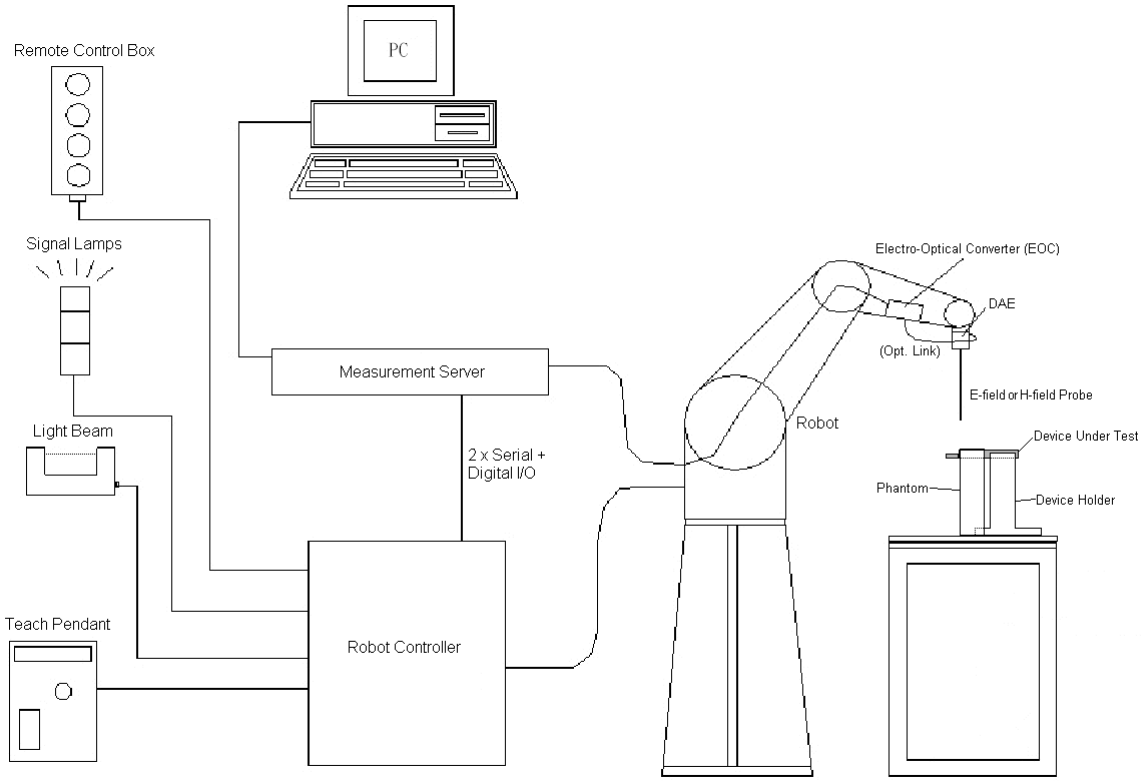

Fig 6.1 System Configurations

6.1 E-Field Probe System

E-Field Probe Specification
<EF3DV3>

Construction	One dipole parallel, two dipoles normal to probe axis Built-in shielding against static charges
Calibration	In air from 30 MHz to 6.0 GHz (absolute accuracy ±6.0%, k=2)
Frequency	30 MHz to 6 GHz; Linearity: ± 2.0 dB (100 MHz to 3 GHz)
Directivity	± 0.2 dB in air (rotation around probe axis) ± 0.4 dB in air (rotation normal to probe axis)
Dynamic Range	2 V/m to 1000 V/m (M3 or better device readings fall well below diode compression point)
Linearity	± 0.2 dB
Dimensions	Overall length: 337 mm (Tip: 20 mm) Tip diameter: 4 mm (Body: 12 mm) Distance from probe tip to dipole centers: 1.5 mm

Photo of E-field Probe

Probe Tip Description:
HAC field measurements take place in the close near field with high gradients. Increasing the measuring distance from the source will generally decrease the measured field values (in case of the validation dipole approx. 10%per mm).

6.2 Data Storage and Evaluation

The DASY software stores the assessed data from the data acquisition electronics as raw data (in microvolt readings from the probe sensors), together with all the necessary software parameters for the data evaluation (probe calibration data, and device frequency and modulation data) in measurement files.

Probe parameters：	- Sensitivity	$Norm_i$, a_{i0}, a_{i1}, a_{i2}
	- Conversion factor	$ConvF_i$
	- Diode compression point	dcp_i
Device parameters：	- Frequency	f
	- Crest factor	cf
Media parameters：	- Conductivity	σ
	- Density	ρ

The formula for each channel can be given as：

$$\mathbf{V_i = U_i + U_i^2 \cdot \frac{cf}{dcp_i}}$$

with V_i = compensated signal of channel i, (i = x, y, z)
U_i = input signal of channel i, (i = x, y, z)
cf = crest factor of exciting field (DASY parameter)
dcp_i = diode compression point (DASY parameter)

From the compensated input signals, the primary field data for each channel can be evaluated：

E-field Probes：$\mathbf{E_i = \sqrt{\frac{V_i}{Norm_i \cdot ConvF}}}$

with V_i = compensated signal of channel i, (i = x, y, z)
$Norm_i$ = sensor sensitivity of channel i, (i = x, y, z), μV/(V/m)^2 for E-field Probes
ConvF = sensitivity enhancement in solution
f = carrier frequency [GHz]
E_i = electric field strength of channel i in V/m

The RSS value of the field components gives the total field strength (Hermitian magnitude)：

$$\mathbf{E_{tot} = \sqrt{E_x^2 + E_y^2 + E_z^2}}$$

The primary field data are used to calculate the derived field units.

7. RF Emissions Test Procedure

Referenced from ANSI C63.19 -2011 section 5.5.1

a. Confirm the proper operation of the field probe, probe measurement system, and other instrumentation and the positioning system.
b. Position the WD in its intended test position.
c. Set the WD to transmit a fixed and repeatable combination of signal power and modulation characteristic that is representative of the worst case (highest interference potential) encountered in normal use. Transiently occurring start-up, changeover, or termination conditions, or other operations likely to occur less than 1% of the time during normal operation, may be excluded from consideration.
d. The center sub-grid shall be centered on the T-Coil mode perpendicular measurement point or the acoustic output, as appropriate. Locate the field probe at the initial test position in the 50 mm by 50 mm grid, which is contained in the measurement plane, refer to illustrated in Figure 8.2. If the field alignment method is used, align the probe for maximum field reception.
e. Record the reading at the output of the measurement system.
f. Scan the entire 50 mm by 50 mm region in equality spaced increments and record the reading at each measurement point, The distance between measurement points shall be sufficient to assure the identification of the maximum reading.
g. Identify the five contiguous sub-grids around the center sub-grid whose maximum reading is the lowest of all available choices. This eliminates the three sub-grids with the maximum readings. Thus, the six areas to be used to determine the WD's highest emissions are identified.
h. Identify the maximum reading within the non-excluded sub-grids identified in step g).
i. Indirect measurement method
j. The RF audio interference level in dB (V/m) is obtained by adding the MIF (in dB) to the maximum steady-state rms field-strength reading, in dB (V/m)
k. Compare this RF audio interference level with the categories in ANSI C63.19-2011 clause 8 and record the resulting WD category rating.
l. For the T-Coil perpendicular measurement location is ≥5.0 mm from the center of the acoustic output, then two different 50 mm by 50 mm areas may need to be scanned, the first for the microphone mode assessment and the second for the T-Coil assessment.
m. The second for the T-Coil assessment, with the grid shifted so that it is centered on the perpendicular measurement point. Record the WD category rating.

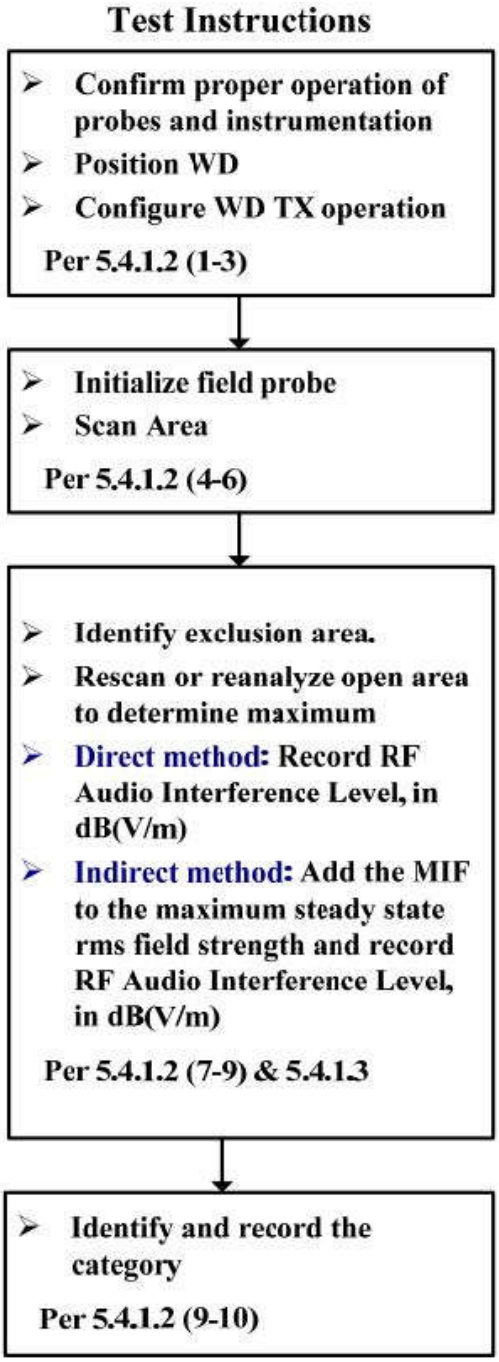

Figure 8.1 RF Emissions Flow Chart

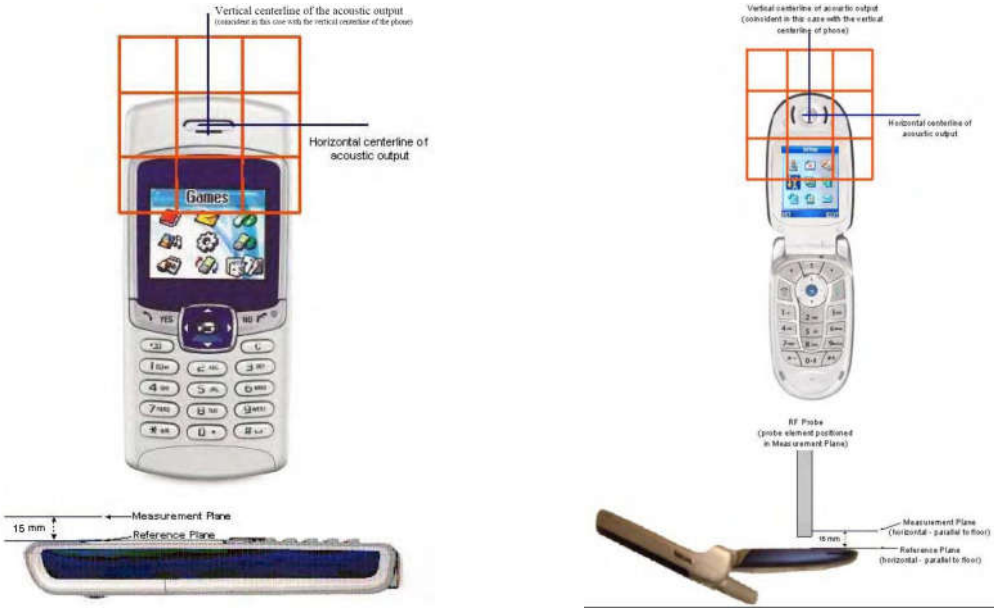

Fig 8.2 EUT reference and plane for HAC RF emission measurements

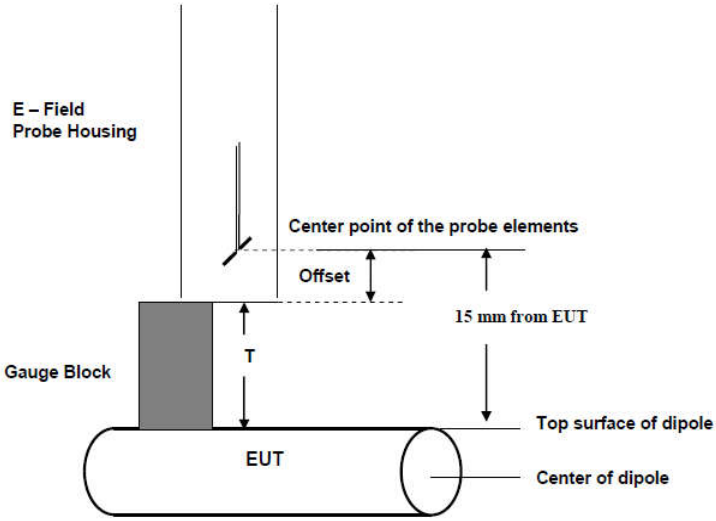

Fig. 8.3 Gauge block with E-field probe

8. Test Equipment List

Manufacturer	Name of Equipment	Type/Model	Serial Number	Calibration	
				Last Cal.	Due Date
SPEAG	2600Mhz Calibration Dipole	CD2600V3	1030	2022/6/29	2025/6/26
SPEAG	Data Acquisition Electronics	DAE4	1649	2023/4/24	2024/4/23
SPEAG	Isotropic E-Field Probe	EF3DV3	4050	2023/1/24	2024/1/23
R&S	Base Station	CMW500	143030	2023/7/5	2024/7/4
Anritsu	Vector Signal Generator	MG3710A	6201682672	2023/1/5	2024/1/4
BONN	POWER AMPLIFIER	BLMA 0830-3	087193A	NA	NA
BONN	POWER AMPLIFIER	BLMA 2060-2	087193B	NA	NA
Agilent	Dual Directional Coupler	778D	20500	2023/7/5	2024/7/4
Agilent	Dual Directional Coupler	11691D	MY48151020	2023/7/5	2024/7/4
Rohde & Schwarz	Power Meter	NRVD	102081	2023/7/5	2024/7/4
Rohde & Schwarz	Power Sensor	NRV-Z5	100538	2023/7/5	2024/7/4
Rohde & Schwarz	Power Sensor	NRV-Z5	100539	2023/7/5	2024/7/4
MCL	Attenuation1	BW-S10W5+	N/A	NA	NA
MCL	Attenuation2	BW-S10W5+	N/A	NA	NA
MCL	Attenuation3	BW-S10W5+	N/A	NA	NA
Rohde & Schwarz	Spectrum Analyzer	FSV7	101631	2022/10/12	2023/10/11
Testo	Thermo-Hygrometer	608-H1	1241332126	2023/1/5	2024/1/4

Note:
1. NCR: “No-Calibration Required”
2. Referring to KDB 865664 D01v01r04, the dipole calibration interval can be extended to 3 years with justification. The dipoles are also not physically damaged, or repaired during the interval.
3. The justification data of dipole can be found in appendix C. The return loss is < -20dB, within 20% of prior calibration, the impedance is within 5 ohm of prior calibration.

9. Measurement System Validation

Each DASY system is equipped with one or more system validation kits. These units, together with the predefined measurement procedures within the DASY software, enable the user to conduct the system performance check and system validation. System validation kit includes a dipole, tripod holder to fix it underneath the test Arch and a corresponding distance holder.
The system performance check verifies that the system operates within its specifications. System and operator errors can be detected and corrected. It is recommended that the system performance check be performed prior to any usage of the system in order to guarantee reproducible results. The system performance check uses normal HAC measurements in a simplified setup with a well characterized source. This setup was selected to give a high sensitivity to all parameters that might fail or vary over time. The system check does not intend to replace the calibration of the components, but indicates situations where the system uncertainty is exceeded due to drift or failure.

<Test Setup>

1. In the simplified setup for system evaluation, the EUT is replaced by a calibrated dipole and the power source is replaced by a continuous wave which comes from a signal generator.
2. The center point of the probe element(s) is 15mm from the closest surface of the dipole elements.
3. The calibrated dipole must be placed beneath the arch phantom. The equipment setup is shown below:
4. The output power on dipole port must be calibrated to 20dBm (100mW) before dipole is connected.

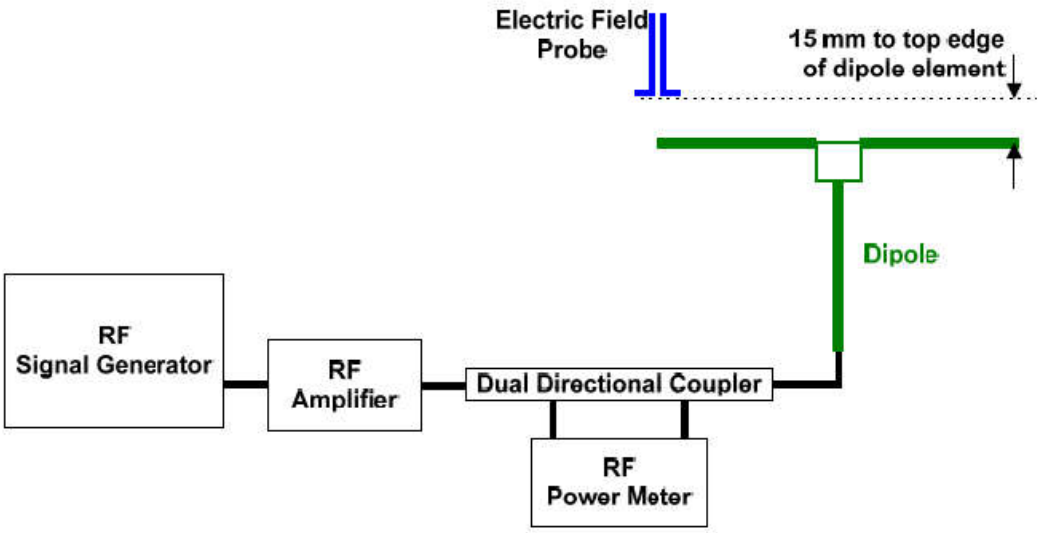

Fig. 7.1 Setup Diagram

<Validation Results>

Comparing to the original E-field value provided by SPEAG, the verification data should be within its specification of 18 %. Table 6.1 shows the target value and measured value. The table below indicates the system performance check can meet the variation criterion and the plots can be referred to appendix A of this report.
Deviation = ((Average E-field Value) - (Target value)) / (Target value) * 100%

Frequency (MHz)	Input Power (dBm)	Target Value (V/m)	E-Field 1 (V/m)	E-Field 2 (V/m)	Average Value (V/m)	Deviation (%)	Date
2600	20	86	83.85	83.41	83.63	-2.76	2023/8/22

10. Modulation Interference Factor

The HAC Standard ANSI C63.19-2011 defines a new scaling using the Modulation Interference Factor (MIF).
For any specific fixed and repeatable modulated signal, a modulation interference factor (MIF, expressed in dB) may be developed that relates its interference potential to its steady-state rms signal level or average power level. This factor is a function only of the audio-frequency amplitude modulation characteristics of the signal and is the same for field-strength and conducted power measurements. It is important to emphasize that the MIF is valid only for a specific repeatable audio-frequency amplitude modulation characteristic. Any change in modulation characteristic requires determination and application of a new MIF
The Modulation Interference factor (MIF, in dB) is added to the measured average E-field (in dBV/m) and converts it to the RF Audio Interference level (in dBV/m). This level considers the audible amplitude modulation components in the RF E-field. CW fields without amplitude modulation are assumed to not interfere with the hearing aid electronics. Modulations without time slots and low fluctuations at low frequencies have low MIF values, TDMA modulations with narrow transmission and repetition rates of few 100 Hz have high MIF values and give similar classifications as ANSI C63.19-2011.
ER3D, EF3D and EU2D E-field probes have a bandwidth <10 kHz and can therefore not evaluate the RF envelope in the full audio band. DASY52 is therefore using the indirect measurement method according to ANSI C63.19-2011 which is the primary method. These near field probes read the averaged E-field measurement. Especially for the new high peak-to-average (PAR) signal types, the probes shall be linearized by PMR calibration in order to not overestimate the field reading. Probe Modulation Response (PMR) calibration linearizes the probe response over its dynamic range for specific modulations which are characterized by their UID and result in an uncertainty specified in the probe calibration certificate. The MIF is characteristic for a given waveform envelope and can be used as a constant conversion factor if the probe has been PMR calibrated.
The evaluation method for the MIF is defined in ANSI C63.19-2011 section D.7. An RMS demodulated RF signal is fed to a spectral filter (similar to an A weighting filter) and forwarded to a temporal filter acting as a quasi-peak detector. The averaged output of these filtering is scaled to a 1 kHz 80% AM signal as reference. MIF measurement requires additional instrumentation and is not well suited for evaluation by the end user with reasonable uncertainty. It may alliteratively be determined through analysis and simulation, because it is constant and characteristic for a communication signal. DASY52 uses well-defined signals for PMR calibration. The MIF of these signals has been determined by simulation and it is automatically applied.
The MIF measurement uncertainty is estimated as follows, declared by HAC equipment provider SPEAG, for modulation frequencies from slotted waveforms with fundamental frequency and at least 2 harmonics within 10 kHz:

1. 0.2 dB for MIF: -7 to +5 dB
2. 0.5 dB for MIF: -13 to +11 dB
3. 1 dB for MIF: > -20 dB

MIF values applied in this test report were provided by the HAC equipment provider of SPEAG, and the worst values for all air interface are listed below to be determine the Low-power Exemption.

UID	Communication System Name	MIF(dB)
10460	UMTS-FDD(WCDMA, AMR)	-25.43
10225	UMTS-FDD (HSPA+)	-20.39
10170	LTE-FDD(SC-FDMA,1RB,20MHz,16-QAM)	-9.76
10173	LTE-TDD (SC-FDMA, 1 RB, 20 MHz, 16-QAM)	-1.44
10769	5G NR (CP-OFDM, 1 RB, 15 MHz, QPSK, 15 kHz)	-12.08
10061	IEEE 802.11b WiFi 2.4 GHz (DSSS, 11 Mbps)	-2.02
10077	IEEE 802.11g WiFi 2.4 GHz (DSSS/OFDM, 54 Mbps)	0.12
10427	IEEE 802.11n (HT Greeneld, 150 Mbps, 64-QAM)	-13.44
10069	IEEE 802.11a/h WiFi 5 GHz (OFDM, 54 Mbps)	-3.15
10616	IEEE 802.11ac WiFi (40MHz, MCS0, 90pc duty cycle)	-5.57

11. Low-power Exemption

<Max Tune-up Limit>

<Ant1>

Frequency Band		Average Power (dBm)
5G NR FDD	n25	24.00
	n30	24.00
	n66	24.00

<Ant5>

Frequency Band		Average Power (dBm)
5G NR TDD Duty(100%)	n48	24.00

<Ant6>

Frequency Band		Average Power (dBm)
5G NR FDD	n25	24.00
	n66	24.00

<Low Power Exemption>

<Ant1>

Air Interface	Max Average Antenna Input Power (dBm)	Worst Case MIF (dB)	Power + MIF(dB)	C63.19 test required
5G FR1 - FDD	24.00	-12.08	11.92	No

<Ant5>

Air Interface	Max Average Antenna Input Power (dBm)	Worst Case MIF (dB)	Power + MIF(dB)	C63.19 test required
5G NR - TDD	24.00	-12.08	11.92	No

<Ant6>

Air Interface	Max Average Antenna Input Power (dBm)	Worst Case MIF (dB)	Power + MIF(dB)	C63.19 test required
5G FR1 - FDD	24.00	-12.08	11.92	No

General Note:

1. According to ANSI C63.19 2011-version, for the air interface technology of a device is exempt from testing when its average antenna input power plus its MIF is ≤17 dBm for any of its operating modes.
2. HAC RF rating is M4 for the air interface which meets the low power exemption.
3. Only operations relevant to this permissive change were evaluated for compliance, other test results can be referred to original report.

12. HAC RF Emission Test Results

Plot No.	Air Interface	Mode	Channel	Transmit Ant.	MIF	E-Field (dBV/m)	Margin to FCC M3 limit (dB)	E-Field M Rating
1	LTE Band 41 PC2	20M_QPSK_1_0	40185	Ant 2	-3.41	25.13	9.87	M4

Remark:
1. The HAC measurement system applies MIF value onto the measured RMS E-field, which is indirect method in ANSI C63.19 2011 version, and reports the RF audio interference level.
2. Phone Condition: Mute on; Backlight off; Max Volume

Test Engineer： Martin Li, Light Wang

13. Uncertainty Assessment

The component of uncertainly may generally be categorized according to the methods used to evaluate them. The evaluation of uncertainly by the statistical analysis of a series of observations is termed a Type A evaluation of uncertainty. The evaluation of uncertainty by means other than the statistical analysis of a series of observation is termed a Type B evaluation of uncertainty. Each component of uncertainty, however evaluated, is represented by an estimated standard deviation, termed standard uncertainty, which is determined by the positive square root of the estimated variance.

The combined standard uncertainty of the measurement result represents the estimated standard deviation of the result. It is obtained by combining the individual standard uncertainties of both Type A and Type B evaluation using the usual “root-sum-squares” (RSS) methods of combining standard deviations by taking the positive square root of the estimated variances. Expanded uncertainty is a measure of uncertainty that defines an interval about the measurement result within which the measured value is confidently believed to lie. It is obtained by multiplying the combined standard uncertainty by a coverage factor. For purpose of this document, a coverage factor two is used, which corresponds to confidence interval of about 95 %. The DASY uncertainty Budget is showed in Table 14.1.

The judgment of conformity in the report is based on the measurement results excluding the measurement uncertainty.

Error Description	Uncertainty Value (±%)	Probability	Divisor	(Ci) E	Standard Uncertainty (E) (±%)
Measurement System					
Probe Calibration	5.1	N	1	1	5.1
Axial Isotropy	4.7	R	1.732	1	2.7
Sensor Displacement	16.5	R	1.732	1	9.5
Boundary Effects	2.4	R	1.732	1	1.4
Phantom Boundary Effect	7.2	R	1.732	1	4.2
Linearity	4.7	R	1.732	1	2.7
Scaling with PMR calibration	10.0	R	1.732	1	5.8
System Detection Limit	1.0	R	1.732	1	0.6
Readout Electronics	0.3	N	1	1	0.3
Response Time	2.6	R	1.732	1	1.5
Integration Time	2.6	R	1.732	1	1.5
RF Ambient Conditions	3.0	R	1.732	1	1.7
RF Reflections	12.0	R	1.732	1	6.9
Probe Positioner	1.2	R	1.732	1	0.7
Probe Positioning	4.7	R	1.732	1	2.7
Extrap. and Interpolation	1.0	R	1.732	1	0.6
Test Sample Related					
Device Positioning Vertical	4.7	R	1.732	1	2.7
Device Positioning Lateral	1.0	R	1.732	1	0.6
Device Holder and Phantom	2.4	R	1.732	1	1.4
Power Drift	5.0	R	1.732	1	2.9
Phantom and Setup Related					
Phantom Thickness	2.4	R	1.732	1	1.4
Combined Std. Uncertainty					16.4%
Coverage Factor for 95 %					K=2
Expanded STD Uncertainty					32.7%

Table 14.1 Uncertainty Budget of HAC free field assessment

14. References

[1] ANSI C63.19-2011, “American National Standard for Methods of Measurement of Compatibility between Wireless Communications Devices and Hearing Aids”, 27 May 2011.

[2] FCC KDB 285076 D01v06r03, “Equipment Authorization Guidance for Hearing Aid Compatibility”, April 24, 2023

[3] FCC KDB 285076 D03v01r06, “Hearing aid compatibility frequently asked questions”, July 20, 2022.

[4] SPEAG DASY System Handbook

------THE END------