sonim BUILT FOR LIFE™

XP5s

USER GUIDE

© 2017 by Sonim Technologies, Inc. All rights reserved.

Version 1 11.07.2017

GENERAL INFORMATION

Copyright © 2017 Sonim Technologies, Inc.
Sonim and the Sonim logo are trademarks of Sonim Technologies, Inc. Other company and product names may be trademarks or registered trade-marks of the respective owners with whom they are associated.

THIRD PARTY TRADEMARKS

Google, Android, Google Calendar, Google Now, Google Play and other marks are trademarks of Google Inc.

DISPOSAL OF OLD ELECTRICAL AND ELECTRONIC EQUIPMENT

The symbol of the crossed-out wheeled bin indicates that within the countries in the European Union, this product, and any enhancements marked with this symbol, cannot be disposed as unsorted waste but must be taken to separate collection at their end- of-life.

DISPOSAL OF BATTERY

Please check local regulations for disposal of batteries. The battery should never be placed in municipal waste. Use a battery disposal facility if available.

GUIDELINE FOR HEADPHONE AND EARPHONE

To prevent possible hearing damage, please do not listen at high volume levels for long periods.

REGISTER YOUR PHONE

Please register your phone at www.sonimtech.com/register, to receive product information and updates.

Sonim devices are covered by a 3-Year comprehensive warranty. The embedded battery is covered by a 1-Year limited warranty.

Congratulations on the purchase of a Sonim XP5800 mobile phone! This phone is an LTE smartphone enabled and has an intuitive feature-rich user interface, which allows you to make the best use of offered functions.

PHONE MODELS COVERED

This user guide covers Sonim XP5s phone with the model number XP5800. The model name can be seen on backside of the phone.

SONIM SUPPORT INFORMATION

For additional product and support information, visit www.sonimtech.com.

OPTIONS COMMONLY USED ACROSS MENU ITEMS

The following are common actions used across various menu items:

OK	Confirms an action. Use the **Center** selection key to perform this function.
BACK	Use this key to display the previous screen.
MENU	Moves the current working application to the recent applications list/background and displays menu screen.
RECENT	Displays the thumbnails of the applications that you have worked on recently. To remove any application from this list, Select Remove from list from option.

TABLE OF CONTENTS

GENERAL INFORMATION 2

THIRD PARTY TRADEMARKS....2
DISPOSAL OF BATTERY....2
GUIDELINE FOR HEADPHONE AND EARPHONE....2
REGISTER YOUR PHONE....2
PHONE MODELS COVERED....2
SONIM SUPPORT INFORMATION....2
OPTIONS COMMONLY USED ACROSS MENU ITEMS....2

SAFETY GUIDELINES 5

AVOID HIGH TEMPERATURES....6
PERSONAL MEDICAL DEVICES....6
CHILD SAFETY....6
EMERGENCY CALLS....6

BATTERY USAGE 6

INSERTING THE BATTERY....6
CHARGING THE BATTERY....7
YOUR SIM CARD....7
REMOVING THE BATTERY....8
INSERTING MEMORY CARD....8
DISPOSAL OF BATTERY....9
WARNING....9
VERIFYING AND OPTIMIZING BATTERY USAGE....9
TIPS TO EXTEND THE BATTERY LIFE....9

GETTING STARTED 9

WHAT IS IN THE BOX ?....9

USING YOUR SONIM XP5s 11

SWITCHING ON THE PHONE....12
SETTING UP YOUR PHONE....12
MANAGING HOME SCREEN....12
NOTIFICATION BAR ICONS....13
PHONE OPERATIONS WITHOUT SIM CARD....13
SETTING UP AND USING LOCK SCREEN....13
CHANGING THE WALLPAPER....14
TAKING A SCREENSHOT....14
TEXT ENTRY OPTIONS....14
TO ENTER A WORD....14
TO INSERT A NUMBER:....14

MANAGING WIRELESS & NETWORK SETTINGS 15

WI-FI NETWORK....15
BLUETOOTH DEVICES....15
SIM CARDS....16
DATA USAGE....16
MORE....16
ACTIVATING AIRPLANE MODE....16
CELLULAR NETWORKS....16
NETWORK SETTINGS RESET....16
VOICE NOISE CANCELLATION....16

MANAGING DEVICE SETTINGS 17

DISPLAY....17
PROFILES....17
GESTURES....19

MANAGING PERSONAL SETTINGS 20

EMERGENCY INFO....20
LOCATION ACCESS....20
SECURITY....20
LOCKING YOUR SIM CARD....20
MANAGING CREDENTIAL CERTIFICATES....21
ENCHANCED LOCATION SETTINGS....21
APPS ACCESSING YOUR LOCATION....21
LANGUAGE & INPUT....21
FACTORY RESET....21

MANAGING SYSTEM SETTINGS 22

DATE & TIME 22

MANAGING CONTACTS 23

ADDING A NEW CONTACT 23
VIEWING CONTACT DETAILS 23
SENDING A MESSAGE FROM CONTACTS ... 23
DIALING A NUMBER FROM CONTACTS 23
EDITING THE CONTACT DETAILS 23
IMPORTING SIM CARD CONTACTS TO PHONE 23
EXPORTING PHONE CONTACTS TO SIM CARD 23
EXPORTING PHONE CONTACTS TO STORAGE 24
SHARING CONTACT VIA MMS AND BLUETOOTH 24
MANAGING CONTACT SETTINGS 24
MANAGING PHONEBOOK SETTINGS 24
DELETING A CONTACT 24

MANAGING CALL SETTINGS 25

MAKING A CALL 25
DIALING A NUMBER VIA CONTACT 25
ADDING A CONTACT FROM HOME SCREEN 25
VIEWING CALL HISTORY 25
DELETING CALL HISTORY 25
MANAGING CALL SETTINGS 25
CHANGING RINGTONES AND MASTER VOLUMES 26
SPEED DIAL SETTINGS 26

SENDING MESSAGES 27

SENDING SMS/MMS MESSAGE 27
MANAGING MESSAGE SETTINGS 27

USING THE KEYBOARD 29

ENTER AND EDIT TEXT 29
PHONE DICTIONARIES 29
PERSONAL DICTIONARY 29

PSX PTT SERVICES 29

LAUNCHING PSX PTT APPLICATION 29
<EXTERNAL LINK - MSI WEBSITE> 29

SONIM SETUP WIZARD 30

USING APPLICATIONS 30

CAMERA 30
CALENDAR 30
CLOCK 31
ALARM 31
STOPWATCH 31
TIMER 31
CALCULATOR 31
SOUND RECORDER 31
MUSIC 31
FILE EXPLORER 32

REGULATORY INFORMATION - USA MARKET 33

RF EXPOSURE INFORMATION (SAR) 33
FEDERAL COMMUNICATION COMMISSION INTERFERENCE STATEMENT 34
FCC CAUTION 34
ISED RF EXPOSURE STATEMENT (IC) 34
HAC RATING 34

HAZARDOUS LOCATION USAGE WARNING 36

INDEX 37

SAFETY GUIDELINES

Please read and understand the following safety guidelines before you use the phone. These guidelines provide details to enable you to operate your phone safely and conform to any legal requirements regarding the use of cellular phones.

Do not to use the phone at a refueling point. Observe restrictions when using radio equipment at fuel depots, chemical plants or where blasting operations are in progress.

Electrical interference may obstruct the use of your phone. Observe restrictions in hospitals and near medical equipment.

Switch off your cellular phone when in an aircraft. Wireless phones can cause interference or danger to an aircraft. In an aircraft, the phone can be used in flight mode.

Do not expose the device to high temperatures (in excess of 55°C).

Adhere to road safety laws. Do not hold/ use a phone while you are driving; find a safe place to stop first. Use hands-free microphone while you are driving.

Avoid using the phone in close proximity to personal medical devices, such as pacemakers and hearing aids.

Use only Sonim XP5800 approved charging equipment to charge your phone and avoid damage to your phone.

The symbol of the crossed-out wheeled bin indicates that this product, and any enhancements marked with this symbol, cannot be disposed as unsorted waste but must be taken to separate collection at their end-of-life.

Ensure that only qualified personnel install or repair your phone.

The Sonim XP5800 is water-proof and can be submerged to 2 meters for 30 minutes.

Ensure to close the audio connector and SIM slot properly. This will prevent the deposit of water droplets on the connectors, when the phone is immersed in water.

Water droplets may condense under the display cover if the phone is immersed in water with significant drop in temperature. This does not indicate water leakage. The droplets will disappear at room temperature.

The Sonim XP5800 is dust-resistant, rugged and shock-resistant. However, it is not dust-proof or unbreakable if subjected to overwhelming impact. For best results and long product life, one should protect the Sonim XP5800 from salt water, dust and strong impacts.

AVOID HIGH TEMPERATURES

Leaving the device in hot or cold places, such as in a closed car in summer or winter conditions, reduces the capacity and lifetime of the battery. For the best results, try to use the device between -20°C and +55°C (-4°F and 131°F). A device with a hot or cold battery may not work temporarily, even when the battery is fully charged. Battery performance is particularly limited in temperatures well below freezing.

PERSONAL MEDICAL DEVICES

Mobile phones may affect the operation of cardiac pacemakers and other implanted equipment. Please avoid placing the mobile phone over the pacemaker, for example in your breast pocket. When using the mobile phone, place it at the ear opposite the pacemaker. If a minimum distance of 15 cm (6 inches) is kept between the mobile phone and the pacemaker, the risk of interference is limited. If you suspect that interference is taking place, immediately turn off your mobile phone. Contact your cardiologist for more information. For other medical devices, consult your physician and the manufacturer of the device. Comply with instructions to switch off the device or deactivate the RF transmitter when required, especially when posted in hospitals and airplanes. Equipment used in these places may be sensitive to radio waves emitted from the device and adversely affect their operation. Also, observe restrictions at gas stations or other areas with flammable atmosphere or when close to electro-explosive devices.

CHILD SAFETY

Do not allow children to play with your mobile phone or its accessories. Keep it out of their reach. They could hurt themselves or others, or could accidentally damage the mobile phone or accessories. Your mobile phone and its accessories may contain small parts, which could be detached and create a choking hazard.

EMERGENCY CALLS

Mobile phones operate using radio signals, which cannot guarantee connection under all conditions. Therefore you should never rely solely upon any mobile phone for essential communications (e.g. medical emergencies). Emergency calls may not be possible in all areas, on all cellular networks, or when certain network services and/or mobile phone features are in use. Check with your local service provider.

WARNING

It is not allowed to connect any external devices to all ports/interface (USB, XPand and SecureAudio Connector) in Hazardous area.

BATTERY USAGE

Sonim XP5s phone comes with a removable battery. For any battery related queries, contact Sonim customer support.

- Use only a Sonim XP5800 certified battery that is designed for this phone model.
- The use of other batteries may void the warranty terms of your phone and cause damage.
- It is recommended to protect the battery from extreme temperature environments and moisture.
- Please keep the battery out of the reach of children.

INSERTING THE BATTERY

1. **UNSCREW COVER**

   To open the battery cover, rotate both the battery cover screws in a counter clockwise direction (as shown in the figure). Sometimes, the battery cover may be tight and some extra effort is required to open it. You can use the screwdriver provided to open the screws.

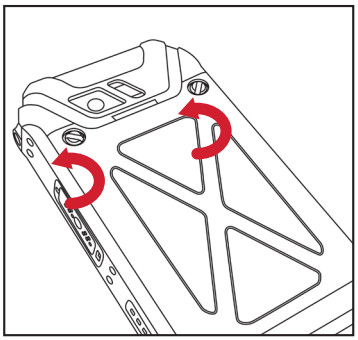

2. **LIFT THE COVER**

   Lift the back cover to reveal the battery slot.

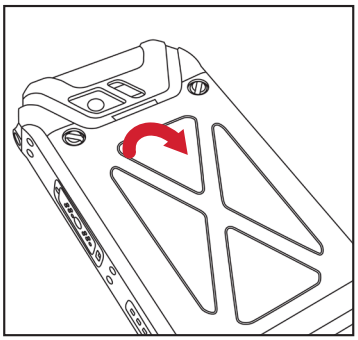

3. INSERT BATTERY

Insert the battery and flush into the battery slot such that the three metallic contacts at the top of the battery are aligned with the metallic contacts within the battery compartment.

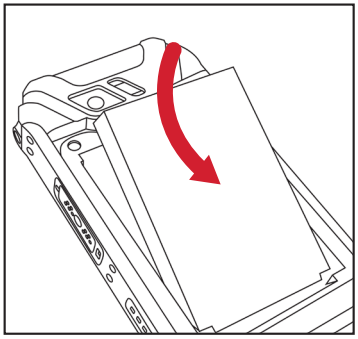

4. CLOSE COVER

Close the battery cover. Rotate the battery cover screws in clockwise direction. You can use the screwdriver provided to tighten the screws. Ensure not to over-tighten the screws.

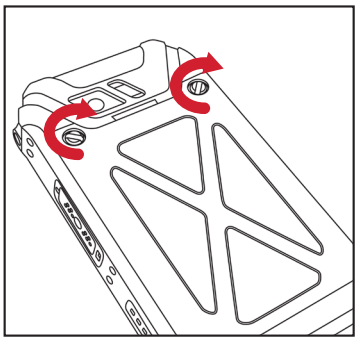

1. INSERT CHARGER

Insert the charger plug into a power outlet.

2. CONNECT TO THE PHONE

The charging port is located in the lower side of the phone, below the back cover. Insert the charger connector to the charging port.

3. CHARGING ANIMATION/ICON

- If the battery is being charged when the phone is switched off, a battery charging animation with current battery level is displayed.
- If the battery is being charged while the phone is switched on, the battery icon on the status bar shows the animation indicating that the battery is being charged.
- After the battery is fully charged the charging animation stops and you can disconnect the charger from the phone.

CHARGING THE BATTERY

The battery delivered with your mobile phone is not fully charged. We recommend that you charge your mobile for 5 hours before you use your mobile phone for the first time.

Only the power supplies with outputs meet the SELV requirements can be used for charging. The maximum allowable input voltage for the phone is 9v.

There is a risk of explosion while charging if the battery has been replaced by an incorrect type.

If the battery is completely out of charge, it can take several minutes for the charging icon to appear when the charger is connected.

YOUR SIM CARD

Purchase a SIM card from a mobile operator. The SIM card associates your network services (for example, phone number, data services, and so on) with your phone.

REMOVING THE BACK COVER

1. UNSCREW COVER

To open the battery cover, rotate both the battery cover screws in counter clockwise direction (as shown in the figure).

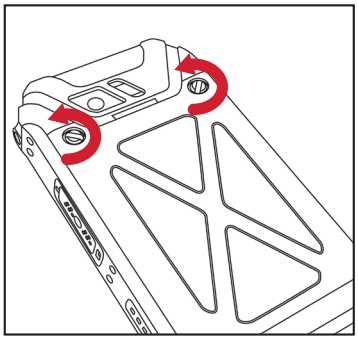

2. LIFT THE COVER

Lift the back cover to reveal the battery slot.

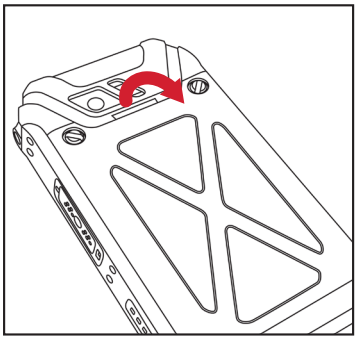

3. USE SONIM SCREWDRIVER

You can use the Sonim provided screwdriver tool to open the screws.

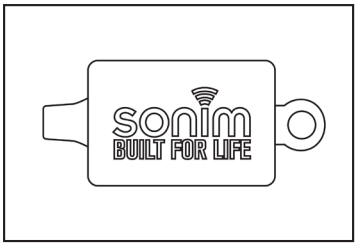

REMOVING THE BATTERY

1. UNSCREW COVER

To open the battery cover, rotate both the battery cover screws in an counter clockwise direction (as shown in the figure).

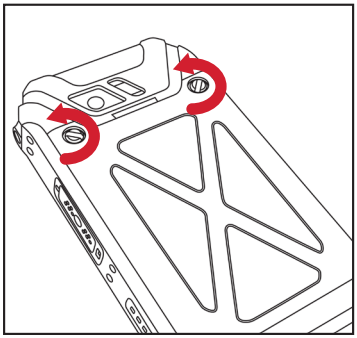

2. LIFT THE COVER

Lift the back cover to reveal the battery slot.

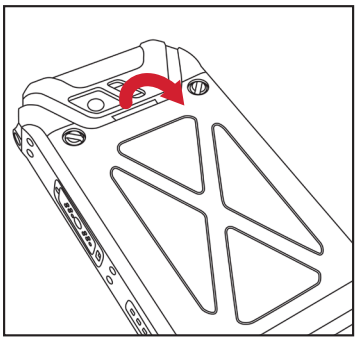

3. USE SONIM SCREWDRIVER

You can use the Sonim provided screwdriver tool to open the screws.

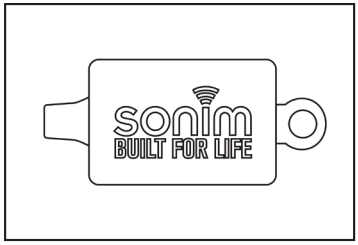

INSERTING MEMORY CARD

1. SLIDE THE SILVER CLIP

Slide (push forward) and lift the silver clip over the designated slot located below the SIM card slot. (as shown in the figure).

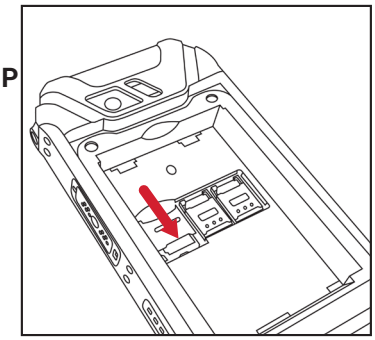

2. PLACE THE MEMORY CARD

Place the memory card in the designated slot and close the silver cup. (as shown in the figure).

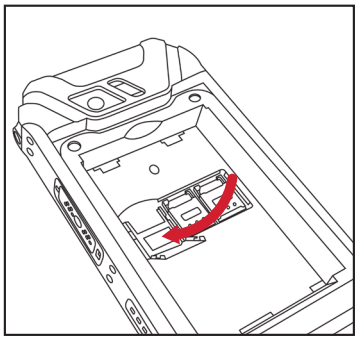

3. USE SONIM SCREWDRIVER

You can use the Sonim provided screwdriver tool to open the screws.

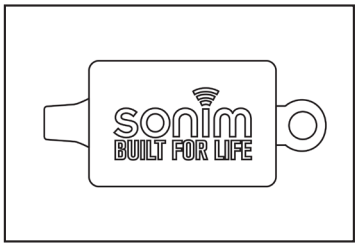

DISPOSAL OF BATTERY

Please check local regulations for disposal of batteries. The battery should never be placed in municipal waste. Use a battery disposal facility if available.

WARNING

ONLY THE BATTERY CAN BE REPLACED in NON-HAZARDOUS LOCATION.

VERIFYING AND OPTIMIZING BATTERY USAGE

You can check the battery usage status and also close some applications to save battery power. In the all application screen, select **Settings** ( ) > **Device** > **Battery** ( ).

The current battery level (charging or not charging) is displayed on the top of the screen. The discharge graph on the top of the screen shows the battery level over time since you last charged the device, and how long you have been running on battery power.

The list at the bottom of the screen shows the breakdown of battery usage for individual apps and services. Touch any listed items for more details. The details screen for some apps includes buttons that allow you to adjust settings affecting power usage, or stop the application completely.

If you stop some apps or services, your device may not work correctly.

TIPS TO EXTEND THE BATTERY LIFE

Follow these tips to extend your phone's battery life.

- If you are not using Wi-Fi, Bluetooth, or GPS, use the **Settings** to turn them off. The GPS setting is located in **Settings** > **Personal** > **Location**.
- Set screen brightness to **Low** and set a shorter Sleep timeout (15 seconds). The display settings are located in **Settings** > **Device** > **Display**.
- If you are travelling and do not have access to mobile data or Wi-Fi network, switch to Airplane mode. Select **Airplane mode** from **Quick Settings**.

GETTING STARTED

WHAT IS IN THE BOX ?

The list of items in the Sonim XP5s phone box are:

- Sonim XP5s
- Battery
- Wall Charger
- USB-C Cable
- Screwdriver
- Quick Start Guide

PHONE SPECIFICATIONS

FEATURE	DESCRIPTION
Chipset	Qualcomm MSM8920
Band	**GSM:** 850/900/1800/1900MHz **UMTS:** I/II/IV/V/VIII **LTE:** B1/B2/B3/B4/B5/B7/B8/B12/B13/B14/B25/B26/B28/B30/B38/B41/B66
Antenna	MIMO antenna for LTE
Wi-Fi	Support 802.11 a/b/g/n/ac/e/k/r/h Support max 10 connections hotspot
Memory	16GB eMMC + 2GB DDR
CONNECTIVITY	
Bluetooth	BT4.x with BLE
SMS/MMS	BLESupport SMS and MMS
GPS	GPS/aGPS, GLONASS, BDS
Languages Supported	English and Spanish
Capacity(mAh)	3180mAh, removable Li-ion
Battery Life	Standby: up to 267 hours Talk time: up to 19 hours Music playback: up to 59 hours Video playback: up to 8.5 hours Web browsing: up to 7.5 hours
PHYSICAL CHARACTERISTICS	
Ambient temperature	-20ºC to +55ºC

FEATURE	DESCRIPTION
Protection Class	IP-68, 2meters for 1 hour
Size	141mm x 63.9 mm x 23mm
Weight	approx. 248 gms
Dedicated keys	PTT Key/Alarm Key/Power Key
Ports	Water-proof USB2.0 type-C, High Speed, OTG
DISPLAY	
Size	2.64”
Resolution	432x320 Transmissive, 350 nits Brightness
Outdoor Visibility	Yes
Capacity	262 K colors
AUDIO	
Microphone	3 Mics with noise cancellation
Speaker	Front Dual Loud Speaker, Support HD voice and wideband
MULTIMEDIA	
Audio Formats	AMR-NB, AMR-WB, AAC, AAC+, AAC+V2, MP3,V-SELP, AMR 12.65, AMR 6.6, WAV
Video Formats	3GP,MP4, WMV, AVI, MOV, MPEG-2, MPEG-4,H.263, H.264
FM Radio	Yes
Camera	5MP FF Rear camera, No front camera
LED Torch Light	Yes, also used for camera flash

USING YOUR SONIM XP5s

1. Sonim XPand Connector
2. Microphones
3. USB-C
4. Volume Up / Down
5. PTT Button
6. App Tray
7. Options
8. Clear
9. Answer / Accept
10. Voicemail (Press and Hold)
11. Lock Keypad (Press and Hold)
12. Select /Center key
13. Navigation
14. End / Reject / Power On & Off (Press and Hold)
15. Speakerphone
16. Back
17. Display
18. Battery Level Indicator
19. Notification Bar
20. Receiver
21. LED Notification
22. Sonim SecureAudio Connector
23. Emergency Button
24. Charging Pins
25. Battery Under Door
26. SIM Card Slots Under Battery
27. Memory Card Slot Under Battery
28. Battery Door
29. Rear Flash
30. Rear Facing Camera

SWITCHING ON THE PHONE

Press and hold **ON/OFF** Red button for 2 seconds.

When the phone is switched on, it tries to register with the network. After successful registration, the name of the service provider is displayed.

> Ensure that a valid SIM card is inserted in your phone.

SETTING UP YOUR PHONE

For instructions on using your phone's buttons, charger, battery, and other hardware features, check the printed Quick Start Guide provided along with your phone.

When you power **ON** the phone for the first time, a Welcome screen is displayed.

To set up your phone, select Start and follow the instructions as shown on the screen.

Press **OK** on welcome guide to use the phone.

MANAGING HOME SCREEN

After you complete the phone setup, the home screen is displayed. The home screen is the beginning point to access all the device's features.

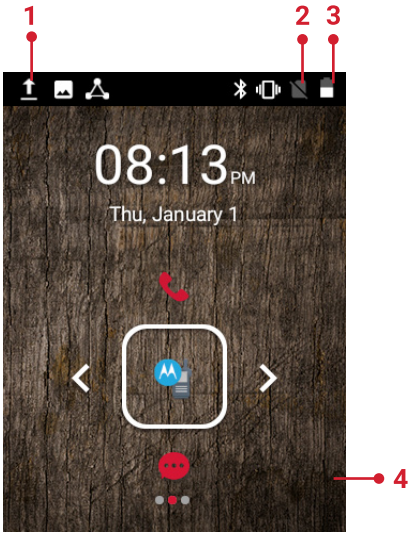

1. Message/Alert Notifications
2. Service Indicator and Signal Strength bar
3. Battery charge indicator and time
4. Home screen

KEY DESCRIPTION

The navigation keys are located below the display screen.

KEYS	DESCRIPTION
	Back: Opens the previous screens in the working sequence till the home screen is displayed. Once the home screen is displayed, it remains there even when you press the back key.
	Menu: Moves the current working application to the recent applications list/background and displays menu screen.
	Options: displays the options for the currently active screen.
C	**Clear:** Clears the entered text and deletes the selected file.
	Torch: Enables the flashlight.

The **Menu** option ( ) is always positioned in the center of the favorites tray. Select it to view all the applications.

The **Notifications** on the top of the display screen provides details about various notifications such as missed calls, new messages and missed alarms.

The **System Icons** on the right display the current device status such as wireless and network connection strength, battery level and time.

NOTIFICATION BAR ICONS

The icons displayed at the top of the screen provides information about the status of the device. The details such as date and time, battery charge status, and data service are displayed when the phone is in standby mode. Other indicators such as Bluetooth connectivity status, airplane mode, alarm and call forward (only if Always forward is enabled) and Wi-Fi connectivity are displayed, if the feature is activated.

ICONS	DESCRIPTION
	Notification icon
	Battery level indicator
	Battery charging in progress
	No signal
	Signal strength
	No SIM card
	Roaming
	4G LTE network connected
	Wi-Fi connected
	Bluetooth activated
	Call in progress
	FM Radio
	Missed call
	New SMS or MMS
	Alarm activated
	Silent mode activated
	Vibration mode activated

ICONS	DESCRIPTION
	Flight mode activated
	Error/information notification - attention required
	Screenshot captured
	Music is played
	Device storage space is running out
	Stealth Profile

PHONE OPERATIONS WITHOUT SIM CARD

You can perform the following operations without inserting a SIM card in your phone.

- Make an emergency call.
- View and modify all settings except few data usage and mobile network related settings.
- Activate and share files through Bluetooth.
- Access the Internet using Wi-Fi conectivity.
- Access your phonebook, myfiles multimedia files,all tools and applications.
- View and modify your profile settings.

SETTING UP AND USING LOCK SCREEN

You must lock your phone to protect it from unauthorized access.

- From Home screen, select **Options key > System settings** or select **Menu > Settings** ( ).
- Scroll down and select **Security** ( ) , located under **Personal** settings.
- Select **Screen lock** and select one of the following options to configure phone:
  - None
  - Press and hold * key.
  - **PIN:** When enabled, enter you own PIN value. When the phone is locked, unlock it using the PIN.

When the phone screen is locked, you can answer an incoming call, without unlocking the screen.

CHANGING THE WALLPAPER

You can set an image or a photo stored in your phone as your home screen wallpaper. To change the wallpaper, select from one of the following Wallpaper collections.

- From Home screen, press **Options key > Wallpaper**. Select **wallpaper** from the popup.
- **Gallery:** includes photos and screenshots taken using the phone's camera.
- **Wallpapers:** includes images that are pre-loaded with the phone.

TAKING A SCREENSHOT

You can take the screenshot of the current screen and it is stored in your phone's gallery. To take a screenshot:

1. Ensure that the image to be captured is displayed on the current screen.
2. Press the **Power** and **Volume** down button simutaneously. The screenshot is captured and stored in the gallery. A screen **Capture** ( ) icon is also displayed on the notification bar.

TEXT ENTRY OPTIONS

When you enter the text message, you can change the text entry options by pressing the # key. The current text entry options are displayed in the top bar.

The various text entry options are:

- **ABC:** Enter all the text in upper case.
- **Abc:** Enter the first letter of the sentence in upper case.
- **abc:** Enter all the text in lower case.
- **123:** Enter the numbers.
- **T9ABC:** Enter the text based on the T9 dictionary. All the letters are in upper case (capitalized).
- **T9abc:** Enter the text based on the T9 dictionary. All the letters are in lower case.
- **T9Abc:** Enter the text based on the T9 dictionary. Only the first letter of the paragraph is in upper case (capitalized).

TO ENTER A WORD

1. Start by pressing the numeric keys from 2 through 9 only once for the required letter.
   - Ex 1: To enter the word Good, press 4-6-6-3. The word displays on the screen as you type.
   - Ex 2: To enter the word Hello, press 4-3-5-5-6. The word displays on the screen as you type.
2. If the word does not display correctly, press right navigation key to scroll through alternative word choices. Press either the center navigation key or 0 key to accept the word.

TO INSERT A NUMBER:

1. Press the key labeled with the number you want and use the navigation key to scroll to that number as above.
2. To insert a symbol, press and hold the numeric key 1 and use the navigation key to scroll and select a symbol.

THE DIFFERENT METHODS TO ENTER TEXT:

- **T9EN:** Enter the text based on the T9 dictionary. All the letters is in upper case (capitalized).
- **T9En:** Enter the text based on the T9 dictionary. Only the first letter of the paragraph is in upper case (capitalized).
- **T9en:** Enter the text based on the T9 dictionary. All the letters are in lower case.

MANAGING WIRELESS & NETWORK SETTINGS

WI-FI NETWORK

Wi-Fi is a wireless network technology that can provide Internet access at distance upto 100 feet, depending on the Wi-Fi router and surroundings.

You can access Internet when you connect your XP5s to a Wi-Fi network. To connect your phone to a Wi-Fi network,

1. From Home screen, select **Menu** ( ) **> Settings** ( ).
2. Set the **Wi-Fi** to **ON** position, located under **Wireless & networks** settings.
3. Select **Wi-Fi**.
   A list of Wi-Fi routers present within your phone's accessible range are displayed.
4. Select your preferred network. Enter the WEP/ WPS/WPA key (if it is a secured network) and select **Connect**. To verify the password before connecting, enable **Show password**.

> It is always recommended to make your Wi-Fi router secure and also to connect your phone to a secure network.

ADDING A NEW NETWORK

1. In **Wi-Fi** settings screen, select **Options key > Add network**.
2. Enter the following details:
   - **Network SSID:** The wireless network ID.
   - **Security:** Set the security type to None, WEP, WPA/WPA2 PSK, 802.1x EAP.
3. Enable **Advanced** to set the Proxy details and IP settings.

CONNECT TO A NETWORK

1. Press and hold the connected network.
2. Select **Connet to network**.
3. Enter the password and get connected to the network.

EDITING A NETWORK

1. Press and hold the connected network.
2. Select **Modify network**. You cannot change the network password. The other network setting details such as **Advanced options**, **Proxy**, **IP settings** can be updated.
3. Select **Save** to save the changes.

FORGETTING A NETWORK

1. Touch and hold the connected network.
2. Select **Forget network**.
   The selected network gets disconnected and displayed in the Wi-Fi list.
   If you have to get connected to the same network, enter password.

ADVANCED WI-FI

On the Wi-Fi screen, select **Option key > Advanced.** The following options are displayed:

- **Install certificates:** You can select the certifiaction by browsing.
- **Passpoint on:** You can enable the option.
- **Wi-Fi Direct:** Select **Option key > Searching** to search for the peer devices and also select **Rename device** to rename the device.
- **WPS Push Button:** Press the **WPS Push Button** in your router, when prompted.
- **WPS Pin Entry:** Enter the given PIN number on your Wi-Fi router.

BLUETOOTH DEVICES

Bluetooth is a short-range wireless communication technology used to communicate between the devices over a distance of about 8 meters.

You can perform the following tasks using Bluetooth paired devices.

- Transfer media files and contacts between connected mobile devices using Bluetooth.
- Access the Internet through a Bluetooth device that is connected to a Wi-Fi router.
- Use Bluetooth connected headphones for playing media file.

PAIRING A BLUETOOTH DEVICE

To activate Bluetooth and pair your XP5s phone with other Bluetooth devices:

1. From Home screen, select **Menu** ( ) **> Settings** ( ).
2. Enable **Bluetooth** ( ), located under **Wireless & Networks** settings.
   A list of accessible Bluetooth devices are displayed. Ensure that Bluetooth is activated on the other device too.
3. Select your preferred device.
4. Confirm the pass key in the other device and

select **Pair** in your phone. The device is displayed in the Paired devices list.

EDITING PAIRED BLUETOOTH DEVICE SETTINGS

1. Press **Option** key on preferred paired Bluetooth device.
2. Select **Rename this device** to rename the paired Bluetooth device.
3. Select **Unpair** to remove the device from your paired list.
4. Enable **Media Audio** to connect the Bluetooth device for listening to media files.
5. Enable **Internet access** to use the paired Bluetooth device to access the Internet.

SIM CARDS

DATA USAGE

Data usage refers to the amount of data utilized by your phone during data transfers through the Internet. The data usage charges are dependent of the wireless plan provided by your service provider.

To monitor your data usage, adjust your data usage settings.

1. From Home screen, select **Menu** ( ) **> Settings** ( ).
2. Tap on **Data usage** ( ), which is located under **Wireless & networks** settings.
3. Turn on Cellular Data to access Internet using your cellular network
4. Enable Set cellular data limit to preset your data usage limit and to set an alert before reaching the preset limit.
5. Drag the orange bar to set the Data usage limit. Cellular data will get disabled once you reach this limit. You will not be able to access the Internet. You receive a notification once you reach the set data usage limit.
6. Drag the black bar to set data usage warning so that you will get an alert before reaching your set data usage limit.

MORE

ACTIVATING AIRPLANE MODE

When your phone is set in airplane mode, network connectivity or mobile data connectivity is disabled. But you can access your camera, medial files and other features that do not require mobile connectivity.

To activate airplane mode:

1. From Home screen, select **Menu** ( ) **> Settings** ( ).
2. Select **More** located under **Wireless & networks** settings.
3. Enable **Airplane mode**.

CELLULAR NETWORKS

You can view and set your mobile service provider settings.

Following are the options:

1. From **Home** screen, select **Menu** ( ) **> Settings** ( ) > More.
2. Select **Cellular networks**.
3. Enable **Enchanced 4G LTE Mode** to improve the voice and other commnication quality.
4. Enable **Data roaming** to have network connectivity when you are in a roaming network.
5. Select **Cellular Network Setting** under **Cellular Network**.
6. Select **Access Point names** to view and edit the network access points.
   - Select **Options > New APN** to add a new access point.
7. Choose the **Network operators** from the available list.

NETWORK SETTINGS RESET

1. From **Home** screen, select **Menu** ( ) **> Settings** ( ).
2. Select **Wireless & Networks > More > Network settings reset.**
3. Select **RESET SETTINGS.**
   It reset all the network settings including Wi-Fi, Cellular data , and Bluetooth.

VOICE NOISE CANCELLATION

By default, FENS is enabled and reduces the noise cancellation.

MANAGING DEVICE SETTINGS

DISPLAY

1. From **Home** screen, select **Menu** ( ) > **Settings** ( ) > **Device** > **Display** (.
2. Set one of the following options to configure your phone's display:
   - **Brightness:** Set the brightness of the phone display. This also optimizes the battery power consumed.
   - **Wallpaper:** Set the wallpaper for your home screen. You can select from one of the following wallpaper collections:
     - **Gallery:** includes photos and screenshots taken using the phone's camera.
     - **Wallpapers:** includes images that are pre-loaded with the phone.
   - **Sleep:** Set the sleep time so that the screen brightness is turned down after specified time of phone inactivity. This setting also optimizes the battery power.
   - **Font size:** Set the font size of the text displayed in the screen.

PROFILES

1. From **Home** screen, select **Menu** ( ) > **Settings** ( ) > **Device** > **Profile** ( ).
2. Select any one of the options from the below list:

OPTION	DESCRIPTION
1. **Standard**	Set to **Standard** and select **Option key** > **Edit**. The following options are displayed:
Sound	• You can set Media volume, Ring volume, Alarm volume, Phone ringtone, Default notification ringtone. • You can enable the **Vibrate when ringing.**
Other Sounds	You can set **Screen lock sounds**, **Charging sounds**, and **key press tones**.
Notification	• If Pulse LED light is enabled, battery status indication is not affected. • If Flash notification alert is enabled, when battery is above 20% level, you can use camera flash ligt for missed events. • If Flash call alert is enabled, you can use Flash cameralight for incoming voice call.
2. **Outdoor**	Set to **Outdoor** and select **Option key** > **Edit**. The following options are displed:
Sound	• You can set Media volume, Ring volume, Alarm volume, Phone ringtone, Default notification ringtone. • You can enable the **Vibrate when ringing.**
Other Sounds	You can set **Screen lock sounds**, **Charging sounds**, and **key press tones**.
Notification	• If **Pulse LED light** is enabled, battery status indication is not affected. • If **Flash notification alert** is enabled, when battery is above 20% level, you can use camera flash ligt for missed events. • If **Flash call alert** is enabled, you can use Flash cameralight for incoming voice call.
3. **Silence**	Set to **Silence** and select **Option key** > **Edit**. The following options are displayed:
Sound	When set to **Silence** mode, this profile blocks all sounds and vibrations includin alarms, videos, and games. You wil lbe able to make phone calls.

Notification	• If **Pulse LED light** is enabled, battery status indication is not affected. • If **Flash notification alert** is enabled, when battery is above 20% level, you can use camera flash ligt for missed events. • If **Flash call alert** is enabled, you can use Flash cameralight for incoming voice call.
4. Meeting	Set to **Meeting** and select **Option key > Edit**. The following options are displayed:
Sound	• You can set Media volume, Ring volume, Alarm volume, Phone ringtone, Default notification ringtone. • You can enable the **Vibrate when ringing.**
Other Sounds	You can set **Screen lock sounds**, **Charging sounds**, and **key press tones**.
Notification	• If **Pulse LED light** is enabled, battery status indication is not affected. • If **Flash notification alert** is enabled, when battery is above 20% level, you can use camera flash ligt for missed events. • If **Flash call alert** is enabled, you can use Flash cameralight for incoming voice call.

QUICK PROFILE SWITCH

Profile switch:

1. From Home screen, select **Menu** ( ) **> Settings** ( ) **> Device > Profile** ( ).
2. Select **Profile Switch**.
   You can use this option to quickly switch profiles through homescreen shortcut.

APPS

1. From Home screen, select **Menu** ( ) **> Settings** ( ) **> Device > Apps** ( ).
2. Select **All apps** drop-down list. you can select any of the following options:
   - All apps
   - Enabled
   - Disablde
3. Select the required app from the list. Open the app and select **FORCE STOP**.
4. Select the app and press **Options** key. The following options are displayed:
   - Advanced
   - Show system
   - Reset app preference

USB POWER SAVING

1. From Home screen, select **Menu** ( ) **> Settings** ( ) **> Device > USB Power Saving** ( ).
2. **Automatic Power ON:** If enabled, the device gets automatically power **ON** when the USB is connected.
3. **Automatic Power OFF:**
   - **Automatic Power OFF:** If enabled, the device gets automatically power **OFF** when the USB is connected.
   - **Power off device at:** If you enable **Automatic power off**, this option will be active. You can set the time for the device to be power off.
   - **Automatics power OFF:** If this is enabled, upon USB disconnection, the device is power off after the set hours.
   - **On USB disconnect, power off:** You can set the hours for the device to be powered off once the USB is disconnected.

STORAGE

1. From Home screen, select **Menu** ( ) **> Settings** ( ) **> Device > Storage** ( ).
2. On **Internal shared storage**, the following options are displayed with memory used for each app:
   - Shows the used memory
   - Apps
   - Images
   - Videos
   - Audio
   - System
   - Other
   - Cached data
   - Explore

BATTERY

1. From Home screen, select **Menu** ( ) **> Settings** ( ) **> Device > Battery** ( ).
2. Set the Battery saver ON by selecting the option given for **Turn on automatically**:
   - Never
   - at 5% battery
   - at 15% battery

> Battery saver turns off automatically when your device is charging.

You can also view the battery usage data.

MEMORY

1. From **Home** screen, select **Menu** ( ) **> Settings** ( ) **> Device > Memory (** **)**.
2. Go to **App usage** and select the time from the drop-down list. You can view the applications usage based on the set time frame.
3. Select **Memory used by apps** to check the memory used for each application for the set time frame.

GESTURES

1. From **Home** screen, select **Menu** ( ) **> Settings** ( ) **> Device > Gestures (** **)**.
2. Enable **Toggle Torch**.
3. To quickly toggle torch, shake the device twice.

MANAGING PERSONAL SETTINGS

HOME SCREEN SHORTCUTS

You can set the shortcuts on the home screen.

1. From **Home** screen, select **Menu** ( ) **> Settings** ( ) **> Personal**.
2. Select **Home screen shortcuts** ( ).
3. Go to the **Navigation up key** and selct the app to be set for the up key navigation.
4. Go to the **Navigation center key** and selct the app to be set for the center key navigation.
5. Go to the **Navigation down key** and selct the app to be set for the down key navigation.

EMERGENCY INFO

You can enter the emergency information to be viewed during an emergency.

1. From **Home** screen, select **Menu** ( ) **> Settings** ( ) **> Personal**.
2. Select **Emergency Info** ( ).
3. Go to **My information** and enter the following details:
   - First name
   - Last name
   - Phone number
   - Email address
   - Address
   - Blood type
   - Allergies
   - Medication
   - Organ donor
4. If you do not want to enter any of the above details, select **Skip**.
5. Go to **Add** and you can select the contact from the the phonebook by selecting **Select contact**.
   OR
6. Select **Add > Add new**. Add **First name**, **Last name**, and **Phone number**. Selcet **Add**.
   Ths contact is added under Emergency contacts list.

LOCATION

You can enable and configure the Location settings.

1. From **Home** screen, select **Menu** ( ) **> Settings** ( ) > **Personal.**
2. Select **Location** ( ). Enable and modify required security settings.
3. Enable **Location**.
4. Set the **Location Mode** to one of the following options:
   - **High accuracy:** uses AGPS, Wi-Fi, mobile networks, and other sensors to get the highest-accuracy location for your device. It uses location services to help estimate your location faster and more accurately.
   - **Battery saving:** allows your device to estimate your location using low battery-intensive location sources, such as Wi-Fi and mobile networks. It uses location services to help estimate your location faster and more accurately.
   - **Device only:** allows your device to estimate your location using GPS only. It uses the satellite information to provide location information. This mode may use more battery power and take longer to determine your location.
5. You can also view the apps which have requested location recently under **Recent location requests**.

SECURITY

You can activate and protect your phone from unauthorized access by configuring the security settings.

1. From **Home** screen, select **Menu** ( ) **> Settings** ( ) > **Personal**.
2. Select **Security** ( ).
3. Select **Device security > Screen lock** and select one of th efollowing options to configure the phone:
   - None
   - Press and hold * key
   - **PIN:** When enabled, enter you own PIN value. When the phone is locked, unlock it using the PIN.
   When the phone is locked, you can answer an incoming call, without unlocking the phone.
4. **Encryption:** By default, the phone is already encrypted.
5. Enable **Passwords > Make password visible** to the password characters.
6. **Device administration:**
   - **Device administrators:** You can view or deactivate the device administrator.

- **Unknown resources:** When enabled, it allows installing the apps from unkonwn sources.

7. **Credential storage:**
   - **Storage type:** Displays the storage type.
   - **Trusted credentials:** You can view and verify the system and user certificates.
   - **Install from SD card:** You can view and install new user certificates from SD card.
   - **Clear credentials:** You can remove all certificates.
8. **Advanced:**
   - **Trust agents:** To use this option, a screen lock should set.
   - **Apps with usage access:** Select the app and select center key to enable the **Permit usage access.**

LANGUAGE & INPUT

You can set the phone's language to any of the languages displayed in the language list.

1. From **Home** screen, select **Menu** ( ) **> Settings** ( ) > **Personal**.
2. Select **Langauage & input** ( ).
3. Go to **Languages** and select any language from the list as your preferred language.
   The following languages can be set as a preferred language:

   - English
   - Espanol

   All the menu items and user feedback messages will get displayed in the set language.

4. Select **Keyboard & input methods > FlexT9 Text Input**.
   - **Input language:** You can set the input language to either **English** or **Espanol**.
   - **Personal Dictionary:** The default keyboard input language is set to English (US)/Spanish (US) - T9 format. This cannot be modified.
   - **Preferences:**
     - **Auto-capitalization:** The first letter of the new sentence is automatically capitalized.
     - **Auto-punctuation:** If this option is enabled, when you press the space key twice at the end of the word to insert a period.
     - **Language switch key:** Press and hold the * key to switch the language.
     - **New Word Prediction:** Predeicts a new word based on the previous word entered.
     - **Suggest contact names:** Displays suggested contact while typing.
5. Select **Supprt > FlexT9 Help**.It displays FlexT9 help guide.

   Select **Support > About.** It displays the FlexT9 version details.

6. Select **Speech > Text-to-speech output**. You can set and reset the **Speech rate** and **Speech Pitch**.

FACTORY RESET

You can erase all the data from your phone's internal storage.

1. From **Home** screen**,** select **Menu** ( ) **> Settings** ( ) > **Personal**.
2. Select **Fatory Reset** ( ).
3. You can rase all data from your phone's internal storage which includes;
   - System and app data and settings
   - Downloaded apps
   - Music
   - Photos
   - Other user data

MANAGING SYSTEM SETTINGS

DATE & TIME

You can set and display the date and time on the phone. You can also select the display format.

1. From **Home** screen**,** select **Menu** ( ) **> Settings** ( ) > **System**.
2. Select **Date & time** ( ).
3. Select the following options to configure phone:
   - To synchronize the date and time with the network provided time, enable **Automatic date & time**.
   - To synchronize the time zone with the network provided time enable, **Automatic time zone**.
   - To set the date manually, select **Set date**. Scroll and select the date, month and year. Select **Done**.
   - To set the time manually, select **Set time**. Scroll and select the hour and minute. Select **Done**.
   - To set the time zone, select Select **time zone**. Scroll and select your time zone.
   - To set the clock to 24-hour format enable **Use 24-hour format**. By default, the phone is set to **12-hour format**.

ACCESSIBILITY

You can make websites and applications more accessible to people with disabilities when they are using mobile phones and other devices.

1. From **Home** screen**,** select **Menu** ( ) **> Settings** ( ) > **System**.
2. Select **Accessibility** ( ).
3. Select **Services.**
   - **AetherPal MSM:**
   - **Talkback:** When Talkback is enabled, it helps vision-impaired users interact with their devices. It uses spoken word, vibration and other audible feedback to let you know what's on your screen, what you're touching, and what you can do with it.
4. Select **System**.
   - **Captions:** When Captions is **ON**, you can set the following options under **Standard options**:
     - Language
     - Text size
     - Caption style
   - **Font size:** You can set the font size from smaller to bigger and see the preview of the same.
   - **High contrast text:** If this option is enabled, you can see the text changes into the contrast colors.
   - **Mono Audio:** Enable **Mono audio** to combine the channels when playing audio.
   - **Sound balance:**
   - **Accessibility shortcut:** When set to ON, you can have a shortcut on the home screen.
   - **Text-to-speech output:**
     - **Preferred engine:** The preferred engine is set.
     - **General:** You can adjust the **Speech rate** and **Pitch.** Reset the speech rate and speech pitch. You can demonstrate a speech synthesis. English is set as default language status.
   - **Press & hold delay:** You can set the duratin of press & hold delay:
     - Short
     - Medium
     - Long

ABOUT PHONE

1. From **Home** screen**,** select **Menu** ( ) **> Settings** ( ) **> System**.
2. Select **About phone** ( ).
3. Go to **Software Update** and **Check for Updates**. If there is any updates, it starts updating.
4. The following information is displayed:
   - Status
   - Legal Information
   - Model
   - Firmware version
   - Firmware security patch level
   - Baseband version
   - Kernel version
   - Build number

MANAGING CONTACTS

You can use the phonebook to maintain phone numbers of your contacts. This feature enables you to add, dial phone numbers and send SMS and MMS messages.

To access the contacts, from **Home** screen, select **Contacts** ( ). The contacts saved in the phonebook are displayed.

ADDING A NEW CONTACT

1. To add a new contact, select **Menu > Contacts > Add contact**. Enter the contact details and select **Option key > Save** to save the contact.
2. You can also enter a number using dialpad and select **Add to contact** ( ) and then **Create new contact** ( ) to add a new contact. Select **Option key > Save** to save the contact.

VIEWING CONTACT DETAILS

1. From **Home** screen, select **Menu** ( ) **> Contacts** ( ).
2. Scroll to the required contact and select the contact to view the contact details.

SENDING A MESSAGE FROM CONTACTS

You can send SMS and MMS messages to te contacts.

1. From **Home** screen, select **Menu** ( ) > **Contacts** ( ).
2. Scroll to the required contact and open it.
3. Select **Option key > Send message**.
4. Enter the message and select **Option key > Attach photos/videos** to attach the photos and videos.
5. Select **Option key > Send**.

If you attach a media file or a contact to your SMS message it is converted to an MMS message automatically.

DIALING A NUMBER FROM CONTACTS

1. From **Home** screen, select **Menu** ( ) **> Contacts** ( ).
2. Scroll to the required contact and select the contact to view the details.
3. Select the number and press **Center** key initiate the call.
4. Select the required contact from the list and press the green button on the phone to initiate the call.

EDITING THE CONTACT DETAILS

1. From **Home** screen, select **Contacts** ( ).
2. Scroll to the required contact and select the contact to view the details.
3. Select **Option key > Edit.**
4. Edit the required details. Select **Option key > Save** to save the details.

IMPORTING SIM CARD CONTACTS TO PHONE

1. From **Home** screen, select **Menu** ( ) **> Contacts** ( ).
2. Select **Option key > Import/export.**
3. Select **Import from SIM card.**
   The list of contacts stored in your SIM card are displayed.
4. Select the contact to be moved to the phone.
5. Select **Option key > Done**.
6. A confirmation message is displayed. Select **OK** to confirm.

   The contact is imported to the phone address.

EXPORTING PHONE CONTACTS TO SIM CARD

1. From **Home** screen, select **Menu** ( ) **> Contacts** ( ).
2. Select **Option key > Import/export.**
3. Select **Export to SIM card**.
4. Select the contact to be exported from Phone to SIM card.
5. Select **Option key > Done**.
   The contact is exported to the SIM card.

EXPORTING PHONE CONTACTS TO STORAGE

1. From **Home** screen, select **Menu** ( ) **> Contacts** ( ).
2. Select **Option key > Import/export.**
3. Select **Export to .vcf file**.
4. Press **Center** key to select the contact to be exported.
5. Select **Option key > Done**.
   A message is displayed to select the source to save the .vcf file.

SHARING CONTACT VIA MMS AND BLUETOOTH

You can send contact information in following 3 ways:

1. From **Home** screen, select **Menu** ( ) **> Contacts** ( ).
2. Scroll to the required contact and select the contact and press **center** key to open the contact details.
3. Select **Option key > Share**. You can use one of the following options to share the required contact:
   - **Bluetooth:** Send the contact details to a Bluetooth device paired with your phone. Select the Bluetooth device to share the contact.
   - **PSX Messenger:**
   - **Messaging:** Send the contact details as a multimedia message to any mobile phone.

MANAGING CONTACT SETTINGS

You can edit and modify ringtone and call receiving settings for individual contacts.

1. From **Home** screen, select **Menu** ( ) **> Contacts** ( ).
2. Scroll to the required contact and select the contact to view the contact details.
3. Select **Options key** and select one of the following:
   - **Set Ringtone** to set a specific ringtone for that contact.
   - Check the option **All calls to voicemail** to forward all incoming calls from that contact to your voice-mail box.

MANAGING PHONEBOOK SETTINGS

You can set the sort list to view the contacts and also the first or last name of the contact to be displayed first.

1. From **Home** screen, select **Menu** ( ) **> Contacts** ( ).
2. Select **Options key > Settings**. Set the following options:
   - **Sort by:** Sort the contact names by first name or last name.
   - **Name format:** Set the contact display name to first name or last name.

DELETING A CONTACT

1. From **Home** screen, select **Menu** ( ) **> Contacts** ( ).
2. Scroll to the required contact and select the contact to view the contact details.
3. Select **Options key > Delete** or press **Clear** ( ) key. The contact is deleted after the confirmation.

MANAGING CALL SETTINGS

MAKING A CALL

1. From **Home** screen, select **Phone** ( ).
   The phone screen with last dialed number, missed calls and received calls are displayed with arrow marks in different colors (missed call - Red, Dialed number - two arrow marks green color, Received call - one arrow mark green color).

DIALING A NUMBER VIA CONTACT

1. From **Home** screen, select **Menu** ( ) **> Contacts** ( ).
2. Scroll to the contact and select the contact. The contact details are displayed.
3. Select the required phone number to call the contact.

ADDING A CONTACT FROM HOME SCREEN

1. From **Home** screen, enter the required number to be dialed.
2. Select **Add to contact** ( )
3. Select **Create new contact** ( ).
4. In the **Add new contact** screen, add the name and other details for the contact.
5. Select **Option key > Save**.
   The contact is saved.

VIEWING CALL HISTORY

1. From **Home** screen, select **Phone** ( ).
2. The **Recent calls** screen displayed with recently called, received, and missed calls.

DELETING CALL HISTORY

1. From **Home** screen, select **Phone** ( ).
2. On the **Recent calls** screen, select **Option key > Delete selected call log**.
3. A confirmation message is displayed to delete the selected call log. Select **Delete** to delete the call log.

   The selected call log is deleted.

MANAGING CALL SETTINGS

You can change the incoming call ringtone, enable vibrate when ringing and enable audible press tone.

To view and modify call settings,

1. From **Home** screen, select **Phone** ( ).
2. On **Recent calls** screen, select **Option key > Call settings**. Different settings are:

QUICK RESPONSES:

When you are not able to answer an incoming call, you can send a quick response to the caller. To view and edit quick responses, select **Call settings > Quick responses**. Select the specific response message to edit. Edit the message and select **OK**.

CALLING ACCOUNT:

- **Setting:**
  - **Display duration:** Set this option to **ON** to keep the screen display on during the call.
  - **Vibrating after connected:** Set this option to **ON** to keep the device vibrating after connected.
  - **Smart-Divert:** Subscription should be activated to process Smart-Divert.

SIP SETTINGS

SIP Accounts:

To add a SIP account and configure your incoming and outgoing preferences:

1. In the **Call settings** screen, select **SIP accounts**.
2. Enable **Receive incoming calls** to answer incoming Internet calls.
   This might reduce your phone's battery life.
3. Select **Option key > Add account** to configure a new SIP account.
4. Enter the following details and select **Option key > Save** to save the account:
   - **Username:** Username to login to SIP account.
   - **Password:** Password to login to SIP account.
   - **Server:** SIP server details.
   - **Optional Settings:** Select to view/modify or hide optional details such as authentication username, display name, outbound proxy address, port number, transport type and Send keep alive options.

USE SIP CALLING

1. Select **Calling accounts > Use SIP calling**.
2. A dialog is open with the following options:
   - **For all calls:** If this option is selected and when the phone is connected to Wi-Fi network or mobile Internet, each dialed call becomes an Internet call.
   - **Only for SIP calls:** If this option is selected, only SIP call can be dialed.

RECEIVE INCOMING CALLS

Enable Receive incoming calls to answer incoming Internet calls.

This might reduce your phone's battery life.

CALL BLOCKING:

You will not receive calls or messages from the blocked numbers.

CHANGING RINGTONES AND MASTER VOLUMES

1. From **Home** screen, select **Menu** ( ) **> Settings** ( ).
2. Select **Profiles** ( ) located under **Device**. The profile types are:
   - Standard
   - Outdoor
   - Silence
   - Meeting
3. Select any of the profiles. Select **Option key > Edit**.
4. Select **Option key > Save** to change the settings.

SPEED DIAL SETTINGS

1. From **Home** screen, select **Phone** ( ).
2. Select **Option key > Speed dial settings**.
3. Assign a contact for each key present in the keypad (1 to 9).
4. Press a particular keypad to initiate a call to the assigned contact.

SENDING MESSAGES

SMS and MMS are convenient and inexpensive means of communication. You can send a text message to other people via SMS service. MMS allows you to send messages by including multimedia content such as pictures, audio files, video files, and so on.

You can use the Messaging in your phone to send an SMS and MMS message to other mobile phones or any other equipment that can receive SMS and MMS.

> The MMS feature is available only if you subscribe it from your network operator.

To access the message function, from **Home** screen, select **Messaging** ( ).

SENDING SMS/MMS MESSAGE

You can send SMS and MMS messages to contacts in your phonebook and to new numbers that are not present in the phonebook.

1. To create a SMS message, from **Home** screen, select **Messaging** ( ).
2. Select **Option key > New message**.
3. Enter the contact name or the phone number in the **To** field.

   If you enter an alphabet, all the contact names starting with that alphabet and containing that alphabet are displayed as a list. Scroll down to select the contact.
4. Enter the message.

   When you add an attachment, the message is automatically converted to a multimedia message. MMS charges will apply, based on the operator.
5. You can add any multimedia attachment up to the size of <= 5 MB. To add an attachment, select **Options key > Attach photos/videos**. Select the attachment type from the options in the next step.
6. Select **Option key > Attach others**. Browse to a specific folder and select the multimedia file to be attached.
7. thread is deleted after the confirmation.
8. Tap on **Delete** to delete the thread.

To delete an individual conversation, select the converstion to be deleted and tap on Delete option and confirm the choice.

ATTACHMENT TYPE	DESCRIPTION
Capture picture	Take a new photo using the mobile camera and attach.
Capture video	Take a new video using the camcorder and attach.
Audio	Attach an audio file from the phone memory.
Record audio	Record a new audio using the sound recorder and attach.
vCard	Attach a contact available in the phone.
vCalendar	Attach a calendar event.
Slideshow	Create new slideshow or edit the existing slides and attach.

MANAGING MESSAGE SETTINGS

You can customize the way you want to view and filter the messages. You can also set the default messaging application.

To view and modify the message settings,

1. To edit message settings, from **Home** screen, select **Messaging** ( ).
2. Select **Option key > Settings**.
3. View and edit the following settings:

SETTINGS	DESCRIPTION
NOTIFICATION	
Vibrate	Enable vibrate alert for incoming messages.
DISPLAY	
Group notification message	Enable this notification message to auto combine the notification into one group.

To delete an individual conversation, select the converstion to be deleted and tap on Delete option and confirm the choice.

ATTACHMENT TYPE	DESCRIPTION
Capture picture	Take a new photo using the mobile camera and attach.
Capture video	Take a new video using the camcorder and attach.
Audio	Attach an audio file from the phone memory.
Record audio	Record a new audio using the sound recorder and attach.
vCard	Attach a contact available in the phone.
vCalendar	Attach a calendar event.
Slideshow	Create new slideshow or edit the existing slides and attach.

MANAGING MESSAGE SETTINGS

You can customize the way you want to view and filter the messages. You can also set the default messaging application.

To view and modify the message settings,

1. To edit message settings, from **Home** screen, select **Messaging** ( ).
2. Select **Option key > Settings**.
3. View and edit the following settings:

SETTINGS	DESCRIPTION
NOTIFICATION	
Vibrate	Enable vibrate alert for incoming messages.
Pop-	Enable to view received message as a pop-up.
DISPLAY	
Group notification message	Enable this notification message to auto combine the notification into one group.
STORAGE	
Delete old messages	Delete old messages automatically when the storage limit is reached.
Text message limit	Set the maximum number of SMS messages to be stored.
Multimedia message limit	Set the maximum number of MMS messages to be stored.
Memory status	Shows the memory used for SMS, MMS and the total memory used.
ADVANCED SETTINGS	
Text (SMS) messages settings	
Multimedia (MMS) messages settings	

DELETING MESSAGES

To delete all the messages,

1. From **Home** screen, select **Messaging** ( ).
2. Select the message and press **Option key > Delete selected thread** or select a message thread and press **Clear** key ( )
3. A confirmation message is displayed. Select **Delete** to delete the selected message.

EMERGENCY ALERTS

You receive active alerts and emergency alerts from the service provider.

USING THE KEYBOARD

You can view and modify the language and dictionary setting using the Phone Settings.

ENTER AND EDIT TEXT

You can use the phone keypad to enter the text quickly and easily. Type faster and more accurately on your device with Keypad's word recognition and next-word predictions.

The key features are:

- Personalized suggestions, corrections, and completions
- Emoji entry point and layouts.

PHONE DICTIONARIES

To manage phone dictionaries:

1. From **Home** screen, select **Menu** ( ) **> Settings** ( ).
2. Select **Language & input** ( ) located under **Personal** settings.

PERSONAL DICTIONARY

You can add your own words to your personal dictionary so that your device remembers them.

To add a word or phrase, including an optional shortcut,

1. Select **Language & input** ( ) located under **Personal** settings.
2. Select **FlexT9 Text Input** located under **Keyboard & input methods**.
3. Select **Personal dictionary > Options key > Add**.
4. Add a required word and respective shortcut which is optional.

PSX PTT SERVICES

Your Sonim phone comes with pre-loaded PSX PTT application.

LAUNCHING PSX PTT APPLICATION

Select the PTT button on the side of the XP5 phone or select the PTT icon on the panel of the Home screen to launch the PTT+ application.

<EXTERNAL LINK - MSI WEBSITE>

SONIM SETUP WIZARD

This is an application that can be used to provision the phone in conjunction with a web based utility at www.sonimcloud.com.

INTRODUCTION

Sonim's device provisioning solution consists of a Web based utility and SonimSetupWizard application to provision a set of devices added under a specific corporate account.

Using the web based utility, you can:

- Setup provisioning resources such as Wi-Fi, VPN, Applications, Sounds, Admin packages, Bookmarks and Contacts.
- Create a provisioning profile for a specific device group with required resources
- Generate a QR code for a specific profile and provision the devices.

USING APPLICATIONS

CAMERA

The Sonim XP5s has a rear camera with 5MP fixed focus for taking pictures. The pictures are saved in the **Gallery**.

1. From **Home** screen, select **Menu** ( ) **> Camera** ( ).
2. Select Camera mode to set the following modes:
   - **Normal** ( ): To shoot a picture in normal mode, press **center** key to capture the picture. Use Left and Right navigation keys for Zoom in and Zoom out.
   - **Video** ( ): Press **center** key to start/stop a video recording.You cannot pause the recording in the middle.
3. Select Option key to view or change camera settings such as **Flash**, **Exposure**, and **File Format** etc.

CALENDAR

The Calendar helps you to set appointments, schedule reminders and alerts and repeat them if required. You can also view your saved tasks on a daily or weekly basis.

To access calendar;

1. From **Home** screen, select **Menu** ( ) **> Calendar** ( ).
2. To change the calendar view, choose **Month** or **Agenda** from **Options** menu.
3. Select **Options** key to view the list of the following available options:
   - **Today:** Access current date events.
   - **New event:** New event can be added on selecting this option.
   - **Agenda:** Select each agenda and to view the event details.
   - **Search:** You can search for a particular event.
   - **Delete Events:** Select the **event > Option key > Done** to delete the selected event. Select **Select all** to delete all the events.

     When you have a event the **Delete event** option is enabled.
   - **Settings:** Displays the **General settings** of the calendar.

CLOCK

You can view the time of major cities in different time zones using this function. You also have the option to use **Daylight Saving Time** (DST).

1. From **Home** screen, select **Menu** ( ) > **Tools**( ).
2. Select **Clock** ( ).
3. Select **World clock icon** ( ) located on the top of the screen. To add a city , select **Option key > Add city.** Select the check box next to the city to add them to the **Clock**.
   Added cities are listed in alphabetical order.

- The local time in the home city is displayed in the upper half of the screen.
- To set the home city, select the required city from the list. It is added to the selected cities list. The selected city is set as the home city.

ALARM

You can set an alarm for a particular time.

1. From **Home** screen, select **Menu** ( ) > **Tools**( ).
2. Select **Clock** ( ).
3. Select **Alarm** activation icon ( ) on the top of the screen.
4. Select **Option key > Add** to add a new alarm.
5. To set a recurring alarm, select **Option key > Edit > Repeat**. Select the days for repeating the alarm and select **Done**.
6. Select any of the ringtones from the **Default alarm tone** sound present, and select **OK**.
7. Select **Option key > Save** to save the changes.

> The alarm will work even when the phone is set in silent mode.

STOPWATCH

1. From **Home** screen, select **Menu** ( ) > **Tools** ( ).
2. Select **Clock** ( ) > **Stop watch** ( ).
3. Select **START** and **STOP** to run the stop watch.

TIMER

1. From **Home** screen, select **Menu** ( ) > **Tools** ( ).
2. Select **Clock** ( ) > **Timer** ( ).
3. The following actions can be performed:
   - RESET
   - START
   - STOP
   - LAP

CALCULATOR

The default calculator in this phone is designed to perform simple mathematical calculations.

1. From **Home** screen, select **Menu** ( ) > **Tools**( ) > **Calculator** ( ) .
   - To enter the numbers, select the numeric keys.
   - To use mathematical operators, select the respective operation key on the keypad.
   - Select = for the final results.

SOUND RECORDER

You can record voice memos using the sound recorder.

To access the sound recorder,

1. From **Home** screen, select **Menu** ( ) > **Tools**( ) > **Sound Recorder** ( ) .
   - To record an audio file, select **Record** ( ).
   - To stop the recording, select **Stop** ( ).
   - To save the voice memo, press left arrow key and select **Save**.
   - To exit without saving, press left arrow key and select **Discard**.
   - To play the recorded file instantly, press right arrow key and select the file to be played. Press **center** key to play the voice memo.

MUSIC

You can play music files and voice memos stored in your phone using the music application.

From **Home** screen, select **Menu** ( ) > **Applications** ( ) > **Music** ( ) .

- Select **Artists** to view the music files sorted based on the artists.
- Select **Albums** to view the music files sorted based on the albums.
- Select **Songs** to view the complete list of songs stored in your phone.
- Select **Playlists** to access the default playlists in the music folder.
  - Select **Recently added** playlist to view the music files that are recently added to the music folder.
  - Select **My recordings** playlist to access all your voice memo files.

FM RADIO

You can listen to the radio through FM radio. A wired Headset should be connected to enabling FM radio.

To listen to the radio, select **Menu** ( ) **> Applications** ( ) **> FM Radio** ( ) .

Insert wired **Head Set > Options > Radio ON.**

- Select **Auto scan** to scan all the available frequency.
- Select **Add to presets** to add the selected channel to the favorite.
- Select **Settings** to change the **FM** settings.
- Select **Sleep** to automatically off the radio after the set time.
- Select **Radio off** to stop the radio playing.
- Select **Loud speaker** to enable FM play through the speaker.
- Select **Options > Presets > Option > Rename** and edit the preset channels.
- Select **Start recording** allow the user to record current playing FM and save the file.

If user removes the wired headset during FM play, FM will be stopped.

FILE EXPLORER

You can view/edit/delete/share the files stored in the phone through **File Explorer** ( ).

To view the files, select **Menu** ( ) **> Applications** ( ) **> File Explorer** ( ).

Following are the options:

- **Recent:** Displays the recent files captured or stored.
- **Downloads:** Displays the downloaded files.
- **XP5800:** Displays the different folder in the device drive.

By default, **Internal Storage** and **SD card** options are available under Storage.

Select **Internal storage** and the list of default folders are displayed:

- User can create new folder using New option.
- User can copy/move the contents of folder using Copy/ Move options.
- User can delete the existing folder using Delete option.
- User can share the folder contents via Bluetooth and message using Share option.
- User can rename the existing folder name using Rename option.
- User can view the properties of folder using Properties option.
- User can select **Exit** option for exiting from current folder.

If SD card is inserted, all the files in the SD card can be view/ edit/delete/share from file explorer.

REGULATORY INFORMATION - USA MARKET

RF EXPOSURE INFORMATION (SAR)

This device meets the government's requirements for exposure to radio waves.

This device is designed and manufactured not to exceed the emission limits for exposure to radio frequency (RF) energy set by the Federal Communications Commission of the U.S. Government.

The exposure standard for wireless device employs a unit of measurement known as the Specific Absorption Rate, or SAR. The SAR limit set by the FCC is 1.6W/kg. *Tests for SAR are conducted using standard operating positions accepted by the FCC with the device transmitting at its highest certified power level in all tested frequency bands. Although the SAR is determined at the highest certified power level, the actual SAR level of the device while operating can be well below the maximum value. This is because the device is designed to operate at multiple power levels so as to use only the poser required to reach the network. In general, the closer you are to a wireless base station antenna, the lower the power output.

The highest SAR value for the model device XP5800 (Type number PG2112) as reported to the FCC:

- when tested for use at the ear is 0.98W/kg, and
- when worn on the body, as described in this user guide, is 1.35W/kg (Body-worn measurements differ among device models, depending upon available accessories and FCC requirements.)

While there may be differences between the SAR levels of various devices and at various positions, they all meet the government requirement.

The FCC has granted an Equipment Authorization for this model device with all reported SAR levels evaluated as in compliance with the FCC RF exposure guidelines. SAR information on this model device is on file with the FCC and can be found under the Display Grant section of www.fcc.gov/oet/ea/fccid after searching on FCC ID: WYPPG2132.

For body worn operation, this device has been tested and meets the FCC RF exposure guidelines for use with an accessory that contains no metal and be positioned a minimum of 1.5cm from the body. Use of other accessories may not ensure compliance with FCC RF exposure guidelines. If you do not use a body-worn accessory and are not holding the device at the ear, position the handset a minimum of 1.5cm from your body when the device is switched on.

FEDERAL COMMUNICATION COMMISSION INTERFERENCE STATEMENT

This device complies with part 15 of the FCC Rules. Operation is subject to the following two conditions:

- This device may not cause harmful interference, and
- This device must accept any interference received, including interference that may cause undesired operation.

This device has been tested and found to comply with the limits for a Class B digital device, pursuant to Part 15 of the FCC Rules. These limits are designed to provide reasonable protection against harmful interference in a residential installation. This equipment generates, uses, and can radiate radio frequency energy, and, if not installed and used in accordance with the instructions, may cause harmful interference to radio communications. However, there is no guarantee that interference will not occur in a particular installation If this equipment does cause harmful interference to radio or television reception, which can be determined by turning the equipment off and on, the user is encouraged to try to correct the interference by one or more of the following measures:

- Reorient or relocate the receiving antenna.
- Increase the separation between the equipment and receiver.
- Connect the equipment into an outlet on a circuit different from that to which the receiver is connected.
- Consult the dealer or an experienced radio/TV technician for help.

FCC CAUTION

- Any Changes or modifications not expressly approved by the party responsible for compliance could void the user's authority to operate the equipment.
- The antenna(s) used for this transmitter must not be co-located or operating in conjunction with any

a minimum of 1.5cm from the body. Use of other accessories may not ensure compliance with FCC RF exposure guidelines. If you do not use a body-worn accessory and are not holding the device at the ear, position the handset a minimum of 1.5cm from your body when the device is switched on.

FEDERAL COMMUNICATION COMMISSION INTERFERENCE STATEMENT

This device complies with part 15 of the FCC Rules. Operation is subject to the following two conditions:

- This device may not cause harmful interference, and
- This device must accept any interference received, including interference that may cause undesired operation.

This device has been tested and found to comply with the limits for a Class B digital device, pursuant to Part 15 of the FCC Rules. These limits are designed to provide reasonable protection against harmful interference in a residential installation. This equipment generates, uses, and can radiate radio frequency energy, and, if not installed and used in accordance with the instructions, may cause harmful interference to radio communications. However, there is no guarantee that interference will not occur in a particular installation If this equipment does cause harmful interference to radio or television reception, which can be determined by turning the equipment off and on, the user is encouraged to try to correct the interference by one or more of the following measures:

- Reorient or relocate the receiving antenna.
- Increase the separation between the equipment and receiver.
- Connect the equipment into an outlet on a circuit different from that to which the receiver is connected.
- Consult the dealer or an experienced radio/TV technician for help.

FCC CAUTION

- Any Changes or modifications not expressly approved by the party responsible for compliance could void the user‘s authority to operate the equipment.
- The antenna(s) used for this transmitter must not be co-located or operating in conjunction with any other antenna or transmitter.
- The country code selection is for non-US model only and is not available to all US model. Per FCC regulation, all Wi-Fi product marketed in US must fixed to US operation channels only.
- Operations in the 5.15-5.25GHz band are restricted to indoor usage only.

ISED RF EXPOSURE STATEMENT (IC)

This EUT is compliance with SAR for general population/uncontrolled exposure limits in IC RSS-102 and had been tested in accordance with the measurement methods and procedures specified in IEEE 1528 and IEC 62209. This equipment should be installed and operated with minimum distance 1.5 cm between the radiator and your body. This device and its antenna(s) must not be co-located or operating in conjunction with any other antenna or transmitter.

Cet appareil est conforme aux limites d’exposition DAS incontrôlée pour la population générale de la norme CNR-102 d’Industrie Canada et a été testé en conformité avec les méthodes de mesure et procédures spécifiées dans IEEE 1528 et IEC 62209. Cet appareil doit être installé et utilisé avec une distance minimale de 1.5cm entre l’émetteur et votre corps. Cet appareil et sa ou ses antennes ne doivent pas être co-localisés ou fonctionner en conjonction avec tout autre antenne ou transmetteur.

HAC RATING

The FCC has created a rating system for cellular phones regarding their HAC-related performance. This rating helps consumers with hearing disabilities to find phones that work well with their hearing aid devices. The HAC rating and measurement procedure are described in the American National Standards Institute (ANSI C63.19-2011) contains two rating standards: an “M” rating from 1 to 4 for hearing aids operating in microphone mode, and a “T” rating from 1 to 4 for hearing aids operating in tele coil mode. M-Rating stands for Microphone rating and indicates the amount of reduction of RF interference between the telephone and the hearing aid in acoustic coupling mode (also called microphone mode). Phones rated M3 or M4 meet FCC requirements and generate less interference to hearing devices set in microphone mode. T-Rating stands for tele coil rating and represents inductive coupling with hearing aids that are operating in telecoil mode. A tel coil is a small piece of tightly wrapped wire, built into some hearing aids.

microphone of a hearing aid picks up all sounds, the telecoil only picks up an electromagnetic signal from the telephone. Thus, users of telecoil-equipped hearing aids are able to communicate over the telephone without the amplification of unwanted background noise. Phones rated T3 or T4 meet FCC requirements and generate less interference to hearing devices set in telecoil mode. A combination of M-rating and T-rating defines the final HAC rating and is a deciding factor in selecting cellular phones for people with hearing problems. A HAC compliant phone could be rated:

- M3/T3
- M3/T4
- M4/T3
- M4/T4
-

These ratings assist hearing device users to find phones that are compatible with their hearing devices. Ratings are shown on the phone’s box or label. The ratings are not guaranteed for suitability. The results vary depending on the individual’s hearing loss and the immunity characteristics of the used hearing device, i.e. its resistance to interference. The best way to evaluate the suitability of the phone is to try it with the intended hearing aid device.

The model XP5800 have been tested for hearing aid device compatibility and complies with the Federal Communications Commission (FCC) requirements.

These devices are rated M3/T4.

HAZARDOUS LOCATION USAGE WARNING

Determine by inspection that the following information is made available to the user by one or more of;

(a) Printed on the label for the battery

(b) Printed on the label for the host device, (c) Printed in the owner's manual, and/or (d) Posted in a help file or Internet web site.

Do not disassemble or open crush, bend or deform, puncture or shred.

Do not modify or remanufacture, attempt to insert foreign objects into the battery, immerse or expose to water or other liquids, expose to fire, explosion or other hazard.

Only use the battery for the system for which it is specified.

Only use the battery with a charging system that has been qualified with the system per CTIA Certification Requirements for Battery System Compliance to IEEE 1725. Use of an unqualified battery or charger may present a risk of fire, explosion, leakage, or other hazard.

Do not short circuit a battery or allow metallic conductive objects to contact battery terminals.

Replace the battery only with another battery that has been qualified with the system per this standard, IEEE-Std-1725. Use of an unqualified battery may present a risk of fire, explosion, leakage or other hazard. Only authorized service providers shall replace battery. (If the battery is non-user replaceable).

Do not short circuit a battery or allow metallic conductive objects to contact battery terminals.

Promptly dispose of used batteries in accordance with local regulations.

Battery usage by children should be supervised.

Avoid dropping the phone or battery. If the phone or battery is dropped, especially on a hard surface, and the user suspects damage, take it to a service center for inspection.

Improper battery use may result in a fire, explosion or other hazard.

INDEX

1.

A

Account Sync 25
Airplane Mode 16
Alarm 31
All applications icon 12
Applications 30

B

Backup 21
Battery usage
  Charging 7
  Optimize power 8
Bluetooth Devices 15

C

calculator 31
camera 30
Certificates 21

D

Data Usage 16
Display Settings 16

E

Emergency alerts 28
Encrypting phone data 20

G

Gesture Typing 29

H

HAC 34

K

Keyboard Dictionaries 29, 31

L

Location access 21

M

Messages 27
Music 31, 32

N

Notifications 12

P

Pairing a Bluetooth Device 15
Personal Dictionary 29
Phonebook 24
Phone specifications 9
Power Optimization 8

S

Security Settings 20
SIP accounts 25
SMS/MMS Message 27
Speed dial 26
System icons 12

T

Taking a Screenshot 14
Time and Date 15

W

Wi-Fi Network 15