# Variant FCC SAR Test Report

| | | |
|---|---|---|
| **Report No.** | : | **SA180412W003-1** |
| **Applicant** | : | **Sonim Technologies, Inc.** |
| **Address** | : | **1825 S. Grant St., Suite 200., San Mateo, CA, 94402** |
| **Product** | : | **Mobile Phone** |
| **FCC ID** | : | **WYPPG4032** |
| **Brand** | : | **KENWOOD** |
| **Model No.** | : | **KWSA80K** |
| **Standards** | : | **FCC 47 CFR Part 2 (2.1093) / IEEE C95.1:1992 / IEEE 1528:2013<br>KDB 865664 D01 v01r04 / KDB 865664 D02 v01r02<br>KDB 248227 D01 v02r02 / KDB 447498 D01 v06<br>/ KDB 648474 D04 v01r03 / KDB 941225 D01 v03r01<br>/ KDB 941225 D05 v02r05 / KDB 941225 D06 v02r01** |
| **Sample Received Date** | : | **Apr. 12, 2018** |
| **Date of Testing** | : | **Apr. 18, 2018 ~ May 02, 2018** |

**CERTIFICATION:** The above equipment have been tested by **BV 7LAYERS COMMUNICATIONS TECHNOLOGY (SHENZHEN) CO. LTD.**, and found compliance with the requirement of the above standards. The test record, data evaluation & Equipment Under Test (EUT) configurations represented herein are true and accurate accounts of the measurements of the sample's SAR characteristics under the conditions specified in this report. It should not be reproduced except in full, without the written approval of our laboratory. The client should not use it to claim product certification, approval, or endorsement by A2LA or any government agencies.

**Prepared By :** _____
Xianxiong Qin / Engineer

**Approved By :** _____
Luke Lu / Manager

ACCREDITED
Certificate # 3939.01

*This report is governed by, and incorporates by reference, CPS Conditions of Service as posted at the date of issuance of this report at http://www.bureauveritas.com/home/about-us/our-business/cps/about-us/terms-conditions/and is intended for your exclusive use. Any copying or replication of this report to or for any other person or entity, or use of our name or trademark, is permitted only with our prior written permission. This report sets forth our findings solely with respect to the test samples identified herein. The results set forth in this report are not indicative or representative of the quality or characteristics of the lot from which a test sample was taken or any similar or identical product unless specifically and expressly noted. Our report includes all of the tests requested by you and the results thereof based upon the information that you provided to us. Measurement uncertainty is only provided upon request for accredited tests. You have 60 days from date of issuance of this report to notify us of any material error or omission caused by our negligence or if you require measurement uncertainty; provided, however, that such notice shall be in writing and shall specifically address the issue you wish to raise. A failure to raise such issue within the prescribed time shall constitute you unqualified acceptance of the completeness of this report, the tests conducted and the correctness of the report contents.*

# Table of Contents

**Release Control Record** ..... **3**
**1. Summary of Maximum SAR Value** ..... **4**
**2. Description of Equipment Under Test** ..... **5**
**3. SAR Measurement System** ..... **7**
3.1 Definition of Specific Absorption Rate (SAR) ..... 7
3.2 SPEAG DASY System ..... 7
3.2.1 Robot ..... 8
3.2.2 Probes ..... 9
3.2.3 Data Acquisition Electronics (DAE) ..... 9
3.2.4 Phantoms ..... 10
3.2.5 Device Holder ..... 11
3.2.6 System Validation Dipoles ..... 11
3.2.7 Tissue Simulating Liquids ..... 12
3.3 SAR System Verification ..... 15
3.4 SAR Measurement Procedure ..... 16
3.4.1 Area & Zoom Scan Procedure ..... 16
3.4.2 Volume Scan Procedure ..... 16
3.4.3 Power Drift Monitoring ..... 17
3.4.4 Spatial Peak SAR Evaluation ..... 17
3.4.5 SAR Averaged Methods ..... 17
**4. SAR Measurement Evaluation** ..... **18**
4.1 EUT Configuration and Setting ..... 18
4.2 EUT Testing Position ..... 24
4.2.1 Head Exposure Conditions ..... 24
4.2.2 Body-worn Accessory Exposure Conditions ..... 26
4.2.3 Hotspot Mode Exposure Conditions ..... 27
4.2.4 Extremity Exposure Conditions ..... 28
4.2.5 Simultaneous Transmission Possibilities ..... 29
4.3 Tissue Verification ..... 30
4.4 System Validation ..... 31
4.5 System Verification ..... 32
4.6 Maximum Output Power ..... 33
4.6.1 Maximum Conducted Power ..... 33
4.6.2 Measured Conducted Power Result ..... 34
4.7 SAR Testing Results ..... 53
4.7.1 SAR Test Reduction Considerations ..... 53
4.7.2 SAR Results for Head Exposure Condition ..... 55
4.7.3 SAR Results for Body-worn Exposure Condition (Separation Distance is 1.0 cm Gap) ..... 56
4.7.4 SAR Results for Hotspot Exposure Condition (Separation Distance is 1.0 cm Gap) ..... 57
4.7.5 SAR Results for Extremity Exposure Condition (Separation Distance is 0 cm Gap) ..... 58
4.7.6 SAR Measurement Variability ..... 60
**5. Calibration of Test Equipment** ..... **92**
**6. Measurement Uncertainty** ..... **93**
**7. Information on the Testing Laboratories** ..... **95**

**Appendix A. SAR Plots of System Verification**
**Appendix B. SAR Plots of SAR Measurement**
**Appendix C. Calibration Certificate for Probe and Dipole**
**Appendix D. Photographs of EUT and Setup**

# Release Control Record

| Report No. | Reason for Change | Date Issued |
|---|---|---|
| SE171201W001 | Initial release | Dec. 13, 2017 |
| SA180412W003-1 | Based on the original report SE171201W001 change the brand & model name & shell' shape. | Jun. 07, 2018 |
| | | |
| | | |
| | | |
| | | |
| | | |
| | | |
| | | |
| | | |
| | | |
| | | |
| | | |
| | | |
| | | |
| | | |

# 1. Summary of Maximum SAR Value

| Equipment Class | Mode | Highest Reported Head $SAR_{1g}$ (W/kg) | Highest Reported Body-worn $SAR_{1g}$ (1.0 cm Gap) (W/kg) | Highest Reported Hotspot $SAR_{1g}$ (1.0 cm Gap) (W/kg) | Highest Reported Extremity $SAR_{10g}$ (0 cm Gap) (W/kg) |
|---|---|---|---|---|---|
| PCE | GSM850 | 0.31 | 0.56 | 0.56 | - |
| | GSM1900 | 0.39 | 0.69 | 0.69 | - |
| | WCDMA II | 0.81 | 1.47 | 1.47 | 3.90 |
| | WCDMA IV | 0.67 | 1.27 | 1.27 | 3.60 |
| | WCDMA V | 0.34 | 0.56 | 0.56 | - |
| | LTE 2 | 0.64 | 1.13 | 1.13 | - |
| | LTE 4 | 0.54 | 1.16 | 1.16 | 3.00 |
| | LTE 5 | 0.27 | 0.46 | 0.46 | - |
| | LTE 7 | 0.50 | 1.24 | 1.24 | 1.16 |
| | LTE 12 | 0.19 | 0.45 | 0.45 | - |
| | LTE 13 | 0.22 | 0.48 | 0.48 | - |
| | LTE 14 | 0.20 | 0.44 | 0.44 | - |
| | LTE 25 | 0.60 | 1.17 | 1.17 | 3.15 |
| | LTE 26 | 0.26 | 0.45 | 0.45 | - |
| | LTE 30 | 0.38 | 0.38 | 0.36 | - |
| | LTE 38 | 0.28 | 0.67 | 0.67 | - |
| | LTE 40 | 0.23 | 0.35 | 0.36 | |
| | LTE 41 | 0.20 | 0.52 | 0.52 | - |
| | LTE 66 | 0.60 | 1.16 | 1.16 | 3.01 |
| DTS | 2.4G WLAN | 0.49 | 0.18 | 0.18 | - |
| NII | 5.2G WLAN | N/A | N/A | 0.26 | N/A |
| | 5.3G WLAN | 1.07 | 0.36 | N/A | 0.51 |
| | 5.6G WLAN | 1.11 | 0.31 | N/A | 0.32 |
| | 5.8G WLAN | 1.09 | 0.29 | 0.29 | N/A |
| DSS | Bluetooth | 0.23 | 0.14 | 0.14 | N/A |
| DXX | NFC | N/A | N/A | N/A | N/A |
| Highest Simultaneous Transmission SAR | | Head (W/kg) | Body-worn (W/kg) | Hotspot (W/kg) | Extremity (W/kg) |
| PCE + DTS | | 1.30 | 1.45 | 1.45 | - |
| PCE + NII | | 1.50 | 1.52 | 1.56 | 1.43 |
| PCE + DSS | | 1.25 | 1.41 | 1.41 | - |

**Note:**

1. The SAR limit **(Head & Body: $SAR_{1g}$ 1.6 W/kg, Extremity: $SAR_{10g}$ 4.0 W/kg)** for general population / uncontrolled exposure is specified in FCC 47 CFR part 2 (2.1093) and ANSI/IEEE C95.1-1992.

## 2. Description of Equipment Under Test

| | |
|---|---|
| **EUT Type** | Mobile Phone |
| **FCC ID** | WYPPG4032 |
| **Brand Name** | KENWOOD |
| **Model Name** | KWSA80K |
| **IMEI Code** | 001080002463801/001080002463819 |
| **HW Version** | A |
| **SW Version** | 8A.0.0-00-7.1.1-30.00.07 |
| **Tx Frequency Bands (Unit: MHz)** | GSM850 : 824.2 ~ 848.8<br>GSM1900 : 1850.2 ~ 1909.8<br>WCDMA Band II : 1852.4 ~ 1907.6<br>WCDMA Band IV : 1712.4 ~ 1752.6<br>WCDMA Band V : 826.4 ~ 846.6<br>LTE Band 2 : 1850.7 ~ 1909.3 (1.4M), 1851.5 ~ 1908.5 (3M), 1852.5 ~ 1907.5 (5M), 1855 ~ 1905 (10M), 1857.5 ~ 1902.5 (15M), 1860 ~ 1900 (20M)<br>LTE Band 4 : 1710.7 ~ 1754.3 (1.4M), 1711.5 ~ 1753.5 (3M), 1712.5 ~ 1752.5 (5M), 1715 ~ 1750 (10M), 1717.5 ~ 1747.5 (15M), 1720 ~ 1745 (20M)<br>LTE Band 5 : 824.7 ~ 848.3 (1.4M), 825.5 ~ 847.5 (3M), 826.5 ~ 846.5 (5M), 829 ~ 844 (10M)<br>LTE Band 7 : 2502.5 ~ 2567.5 (5M), 2505 ~ 2565 (10M), 2507.5 ~ 2562.5 (15M), 2510 ~ 2560 (20M)<br>LTE Band 12 : 699.7 ~ 715.3 (1.4M), 700.5 ~ 714.5 (3M), 701.5 ~ 713.5 (5M), 704 ~ 711 (10M)<br>LTE Band 13 : 779.5 ~ 784.5 (5M), 782 (10M)<br>LTE Band 14 : 790.5 ~ 795.5 (5M), 793 (10M)<br>LTE Band 25 : 1850.7 ~ 1914.3 (1.4M), 1851.5 ~ 1913.5 (3M), 1852.5 ~ 1912.5 (5M), 1855 ~ 1910 (10M), 1857.5 ~ 1907.5 (15M), 1860 ~ 1905 (20M)<br>LTE Band 26 : 814.7 ~ 848.3 (1.4M), 815.5 ~ 847.5 (3M), 816.5 ~ 846.5 (5M), 819 ~ 844 (10M), 821.5 ~ 841.5 (15M)<br>LTE Band 30 : 2307.5 ~ 2312.5 (5M), 2310 (10M)<br>LTE Band 38 : 2572.5 ~ 2617.5 (5M), 2575 ~ 2615 (10M), 2577.5 ~ 2612.5(15M), 2580 ~ 2610 (20M)<br>LTE Band 40 : 2307.5 ~ 2312.5 (5M), 2310 (10M)<br>LTE Band 41 : 2498.5 ~ 2687.5 (5M), 2501 ~ 2685 (10M), 2503.5 ~ 2682.5 (15M), 2506 ~ 2680 (20M)<br>LTE Band 66 : 1710.7 ~ 1779.3 (1.4M), 1711.5 ~ 1778.5 (3M), 1712.5 ~ 1777.5 (5M), 1715 ~ 1775 (10M), 1717.5 ~ 1772.5 (15M), 1720 ~ 1770 (20M)<br>WLAN : 2412 ~ 2462, 5180 ~ 5240, 5260 ~ 5320, 5500 ~ 5700, 5745 ~ 5825<br>Bluetooth : 2402 ~ 2480<br>NFC : 13.56 |
| **Uplink Modulations** | GSM & GPRS : GMSK<br>EDGE : 8PSK<br>WCDMA : QPSK<br>LTE : QPSK, 16QAM, 64QAM<br>802.11b : DSSS<br>802.11a/g/n/ac : OFDM<br>Bluetooth : GFSK, π/4-DQPSK, 8-DPSK, LE<br>NFC : ASK |
| **Maximum Tune-up Conducted Power (Unit: dBm)** | GSM850 : 33.0<br>GSM1900 : 30.5<br>WCDMA Band II : 24.5<br>WCDMA Band IV : 24.5<br>WCDMA Band V : 25.0<br>LTE Band 2 : 24.0<br>LTE Band 4 : 24.0<br>LTE Band 5 : 23.5<br>LTE Band 7 : 23.0<br>LTE Band 12 : 24.0<br>LTE Band 13 : 23.5<br>LTE Band 14 : 23.5<br>LTE Band 25 : 24.0<br>LTE Band 26 : 24.5<br>LTE Band 30 : 24.0 |

| | |
|---|---|
| | LTE Band 38 : 23.5<br>LTE Band 40 : 23.5<br>LTE Band 41 : 24.5<br>LTE Band 66 : 24.2<br>WLAN 2.4G : 18.0<br>WLAN 5.2G : 17.0<br>WLAN 5.3G : 18.0<br>WLAN 5.6G : 17.0<br>WLAN 5.8G : 17.5<br>Bluetooth : 9.5 |
| **Antenna Type** | WLAN: PIFA Antenna<br>WWAN: Fixed Internal Antenna |
| **EUT Stage** | Production Unit |

**Note:**

1. The above EUT information is declared by manufacturer and for more detailed features description please refers to the manufacturer's specifications or User's Manual.
2. Base on the differences declaration, this report verify the original report(SE171201W001) worst case, and only shown the verify data on report;

**List of Accessory:**

| | | |
|---|---|---|
| **Battery** | **Brand Name** | KENWOOD |
| | **Model Name** | BAT-04900-01S |
| | **Power Rating** | 3.85Vdc, 4900mAh |
| | **Type** | Li-ion |

# 3. SAR Measurement System

## 3.1 Definition of Specific Absorption Rate (SAR)

SAR is related to the rate at which energy is absorbed per unit mass in an object exposed to a radio field. The SAR distribution in a biological body is complicated and is usually carried out by experimental techniques or numerical modeling. The standard recommends limits for two tiers of groups, occupational/controlled and general population/uncontrolled, based on a person's awareness and ability to exercise control over his or her exposure. In general, occupational/controlled exposure limits are higher than the limits for general population/uncontrolled.

The SAR definition is the time derivative (rate) of the incremental energy (dW) absorbed by (dissipated in) an incremental mass (dm) contained in a volume element (dv) of a given density (ρ). The equation description is as below:

$$\mathbf{SAR} = \frac{\mathbf{d}}{\mathbf{dt}}\left(\frac{\mathbf{dW}}{\mathbf{dm}}\right) = \frac{\mathbf{d}}{\mathbf{dt}}\left(\frac{\mathbf{dW}}{\boldsymbol{\rho}\mathbf{dv}}\right)$$

SAR is expressed in units of Watts per kilogram (W/kg)
SAR measurement can be related to the electrical field in the tissue by

$$\mathbf{SAR} = \frac{\boldsymbol{\sigma}|\mathbf{E}|^2}{\boldsymbol{\rho}}$$

Where: σ is the conductivity of the tissue, ρ is the mass density of the tissue and E is the RMS electrical field strength.

## 3.2 SPEAG DASY System

DASY system consists of high precision robot, probe alignment sensor, phantom, robot controller, controlled measurement server and near-field probe. The robot includes six axes that can move to the precision position of the DASY5 software defined. The DASY software can define the area that is detected by the probe. The robot is connected to controlled box. Controlled measurement server is connected to the controlled robot box. The DAE includes amplifier, signal multiplexing, AD converter, offset measurement and surface detection. It is connected to the Electro-optical coupler (ECO). The ECO performs the conversion form the optical into digital electric signal of the DAE and transfers data to the PC.

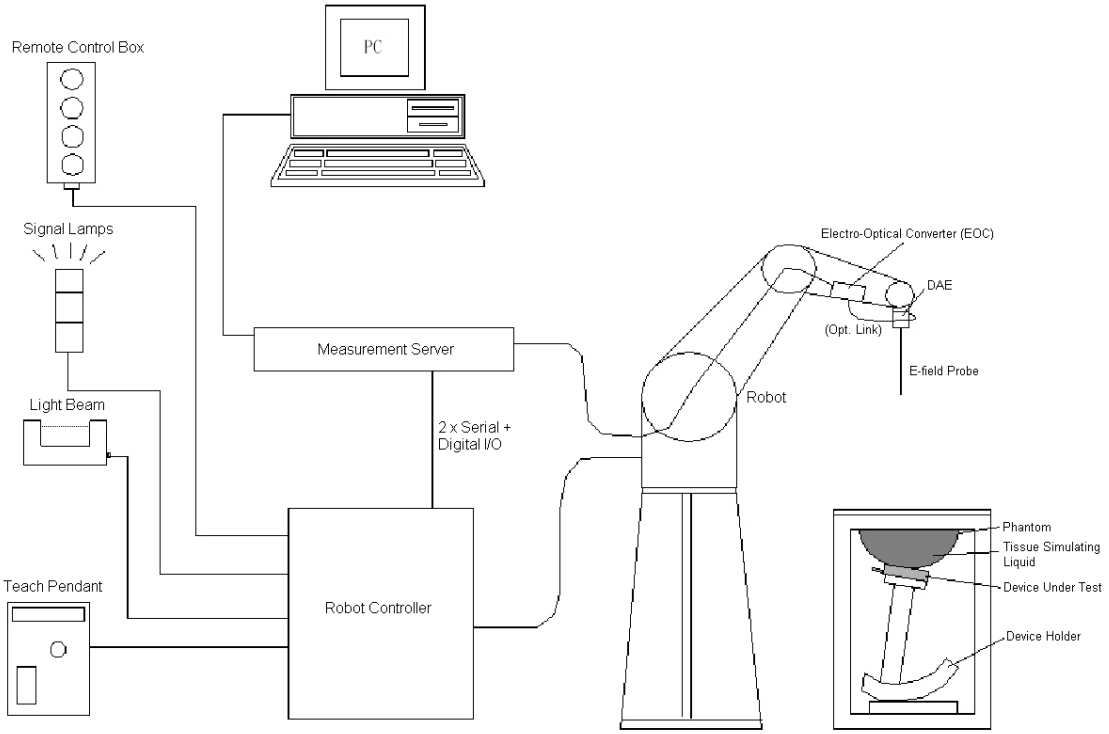


**Fig-3.1 DASY System Setup**

### 3.2.1 Robot

The DASY system uses the high precision robots from Stäubli SA (France). For the 6-axis controller system, the robot controller version (DASY5: CS8c) from Stäubli is used. The Stäubli robot series have many features that are important for our application:

- High precision (repeatability ±0.035 mm)
- High reliability (industrial design)
- Jerk-free straight movements
- Low ELF interference (the closed metallic construction shields against motor control fields)

**Fig-3.2 DASY5**

### 3.2.2 Probes

The SAR measurement is conducted with the dosimetric probe. The probe is specially designed and calibrated for use in liquid with high permittivity. The dosimetric probe has special calibration in liquid at different frequency.

| | | |
|---|---|---|
| **Model** | EX3DV4 | |
| **Construction** | Symmetrical design with triangular core. Built-in shielding against static charges. PEEK enclosure material (resistant to organic solvents, e.g., DGBE). | |
| **Frequency** | 10 MHz to 6 GHz<br>Linearity: ± 0.2 dB | |
| **Directivity** | ± 0.3 dB in HSL (rotation around probe axis)<br>± 0.5 dB in tissue material (rotation normal to probe axis) | |
| **Dynamic Range** | 10 µW/g to 100 mW/g<br>Linearity: ± 0.2 dB (noise: typically < 1 µW/g) | |
| **Dimensions** | Overall length: 337 mm (Tip: 20 mm)<br>Tip diameter: 2.5 mm (Body: 12 mm)<br>Typical distance from probe tip to dipole centers: 1 mm | |

| | | |
|---|---|---|
| **Model** | ES3DV3 | |
| **Construction** | Symmetrical design with triangular core. Interleaved sensors. Built-in shielding against static charges. PEEK enclosure material (resistant to organic solvents, e.g., DGBE). | |
| **Frequency** | 10 MHz to 4 GHz<br>Linearity: ± 0.2 dB | |
| **Directivity** | ± 0.2 dB in HSL (rotation around probe axis)<br>± 0.3 dB in tissue material (rotation normal to probe axis) | |
| **Dynamic Range** | 5 µW/g to 100 mW/g<br>Linearity: ± 0.2 dB | |
| **Dimensions** | Overall length: 337 mm (Tip: 20 mm)<br>Tip diameter: 3.9 mm (Body: 12 mm)<br>Distance from probe tip to dipole centers: 2.0 mm | |

### 3.2.3 Data Acquisition Electronics (DAE)

| | | |
|---|---|---|
| **Model** | DAE3, DAE4 | |
| **Construction** | Signal amplifier, multiplexer, A/D converter and control logic. Serial optical link for communication with DASY embedded system (fully remote controlled). Two step probe touch detector for mechanical surface detection and emergency robot stop. | |
| **Measurement Range** | -100 to +300 mV (16 bit resolution and two range settings: 4mV, 400mV) | |
| **Input Offset Voltage** | < 5µV (with auto zero) | |
| **Input Bias Current** | < 50 fA | |
| **Dimensions** | 60 x 60 x 68 mm | |

### 3.2.4 Phantoms

| | | |
|---|---|---|
| **Model** | Twin SAM | |
| **Construction** | The shell corresponds to the specifications of the Specific Anthropomorphic Mannequin (SAM) phantom defined in IEEE 1528 and IEC 62209-1. It enables the dosimetric evaluation of left and right hand phone usage as well as body mounted usage at the flat phantom region. A cover prevents evaporation of the liquid. Reference markings on the phantom allow the complete setup of all predefined phantom positions and measurement grids by teaching three points with the robot. | |
| **Material** | Vinylester, glass fiber reinforced (VE-GF) | |
| **Shell Thickness** | 2 ± 0.2 mm (6 ± 0.2 mm at ear point) | |
| **Dimensions** | Length: 1000 mm<br>Width: 500 mm<br>Height: adjustable feet | |
| **Filling Volume** | approx. 25 liters | |

| | | |
|---|---|---|
| **Model** | ELI | |
| **Construction** | Phantom for compliance testing of handheld and body-mounted wireless devices in the frequency range of 30 MHz to 6 GHz. ELI is fully compatible with the IEC 62209-2 standard and all known tissue simulating liquids. ELI has been optimized regarding its performance and can be integrated into our standard phantom tables. A cover prevents evaporation of the liquid. Reference markings on the phantom allow installation of the complete setup, including all predefined phantom positions and measurement grids, by teaching three points. The phantom is compatible with all SPEAG dosimetric probes and dipoles. | |
| **Material** | Vinylester, glass fiber reinforced (VE-GF) | |
| **Shell Thickness** | 2.0 ± 0.2 mm (bottom plate) | |
| **Dimensions** | Major axis: 600 mm<br>Minor axis: 400 mm | |
| **Filling Volume** | approx. 30 liters | |

### 3.2.5 Device Holder

| | | |
|---|---|---|
| **Model** | Mounting Device | |
| **Construction** | In combination with the Twin SAM Phantom or ELI4, the Mounting Device enables the rotation of the mounted transmitter device in spherical coordinates. Rotation point is the ear opening point. Transmitter devices can be easily and accurately positioned according to IEC, IEEE, FCC or other specifications. The device holder can be locked for positioning at different phantom sections (left head, right head, flat). | |
| **Material** | POM | |

| | | |
|---|---|---|
| **Model** | Laptop Extensions Kit | 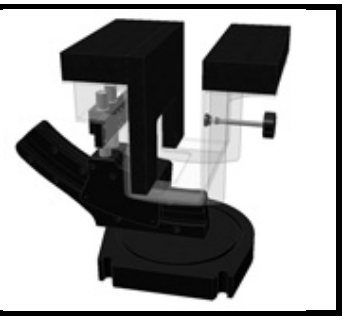 |
| **Construction** | Simple but effective and easy-to-use extension for Mounting Device that facilitates the testing of larger devices according to IEC 62209-2 (e.g., laptops, cameras, etc.). It is lightweight and fits easily on the upper part of the Mounting Device in place of the phone positioner. | |
| **Material** | POM, Acrylic glass, Foam | |

### 3.2.6 System Validation Dipoles

| | | |
|---|---|---|
| **Model** | D-Serial | |
| **Construction** | Symmetrical dipole with l/4 balun. Enables measurement of feed point impedance with NWA. Matched for use near flat phantoms filled with tissue simulating solutions. | |
| **Frequency** | 750 MHz to 5800 MHz | |
| **Return Loss** | > 20 dB | |
| **Power Capability** | > 100 W (f < 1GHz), > 40 W (f > 1GHz) | |

### 3.2.7 Tissue Simulating Liquids

For SAR measurement of the field distribution inside the phantom, the phantom must be filled with homogeneous tissue simulating liquid to a depth of at least 15 cm. For head SAR testing, the liquid height from the ear reference point (ERP) of the phantom to the liquid top surface is larger than 15 cm. For body SAR testing, the liquid height from the center of the flat phantom to the liquid top surface is larger than 15 cm. The nominal dielectric values of the tissue simulating liquids in the phantom and the tolerance of 5% are listed in Table-3.1.

| | |
|---|---|
| 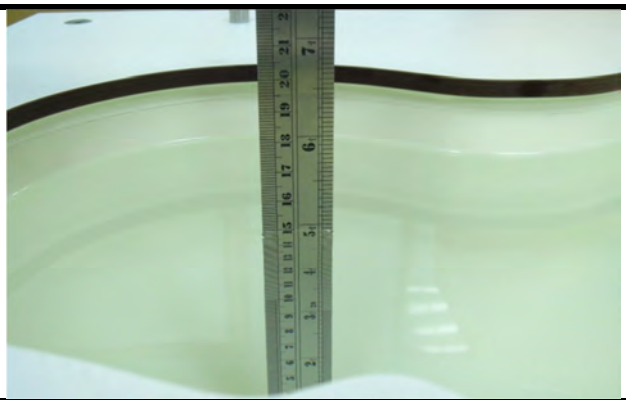 | 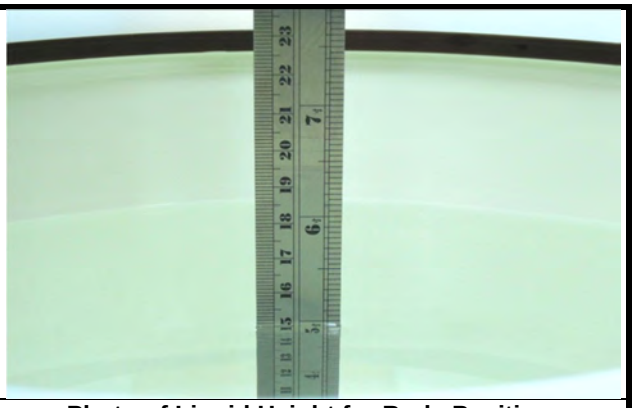 |
| **Photo of Liquid Height for Head Position** | **Photo of Liquid Height for Body Position** |

The dielectric properties of the head tissue simulating liquids are defined in IEEE 1528, and KDB 865664 D01 Appendix A. For the body tissue simulating liquids, the dielectric properties are defined in KDB 865664 D01 Appendix A. The dielectric properties of the tissue simulating liquids were verified prior to the SAR evaluation using a dielectric assessment kit and a network analyzer.

**Table-3.1 Targets of Tissue Simulating Liquid**

| Frequency (MHz) | Target Permittivity | Range of ±5% | Target Conductivity | Range of ±5% |
|---|---|---|---|---|
| **For Head** | | | | |
| 750 | 41.9 | 39.8 ~ 44.0 | 0.89 | 0.85 ~ 0.93 |
| 835 | 41.5 | 39.4 ~ 43.6 | 0.90 | 0.86 ~ 0.95 |
| 900 | 41.5 | 39.4 ~ 43.6 | 0.97 | 0.92 ~ 1.02 |
| 1450 | 40.5 | 38.5 ~ 42.5 | 1.20 | 1.14 ~ 1.26 |
| 1640 | 40.3 | 38.3 ~ 42.3 | 1.29 | 1.23 ~ 1.35 |
| 1750 | 40.1 | 38.1 ~ 42.1 | 1.37 | 1.30 ~ 1.44 |
| 1800 | 40.0 | 38.0 ~ 42.0 | 1.40 | 1.33 ~ 1.47 |
| 1900 | 40.0 | 38.0 ~ 42.0 | 1.40 | 1.33 ~ 1.47 |
| 2000 | 40.0 | 38.0 ~ 42.0 | 1.40 | 1.33 ~ 1.47 |
| 2300 | 39.5 | 37.5 ~ 41.5 | 1.67 | 1.59 ~ 1.75 |
| 2450 | 39.2 | 37.2 ~ 41.2 | 1.80 | 1.71 ~ 1.89 |
| 2600 | 39.0 | 37.1 ~ 41.0 | 1.96 | 1.86 ~ 2.06 |
| 3500 | 37.9 | 36.0 ~ 39.8 | 2.91 | 2.76 ~ 3.06 |
| 5200 | 36.0 | 34.2 ~ 37.8 | 4.66 | 4.43 ~ 4.89 |
| 5300 | 35.9 | 34.1 ~ 37.7 | 4.76 | 4.52 ~ 5.00 |
| 5500 | 35.6 | 33.8 ~ 37.4 | 4.96 | 4.71 ~ 5.21 |
| 5600 | 35.5 | 33.7 ~ 37.3 | 5.07 | 4.82 ~ 5.32 |
| 5800 | 35.3 | 33.5 ~ 37.1 | 5.27 | 5.01 ~ 5.53 |
| **For Body** | | | | |
| 750 | 55.5 | 52.7 ~ 58.3 | 0.96 | 0.91 ~ 1.01 |
| 835 | 55.2 | 52.4 ~ 58.0 | 0.97 | 0.92 ~ 1.02 |
| 900 | 55.0 | 52.3 ~ 57.8 | 1.05 | 1.00 ~ 1.10 |
| 1450 | 54.0 | 51.3 ~ 56.7 | 1.30 | 1.24 ~ 1.37 |
| 1640 | 53.8 | 51.1 ~ 56.5 | 1.40 | 1.33 ~ 1.47 |
| 1750 | 53.4 | 50.7 ~ 56.1 | 1.49 | 1.42 ~ 1.56 |
| 1800 | 53.3 | 50.6 ~ 56.0 | 1.52 | 1.44 ~ 1.60 |
| 1900 | 53.3 | 50.6 ~ 56.0 | 1.52 | 1.44 ~ 1.60 |
| 2000 | 53.3 | 50.6 ~ 56.0 | 1.52 | 1.44 ~ 1.60 |
| 2300 | 52.9 | 50.3 ~ 55.5 | 1.81 | 1.72 ~ 1.90 |
| 2450 | 52.7 | 50.1 ~ 55.3 | 1.95 | 1.85 ~ 2.05 |
| 2600 | 52.5 | 49.9 ~ 55.1 | 2.16 | 2.05 ~ 2.27 |
| 3500 | 51.3 | 48.7 ~ 53.9 | 3.31 | 3.14 ~ 3.48 |
| 5200 | 49.0 | 46.6 ~ 51.5 | 5.30 | 5.04 ~ 5.57 |
| 5300 | 48.9 | 46.5 ~ 51.3 | 5.42 | 5.15 ~ 5.69 |
| 5500 | 48.6 | 46.2 ~ 51.0 | 5.65 | 5.37 ~ 5.93 |
| 5600 | 48.5 | 46.1 ~ 50.9 | 5.77 | 5.48 ~ 6.06 |
| 5800 | 48.2 | 45.8 ~ 50.6 | 6.00 | 5.70 ~ 6.30 |

The following table gives the recipes for tissue simulating liquids.

**Table-3.2 Recipes of Tissue Simulating Liquid**

| Tissue Type | Bactericide | DGBE | HEC | NaCl | Sucrose | Triton X-100 | Water | Diethylene Glycol Mono-hexylether |
|---|---|---|---|---|---|---|---|---|
| H750 | 0.2 | - | 0.2 | 1.5 | 56.0 | - | 42.1 | - |
| H835 | 0.2 | - | 0.2 | 1.5 | 57.0 | - | 41.1 | - |
| H900 | 0.2 | - | 0.2 | 1.4 | 58.0 | - | 40.2 | - |
| H1450 | - | 43.3 | - | 0.6 | - | - | 56.1 | - |
| H1640 | - | 45.8 | - | 0.5 | - | - | 53.7 | - |
| H1750 | - | 47.0 | - | 0.4 | - | - | 52.6 | - |
| H1800 | - | 44.5 | - | 0.3 | - | - | 55.2 | - |
| H1900 | - | 44.5 | - | 0.2 | - | - | 55.3 | - |
| H2000 | - | 44.5 | - | 0.1 | - | - | 55.4 | - |
| H2300 | - | 44.9 | - | 0.1 | - | - | 55.0 | - |
| H2450 | - | 45.0 | - | 0.1 | - | - | 54.9 | - |
| H2600 | - | 45.1 | - | 0.1 | - | - | 54.8 | - |
| H3500 | - | 28.0 | - | 0.2 | - | 20.0 | 71.8 | - |
| H5G | - | - | - | - | - | 17.2 | 65.5 | 17.3 |
| B750 | 0.2 | - | 0.2 | 0.8 | 48.8 | - | 50.0 | - |
| B835 | 0.2 | - | 0.2 | 0.9 | 48.5 | - | 50.2 | - |
| B900 | 0.2 | - | 0.2 | 0.9 | 48.2 | - | 50.5 | - |
| B1450 | - | 34.0 | - | 0.3 | - | - | 65.7 | - |
| B1640 | - | 32.5 | - | 0.3 | - | - | 67.2 | - |
| B1750 | - | 31.0 | - | 0.2 | - | - | 68.8 | - |
| B1800 | - | 29.5 | - | 0.4 | - | - | 70.1 | - |
| B1900 | - | 29.5 | - | 0.3 | - | - | 70.2 | - |
| B2000 | - | 30.0 | - | 0.2 | - | - | 69.8 | - |
| B2300 | - | 31.0 | - | 0.1 | - | - | 68.9 | - |
| B2450 | - | 31.4 | - | 0.1 | - | - | 68.5 | - |
| B2600 | - | 31.8 | - | 0.1 | - | - | 68.1 | - |
| B3500 | - | 28.8 | - | 0.1 | - | - | 71.1 | - |
| B5G | - | - | - | - | - | 10.7 | 78.6 | 10.7 |

## 3.3 SAR System Verification

The system check verifies that the system operates within its specifications. It is performed daily or before every SAR measurement. The system check uses normal SAR measurements in the flat section of the phantom with a matched dipole at a specified distance. The system verification setup is shown as below.

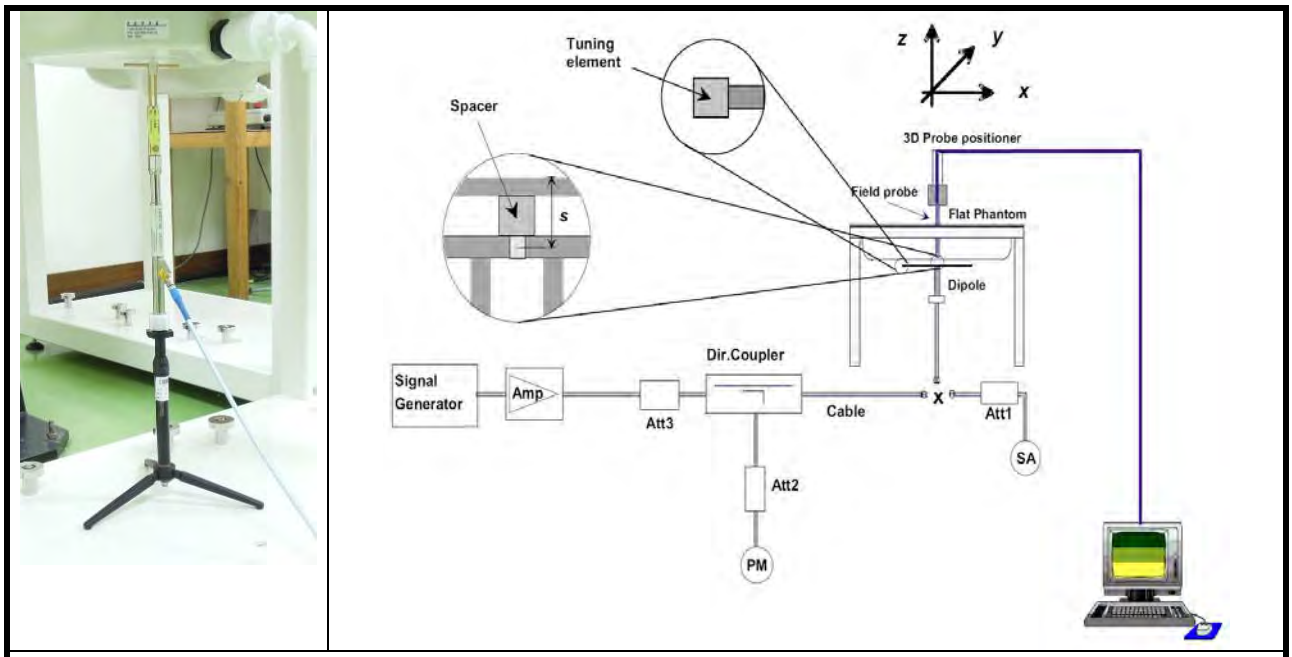


**Fig-3.4 System Verification Setup**

The validation dipole is placed beneath the flat phantom with the specific spacer in place. The distance spacer is touch the phantom surface with a light pressure at the reference marking and be oriented parallel to the long side of the phantom. The spectrum analyzer measures the forward power at the location of the system check dipole connector. The signal generator is adjusted for the desired forward power (250 mW is used for 700 MHz to 3 GHz, 100 mW is used for 3.5 GHz to 6 GHz) at the dipole connector and the power meter is read at that level. After connecting the cable to the dipole, the signal generator is readjusted for the same reading at power meter.

After system check testing, the SAR result will be normalized to 1W forward input power and compared with the reference SAR value derived from validation dipole certificate report. The deviation of system check should be within 10 %.

## 3.4 SAR Measurement Procedure

According to the SAR test standard, the recommended procedure for assessing the peak spatial-average SAR value consists of the following steps:

(a) Power reference measurement
(b) Area scan
(c) Zoom scan
(d) Power drift measurement

The SAR measurement procedures for each of test conditions are as follows:

(a) Make EUT to transmit maximum output power
(b) Measure conducted output power through RF cable
(c) Place the EUT in the specific position of phantom
(d) Perform SAR testing steps on the DASY system
(e) Record the SAR value

### 3.4.1 Area & Zoom Scan Procedure

First Area Scan is used to locate the approximate location(s) of the local peak SAR value(s). The measurement grid within an Area Scan is defined by the grid extent, grid step size and grid offset. Next, in order to determine the EM field distribution in a three-dimensional spatial extension, Zoom Scan is required. The Zoom Scan is performed around the highest E-field value to determine the averaged SAR-distribution over 10 g. According to KDB 865664 D01, the resolution for Area and Zoom scan is specified in the table below.

| Items | <= 2 GHz | 2-3 GHz | 3-4 GHz | 4-5 GHz | 5-6 GHz |
|---|---|---|---|---|---|
| Area Scan (Δx, Δy) | <= 15 mm | <= 12 mm | <= 12 mm | <= 10 mm | <= 10 mm |
| Zoom Scan (Δx, Δy) | <= 8 mm | <= 5 mm | <= 5 mm | <= 4 mm | <= 4 mm |
| Zoom Scan (Δz) | <= 5 mm | <= 5 mm | <= 4 mm | <= 3 mm | <= 2 mm |
| Zoom Scan Volume | >= 30 mm | >= 30 mm | >= 28 mm | >= 25 mm | >= 22 mm |

**Note:**

When zoom scan is required and report SAR is <= 1.4 W/kg, the zoom scan resolution of Δx / Δy (2-3GHz: <= 8 mm, 3-4GHz: <= 7 mm, 4-6GHz: <= 5 mm) may be applied.

### 3.4.2 Volume Scan Procedure

The volume scan is used for assess overlapping SAR distributions for antennas transmitting in different frequency bands. It is equivalent to an oversized zoom scan used in standalone measurements. The measurement volume will be used to enclose all the simultaneous transmitting antennas. For antennas transmitting simultaneously in different frequency bands, the volume scan is measured separately in each frequency band. In order to sum correctly to compute the 1g aggregate SAR, the EUT remain in the same test position for all measurements and all volume scan use the same spatial resolution and grid spacing. When all volume scan were completed, the software, SEMCAD postprocessor can combine and subsequently superpose these measurement data to calculating the multiband SAR.

### 3.4.3 Power Drift Monitoring

All SAR testing is under the EUT install full charged battery and transmit maximum output power. In DASY measurement software, the power reference measurement and power drift measurement procedures are used for monitoring the power drift of EUT during SAR test. Both these procedures measure the field at a specified reference position before and after the SAR testing. The software will calculate the field difference in dB. If the power drift more than 5%, the SAR will be retested.

### 3.4.4 Spatial Peak SAR Evaluation

The procedure for spatial peak SAR evaluation has been implemented according to the test standard. It can be conducted for 1g and 10g, as well as for user-specific masses. The DASY software includes all numerical procedures necessary to evaluate the spatial peak SAR value.

The base for the evaluation is a "cube" measurement. The measured volume must include the 1g and 10g cubes with the highest averaged SAR values. For that purpose, the center of the measured volume is aligned to the interpolated peak SAR value of a previously performed area scan.

The entire evaluation of the spatial peak values is performed within the post-processing engine (SEMCAD). The system always gives the maximum values for the 1g and 10g cubes. The algorithm to find the cube with highest averaged SAR is divided into the following stages:

(a) Extraction of the measured data (grid and values) from the Zoom Scan
(b) Calculation of the SAR value at every measurement point based on all stored data (A/D values and measurement parameters)
(c) Generation of a high-resolution mesh within the measured volume
(d) Interpolation of all measured values form the measurement grid to the high-resolution grid
(e) Extrapolation of the entire 3-D field distribution to the phantom surface over the distance from sensor to surface
(f) Calculation of the averaged SAR within masses of 1g and 10g

### 3.4.5 SAR Averaged Methods

In DASY, the interpolation and extrapolation are both based on the modified Quadratic Shepard's method. The interpolation scheme combines a least-square fitted function method and a weighted average method which are the two basic types of computational interpolation and approximation.

Extrapolation routines are used to obtain SAR values between the lowest measurement points and the inner phantom surface. The extrapolation distance is determined by the surface detection distance and the probe sensor offset. The uncertainty increases with the extrapolation distance. To keep the uncertainty within 1% for the 1 g and 10 g cubes, the extrapolation distance should not be larger than 5 mm.

# 4. SAR Measurement Evaluation

## 4.1 EUT Configuration and Setting

**<Connections between EUT and System Simulator>**

For WWAN SAR testing, the EUT was linked and controlled by base station emulator (Agilent E5515C is used for GSM/WCDMA, and Anritsu MT8820C is used for LTE). Communication between the EUT and the emulator was established by air link. The distance between the EUT and the communicating antenna of the emulator is larger than 50 cm and the output power radiated from the emulator antenna is at least 30 dB smaller than the output power of EUT. The EUT was set from the emulator to radiate maximum output power during SAR testing.

**<Considerations Related to GSM / GPRS / EDGE for Setup and Testing>**

The maximum multi-slot capability supported by this device is as below.

1. This EUT is class B device
2. This EUT supports GPRS multi-slot class 12 (max. uplink: 4, max. downlink: 4, total timeslots: 5)
3. This EUT supports EDGE multi-slot class 12 (max. uplink: 4, max. downlink: 4, total timeslots: 5)

For GSM850 frequency band, the power control level is set to 5 for GSM mode and GPRS (GMSK: CS1), and set to 8 for EDGE (GMSK: MCS1, 8PSK: MCS9). For GSM1900 frequency band, the power control level is set to 0 for GSM mode and GPRS (GMSK: CS1), and set to 2 for EDGE (GMSK: MCS1, 8PSK: MCS9).

SAR test reduction for GPRS and EDGE modes is determined by the source-based time-averaged output power specified for production units, including tune-up tolerance. The data mode with highest specified time-averaged output power should be tested for SAR compliance in the applicable exposure conditions. For modes with the same specified maximum output power and tolerance, the higher number time-slot configuration should be tested.

**<Considerations Related to WCDMA for Setup and Testing>**

**WCDMA Handsets Head SAR**

SAR for next to the ear head exposure is measured using a 12.2 kbps RMC with TPC bits configured to all “1’s”. The 3G SAR test reduction procedure is applied to AMR configurations with 12.2 kbps RMC as the primary mode.

**WCDMA Handsets Body-worn SAR**

SAR for body-worn configurations is measured using a 12.2 kbps RMC with TPC bits configured to all “1’s”. The 3G SAR test reduction procedure is applied to other spreading codes and multiple $DPDCH_n$ configurations supported by the handset with 12.2 kbps RMC as the primary mode.

**Handsets with Release 5 HSDPA**

The 3G SAR test reduction procedure is applied to HSDPA body-worn configurations with 12.2 kbps RMC as the primary mode. Otherwise, SAR is measured for HSDPA using the HSDPA body SAR procedures in the “Release 5 HSDPA Data Devices”, for the highest reported SAR body-worn exposure configuration in 12.2 kbps RMC. Handsets with both HSDPA and HSUPA are tested according to Release 6 HSPA test procedures.

**Handsets with Release 6 HSUPA**

The 3G SAR test reduction procedure is applied to HSPA (HSUPA/HSDPA with RMC) body-worn configurations with

12.2 kbps RMC as the primary mode. Otherwise, SAR is measured for HSPA using the HSPA body SAR procedures in the "Release 6 HSPA Data Devices", for the highest reported body-worn exposure SAR configuration in 12.2 kbps RMC. When VOIP is applicable for next to the ear head exposure in HSPA, the 3G SAR test reduction procedure is applied to HSPA with 12.2 kbps RMC as the primary mode; otherwise, the same HSPA configuration used for body-worn measurements is tested for next to the ear head exposure.

**Release 5 HSDPA Data Devices**

The 3G SAR test reduction procedure is applied to body SAR with 12.2 kbps RMC as the primary mode. Otherwise, body SAR for HSDPA is measured using an FRC with H-Set 1 in Sub-test 1 and a 12.2 kbps RMC configured in Test Loop Mode 1, for the highest reported SAR configuration in 12.2 kbps RMC without HSDPA. HSDPA is configured according to the applicable UE category of a test device. The number of HS-DSCH / HS-PDSCHs, HARQ processes, minimum inter-TTI interval, transport block sizes and RV coding sequence are defined by the H-set. To maintain a consistent test configuration and stable transmission conditions, QPSK is used in the H-set for SAR testing. HS-DPCCH should be configured with a CQI feedback cycle of 4 ms and a CQI repetition factor of 2 to maintain a constant rate of active CQI slots. DPCCH and DPDCH gain factors ($\beta_c$, $\beta_d$), and HS-DPCCH power offset parameters ($\Delta_{ACK}$, $\Delta_{NACK}$, $\Delta_{CQI}$) are set according to values indicated in below. The CQI value is determined by the UE category, transport block size, number of HS-PDSCHs and modulation used in the H-set.

| Sub-test | $\beta_c$ | $\beta_d$ | $\beta_d$ (SF) | $\beta_c$ / $\beta_d$ | $\beta_{hs}$ (1) | CM (dB)(2) | MPR |
|---|---|---|---|---|---|---|---|
| 1 | 2 / 15 | 15 / 15 | 64 | 2 / 15 | 4 / 15 | 0.0 | 0 |
| 2 | 12 / 15 (3) | 15 / 15 (3) | 64 | 12 / 15 (3) | 24 / 15 | 1.0 | 0 |
| 3 | 15 / 15 | 8 / 15 | 64 | 15 / 8 | 30 / 15 | 1.5 | 0.5 |
| 4 | 15 / 15 | 4 / 15 | 64 | 15 / 4 | 30 / 15 | 1.5 | 0.5 |

Note 1: $\Delta_{ACK}$, $\Delta_{NACK}$ and $\Delta_{CQI}$ = 8 ⇔ $A_{hs} = \beta_{hs} / \beta_c = 30 / 15 \Leftrightarrow \beta_{hs} = 30 / 15 * \beta_c$.
Note 2: CM = 1 for $\beta_c / \beta_d = 12 / 15$, $\beta_{hs} / \beta_c = 24 / 15$.
Note 3: For subtest 2 the $\beta_c / \beta_d$ ratio of 12 / 15 for the TFC during the measurement period (TF1, TF0) is achieved by setting the signaled gain factors for the reference TFC (TF1, TF1) to $\beta_c = 11 / 15$ and $\beta_d = 15 / 15$.

**Release 6 HSUPA Data Devices**

The 3G SAR test reduction procedure is applied to body SAR with 12.2 kbps RMC as the primary mode. Otherwise, body SAR for HSPA is measured with E-DCH Sub-test 5, using H-Set 1 and QPSK for FRC and a 12.2 kbps RMC configured in Test Loop Mode 1 and power control algorithm 2, according to the highest reported body SAR configuration in 12.2 kbps RMC without HSPA. When VOIP applies to head exposure, the 3G SAR test reduction procedure is applied with 12.2 kbps RMC as the primary mode. Otherwise, the same HSPA configuration used for body SAR measurements are applied to head exposure testing. Due to inner loop power control requirements in HSPA, a communication test set is required for output power and SAR tests. The 12.2 kbps RMC, FRC H-set 1 and E-DCH configurations for HSPA are configured according to the β values indicated in below.

| Sub-test | $\beta_c$ | $\beta_d$ | $\beta_d$ (SF) | $\beta_c$ / $\beta_d$ | $\beta_{hs}$ (1) | $\beta_{ec}$ | $\beta_{ed}$ | $\beta_{ed}$ (SF) | $\beta_{ed}$ (codes) | CM (2) (dB) | MPR (dB) | AG (4) Index | E-TFCI |
|---|---|---|---|---|---|---|---|---|---|---|---|---|---|
| 1 | 11 / 15 (3) | 15 / 15 (3) | 64 | 11 / 15 (3) | 22 / 15 | 209 / 225 | 1039 / 225 | 4 | 1 | 1.0 | 0.0 | 20 | 75 |
| 2 | 6 / 15 | 15 / 15 | 64 | 6 / 15 | 12 / 15 | 12 / 15 | 94 / 75 | 4 | 1 | 3.0 | 2.0 | 12 | 67 |
| 3 | 15 / 15 | 9 / 15 | 64 | 15 / 9 | 30 / 15 | 30 / 15 | $\beta_{ed1}$: 47/15<br>$\beta_{ed2}$: 47/15 | 4 | 2 | 2.0 | 1.0 | 15 | 92 |
| 4 | 2 / 15 | 15 / 15 | 64 | 2 / 15 | 4 / 15 | 2 / 15 | 56 / 75 | 4 | 1 | 3.0 | 2.0 | 17 | 71 |
| 5 | 15 / 15 (4) | 15 / 15 (4) | 64 | 15 / 15 (4) | 30 / 15 | 24 / 15 | 134 / 15 | 4 | 1 | 1.0 | 0.0 | 21 | 81 |

Note 1: $\Delta_{ACK}$, $\Delta_{NACK}$ and $\Delta_{CQI}$ = 8 ⇔ $A_{hs}$ = $\beta_{hs}$ / $\beta_c$ = 30 / 15 ⇔ $\beta_{hs}$ = 30 / 15 * $\beta_c$.
Note 2: CM = 1 for $\beta_c$ / $\beta_d$ = 12 / 15, $\beta_{hs}$ / $\beta_c$ = 24 / 15. For all other combinations of DPDCH, DPCCH, HS-DPCCH, E-DPDCH and E-DPCCH the MPR is based on the relative CM difference.
Note 3: For subtest 1 the $\beta_c$ / $\beta_d$ ratio of 11 / 15 for the TFC during the measurement period (TF1, TF0) is achieved by setting the signaled gain factors for the reference TFC (TF1, TF1) to $\beta_c$ = 10 / 15 and $\beta_d$ = 15 / 15.
Note 4: For subtest 5 the $\beta_c$ / $\beta_d$ ratio of 15 / 15 for the TFC during the measurement period (TF1, TF0) is achieved by setting the signaled gain factors for the reference TFC (TF1, TF1) to $\beta_c$ = 14 / 15 and $\beta_d$ = 15 / 15.
Note 5: Testing UE using E-DPDCH Physical Layer category 1 Sub-test 3 is not required according to TS 25.306 Table 5.1g.
Note 6: $\beta_{ed}$ cannot be set directly; it is set by Absolute Grant Value.

**<Considerations Related to LTE for Setup and Testing>**

This device contains LTE transmitter which follows 3GPP standards, is category 3, supports both QPSK and 16QAM modulations, and supported LTE band and channel bandwidth is listed in below. The output power was tested per 3GPP TS 36.521-1 maximum transmit procedures for both QPSK and 16QAM modulation. The results please refer to section 4.6 of this report.

| EUT Supported LTE Band and Channel Bandwidth | | | | | | |
|---|---|---|---|---|---|---|
| **LTE Band** | **BW 1.4 MHz** | **BW 3 MHz** | **BW 5 MHz** | **BW 10 MHz** | **BW 15 MHz** | **BW 20 MHz** |
| **2** | **V** | **V** | **V** | **V** | **V** | **V** |
| **4** | **V** | **V** | **V** | **V** | **V** | **V** |
| **5** | **V** | **V** | **V** | **V** | | |
| **7** | | | **V** | **V** | **V** | **V** |
| **12** | **V** | **V** | **V** | **V** | | |
| **13** | | | **V** | **V** | | |
| **14** | | | **V** | **V** | | |
| **25** | **V** | **V** | **V** | **V** | **V** | **V** |
| **26** | **V** | **V** | **V** | **V** | **V** | |
| **30** | | | **V** | **V** | | |
| **38** | | | **V** | **V** | **V** | **V** |
| **40** | | | **V** | **V** | | |
| **41** | | | **V** | **V** | **V** | **V** |
| **66** | **V** | **V** | **V** | **V** | **V** | **V** |

The LTE maximum power reduction (MPR) in accordance with 3GPP TS 36.101 is active all times during LTE operation. The allowed MPR for the maximum output power is specified in below.

| Modulation | Channel Bandwidth / RB Configurations | | | | | | LTE MPR Setting (dB) |
|---|---|---|---|---|---|---|---|
| | BW 1.4 MHz | BW 3 MHz | BW 5 MHz | BW 10 MHz | BW 15 MHz | BW 20 MHz | |
| **QPSK** | **> 5** | **> 4** | **> 8** | **> 12** | **> 16** | **> 18** | **1** |
| **16QAM** | **<= 5** | **<= 4** | **<= 8** | **<= 12** | **<= 16** | **<= 18** | **1** |
| **16QAM** | **> 5** | **> 4** | **> 8** | **> 12** | **> 16** | **> 18** | **2** |

**Note:** MPR is according to the standard and implemented in the circuit (mandatory).

In addition, the device is compliant with additional maximum power reduction (A-MPR) requirements defined in 3GPP TS 36.101 section 6.2.4 that was disabled for all FCC compliance testing.

During LTE SAR testing, the related parameters of operating band, channel bandwidth, uplink channel number, modulation type, and RB was set in base station simulator. When the EUT has registered and communicated to base station simulator, the simulator set to make EUT transmitting the maximum radiated power.

**TDD-LTE Setup Configurations**

According to KDB 941225 D05, SAR testing for TDD-LTE device must be tested using a fixed periodic duty factor according to the highest transmission duty factor implemented for the device and supported by the defined 3GPP TDD-LTE configurations. The TDD-LTE of this device supports frame structure type 2 defined in 3GPP TS 36.211 section 4.2, and the frame structure configuration can be referred to below.

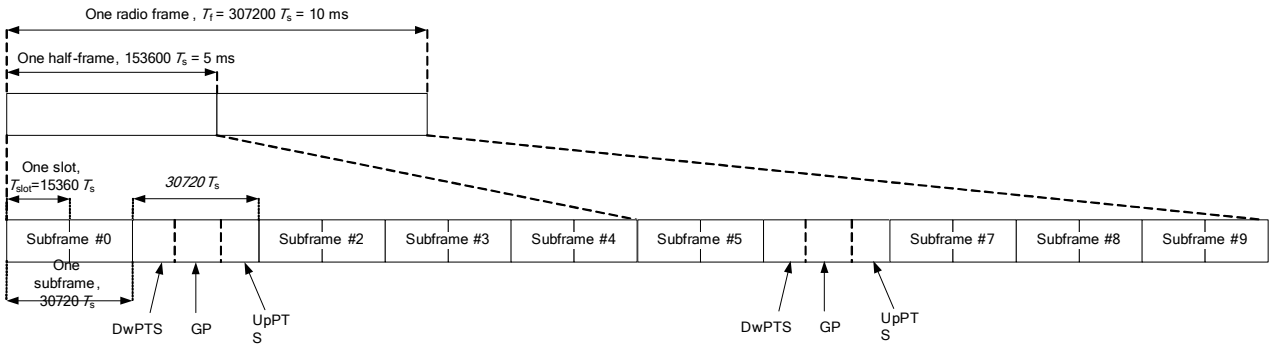


**3GPP TS 36.211 Figure 4.2-1: Frame Structure Type 2**

| Special Subframe Configuration | Normal Cyclic Prefix in Downlink | | | Extended Cyclic Prefix in Downlink | | |
|---|---|---|---|---|---|---|
| | DwPTS | UpPTS | | DwPTS | UpPTS | |
| | | Normal Cyclic Prefix in Uplink | Extended Cyclic Prefix in Uplink | | Normal Cyclic Prefix in Uplink | Extended Cyclic Prefix in Uplink |
| 0 | 6592 • Ts | 2192 • Ts | 2560 • Ts | 7680 • Ts | 2192 • Ts | 2560 • Ts |
| 1 | 19760 • Ts | | | 20480 • Ts | | |
| 2 | 21952 • Ts | | | 23040 • Ts | | |
| 3 | 24144 • Ts | | | 25600 • Ts | | |
| 4 | 26336 • Ts | | | 7680 • Ts | 4384 • Ts | 5120 • Ts |
| 5 | 6592 • Ts | 4384 • Ts | 5120 • Ts | 20480 • Ts | | |
| 6 | 19760 • Ts | | | 23040 • Ts | | |
| 7 | 21952 • Ts | | | 12800 • Ts | | |
| 8 | 24144 • Ts | | | - | - | - |
| 9 | 13168 • Ts | | | - | - | - |

**3GPP TS 36.211 Table 4.2-1: Configuration of Special Subframe**

| Uplink-Downlink Configuration | Downlink-to-Uplink Switch-Point Periodicity | Subframe Number | | | | | | | | | |
|---|---|---|---|---|---|---|---|---|---|---|---|
| | | 0 | 1 | 2 | 3 | 4 | 5 | 6 | 7 | 8 | 9 |
| 0 | 5 ms | D | S | U | U | U | D | S | U | U | U |
| 1 | 5 ms | D | S | U | U | D | D | S | U | U | D |
| 2 | 5 ms | D | S | U | D | D | D | S | U | D | D |
| 3 | 10 ms | D | S | U | U | U | D | D | D | D | D |
| 4 | 10 ms | D | S | U | U | D | D | D | D | D | D |
| 5 | 10 ms | D | S | U | D | D | D | D | D | D | D |
| 6 | 5 ms | D | S | U | U | U | D | S | U | U | D |

**3GPP TS 36.211 Table 4.2-2: Uplink-Downlink Configurations**

The variety of different TD-LTE uplink-downlink configurations allows a network operator to allocate the network's capacity between uplink and downlink traffic to meet the needs of the network. The uplink duty cycle of these seven configurations can readily be computed and shown in below.

| UL-DL Configuration | 0 | 1 | 2 | 3 | 4 | 5 | 6 |
|---|---|---|---|---|---|---|---|
| Highest Duty-Cycle | 63.33% | 43.33% | 23.33% | 31.67% | 21.67% | 11.67% | 53.33% |

**<Considerations Related to WLAN for Setup and Testing>**

In general, various vendor specific external test software and chipset based internal test modes are typically used for SAR measurement. These chipset based test mode utilities are generally hardware and manufacturer dependent, and often include substantial flexibility to reconfigure or reprogram a device. A Wi-Fi device must be configured to transmit continuously at the required data rate, channel bandwidth and signal modulation, using the highest transmission duty factor supported by the test mode tools for SAR measurement. The test frequencies established using test mode must correspond to the actual channel frequencies. When 802.11 frame gaps are accounted for in the transmission, a maximum transmission duty factor of 92 - 96% is typically achievable in most test mode configurations. A minimum transmission duty factor of 85% is required to avoid certain hardware and device implementation issues related to wide range SAR scaling. In addition, a periodic transmission duty factor is required for current generation SAR systems to measure SAR correctly. The reported SAR must be scaled to 100% transmission duty factor to determine compliance at the maximum tune-up tolerance limit.

According to KDB 248227 D01, this device has installed WLAN engineering testing software which can provide continuous transmitting RF signal. During WLAN SAR testing, this device was operated to transmit continuously at the maximum transmission duty with specified transmission mode, operating frequency, lowest data rate, and maximum output power.

**Initial Test Configuration**

An initial test configuration is determined for OFDM transmission modes in 2.4 GHz and 5 GHz bands according to the channel bandwidth, modulation and data rate combination(s) with the highest maximum output power specified for production units in each standalone and aggregated frequency band. When the same maximum power is specified for multiple transmission modes in a frequency band, the largest channel bandwidth, lowest order modulation, lowest data rate and lowest order 802.11a/g/n/ac mode is used for SAR measurement, on the highest measured output power channel in the initial test configuration, for each frequency band.

**Subsequent Test Configuration**

SAR measurement requirements for the remaining 802.11 transmission mode configurations that have not been tested in the initial test configuration are determined separately for each standalone and aggregated frequency band, in each exposure condition, according to the maximum output power specified for production units. Additional power measurements may be required to determine if SAR measurements are required for subsequent highest output power channels in a subsequent test configuration. When the highest reported SAR for the initial test configuration according to the initial test position or fixed exposure position requirements, is adjusted by the ratio of the subsequent test configuration to initial test configuration specified maximum output power and the adjusted SAR is ≤ 1.2 W/kg, SAR is not required for that subsequent test configuration.

**SAR Test Configuration and Channel Selection**

When multiple channel bandwidth configurations in a frequency band have the same specified maximum output power, the initial test configuration is using largest channel bandwidth, lowest order modulation, lowest data rate, and lowest order 802.11 mode (i.e., 802.11a is chosen over 802.11n then 802.11ac or 802.11g is chosen over 802.11n). After an initial test configuration is determined, if multiple test channels have the same measured maximum output power, the channel chosen for SAR measurement is determined according to the following.

1) The channel closest to mid-band frequency is selected for SAR measurement.

2) For channels with equal separation from mid-band frequency; for example, high and low channels or two mid-band channels, the higher frequency (number) channel is selected for SAR measurement.

**Test Reduction for U-NII-1 (5.2 GHz) and U-NII-2A (5.3 GHz) Bands**

For devices that operate in both U-NII bands using the same transmitter and antenna(s), SAR test reduction is determined according to the following.

1) When the same maximum output power is specified for both bands, begin SAR measurement in U-NII-2A band by applying the OFDM SAR requirements. If the highest reported SAR for a test configuration is ≤ 1.2 W/kg, SAR is not required for U-NII-1 band for that configuration (802.11 mode and exposure condition).

2) When different maximum output power is specified for the bands, begin SAR measurement in the band with higher specified maximum output power. The highest reported SAR for the tested configuration is adjusted by the ratio of lower to higher specified maximum output power for the two bands. When the adjusted SAR is ≤ 1.2 W/kg, SAR is not required for the band with lower maximum output power in that test configuration.

**<Considerations Related to Bluetooth for Setup and Testing>**

This device has installed Bluetooth engineering testing software which can provide continuous transmitting RF signal. During Bluetooth SAR testing, this device was operated to transmit continuously at the maximum transmission duty with specified transmission mode, operating frequency, lowest data rate, and maximum output power.

## 4.2 EUT Testing Position

This variant report is made for verification. All the worst SAR configurations specified in the original SAR report was repeated and verified to ensure the device remains compliant.

According to KDB 648474 D04, handsets are tested for SAR compliance in head, body-worn accessory and other use configurations described in the following subsections.

### 4.2.1 Head Exposure Conditions

Head exposure is limited to next to the ear voice mode operations. Head SAR compliance is tested according to the test positions defined in IEEE Std 1528-2013 using the SAM phantom illustrated as below.

1. Define two imaginary lines on the handset

(a) The vertical centerline passes through two points on the front side of the handset - the midpoint of the width $w_t$ of the handset at the level of the acoustic output, and the midpoint of the width $w_b$ of the bottom of the handset.

(b) The horizontal line is perpendicular to the vertical centerline and passes through the center of the acoustic output. The horizontal line is also tangential to the face of the handset at point A.

(c) The two lines intersect at point A. Note that for many handsets, point A coincides with the center of the acoustic output; however, the acoustic output may be located elsewhere on the horizontal line. Also note that the vertical centerline is not necessarily parallel to the front face of the handset, especially for clamshell handsets, handsets with flip covers, and other irregularly shaped handsets.

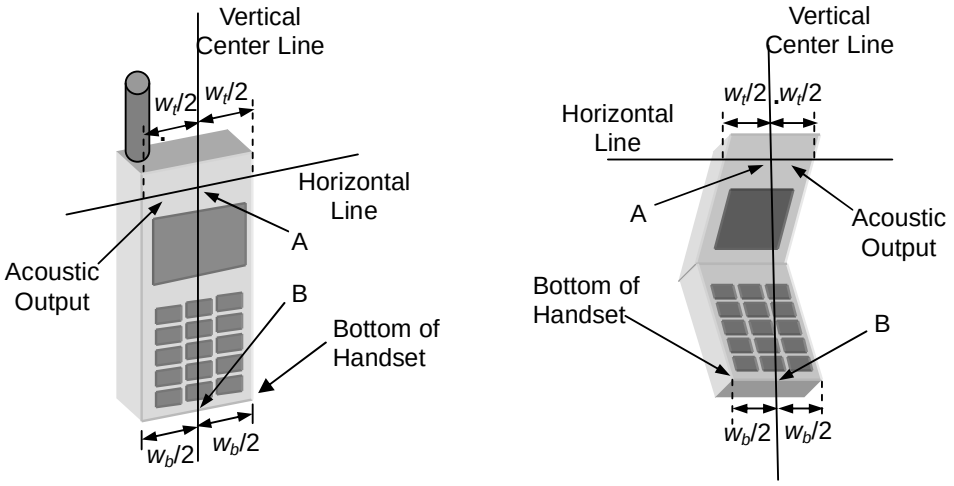


**Fig-4.1 Illustration for Handset Vertical and Horizontal Reference Lines**

2. Cheek Position

(a) To position the device with the vertical center line of the body of the device and the horizontal line crossing the center piece in a plane parallel to the sagittal plane of the phantom. While maintaining the device in this plane, align the vertical center line with the reference plane containing the three ear and mouth reference point (M: Mouth, RE: Right Ear, and LE: Left Ear) and align the center of the ear piece with the line RE-LE.

(b) To move the device towards the phantom with the ear piece aligned with the line LE-RE until the phone touched the ear. While maintaining the device in the reference plane and maintaining the phone contact with the ear, move the bottom of the phone until any point on the front side is in contact with the cheek of the phantom or until contact with the ear is lost (see Fig-4.2).

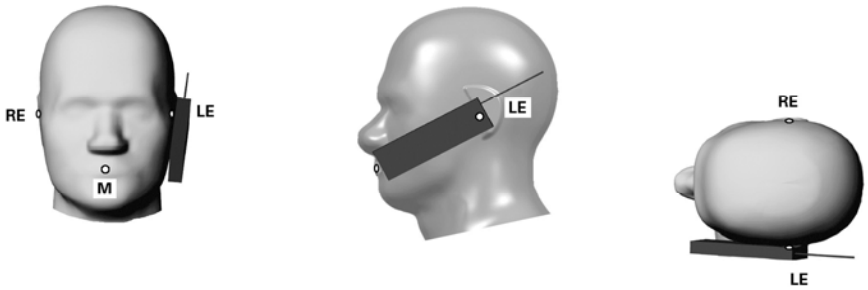


**Fig-4.2 Illustration for Cheek Position**

3. Tilted Position

(a) To position the device in the “cheek” position described above.

(b) While maintaining the device the reference plane described above and pivoting against the ear, moves it outward away from the mouth by an angle of 15 degrees or until contact with the ear is lost (see Fig-4.3).

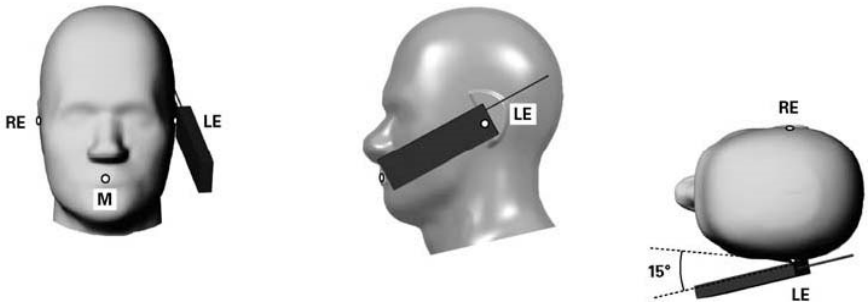


**Fig-4.3 Illustration for Tilted Position**

### 4.2.2 Body-worn Accessory Exposure Conditions

Body-worn accessory exposure is typically related to voice mode operations when handsets are carried in body-worn accessories. The body-worn accessory procedures in KDB 447498 D01 are used to test for body-worn accessory SAR compliance, without a headset connected to it. This enables the test results for such configuration to be compatible with that required for hotspot mode when the body-worn accessory test separation distance is greater than or equal to that required for hotspot mode. When the reported SAR for a body-worn accessory, measured without a headset connected to the handset, is > 1.2 W/kg, the highest reported SAR configuration for that wireless mode and frequency band should be repeated for that body-worn accessory with a headset attached to the handset.

Body-worn accessories that do not contain metallic or conductive components may be tested according to worst-case exposure configurations, typically according to the smallest test separation distance required for the group of body-worn accessories with similar operating and exposure characteristics. All body-worn accessories containing metallic components are tested in conjunction with the host device.

Body-worn accessory SAR compliance is based on a single minimum test separation distance for all wireless and operating modes applicable to each body-worn accessory used by the host, and according to the relevant voice and/or data mode transmissions and operations. If a body-worn accessory supports voice only operations in its normal and expected use conditions, testing of data mode for body-worn compliance is not required.

A conservative minimum test separation distance for supporting off-the-shelf body-worn accessories that may be acquired by users of consumer handsets is used to test for body-worn accessory SAR compliance. This distance is determined by the handset manufacturer, according to the requirements of Supplement C 01-01. Devices that are designed to operate on the body of users using lanyards and straps, or without requiring additional body-worn accessories, will be tested using a conservative minimum test separation distance <= 5 mm to support compliance.

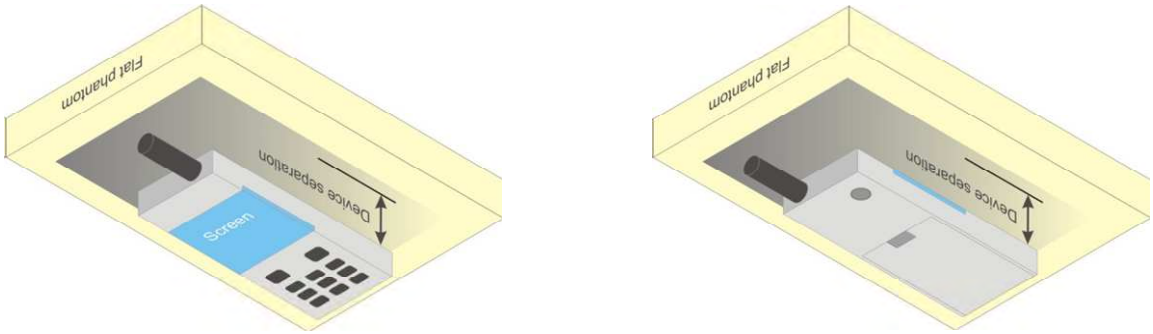


**Fig-4.4 Illustration for Body Worn Position**

### 4.2.3 Hotspot Mode Exposure Conditions

For handsets that support hotspot mode operations, with wireless router capabilities and various web browsing functions, the relevant hand and body exposure conditions are tested according to the hotspot SAR procedures in KDB 941225 D06. A test separation distance of 10 mm is required between the phantom and all surfaces and edges with a transmitting antenna located within 25 mm from that surface or edge. When the form factor of a handset is smaller than 9 cm x 5 cm, a test separation distance of 5 mm (instead of 10 mm) is required for testing hotspot mode. When the separation distance required for body-worn accessory testing is larger than or equal to that tested for hotspot mode, in the same wireless mode and for the same surface of the phone, the hotspot mode SAR data may be used to support body-worn accessory SAR compliance for that particular configuration (surface).

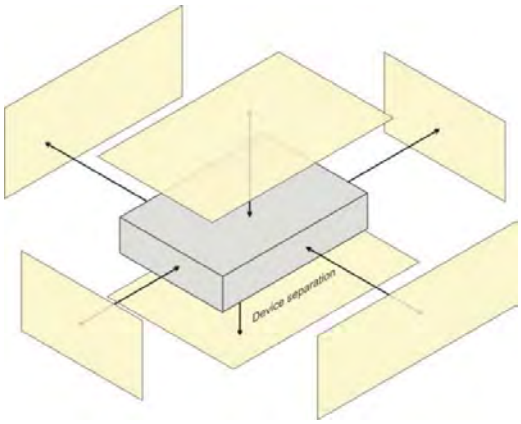


Based on the antenna location shown on appendix D of this report, the SAR testing required for hotspot mode is listed as below.

| Antenna | Front Face | Rear Face | Left Side | Right Side | Top Side | Bottom Side |
|---|---|---|---|---|---|---|
| WWAN Ant-0 | V | V | V | V | | V |
| WLAN / BT | V | V | V | V | V | |

#### 4.2.4 Extremity Exposure Conditions

For smart phones with a display diagonal dimension > 15 cm or an overall diagonal dimension > 16 cm that provide similar mobile web access and multimedia support found in mini-tablets or UMPC mini-tablets that support voice calls next to the ear, the following phablet procedures should be applied to evaluate SAR compliance for each applicable wireless modes and frequency band. Devices marketed as phablets, regardless of form factors and operating characteristics must be tested as a phablet to determine SAR compliance.

1. The normally required head and body-worn accessory SAR test procedures for handsets, including hotspot mode, must be applied.
2. The UMPC mini-tablet procedures must also be applied to test the SAR of all surfaces and edges with an antenna located at <= 25 mm from that surface or edge, in direct contact with a flat phantom, for 10-g extremity SAR according to the body-equivalent tissue dielectric parameters in KDB 865664 to address interactive hand use exposure conditions. The UMPC mini-tablet 1-g SAR at 5 mm is not required. When hotspot mode applies, 10-g extremity SAR is required only for the surfaces and edges with hotspot mode 1-g SAR > 1.2 W/kg. The normal tablet procedures in KDB 616217 are required when the over diagonal dimension of the device is > 20 cm. Hotspot mode SAR is not required when normal tablet procedures are applied. Extremity 10-g SAR is also not required for the front (top) surface of large form factor full size tablets. The more conservative tablet SAR results can be used to support the 10-g extremity SAR for phablet mode.
3. The simultaneous transmission operating configurations applicable to voice and data transmissions for both phone and mini-tablet modes must be taken into consideration separately for 1-g and 10-g SAR to determine the simultaneous transmission SAR test exclusion and measurement requirements for the relevant wireless modes and exposure conditions.

### 4.2.5 Simultaneous Transmission Possibilities

The simultaneous transmission possibilities for this device are listed as below.

| Simultaneous TX Combination | Capable Transmit Configurations | Head (Voice / VoIP) | Body-worn (Voice / VoIP) | Hotspot (Data) | Extremity (Data) |
|---|---|---|---|---|---|
| 1 | GSM850 (Voice / Data) + WLAN (Data) | Yes | Yes | Yes | No |
| 2 | GSM1900 (Voice / Data) + WLAN (Data) | Yes | Yes | Yes | No |
| 3 | WCDMA II (Voice / Data) + WLAN (Data) | Yes | Yes | Yes | Yes |
| 4 | WCDMA IV (Voice / Data) + WLAN (Data) | Yes | Yes | Yes | Yes |
| 5 | WCDMA V (Voice / Data) + WLAN (Data) | Yes | Yes | Yes | No |
| 6 | LTE 2 (Data) + WLAN (Data) | Yes | Yes | Yes | No |
| 7 | LTE 4 (Data) + WLAN (Data) | Yes | Yes | Yes | Yes |
| 8 | LTE 5 (Data) + WLAN (Data) | Yes | Yes | Yes | No |
| 9 | LTE 7 (Data) + WLAN (Data) | Yes | Yes | Yes | Yes |
| 10 | LTE 12 (Data) + WLAN (Data) | Yes | Yes | Yes | No |
| 11 | LTE 13 (Data) + WLAN (Data) | Yes | Yes | Yes | No |
| 12 | LTE 14 (Data) + WLAN (Data) | Yes | Yes | Yes | No |
| 13 | LTE 25 (Data) + WLAN (Data) | Yes | Yes | Yes | Yes |
| 14 | LTE 26 (Data) + WLAN (Data) | Yes | Yes | Yes | No |
| 15 | LTE 30 (Data) + WLAN (Data) | Yes | Yes | Yes | No |
| 16 | LTE 38 (Data) + WLAN (Data) | Yes | Yes | Yes | No |
| 17 | LTE 40 (Data) + WLAN (Data) | Yes | Yes | Yes | No |
| 18 | LTE 41 (Data) + WLAN (Data) | Yes | Yes | Yes | No |
| 19 | LTE 66 (Data) + WLAN (Data) | Yes | Yes | Yes | Yes |
| 20 | GSM850 (Voice / Data) + BT (Data) | Yes | Yes | Yes | No |
| 21 | GSM1900 (Voice / Data) + BT (Data) | Yes | Yes | Yes | No |
| 22 | WCDMA II (Voice / Data) + BT (Data) | Yes | Yes | Yes | No |
| 23 | WCDMA IV (Voice / Data) + BT (Data) | Yes | Yes | Yes | No |
| 24 | WCDMA V (Voice / Data) + BT (Data) | Yes | Yes | Yes | No |
| 25 | LTE 2 (Data) + BT (Data) | Yes | Yes | Yes | No |
| 26 | LTE 4 (Data) + BT (Data) | Yes | Yes | Yes | No |
| 27 | LTE 5 (Data) + BT (Data) | Yes | Yes | Yes | No |
| 28 | LTE 7 (Data) + BT (Data) | Yes | Yes | Yes | No |
| 29 | LTE 12 (Data) + BT (Data) | Yes | Yes | Yes | No |
| 30 | LTE 13 (Data) + BT (Data) | Yes | Yes | Yes | No |
| 31 | LTE 14 (Data) + BT (Data) | Yes | Yes | Yes | No |
| 32 | LTE 25 (Data) + BT (Data) | Yes | Yes | Yes | No |
| 33 | LTE 26 (Data) + BT (Data) | Yes | Yes | Yes | No |
| 34 | LTE 30 (Data) + BT (Data) | Yes | Yes | Yes | No |
| 35 | LTE 38 (Data) + BT (Data) | Yes | Yes | Yes | No |
| 36 | LTE 40 (Data) + BT (Data) | Yes | Yes | Yes | No |
| 37 | LTE 41 (Data) + BT (Data) | Yes | Yes | Yes | No |
| 38 | LTE 66 (Data) + BT (Data) | Yes | Yes | Yes | No |

**Note :**

1. The 2.4G WLAN and 5G WLAN cannot transmit simultaneously.
2. The WLAN and Bluetooth cannot transmit simultaneously, so there is no co-location test requirement for WLAN and Bluetooth.

## 4.3 Tissue Verification

The measuring results for tissue simulating liquid are shown as below.

| Test Date | Tissue Type | Frequency (MHz) | Liquid Temp. (℃) | Measured Conductivity (σ) | Measured Permittivity ($\varepsilon_r$) | Target Conductivity (σ) | Target Permittivity ($\varepsilon_r$) | Conductivity Deviation (%) | Permittivity Deviation (%) |
|---|---|---|---|---|---|---|---|---|---|
| Apr. 20, 2018 | H750 | 750 | 22.2 | 0.890 | 40.774 | 0.89 | 41.90 | 0.00 | -2.69 |
| Apr. 21, 2018 | H835 | 835 | 22.4 | 0.890 | 41.410 | 0.90 | 41.50 | -1.11 | -0.22 |
| Apr. 19, 2018 | H1750 | 1750 | 22.3 | 1.354 | 39.394 | 1.37 | 40.10 | -1.17 | -1.76 |
| Apr. 18, 2018 | H1900 | 1900 | 22.0 | 1.413 | 41.330 | 1.40 | 40.00 | 0.93 | 3.33 |
| Apr. 25, 2018 | H2300 | 2300 | 22.0 | 1.669 | 38.532 | 1.67 | 39.50 | -0.06 | -2.45 |
| Apr. 24, 2018 | H2450 | 2450 | 22.3 | 1.795 | 38.822 | 1.80 | 39.20 | -0.28 | -0.96 |
| Apr. 23, 2018 | H2600 | 2600 | 22.1 | 2.039 | 38.932 | 1.96 | 39.00 | 4.03 | -0.17 |
| Apr. 26, 2018 | H5G | 5250 | 21.9 | 4.691 | 35.329 | 4.71 | 35.90 | -0.40 | -1.59 |
| Apr. 26, 2018 | H5G | 5600 | 21.9 | 5.040 | 34.826 | 5.07 | 35.50 | -0.59 | -1.90 |
| Apr. 26, 2018 | H5G | 5800 | 21.9 | 5.249 | 34.538 | 5.27 | 35.30 | -0.40 | -2.16 |
| Apr. 20, 2018 | B750 | 750 | 22.2 | 0.965 | 55.172 | 0.96 | 55.50 | 0.52 | -0.59 |
| Apr. 21, 2018 | B835 | 835 | 22.4 | 0.992 | 56.824 | 0.97 | 55.20 | 2.27 | 2.94 |
| Apr. 19, 2018 | B1750 | 1750 | 22.3 | 1.492 | 51.975 | 1.49 | 53.40 | 0.13 | -2.67 |
| Apr. 18, 2018 | B1900 | 1900 | 22.0 | 1.550 | 52.906 | 1.52 | 53.30 | 1.97 | -0.74 |
| Apr. 25, 2018 | B2300 | 2300 | 22.0 | 1.801 | 52.651 | 1.81 | 52.90 | -0.50 | -0.47 |
| Apr. 24, 2018 | B2450 | 2450 | 22.3 | 1.929 | 51.582 | 1.95 | 52.70 | -1.08 | -2.12 |
| Apr. 23, 2018 | B2600 | 2600 | 22.1 | 2.199 | 52.350 | 2.16 | 52.50 | 1.81 | -0.29 |
| May 02, 2018 | B5G | 5250 | 22.1 | 5.233 | 50.915 | 5.36 | 48.90 | -2.37 | 4.12 |
| May 02, 2018 | B5G | 5600 | 22.1 | 5.817 | 50.304 | 5.77 | 48.50 | 0.81 | 3.72 |
| May 02, 2018 | B5G | 5800 | 22.1 | 6.115 | 49.816 | 6.00 | 48.20 | 1.92 | 3.35 |

**Note:**

The dielectric properties of the tissue simulating liquid must be measured within 24 hours before the SAR testing and within ±5% of the target values. Liquid temperature during the SAR testing must be within ±2 ℃.

## 4.4 System Validation

The SAR measurement system was validated according to procedures in KDB 865664 D01. The validation status in tabulated summary is as below.

| Test Date | Probe S/N | Calibration Point | | Measured Conductivity (σ) | Measured Permittivity ($\varepsilon_r$) | Validation for CW | | | Validation for Modulation | | |
|---|---|---|---|---|---|---|---|---|---|---|---|
| | | | | | | Sensitivity Range | Probe Linearity | Probe Isotropy | Modulation Type | Duty Factor | PAR |
| Apr. 20, 2018 | 3873 | Head | 750 | 0.890 | 40.774 | Pass | Pass | Pass | N/A | N/A | N/A |
| Apr. 21, 2018 | 3873 | Head | 835 | 0.890 | 41.410 | Pass | Pass | Pass | GMSK | Pass | N/A |
| Apr. 19, 2018 | 3873 | Head | 1750 | 1.354 | 39.394 | Pass | Pass | Pass | GMSK | Pass | N/A |
| Apr. 18, 2018 | 3873 | Head | 1900 | 1.413 | 41.330 | Pass | Pass | Pass | GMSK | Pass | N/A |
| Apr. 25, 2018 | 3873 | Head | 2300 | 1.669 | 38.532 | Pass | Pass | Pass | N/A | N/A | N/A |
| Apr. 24, 2018 | 3873 | Head | 2450 | 1.795 | 38.822 | Pass | Pass | Pass | OFDM | N/A | Pass |
| Apr. 23, 2018 | 3873 | Head | 2600 | 2.039 | 38.932 | Pass | Pass | Pass | N/A | N/A | N/A |
| Apr. 26, 2018 | 3873 | Head | 5250 | 4.691 | 35.329 | Pass | Pass | Pass | OFDM | N/A | Pass |
| Apr. 26, 2018 | 3873 | Head | 5600 | 5.040 | 34.826 | Pass | Pass | Pass | OFDM | N/A | Pass |
| Apr. 26, 2018 | 3873 | Head | 5800 | 5.249 | 34.538 | Pass | Pass | Pass | OFDM | N/A | Pass |
| Apr. 20, 2018 | 3873 | Body | 750 | 0.965 | 55.172 | Pass | Pass | Pass | N/A | N/A | N/A |
| Apr. 21, 2018 | 3873 | Body | 835 | 0.992 | 56.824 | Pass | Pass | Pass | GMSK | Pass | N/A |
| Apr. 19, 2018 | 3873 | Body | 1750 | 1.492 | 51.975 | Pass | Pass | Pass | GMSK | Pass | N/A |
| Apr. 18, 2018 | 3873 | Body | 1900 | 1.550 | 52.906 | Pass | Pass | Pass | GMSK | Pass | N/A |
| Apr. 25, 2018 | 3873 | Body | 2300 | 1.801 | 52.651 | Pass | Pass | Pass | N/A | N/A | N/A |
| Apr. 24, 2018 | 3873 | Body | 2450 | 1.929 | 51.582 | Pass | Pass | Pass | OFDM | N/A | Pass |
| Apr. 23, 2018 | 3873 | Body | 2600 | 2.199 | 52.350 | Pass | Pass | Pass | N/A | N/A | N/A |
| May 02, 2018 | 3873 | Body | 5250 | 5.233 | 50.915 | Pass | Pass | Pass | OFDM | N/A | Pass |
| May 02, 2018 | 3873 | Body | 5600 | 5.817 | 50.304 | Pass | Pass | Pass | OFDM | N/A | Pass |
| May 02, 2018 | 3873 | Body | 5800 | 6.115 | 49.816 | Pass | Pass | Pass | OFDM | N/A | Pass |

## 4.5 System Verification

The measuring result for system verification is tabulated as below.

| Test Date | Mode | Frequency (MHz) | 1W Target SAR-1g (W/kg) | Measured SAR-1g (W/kg) | Normalized to 1W SAR-1g (W/kg) | Deviation (%) | Dipole S/N | Probe S/N | DAE S/N |
|---|---|---|---|---|---|---|---|---|---|
| Apr. 20, 2018 | Head | 750 | 8.30 | 2.02 | 8.08 | -2.65 | 1067 | 3873 | 1341 |
| Apr. 21, 2018 | Head | 835 | 9.49 | 2.32 | 9.28 | -2.21 | 4d139 | 3873 | 1341 |
| Apr. 19, 2018 | Head | 1750 | 37.30 | 9.15 | 36.60 | -1.88 | 1071 | 3873 | 1341 |
| Apr. 18, 2018 | Head | 1900 | 39.80 | 10.20 | 40.80 | 2.51 | 5d159 | 3873 | 1341 |
| Apr. 25, 2018 | Head | 2300 | 48.90 | 12.10 | 48.40 | -1.02 | 1053 | 3873 | 1341 |
| Apr. 24, 2018 | Head | 2450 | 52.60 | 12.50 | 50.00 | -4.94 | 893 | 3873 | 1341 |
| Apr. 23, 2018 | Head | 2600 | 57.40 | 14.70 | 58.80 | 2.44 | 1110 | 3873 | 1341 |
| Apr. 26, 2018 | Head | 5250 | 78.50 | 7.98 | 79.80 | 1.66 | 1133 | 3873 | 1341 |
| Apr. 26, 2018 | Head | 5600 | 82.10 | 7.86 | 78.60 | -4.26 | 1133 | 3873 | 1341 |
| Apr. 26, 2018 | Head | 5800 | 80.10 | 7.51 | 75.10 | -6.24 | 1133 | 3873 | 1341 |
| Apr. 20, 2018 | Body | 750 | 8.77 | 2.11 | 8.44 | -3.76 | 1067 | 3873 | 1341 |
| Apr. 21, 2018 | Body | 835 | 9.71 | 2.36 | 9.44 | -2.78 | 4d139 | 3873 | 1341 |
| Apr. 19, 2018 | Body | 1750 | 38.30 | 9.54 | 38.16 | -0.37 | 1071 | 3873 | 1341 |
| Apr. 18, 2018 | Body | 1900 | 40.30 | 10.40 | 41.60 | 3.23 | 5d159 | 3873 | 1341 |
| Apr. 25, 2018 | Body | 2300 | 49.30 | 12.40 | 49.60 | 0.61 | 1053 | 3873 | 1341 |
| Apr. 24, 2018 | Body | 2450 | 51.60 | 12.80 | 51.20 | -0.78 | 893 | 3873 | 1341 |
| Apr. 23, 2018 | Body | 2600 | 53.80 | 14.40 | 57.60 | 7.06 | 1110 | 3873 | 1341 |
| May 02, 2018 | Body | 5250 | 76.60 | 7.53 | 75.30 | -1.70 | 1133 | 3873 | 1341 |
| May 02, 2018 | Body | 5600 | 78.80 | 7.83 | 78.30 | -0.63 | 1133 | 3873 | 1341 |
| May 02, 2018 | Body | 5800 | 77.20 | 7.54 | 75.40 | -2.33 | 1133 | 3873 | 1341 |

**Note:**

Comparing to the reference SAR value provided by SPEAG, the validation data should be within its specification of 10 %. The result indicates the system check can meet the variation criterion and the plots can be referred to Appendix A of this report.

## 4.6 Maximum Output Power

### 4.6.1 Maximum Conducted Power

The maximum conducted average power (Unit: dBm) including tune-up tolerance is shown as below.

| Mode | GSM850 | GSM1900 |
|---|---|---|
| GSM (GMSK, 1Tx-slot) | 33.0 | 30.5 |
| GPRS (GMSK, 1Tx-slot) | 33.0 | 30.8 |
| GPRS (GMSK, 2Tx-slot) | 32.5 | 29.8 |
| GPRS (GMSK, 3Tx-slot) | 31.5 | 28.8 |
| GPRS (GMSK, 4Tx-slot) | 30.0 | 27.8 |
| EDGE (8PSK, 1Tx-slot) | 28.5 | 27.5 |
| EDGE (8PSK, 2Tx-slot) | 27.5 | 26.5 |
| EDGE (8PSK, 3Tx-slot) | 26.5 | 25.5 |
| EDGE (8PSK, 4Tx-slot) | 25.5 | 24.5 |

| Mode | WCDMA Band II | WCDMA Band IV | WCDMA Band V |
|---|---|---|---|
| RMC 12.2K | 24.5 | 24.5 | 25.0 |
| HSDPA | 23.0 | 23.0 | 23.5 |
| HSUPA | 23.5 | 23.5 | 23.5 |

| Mode | LTE 2 | LTE 4 | LTE 5 | LTE 7 |
|---|---|---|---|---|
| QPSK / 16QAM / 64QAM | 24.0 / 23.0 / 22.0 | 24.0 / 23.0 / 22.0 | 23.5 / 22.5 / 21.5 | 23.0 / 22.0 / 21.0 |

| Mode | LTE 12 | LTE 13 | LTE 14 | LTE 25 |
|---|---|---|---|---|
| QPSK / 16QAM / 64QAM | 24.0 / 23.0 / 22.0 | 23.5 / 22.5 / 21.5 | 23.5 / 22.5 / 21.5 | 24.0 / 23.0 / 22.0 |

| Mode | LTE 26 | LTE 30 | LTE 38 | LTE 40 |
|---|---|---|---|---|
| QPSK / 16QAM / 64QAM | 24.5 / 23.5 / 22.5 | 24.0 / 23.0 / 22.0 | 23.5 / 22.5 / 21.5 | 23.5 / 22.5 / 21.5 |

| Mode | LTE 41 | LTE 66 |
|---|---|---|
| QPSK / 16QAM / 64QAM | 24.5 / 23.5 / 22.5 | 24.2 / 23.2 / 22.2 |

| Mode | 2.4G WLAN | 5.2G WLAN | 5.3G WLAN | 5.6G WLAN | 5.8G WLAN |
|---|---|---|---|---|---|
| 802.11b | 18.0 | N/A | N/A | N/A | N/A |
| 802.11g | 16.5 | N/A | N/A | N/A | N/A |
| 802.11a | N/A | 17.0 | 17.5 | 17.0 | 17.0 |
| 802.11n HT20 | 16.5 | 17.0 | 18.0 | 17.0 | 17.0 |
| 802.11n HT40 | 13.5 | 13.5 | 13.5 | 17.0 | 17.5 |
| 802.11ac VHT80 | N/A | 11.0 | 11.5 | 13.5 | 15.5 |

| Mode | 2.4G Bluetooth |
|---|---|
| GFSK | 9.5 |
| π/4-DQPSK | 6.5 |
| 8DPSK | 6.5 |
| LE | -0.5 |

### 4.6.2 Measured Conducted Power Result

The measuring conducted average power (Unit: dBm) is shown as below.

| Band | GSM850 | | | GSM1900 | | |
|---|---|---|---|---|---|---|
| Channel | 128 | 189 | 251 | 512 | 661 | 810 |
| Frequency (MHz) | 824.2 | 836.4 | 848.8 | 1850.2 | 1880.0 | 1909.8 |
| **Maximum Burst-Averaged Output Power** | | | | | | |
| GSM (GMSK, 1Tx-slot) | **32.96** | 32.93 | 32.90 | **29.94** | 29.80 | 29.92 |
| GPRS (GMSK, 1Tx-slot) | 32.95 | 32.92 | 32.89 | 29.92 | 29.78 | 29.90 |
| GPRS (GMSK, 2Tx-slot) | 32.24 | 32.21 | 32.18 | 29.10 | 28.96 | 29.08 |
| GPRS (GMSK, 3Tx-slot) | 31.17 | 31.14 | 31.11 | 27.96 | 27.82 | 27.94 |
| GPRS (GMSK, 4Tx-slot) | 29.92 | 29.89 | 29.86 | 26.79 | 26.65 | 26.77 |
| EDGE (8PSK, 1Tx-slot) | 27.35 | 27.32 | 27.29 | 26.31 | 26.17 | 26.29 |
| EDGE (8PSK, 2Tx-slot) | 27.19 | 27.16 | 27.13 | 26.19 | 26.05 | 26.17 |
| EDGE (8PSK, 3Tx-slot) | 26.02 | 25.99 | 25.96 | 26.01 | 25.87 | 25.99 |
| EDGE (8PSK, 4Tx-slot) | 24.89 | 24.86 | 24.83 | 25.78 | 25.64 | 25.76 |
| **Maximum Frame-Averaged Output Power** | | | | | | |
| GSM (GMSK, 1Tx-slot) | 23.96 | 23.93 | 23.90 | 20.94 | 20.80 | 20.92 |
| GPRS (GMSK, 1Tx-slot) | 23.95 | 23.92 | 23.89 | 20.92 | 20.78 | 20.90 |
| GPRS (GMSK, 2Tx-slot) | 26.24 | 26.21 | 26.18 | 23.10 | 22.96 | 23.08 |
| GPRS (GMSK, 3Tx-slot) | 26.91 | 26.88 | 26.85 | 23.70 | 23.56 | 23.68 |
| GPRS (GMSK, 4Tx-slot) | **26.92** | 26.89 | 26.86 | **23.79** | 23.65 | 23.77 |
| EDGE (8PSK, 1Tx-slot) | 18.35 | 18.32 | 18.29 | 17.31 | 17.17 | 17.29 |
| EDGE (8PSK, 2Tx-slot) | 21.19 | 21.16 | 21.13 | 20.19 | 20.05 | 20.17 |
| EDGE (8PSK, 3Tx-slot) | 21.76 | 21.73 | 21.70 | 21.75 | 21.61 | 21.73 |
| EDGE (8PSK, 4Tx-slot) | 21.89 | 21.86 | 21.83 | 22.78 | 22.64 | 22.76 |

**Note:**

1. SAR testing was performed on the maximum frame-averaged power mode.
2. The frame-averaged power is linearly proportion to the slot number configured and it is linearly scaled the maximum burst-averaged power based on time slots. The calculated method is shown as below:
   Frame-averaged power = 10 x log (Burst-averaged power mW x Slot used / 8)
3. The configuration of time-slot for GSM has transmitting signal in one time-slot during one frame (8 time-slots).

| Band | WCDMA Band II | | | WCDMA Band IV | | | WCDMA Band V | | | 3GPP MPR (dB) |
|---|---|---|---|---|---|---|---|---|---|---|
| Channel | 9262 | 9400 | 9538 | 1312 | 1413 | 1513 | 4132 | 4182 | 4233 | |
| Frequency (MHz) | 1852.4 | 1880.0 | 1907.6 | 1712.4 | 1732.6 | 1752.6 | 826.4 | 836.4 | 846.6 | |
| RMC 12.2K | 24.31 | 24.29 | **24.45** | 24.13 | 24.08 | **24.19** | **24.54** | 24.45 | 24.51 | - |
| HSDPA Subtest-1 | 22.82 | 22.80 | 22.96 | 22.77 | 22.72 | 22.83 | 22.86 | 22.77 | 22.83 | 0 |
| HSDPA Subtest-2 | 22.81 | 22.79 | 22.95 | 22.74 | 22.69 | 22.80 | 22.82 | 22.73 | 22.79 | 0 |
| HSDPA Subtest-3 | 22.15 | 22.13 | 22.29 | 22.22 | 22.17 | 22.28 | 22.33 | 22.24 | 22.30 | 0.5 |
| HSDPA Subtest-4 | 22.13 | 22.11 | 22.27 | 22.19 | 22.14 | 22.25 | 22.34 | 22.25 | 22.31 | 0.5 |
| HSUPA Subtest-1 | 23.25 | 23.23 | 23.39 | 22.88 | 22.83 | 22.94 | 23.41 | 23.32 | 23.38 | 0 |
| HSUPA Subtest-2 | 21.07 | 21.05 | 21.21 | 20.93 | 20.88 | 20.99 | 21.33 | 21.24 | 21.30 | 2 |
| HSUPA Subtest-3 | 22.11 | 22.09 | 22.25 | 21.95 | 21.90 | 22.01 | 22.35 | 22.26 | 22.32 | 1 |
| HSUPA Subtest-4 | 21.06 | 21.04 | 21.20 | 20.98 | 20.93 | 21.04 | 21.25 | 21.16 | 21.22 | 2 |
| HSUPA Subtest-5 | 23.21 | 23.19 | 23.35 | 22.78 | 22.73 | 22.84 | 23.25 | 23.16 | 23.22 | 0 |

| LTE Band / BW | RB Size | RB Offset | QPSK | | | 3GPP MPR (dB) | 16QAM | | | 3GPP MPR (dB) | 64QAM | | | 3GPP MPR (dB) |
|---|---|---|---|---|---|---|---|---|---|---|---|---|---|---|
| | | | Low CH 18607 1850.7 MHz | Mid CH 18900 1880.0 MHz | High CH 19193 1909.3 MHz | | Low CH 18607 1850.7 MHz | Mid CH 18900 1880.0 MHz | High CH 19193 1909.3 MHz | | Low CH 18607 1850.7 MHz | Mid CH 18900 1880.0 MHz | High CH 19193 1909.3 MHz | |
| 2 / 1.4M | 1 | 0 | 23.48 | 23.59 | 23.68 | 0 | 22.62 | 22.73 | 22.82 | 1 | 21.50 | 21.61 | 21.70 | 2 |
| | 1 | 2 | 23.36 | 23.47 | 23.56 | 0 | 22.57 | 22.68 | 22.77 | 1 | 21.38 | 21.49 | 21.58 | 2 |
| | 1 | 5 | 23.25 | 23.36 | 23.45 | 0 | 22.50 | 22.61 | 22.70 | 1 | 21.30 | 21.41 | 21.50 | 2 |
| | 3 | 0 | 23.47 | 23.58 | 23.67 | 0 | 22.60 | 22.71 | 22.80 | 1 | 20.33 | 20.44 | 20.53 | 3 |
| | 3 | 1 | 23.35 | 23.46 | 23.55 | 0 | 22.55 | 22.66 | 22.75 | 1 | 20.28 | 20.39 | 20.48 | 3 |
| | 3 | 3 | 23.24 | 23.35 | 23.44 | 0 | 22.48 | 22.59 | 22.68 | 1 | 20.27 | 20.38 | 20.47 | 3 |
| | 6 | 0 | 22.50 | 22.61 | 22.70 | 1 | 21.53 | 21.64 | 21.73 | 2 | 20.30 | 20.41 | 20.50 | 3 |

| LTE Band / BW | RB Size | RB Offset | QPSK | | | 3GPP MPR (dB) | 16QAM | | | 3GPP MPR (dB) | 64QAM | | | 3GPP MPR (dB) |
|---|---|---|---|---|---|---|---|---|---|---|---|---|---|---|
| | | | Low CH 18615 1851.5 MHz | Mid CH 18900 1880.0 MHz | High CH 19185 1908.5 MHz | | Low CH 18615 1851.5 MHz | Mid CH 18900 1880.0 MHz | High CH 19185 1908.5 MHz | | Low CH 18615 1851.5 MHz | Mid CH 18900 1880.0 MHz | High CH 19185 1908.5 MHz | |
| 2 / 3M | 1 | 0 | *23.51* | *23.62* | *23.71* | 0 | 22.65 | 22.76 | 22.85 | 1 | 21.55 | 21.66 | 21.75 | 2 |
| | 1 | 7 | *23.39* | *23.50* | *23.59* | 0 | 22.60 | 22.71 | 22.80 | 1 | 21.43 | 21.54 | 21.63 | 2 |
| | 1 | 14 | *23.28* | *23.39* | *23.48* | 0 | 22.53 | 22.64 | 22.73 | 1 | 21.35 | 21.46 | 21.55 | 2 |
| | 8 | 0 | *22.64* | *22.75* | *22.84* | 1 | 21.65 | 21.76 | 21.85 | 1 | 20.38 | 20.49 | 20.58 | 3 |
| | 8 | 3 | *22.59* | *22.70* | *22.79* | 1 | 21.63 | 21.74 | 21.83 | 1 | 20.33 | 20.44 | 20.53 | 3 |
| | 8 | 7 | *22.56* | *22.67* | *22.76* | 1 | 21.61 | 21.72 | 21.81 | 1 | 20.32 | 20.43 | 20.52 | 3 |
| | 15 | 0 | *22.53* | *22.64* | *22.73* | 1 | 21.56 | 21.67 | 21.76 | 2 | 20.35 | 20.46 | 20.55 | 3 |

| LTE Band / BW | RB Size | RB Offset | QPSK | | | 3GPP MPR (dB) | 16QAM | | | 3GPP MPR (dB) | 64QAM | | | 3GPP MPR (dB) |
|---|---|---|---|---|---|---|---|---|---|---|---|---|---|---|
| | | | Low CH 18625 1852.5 MHz | Mid CH 18900 1880.0 MHz | High CH 19175 1907.5 MHz | | Low CH 18625 1852.5 MHz | Mid CH 18900 1880.0 MHz | High CH 19175 1907.5 MHz | | Low CH 18625 1852.5 MHz | Mid CH 18900 1880.0 MHz | High CH 19175 1907.5 MHz | |
| 2 / 5M | 1 | 0 | 23.54 | 23.65 | 23.74 | 0 | 22.68 | 22.79 | 22.88 | 1 | 21.60 | 21.71 | 21.80 | 2 |
| | 1 | 12 | 23.42 | 23.53 | 23.62 | 0 | 22.63 | 22.74 | 22.83 | 1 | 21.48 | 21.59 | 21.68 | 2 |
| | 1 | 24 | 23.31 | 23.42 | 23.51 | 0 | 22.56 | 22.67 | 22.76 | 1 | 21.40 | 21.51 | 21.60 | 2 |
| | 12 | 0 | 22.67 | 22.78 | 22.87 | 0 | 21.68 | 21.79 | 21.88 | 1 | 20.43 | 20.54 | 20.63 | 3 |
| | 12 | 6 | 22.62 | 22.73 | 22.82 | 0 | 21.66 | 21.77 | 21.86 | 1 | 20.38 | 20.49 | 20.58 | 3 |
| | 12 | 13 | 22.59 | 22.70 | 22.79 | 0 | 21.64 | 21.75 | 21.84 | 1 | 20.37 | 20.48 | 20.57 | 3 |
| | 25 | 0 | 22.56 | 22.67 | 22.76 | 1 | 21.59 | 21.70 | 21.79 | 2 | 20.40 | 20.51 | 20.60 | 3 |

| LTE Band / BW | RB Size | RB Offset | QPSK | | | 3GPP MPR (dB) | 16QAM | | | 3GPP MPR (dB) | 64QAM | | | 3GPP MPR (dB) |
|---|---|---|---|---|---|---|---|---|---|---|---|---|---|---|
| | | | Low CH 18650 1855.0 MHz | Mid CH 18900 1880.0 MHz | High CH 19150 1905.0 MHz | | Low CH 18650 1855.0 MHz | Mid CH 18900 1880.0 MHz | High CH 19150 1905.0 MHz | | Low CH 18650 1855.0 MHz | Mid CH 18900 1880.0 MHz | High CH 19150 1905.0 MHz | |
| 2 / 10M | 1 | 0 | 23.56 | 23.67 | 23.76 | 0 | 22.70 | 22.81 | 22.90 | 1 | 21.65 | 21.76 | 21.85 | 2 |
| | 1 | 24 | 23.44 | 23.55 | 23.64 | 0 | 22.65 | 22.76 | 22.85 | 1 | 21.53 | 21.64 | 21.73 | 2 |
| | 1 | 49 | 23.33 | 23.44 | 23.53 | 0 | 22.58 | 22.69 | 22.78 | 1 | 21.45 | 21.56 | 21.65 | 2 |
| | 25 | 0 | 22.69 | 22.80 | 22.89 | 0 | 21.70 | 21.81 | 21.90 | 1 | 20.48 | 20.59 | 20.68 | 3 |
| | 25 | 12 | 22.64 | 22.75 | 22.84 | 0 | 21.68 | 21.79 | 21.88 | 1 | 20.43 | 20.54 | 20.63 | 3 |
| | 25 | 25 | 22.61 | 22.72 | 22.81 | 0 | 21.66 | 21.77 | 21.86 | 1 | 20.42 | 20.53 | 20.62 | 3 |
| | 50 | 0 | 22.58 | 22.69 | 22.78 | 1 | 21.61 | 21.72 | 21.81 | 2 | 20.45 | 20.56 | 20.65 | 3 |

| LTE Band / BW | RB Size | RB Offset | QPSK | | | 3GPP MPR (dB) | 16QAM | | | 3GPP MPR (dB) | 64QAM | | | 3GPP MPR (dB) |
|---|---|---|---|---|---|---|---|---|---|---|---|---|---|---|
| | | | Low CH 18675 1857.5 MHz | Mid CH 18900 1880.0 MHz | High CH 19125 1902.5 MHz | | Low CH 18675 1857.5 MHz | Mid CH 18900 1880.0 MHz | High CH 19125 1902.5 MHz | | Low CH 18675 1857.5 MHz | Mid CH 18900 1880.0 MHz | High CH 19125 1902.5 MHz | |
| 2 / 15M | 1 | 0 | 23.59 | 23.70 | 23.79 | 0 | 22.73 | 22.84 | 22.93 | 1 | 21.70 | 21.81 | 21.90 | 2 |
| | 1 | 37 | 23.47 | 23.58 | 23.67 | 0 | 22.68 | 22.79 | 22.88 | 1 | 21.58 | 21.69 | 21.78 | 2 |
| | 1 | 74 | 23.36 | 23.47 | 23.56 | 0 | 22.61 | 22.72 | 22.81 | 1 | 21.50 | 21.61 | 21.70 | 2 |
| | 36 | 0 | 22.72 | 22.83 | 22.92 | 1 | 21.73 | 21.84 | 21.93 | 1 | 20.53 | 20.64 | 20.73 | 3 |
| | 36 | 19 | 22.67 | 22.78 | 22.87 | 1 | 21.71 | 21.82 | 21.91 | 1 | 20.48 | 20.59 | 20.68 | 3 |
| | 36 | 39 | 22.64 | 22.75 | 22.84 | 1 | 21.69 | 21.80 | 21.89 | 1 | 20.47 | 20.58 | 20.67 | 3 |
| | 75 | 0 | 22.61 | 22.72 | 22.81 | 1 | 21.64 | 21.75 | 21.84 | 2 | 20.50 | 20.61 | 20.70 | 3 |

| LTE Band / BW | RB Size | RB Offset | QPSK | | | 3GPP MPR (dB) | 16QAM | | | 3GPP MPR (dB) | 64QAM | | | 3GPP MPR (dB) |
|---|---|---|---|---|---|---|---|---|---|---|---|---|---|---|
| | | | Low CH 18700 1860.0 MHz | Mid CH 18900 1880.0 MHz | High CH 19100 1900.0 MHz | | Low CH 18700 1860.0 MHz | Mid CH 18900 1880.0 MHz | High CH 19100 1900.0 MHz | | Low CH 18700 1860.0 MHz | Mid CH 18900 1880.0 MHz | High CH 19100 1900.0 MHz | |
| 2 / 20M | 1 | 0 | 23.64 | 23.75 | **23.84** | 0 | 22.78 | 22.89 | 22.98 | 1 | 21.75 | 21.86 | 21.95 | 2 |
| | 1 | 50 | 23.52 | 23.63 | 23.72 | 0 | 22.73 | 22.84 | 22.93 | 1 | 21.63 | 21.74 | 21.83 | 2 |
| | 1 | 99 | 23.41 | 23.52 | 23.61 | 0 | 22.66 | 22.77 | 22.86 | 1 | 21.55 | 21.66 | 21.75 | 2 |
| | 50 | 0 | 22.77 | 22.88 | 22.97 | 1 | 21.78 | 21.89 | 21.98 | 1 | 20.58 | 20.69 | 20.78 | 3 |
| | 50 | 25 | 22.72 | 22.83 | 22.92 | 1 | 21.76 | 21.87 | 21.96 | 1 | 20.53 | 20.64 | 20.73 | 3 |
| | 50 | 50 | 22.69 | 22.80 | 22.89 | 1 | 21.74 | 21.85 | 21.94 | 1 | 20.52 | 20.63 | 20.72 | 3 |
| | 100 | 0 | 22.66 | 22.77 | 22.86 | 1 | 21.69 | 21.80 | 21.89 | 2 | 20.55 | 20.66 | 20.75 | 3 |

| LTE Band / BW | RB Size | RB Offset | QPSK | | | 3GPP MPR (dB) | 16QAM | | | 3GPP MPR (dB) | 64QAM | | | 3GPP MPR (dB) |
|---|---|---|---|---|---|---|---|---|---|---|---|---|---|---|
| | | | Low CH 19957 1710.7 MHz | Mid CH 20175 1732.5 MHz | High CH 19193 1754.3 MHz | | Low CH 19957 1710.7 MHz | Mid CH 20175 1732.5 MHz | High CH 19193 1754.3 MHz | | Low CH 19957 1710.7 MHz | Mid CH 20175 1732.5 MHz | High CH 19193 1754.3 MHz | |
| 4 / 1.4M | 1 | 0 | 23.47 | 23.38 | 23.36 | 0 | 22.55 | 22.46 | 22.44 | 1 | 21.61 | 21.52 | 21.50 | 2 |
| | 1 | 2 | 23.33 | 23.24 | 23.22 | 0 | 22.51 | 22.42 | 22.40 | 1 | 21.57 | 21.48 | 21.46 | 2 |
| | 1 | 5 | 23.28 | 23.19 | 23.17 | 0 | 22.45 | 22.36 | 22.34 | 1 | 21.53 | 21.44 | 21.42 | 2 |
| | 3 | 0 | 23.45 | 23.36 | 23.34 | 0 | 22.54 | 22.45 | 22.43 | 1 | 20.48 | 20.39 | 20.37 | 3 |
| | 3 | 1 | 23.31 | 23.22 | 23.20 | 0 | 22.50 | 22.41 | 22.39 | 1 | 20.45 | 20.36 | 20.34 | 3 |
| | 3 | 3 | 23.26 | 23.17 | 23.15 | 0 | 22.44 | 22.35 | 22.33 | 1 | 20.41 | 20.32 | 20.30 | 3 |
| | 6 | 0 | 22.46 | 22.37 | 22.35 | 1 | 21.47 | 21.38 | 21.36 | 2 | 20.54 | 20.45 | 20.43 | 3 |

| LTE Band / BW | RB Size | RB Offset | QPSK | | | 3GPP MPR (dB) | 16QAM | | | 3GPP MPR (dB) | 64QAM | | | 3GPP MPR (dB) |
|---|---|---|---|---|---|---|---|---|---|---|---|---|---|---|
| | | | Low CH 19965 1711.5 MHz | Mid CH 20175 1732.5 MHz | High CH 20385 1753.5 MHz | | Low CH 19965 1711.5 MHz | Mid CH 20175 1732.5 MHz | High CH 20385 1753.5 MHz | | Low CH 19965 1711.5 MHz | Mid CH 20175 1732.5 MHz | High CH 20385 1753.5 MHz | |
| 4 / 3M | 1 | 0 | 23.48 | 23.39 | 23.37 | 0 | 22.56 | 22.47 | 22.45 | 1 | 21.66 | 21.57 | 21.55 | 2 |
| | 1 | 7 | 23.34 | 23.25 | 23.23 | 0 | 22.52 | 22.43 | 22.41 | 1 | 21.62 | 21.53 | 21.51 | 2 |
| | 1 | 14 | 23.29 | 23.20 | 23.18 | 0 | 22.46 | 22.37 | 22.35 | 1 | 21.58 | 21.49 | 21.47 | 2 |
| | 8 | 0 | 22.58 | 22.49 | 22.47 | 0 | 21.53 | 21.44 | 21.42 | 1 | 20.53 | 20.44 | 20.42 | 3 |
| | 8 | 3 | 22.55 | 22.46 | 22.44 | 0 | 21.49 | 21.40 | 21.38 | 1 | 20.50 | 20.41 | 20.39 | 3 |
| | 8 | 7 | 22.52 | 22.43 | 22.41 | 0 | 21.46 | 21.37 | 21.35 | 1 | 20.46 | 20.37 | 20.35 | 3 |
| | 15 | 0 | 22.47 | 22.38 | 22.36 | 1 | 21.48 | 21.39 | 21.37 | 2 | 20.59 | 20.50 | 20.48 | 3 |

| LTE Band / BW | RB Size | RB Offset | QPSK | | | 3GPP MPR (dB) | 16QAM | | | 3GPP MPR (dB) | 64QAM | | | 3GPP MPR (dB) |
|---|---|---|---|---|---|---|---|---|---|---|---|---|---|---|
| | | | Low CH 19975 1712.5 MHz | Mid CH 20175 1732.5 MHz | High CH 20375 1752.5 MHz | | Low CH 19975 1712.5 MHz | Mid CH 20175 1732.5 MHz | High CH 20375 1752.5 MHz | | Low CH 19975 1712.5 MHz | Mid CH 20175 1732.5 MHz | High CH 20375 1752.5 MHz | |
| 4 / 5M | 1 | 0 | 23.51 | 23.42 | 23.40 | 0 | 22.59 | 22.50 | 22.48 | 1 | 21.71 | 21.62 | 21.60 | 2 |
| | 1 | 12 | 23.37 | 23.28 | 23.26 | 0 | 22.55 | 22.46 | 22.44 | 1 | 21.67 | 21.58 | 21.56 | 2 |
| | 1 | 24 | 23.32 | 23.23 | 23.21 | 0 | 22.49 | 22.40 | 22.38 | 1 | 21.63 | 21.54 | 21.52 | 2 |
| | 12 | 0 | 22.61 | 22.52 | 22.50 | 0 | 21.56 | 21.47 | 21.45 | 1 | 20.58 | 20.49 | 20.47 | 3 |
| | 12 | 6 | 22.58 | 22.49 | 22.47 | 0 | 21.52 | 21.43 | 21.41 | 1 | 20.55 | 20.46 | 20.44 | 3 |
| | 12 | 13 | 22.55 | 22.46 | 22.44 | 0 | 21.49 | 21.40 | 21.38 | 1 | 20.51 | 20.42 | 20.40 | 3 |
| | 25 | 0 | 22.50 | 22.41 | 22.39 | 1 | 21.51 | 21.42 | 21.40 | 2 | 20.64 | 20.55 | 20.53 | 3 |

| LTE Band / BW | RB Size | RB Offset | QPSK | | | 3GPP MPR (dB) | 16QAM | | | 3GPP MPR (dB) | 64QAM | | | 3GPP MPR (dB) |
|---|---|---|---|---|---|---|---|---|---|---|---|---|---|---|
| | | | Low CH 20000 1715.0 MHz | Mid CH 20175 1732.5 MHz | High CH 20350 1750.0 MHz | | Low CH 20000 1715.0 MHz | Mid CH 20175 1732.5 MHz | High CH 20350 1750.0 MHz | | Low CH 20000 1715.0 MHz | Mid CH 20175 1732.5 MHz | High CH 20350 1750.0 MHz | |
| 4 / 10M | 1 | 0 | 23.55 | 23.46 | 23.44 | 0 | 22.63 | 22.54 | 22.52 | 1 | 21.76 | 21.67 | 21.65 | 2 |
| | 1 | 24 | 23.41 | 23.32 | 23.30 | 0 | 22.59 | 22.50 | 22.48 | 1 | 21.72 | 21.63 | 21.61 | 2 |
| | 1 | 49 | 23.36 | 23.27 | 23.25 | 0 | 22.53 | 22.44 | 22.42 | 1 | 21.68 | 21.59 | 21.57 | 2 |
| | 25 | 0 | 22.65 | 22.56 | 22.54 | 0 | 21.60 | 21.51 | 21.49 | 1 | 20.63 | 20.54 | 20.52 | 3 |
| | 25 | 12 | 22.62 | 22.53 | 22.51 | 0 | 21.56 | 21.47 | 21.45 | 1 | 20.60 | 20.51 | 20.49 | 3 |
| | 25 | 25 | 22.59 | 22.50 | 22.48 | 0 | 21.53 | 21.44 | 21.42 | 1 | 20.56 | 20.47 | 20.45 | 3 |
| | 50 | 0 | 22.54 | 22.45 | 22.43 | 1 | 21.55 | 21.46 | 21.44 | 2 | 20.69 | 20.60 | 20.58 | 3 |

| LTE Band / BW | RB Size | RB Offset | QPSK | | | 3GPP MPR (dB) | 16QAM | | | 3GPP MPR (dB) | 64QAM | | | 3GPP MPR (dB) |
|---|---|---|---|---|---|---|---|---|---|---|---|---|---|---|
| | | | Low CH 20025 1717.5 MHz | Mid CH 20175 1732.5 MHz | High CH 20325 1747.5 MHz | | Low CH 20025 1717.5 MHz | Mid CH 20175 1732.5 MHz | High CH 20325 1747.5 MHz | | Low CH 20025 1717.5 MHz | Mid CH 20175 1732.5 MHz | High CH 20325 1747.5 MHz | |
| 4 / 15M | 1 | 0 | 23.61 | 23.52 | 23.50 | 0 | 22.69 | 22.60 | 22.58 | 1 | 21.81 | 21.72 | 21.70 | 2 |
| | 1 | 37 | 23.47 | 23.38 | 23.36 | 0 | 22.65 | 22.56 | 22.54 | 1 | 21.77 | 21.68 | 21.66 | 2 |
| | 1 | 74 | 23.42 | 23.33 | 23.31 | 0 | 22.59 | 22.50 | 22.48 | 1 | 21.73 | 21.64 | 21.62 | 2 |
| | 36 | 0 | 22.71 | 22.62 | 22.60 | 0 | 21.66 | 21.57 | 21.55 | 1 | 20.68 | 20.59 | 20.57 | 3 |
| | 36 | 19 | 22.68 | 22.59 | 22.57 | 0 | 21.62 | 21.53 | 21.51 | 1 | 20.65 | 20.56 | 20.54 | 3 |
| | 36 | 39 | 22.65 | 22.56 | 22.54 | 0 | 21.59 | 21.50 | 21.48 | 1 | 20.61 | 20.52 | 20.50 | 3 |
| | 75 | 0 | 22.60 | 22.51 | 22.49 | 1 | 21.61 | 21.52 | 21.50 | 2 | 20.74 | 20.65 | 20.63 | 3 |

| LTE Band / BW | RB Size | RB Offset | QPSK | | | 3GPP MPR (dB) | 16QAM | | | 3GPP MPR (dB) | 64QAM | | | 3GPP MPR (dB) |
|---|---|---|---|---|---|---|---|---|---|---|---|---|---|---|
| | | | Low CH 20050 1720.0 MHz | Mid CH 20175 1732.5 MHz | High CH 20300 1745.0 MHz | | Low CH 20050 1720.0 MHz | Mid CH 20175 1732.5 MHz | High CH 20300 1745.0 MHz | | Low CH 20050 1720.0 MHz | Mid CH 20175 1732.5 MHz | High CH 20300 1745.0 MHz | |
| 4 / 20M | 1 | 0 | **23.64** | 23.55 | 23.53 | 0 | 22.72 | 22.63 | 22.61 | 1 | 21.86 | 21.77 | 21.75 | 2 |
| | 1 | 50 | 23.50 | 23.41 | 23.39 | 0 | 22.68 | 22.59 | 22.57 | 1 | 21.82 | 21.73 | 21.71 | 2 |
| | 1 | 99 | 23.45 | 23.36 | 23.34 | 0 | 22.62 | 22.53 | 22.51 | 1 | 21.78 | 21.69 | 21.67 | 2 |
| | 50 | 0 | 22.74 | 22.65 | 22.63 | 0 | 21.69 | 21.60 | 21.58 | 1 | 20.73 | 20.64 | 20.62 | 3 |
| | 50 | 25 | 22.71 | 22.62 | 22.60 | 0 | 21.65 | 21.56 | 21.54 | 1 | 20.70 | 20.61 | 20.59 | 3 |
| | 50 | 50 | 22.68 | 22.59 | 22.57 | 0 | 21.62 | 21.53 | 21.51 | 1 | 20.66 | 20.57 | 20.55 | 3 |
| | 100 | 0 | 22.63 | 22.54 | 22.52 | 1 | 21.64 | 21.55 | 21.53 | 2 | 20.79 | 20.70 | 20.68 | 3 |

| LTE Band / BW | RB Size | RB Offset | QPSK | | | 3GPP MPR (dB) | 16QAM | | | 3GPP MPR (dB) | 64QAM | | | 3GPP MPR (dB) |
|---|---|---|---|---|---|---|---|---|---|---|---|---|---|---|
| | | | Low CH 20407 824.7 MHz | Mid CH 20525 836.5 MHz | High CH 20643 848.3 MHz | | Low CH 20407 824.7 MHz | Mid CH 20525 836.5 MHz | High CH 20643 848.3 MHz | | Low CH 20407 824.7 MHz | Mid CH 20525 836.5 MHz | High CH 20643 848.3 MHz | |
| 5 / 1.4M | 1 | 0 | 22.83 | 22.81 | 22.86 | 0 | 21.92 | 21.90 | 21.95 | 1 | 20.88 | 20.86 | 20.91 | 2 |
| | 1 | 2 | 22.81 | 22.79 | 22.84 | 0 | 21.88 | 21.86 | 21.91 | 1 | 20.84 | 20.82 | 20.87 | 2 |
| | 1 | 5 | 22.65 | 22.63 | 22.68 | 0 | 21.86 | 21.84 | 21.89 | 1 | 20.81 | 20.79 | 20.84 | 2 |
| | 3 | 0 | 22.81 | 22.79 | 22.84 | 0 | 21.91 | 21.89 | 21.94 | 1 | 19.93 | 19.91 | 19.96 | 3 |
| | 3 | 1 | 22.79 | 22.77 | 22.82 | 0 | 21.87 | 21.85 | 21.90 | 1 | 19.88 | 19.86 | 19.91 | 3 |
| | 3 | 3 | 22.63 | 22.61 | 22.66 | 0 | 21.85 | 21.83 | 21.88 | 1 | 19.83 | 19.81 | 19.86 | 3 |
| | 6 | 0 | 21.90 | 21.88 | 21.93 | 1 | 20.91 | 20.89 | 20.94 | 2 | 19.91 | 19.89 | 19.94 | 3 |

| LTE Band / BW | RB Size | RB Offset | QPSK | | | 3GPP MPR (dB) | 16QAM | | | 3GPP MPR (dB) | 64QAM | | | 3GPP MPR (dB) |
|---|---|---|---|---|---|---|---|---|---|---|---|---|---|---|
| | | | Low CH 20415 825.5 MHz | Mid CH 20525 836.5 MHz | High CH 20635 847.5 MHz | | Low CH 20415 825.5 MHz | Mid CH 20525 836.5 MHz | High CH 20635 847.5 MHz | | Low CH 20415 825.5 MHz | Mid CH 20525 836.5 MHz | High CH 20635 847.5 MHz | |
| 5 / 3M | 1 | 0 | 22.87 | 22.85 | 22.90 | 0 | 21.96 | 21.94 | 21.99 | 1 | 20.93 | 20.91 | 20.96 | 2 |
| | 1 | 7 | 22.85 | 22.83 | 22.88 | 0 | 21.92 | 21.90 | 21.95 | 1 | 20.89 | 20.87 | 20.92 | 2 |
| | 1 | 14 | 22.69 | 22.67 | 22.72 | 0 | 21.90 | 21.88 | 21.93 | 1 | 20.86 | 20.84 | 20.89 | 2 |
| | 8 | 0 | 21.96 | 21.94 | 21.99 | 0 | 20.91 | 20.89 | 20.94 | 1 | 19.98 | 19.96 | 20.01 | 3 |
| | 8 | 3 | 21.94 | 21.92 | 21.97 | 0 | 20.87 | 20.85 | 20.90 | 1 | 19.93 | 19.91 | 19.96 | 3 |
| | 8 | 7 | 21.91 | 21.89 | 21.94 | 0 | 20.83 | 20.81 | 20.86 | 1 | 19.88 | 19.86 | 19.91 | 3 |
| | 15 | 0 | 21.94 | 21.92 | 21.97 | 1 | 20.95 | 20.93 | 20.98 | 2 | 19.96 | 19.94 | 19.99 | 3 |

| LTE Band / BW | RB Size | RB Offset | QPSK | | | 3GPP MPR (dB) | 16QAM | | | 3GPP MPR (dB) | 64QAM | | | 3GPP MPR (dB) |
|---|---|---|---|---|---|---|---|---|---|---|---|---|---|---|
| | | | Low CH 20425 826.5 MHz | Mid CH 20525 836.5 MHz | High CH 20625 846.5 MHz | | Low CH 20425 826.5 MHz | Mid CH 20525 836.5 MHz | High CH 20625 846.5 MHz | | Low CH 20425 826.5 MHz | Mid CH 20525 836.5 MHz | High CH 20625 846.5 MHz | |
| 5 / 5M | 1 | 0 | 22.93 | 22.91 | 22.96 | 0 | 22.02 | 22.00 | 22.05 | 1 | 20.98 | 20.96 | 21.01 | 2 |
| | 1 | 12 | 22.91 | 22.89 | 22.94 | 0 | 21.98 | 21.96 | 22.01 | 1 | 20.94 | 20.92 | 20.97 | 2 |
| | 1 | 24 | 22.75 | 22.73 | 22.78 | 0 | 21.96 | 21.94 | 21.99 | 1 | 20.91 | 20.89 | 20.94 | 2 |
| | 12 | 0 | 22.02 | 22.00 | 22.05 | 0 | 20.97 | 20.95 | 21.00 | 1 | 20.03 | 20.01 | 20.06 | 3 |
| | 12 | 6 | 22.00 | 21.98 | 22.03 | 0 | 20.93 | 20.91 | 20.96 | 1 | 19.98 | 19.96 | 20.01 | 3 |
| | 12 | 13 | 21.97 | 21.95 | 22.00 | 0 | 20.89 | 20.87 | 20.92 | 1 | 19.93 | 19.91 | 19.96 | 3 |
| | 25 | 0 | 22.00 | 21.98 | 22.03 | 1 | 21.01 | 20.99 | 21.04 | 2 | 20.01 | 19.99 | 20.04 | 3 |

| LTE Band / BW | RB Size | RB Offset | QPSK | | | 3GPP MPR (dB) | 16QAM | | | 3GPP MPR (dB) | 64QAM | | | 3GPP MPR (dB) |
|---|---|---|---|---|---|---|---|---|---|---|---|---|---|---|
| | | | Low CH 20450 829.0 MHz | Mid CH 20525 836.5 MHz | High CH 20600 844.0 MHz | | Low CH 20450 829.0 MHz | Mid CH 20525 836.5 MHz | High CH 20600 844.0 MHz | | Low CH 20450 829.0 MHz | Mid CH 20525 836.5 MHz | High CH 20600 844.0 MHz | |
| 5 / 10M | 1 | 0 | 22.96 | 22.94 | **22.99** | 0 | 22.05 | 22.03 | 22.08 | 1 | 21.03 | 21.01 | 21.06 | 2 |
| | 1 | 24 | 22.94 | 22.92 | 22.97 | 0 | 22.01 | 21.99 | 22.04 | 1 | 20.99 | 20.97 | 21.02 | 2 |
| | 1 | 49 | 22.78 | 22.76 | 22.81 | 0 | 21.99 | 21.97 | 22.02 | 1 | 20.96 | 20.94 | 20.99 | 2 |
| | 25 | 0 | 22.05 | 22.03 | 22.08 | 0 | 21.00 | 20.98 | 21.03 | 1 | 20.08 | 20.06 | 20.11 | 3 |
| | 25 | 12 | 22.03 | 22.01 | 22.06 | 0 | 20.96 | 20.94 | 20.99 | 1 | 20.03 | 20.01 | 20.06 | 3 |
| | 25 | 25 | 22.00 | 21.98 | 22.03 | 0 | 20.92 | 20.90 | 20.95 | 1 | 19.98 | 19.96 | 20.01 | 3 |
| | 50 | 0 | 22.03 | 22.01 | 22.06 | 1 | 21.04 | 21.02 | 21.07 | 2 | 20.06 | 20.04 | 20.09 | 3 |

| LTE Band / BW | RB Size | RB Offset | QPSK | | | 3GPP MPR (dB) | 16QAM | | | 3GPP MPR (dB) | 64QAM | | | 3GPP MPR (dB) |
|---|---|---|---|---|---|---|---|---|---|---|---|---|---|---|
| | | | Low CH 20775 2502.5 MHz | Mid CH 21100 2535.0 MHz | High CH 21425 2567.5 MHz | | Low CH 20775 2502.5 MHz | Mid CH 21100 2535.0 MHz | High CH 21425 2567.5 MHz | | Low CH 20775 2502.5 MHz | Mid CH 21100 2535.0 MHz | High CH 21425 2567.5 MHz | |
| 7 / 5M | 1 | 0 | 22.39 | 22.48 | 22.51 | 0 | 21.36 | 21.45 | 21.48 | 1 | 20.37 | 20.46 | 20.49 | 2 |
| | 1 | 12 | 22.33 | 22.42 | 22.45 | 0 | 21.32 | 21.41 | 21.44 | 1 | 20.34 | 20.43 | 20.46 | 2 |
| | 1 | 24 | 22.22 | 22.31 | 22.34 | 0 | 21.29 | 21.38 | 21.41 | 1 | 20.30 | 20.39 | 20.42 | 2 |
| | 12 | 0 | 21.51 | 21.60 | 21.63 | 0 | 20.50 | 20.59 | 20.62 | 1 | 19.42 | 19.51 | 19.54 | 3 |
| | 12 | 6 | 21.47 | 21.56 | 21.59 | 0 | 20.47 | 20.56 | 20.59 | 1 | 19.37 | 19.46 | 19.49 | 3 |
| | 12 | 13 | 21.42 | 21.51 | 21.54 | 0 | 20.42 | 20.51 | 20.54 | 1 | 19.34 | 19.43 | 19.46 | 3 |
| | 25 | 0 | 21.50 | 21.59 | 21.62 | 1 | 20.52 | 20.61 | 20.64 | 2 | 19.54 | 19.63 | 19.66 | 3 |

| LTE Band / BW | RB Size | RB Offset | QPSK | | | 3GPP MPR (dB) | 16QAM | | | 3GPP MPR (dB) | 64QAM | | | 3GPP MPR (dB) |
|---|---|---|---|---|---|---|---|---|---|---|---|---|---|---|
| | | | Low CH 20800 2505.0 MHz | Mid CH 21100 2535.0 MHz | High CH 21400 2565.0 MHz | | Low CH 20800 2505.0 MHz | Mid CH 21100 2535.0 MHz | High CH 21400 2565.0 MHz | | Low CH 20800 2505.0 MHz | Mid CH 21100 2535.0 MHz | High CH 21400 2565.0 MHz | |
| 7 / 10M | 1 | 0 | 22.43 | 22.52 | 22.55 | 0 | 21.40 | 21.49 | 21.52 | 1 | 20.42 | 20.51 | 20.54 | 2 |
| | 1 | 24 | 22.37 | 22.46 | 22.49 | 0 | 21.36 | 21.45 | 21.48 | 1 | 20.39 | 20.48 | 20.51 | 2 |
| | 1 | 49 | 22.26 | 22.35 | 22.38 | 0 | 21.33 | 21.42 | 21.45 | 1 | 20.35 | 20.44 | 20.47 | 2 |
| | 25 | 0 | 21.55 | 21.64 | 21.67 | 0 | 20.54 | 20.63 | 20.66 | 1 | 19.47 | 19.56 | 19.59 | 3 |
| | 25 | 12 | 21.51 | 21.60 | 21.63 | 0 | 20.51 | 20.60 | 20.63 | 1 | 19.42 | 19.51 | 19.54 | 3 |
| | 25 | 25 | 21.46 | 21.55 | 21.58 | 0 | 20.46 | 20.55 | 20.58 | 1 | 19.39 | 19.48 | 19.51 | 3 |
| | 50 | 0 | 21.54 | 21.63 | 21.66 | 1 | 20.56 | 20.65 | 20.68 | 2 | 19.59 | 19.68 | 19.71 | 3 |

| LTE Band / BW | RB Size | RB Offset | QPSK Low CH 20825 2507.5 MHz | QPSK Mid CH 21100 2535.0 MHz | QPSK High CH 21375 2562.5 MHz | 3GPP MPR (dB) | 16QAM Low CH 20825 2507.5 MHz | 16QAM Mid CH 21100 2535.0 MHz | 16QAM High CH 21375 2562.5 MHz | 3GPP MPR (dB) | 64QAM Low CH 20825 2507.5 MHz | 64QAM Mid CH 21100 2535.0 MHz | 64QAM High CH 21375 2562.5 MHz | 3GPP MPR (dB) |
|---|---|---|---|---|---|---|---|---|---|---|---|---|---|---|
| 7 / 15M | 1 | 0 | 22.49 | 22.58 | 22.61 | 0 | 21.46 | 21.55 | 21.58 | 1 | 20.47 | 20.56 | 20.59 | 2 |
| | 1 | 37 | 22.43 | 22.52 | 22.55 | 0 | 21.42 | 21.51 | 21.54 | 1 | 20.44 | 20.53 | 20.56 | 2 |
| | 1 | 74 | 22.32 | 22.41 | 22.44 | 0 | 21.39 | 21.48 | 21.51 | 1 | 20.40 | 20.49 | 20.52 | 2 |
| | 36 | 0 | 21.61 | 21.70 | 21.73 | 0 | 20.60 | 20.69 | 20.72 | 1 | 19.52 | 19.61 | 19.64 | 3 |
| | 36 | 19 | 21.57 | 21.66 | 21.69 | 0 | 20.57 | 20.66 | 20.69 | 1 | 19.47 | 19.56 | 19.59 | 3 |
| | 36 | 39 | 21.52 | 21.61 | 21.64 | 0 | 20.52 | 20.61 | 20.64 | 1 | 19.44 | 19.53 | 19.56 | 3 |
| | 75 | 0 | 21.60 | 21.69 | 21.72 | 1 | 20.62 | 20.71 | 20.74 | 2 | 19.64 | 19.73 | 19.76 | 3 |

| LTE Band / BW | RB Size | RB Offset | QPSK Low CH 20850 2510.0 MHz | QPSK Mid CH 21100 2535.0 MHz | QPSK High CH 21350 2560.0 MHz | 3GPP MPR (dB) | 16QAM Low CH 20850 2510.0 MHz | 16QAM Mid CH 21100 2535.0 MHz | 16QAM High CH 21350 2560.0 MHz | 3GPP MPR (dB) | 64QAM Low CH 20850 2510.0 MHz | 64QAM Mid CH 21100 2535.0 MHz | 64QAM High CH 21350 2560.0 MHz | 3GPP MPR (dB) |
|---|---|---|---|---|---|---|---|---|---|---|---|---|---|---|
| 7 / 20M | 1 | 0 | 22.52 | 22.61 | **22.64** | 0 | 21.49 | 21.58 | 21.61 | 1 | 20.52 | 20.61 | 20.64 | 2 |
| | 1 | 50 | 22.46 | 22.55 | 22.58 | 0 | 21.45 | 21.54 | 21.57 | 1 | 20.49 | 20.58 | 20.61 | 2 |
| | 1 | 99 | 22.35 | 22.44 | 22.47 | 0 | 21.42 | 21.51 | 21.54 | 1 | 20.45 | 20.54 | 20.57 | 2 |
| | 50 | 0 | 21.64 | 21.73 | 21.76 | 0 | 20.63 | 20.72 | 20.75 | 1 | 19.57 | 19.66 | 19.69 | 3 |
| | 50 | 25 | 21.60 | 21.69 | 21.72 | 0 | 20.60 | 20.69 | 20.72 | 1 | 19.52 | 19.61 | 19.64 | 3 |
| | 50 | 50 | 21.55 | 21.64 | 21.67 | 0 | 20.55 | 20.64 | 20.67 | 1 | 19.49 | 19.58 | 19.61 | 3 |
| | 100 | 0 | 21.63 | 21.72 | 21.75 | 1 | 20.65 | 20.74 | 20.77 | 2 | 19.69 | 19.78 | 19.81 | 3 |

| LTE Band / BW | RB Size | RB Offset | QPSK Low CH 23017 699.7 MHz | QPSK Mid CH 23095 707.5 MHz | QPSK High CH 23173 715.3 MHz | 3GPP MPR (dB) | 16QAM Low CH 23017 699.7 MHz | 16QAM Mid CH 23095 707.5 MHz | 16QAM High CH 23173 715.3 MHz | 3GPP MPR (dB) | 64QAM Low CH 23017 699.7 MHz | 64QAM Mid CH 23095 707.5 MHz | 64QAM High CH 23173 715.3 MHz | 3GPP MPR (dB) |
|---|---|---|---|---|---|---|---|---|---|---|---|---|---|---|
| 12 / 1.4M | 1 | 0 | 23.31 | 23.35 | 23.45 | 0 | 22.43 | 22.47 | 22.57 | 1 | 21.49 | 21.53 | 21.63 | 2 |
| | 1 | 2 | 23.26 | 23.30 | 23.40 | 0 | 22.40 | 22.44 | 22.54 | 1 | 21.44 | 21.48 | 21.58 | 2 |
| | 1 | 5 | 23.21 | 23.25 | 23.35 | 0 | 22.35 | 22.39 | 22.49 | 1 | 21.40 | 21.44 | 21.54 | 2 |
| | 3 | 0 | 23.29 | 23.33 | 23.43 | 0 | 22.42 | 22.46 | 22.56 | 1 | 20.34 | 20.38 | 20.48 | 3 |
| | 3 | 1 | 23.24 | 23.28 | 23.38 | 0 | 22.39 | 22.43 | 22.53 | 1 | 20.31 | 20.35 | 20.45 | 3 |
| | 3 | 3 | 23.19 | 23.23 | 23.33 | 0 | 22.34 | 22.38 | 22.48 | 1 | 20.27 | 20.31 | 20.41 | 3 |
| | 6 | 0 | 22.40 | 22.44 | 22.54 | 1 | 21.38 | 21.42 | 21.52 | 2 | 20.33 | 20.37 | 20.47 | 3 |

| LTE Band / BW | RB Size | RB Offset | QPSK Low CH 23025 700.5 MHz | QPSK Mid CH 23095 707.5 MHz | QPSK High CH 23165 714.5 MHz | 3GPP MPR (dB) | 16QAM Low CH 23025 700.5 MHz | 16QAM Mid CH 23095 707.5 MHz | 16QAM High CH 23165 714.5 MHz | 3GPP MPR (dB) | 64QAM Low CH 23025 700.5 MHz | 64QAM Mid CH 23095 707.5 MHz | 64QAM High CH 23165 714.5 MHz | 3GPP MPR (dB) |
|---|---|---|---|---|---|---|---|---|---|---|---|---|---|---|
| 12 / 3M | 1 | 0 | 23.35 | 23.39 | 23.49 | 0 | 22.47 | 22.51 | 22.61 | 1 | 21.54 | 21.58 | 21.68 | 2 |
| | 1 | 7 | 23.30 | 23.34 | 23.44 | 0 | 22.44 | 22.48 | 22.58 | 1 | 21.49 | 21.53 | 21.63 | 2 |
| | 1 | 14 | 23.25 | 23.29 | 23.39 | 0 | 22.39 | 22.43 | 22.53 | 1 | 21.45 | 21.49 | 21.59 | 2 |
| | 8 | 0 | 22.45 | 22.49 | 22.59 | 0 | 21.47 | 21.51 | 21.61 | 1 | 20.39 | 20.43 | 20.53 | 3 |
| | 8 | 3 | 22.40 | 22.44 | 22.54 | 0 | 21.44 | 21.48 | 21.58 | 1 | 20.36 | 20.40 | 20.50 | 3 |
| | 8 | 7 | 22.37 | 22.41 | 22.51 | 0 | 21.40 | 21.44 | 21.54 | 1 | 20.32 | 20.36 | 20.46 | 3 |
| | 15 | 0 | 22.44 | 22.48 | 22.58 | 1 | 21.42 | 21.46 | 21.56 | 2 | 20.38 | 20.42 | 20.52 | 3 |

| LTE Band / BW | RB Size | RB Offset | QPSK Low CH 23035 701.5 MHz | QPSK Mid CH 23095 707.5 MHz | QPSK High CH 23155 713.5 MHz | 3GPP MPR (dB) | 16QAM Low CH 23035 701.5 MHz | 16QAM Mid CH 23095 707.5 MHz | 16QAM High CH 23155 713.5 MHz | 3GPP MPR (dB) | 64QAM Low CH 23035 701.5 MHz | 64QAM Mid CH 23095 707.5 MHz | 64QAM High CH 23155 713.5 MHz | 3GPP MPR (dB) |
|---|---|---|---|---|---|---|---|---|---|---|---|---|---|---|
| 12 / 5M | 1 | 0 | 23.41 | 23.45 | 23.55 | 0 | 22.53 | 22.57 | 22.67 | 1 | 21.59 | 21.63 | 21.73 | 2 |
| | 1 | 12 | 23.36 | 23.40 | 23.50 | 0 | 22.50 | 22.54 | 22.64 | 1 | 21.54 | 21.58 | 21.68 | 2 |
| | 1 | 24 | 23.31 | 23.35 | 23.45 | 0 | 22.45 | 22.49 | 22.59 | 1 | 21.50 | 21.54 | 21.64 | 2 |
| | 12 | 0 | 22.51 | 22.55 | 22.65 | 0 | 21.53 | 21.57 | 21.67 | 1 | 20.44 | 20.48 | 20.58 | 3 |
| | 12 | 6 | 22.46 | 22.50 | 22.60 | 0 | 21.50 | 21.54 | 21.64 | 1 | 20.41 | 20.45 | 20.55 | 3 |
| | 12 | 13 | 22.43 | 22.47 | 22.57 | 0 | 21.46 | 21.50 | 21.60 | 1 | 20.37 | 20.41 | 20.51 | 3 |
| | 25 | 0 | 22.50 | 22.54 | 22.64 | 1 | 21.48 | 21.52 | 21.62 | 2 | 20.43 | 20.47 | 20.57 | 3 |

| LTE Band / BW | RB Size | RB Offset | QPSK Low CH 23060 704.0 MHz | QPSK Mid CH 23095 707.5 MHz | QPSK High CH 23130 711.0 MHz | 3GPP MPR (dB) | 16QAM Low CH 23060 704.0 MHz | 16QAM Mid CH 23095 707.5 MHz | 16QAM High CH 23130 711.0 MHz | 3GPP MPR (dB) | 64QAM Low CH 23060 704.0 MHz | 64QAM Mid CH 23095 707.5 MHz | 64QAM High CH 23130 711.0 MHz | 3GPP MPR (dB) |
|---|---|---|---|---|---|---|---|---|---|---|---|---|---|---|
| 12 / 10M | 1 | 0 | 23.44 | 23.48 | **23.58** | 0 | 22.56 | 22.60 | 22.70 | 1 | 21.64 | 21.68 | 21.78 | 2 |
| | 1 | 24 | 23.39 | 23.43 | 23.53 | 0 | 22.53 | 22.57 | 22.67 | 1 | 21.59 | 21.63 | 21.73 | 2 |
| | 1 | 49 | 23.34 | 23.38 | 23.48 | 0 | 22.48 | 22.52 | 22.62 | 1 | 21.55 | 21.59 | 21.69 | 2 |
| | 25 | 0 | 22.54 | 22.58 | 22.68 | 0 | 21.56 | 21.60 | 21.70 | 1 | 20.49 | 20.53 | 20.63 | 3 |
| | 25 | 12 | 22.49 | 22.53 | 22.63 | 0 | 21.53 | 21.57 | 21.67 | 1 | 20.46 | 20.50 | 20.60 | 3 |
| | 25 | 25 | 22.46 | 22.50 | 22.60 | 0 | 21.49 | 21.53 | 21.63 | 1 | 20.42 | 20.46 | 20.56 | 3 |
| | 50 | 0 | 22.53 | 22.57 | 22.67 | 1 | 21.51 | 21.55 | 21.65 | 2 | 20.48 | 20.52 | 20.62 | 3 |

| LTE Band / BW | RB Size | RB Offset | QPSK Low CH 23205 779.5 MHz | QPSK Mid CH 23230 782.0 MHz | QPSK High CH 23255 784.5 MHz | 3GPP MPR (dB) | 16QAM Low CH 23205 779.5 MHz | 16QAM Mid CH 23230 782.0 MHz | 16QAM High CH 23255 784.5 MHz | 3GPP MPR (dB) | 64QAM Low CH 23205 779.5 MHz | 64QAM Mid CH 23230 782.0 MHz | 64QAM High CH 23255 784.5 MHz | 3GPP MPR (dB) |
|---|---|---|---|---|---|---|---|---|---|---|---|---|---|---|
| 13 / 5M | 1 | 0 | 23.08 | 23.21 | 23.12 | 0 | 22.23 | 22.36 | 22.27 | 1 | 21.14 | 21.27 | 21.18 | 2 |
| | 1 | 12 | 23.03 | 23.16 | 23.07 | 0 | 22.20 | 22.33 | 22.24 | 1 | 21.10 | 21.23 | 21.14 | 2 |
| | 1 | 24 | 22.99 | 23.12 | 23.03 | 0 | 22.16 | 22.29 | 22.20 | 1 | 21.07 | 21.20 | 21.11 | 2 |
| | 12 | 0 | 22.16 | 22.29 | 22.20 | 0 | 21.16 | 21.29 | 21.20 | 1 | 21.13 | 21.26 | 21.17 | 3 |
| | 12 | 6 | 22.11 | 22.24 | 22.15 | 0 | 21.12 | 21.25 | 21.16 | 1 | 21.09 | 21.22 | 21.13 | 3 |
| | 12 | 13 | 22.08 | 22.21 | 22.12 | 0 | 21.09 | 21.22 | 21.13 | 1 | 21.06 | 21.19 | 21.10 | 3 |
| | 25 | 0 | 22.15 | 22.28 | 22.19 | 1 | 21.12 | 21.25 | 21.16 | 2 | 20.12 | 20.25 | 20.16 | 3 |

| LTE Band / BW | RB Size | RB Offset | QPSK Mid CH 23230 782.0 MHz | 3GPP MPR (dB) | 16QAM Mid CH 23230 782.0 MHz | 3GPP MPR (dB) | 64QAM Mid CH 23230 782.0 MHz | 3GPP MPR (dB) |
|---|---|---|---|---|---|---|---|---|
| 13 / 10M | 1 | 0 | **23.19** | 0 | 22.30 | 1 | 21.31 | 2 |
| | 1 | 24 | 23.14 | 0 | 22.25 | 1 | 21.27 | 2 |
| | 1 | 49 | 23.11 | 0 | 22.21 | 1 | 21.24 | 2 |
| | 25 | 0 | 22.29 | 0 | 21.23 | 1 | 20.31 | 3 |
| | 25 | 12 | 22.25 | 0 | 21.20 | 1 | 20.27 | 3 |
| | 25 | 25 | 22.21 | 0 | 21.16 | 1 | 20.23 | 3 |
| | 50 | 0 | 22.27 | 1 | 21.22 | 2 | 20.29 | 3 |

| LTE Band / BW | RB Size | RB Offset | QPSK Low CH 23305 790.5 MHz | QPSK Mid CH 23330 793.0 MHz | QPSK High CH 23355 795.5 MHz | 3GPP MPR (dB) | 16QAM Low CH 23305 790.5 MHz | 16QAM Mid CH 23330 793.0 MHz | 16QAM High CH 23355 795.5 MHz | 3GPP MPR (dB) | 64QAM Low CH 23305 790.5 MHz | 64QAM Mid CH 23330 793.0 MHz | 64QAM High CH 23355 795.5 MHz | 3GPP MPR (dB) |
|---|---|---|---|---|---|---|---|---|---|---|---|---|---|---|
| 14 / 5M | 1 | 0 | 23.15 | 23.19 | 23.21 | 0 | 22.23 | 22.27 | 22.29 | 1 | 21.45 | 21.49 | 21.51 | 2 |
| | 1 | 12 | 23.12 | 23.16 | 23.18 | 0 | 22.19 | 22.23 | 22.25 | 1 | 21.38 | 21.42 | 21.44 | 2 |
| | 1 | 24 | 23.08 | 23.12 | 23.14 | 0 | 22.16 | 22.20 | 22.22 | 1 | 21.33 | 21.37 | 21.39 | 2 |
| | 12 | 0 | 22.28 | 22.32 | 22.34 | 0 | 21.22 | 21.26 | 21.28 | 1 | 21.44 | 21.48 | 21.50 | 3 |
| | 12 | 6 | 22.25 | 22.29 | 22.31 | 0 | 21.19 | 21.23 | 21.25 | 1 | 21.37 | 21.41 | 21.43 | 3 |
| | 12 | 13 | 22.21 | 22.25 | 22.27 | 0 | 21.15 | 21.19 | 21.21 | 1 | 21.32 | 21.36 | 21.38 | 3 |
| | 25 | 0 | 22.25 | 22.29 | 22.31 | 1 | 21.22 | 21.26 | 21.28 | 2 | 20.29 | 20.33 | 20.35 | 3 |

| LTE Band / BW | RB Size | RB Offset | QPSK Mid CH 23330 793.0 MHz | 3GPP MPR (dB) | 16QAM Mid CH 23330 793.0 MHz | 3GPP MPR (dB) | 64QAM Mid CH 23330 793.0 MHz | 3GPP MPR (dB) |
|---|---|---|---|---|---|---|---|---|
| 14 / 10M | 1 | 0 | **23.24** | 0 | 22.32 | 1 | 21.53 | 2 |
| | 1 | 24 | 23.21 | 0 | 22.28 | 1 | 21.46 | 2 |
| | 1 | 49 | 23.17 | 0 | 22.25 | 1 | 21.41 | 2 |
| | 25 | 0 | 22.37 | 0 | 21.31 | 1 | 20.39 | 3 |
| | 25 | 12 | 22.34 | 0 | 21.28 | 1 | 20.35 | 3 |
| | 25 | 25 | 22.30 | 0 | 21.24 | 1 | 20.32 | 3 |
| | 50 | 0 | 22.34 | 1 | 21.31 | 2 | 20.37 | 3 |

| LTE Band / BW | RB Size | RB Offset | QPSK Low CH 26047 1850.7 MHz | QPSK Mid CH 26365 1882.5 MHz | QPSK High CH 26683 1914.3 MHz | 3GPP MPR (dB) | 16QAM Low CH 26047 1850.7 MHz | 16QAM Mid CH 26365 1882.5 MHz | 16QAM High CH 26683 1914.3 MHz | 3GPP MPR (dB) | 64QAM Low CH 26047 1850.7 MHz | 64QAM Mid CH 26365 1882.5 MHz | 64QAM High CH 26683 1914.3 MHz | 3GPP MPR (dB) |
|---|---|---|---|---|---|---|---|---|---|---|---|---|---|---|
| 25 / 1.4M | 1 | 0 | 23.60 | 23.52 | 23.63 | 0 | 22.82 | 22.74 | 22.85 | 1 | 21.45 | 21.37 | 21.48 | 2 |
| | 1 | 2 | 23.55 | 23.47 | 23.58 | 0 | 22.78 | 22.70 | 22.81 | 1 | 21.41 | 21.33 | 21.44 | 2 |
| | 1 | 5 | 23.52 | 23.44 | 23.55 | 0 | 22.74 | 22.66 | 22.77 | 1 | 21.37 | 21.29 | 21.40 | 2 |
| | 3 | 0 | 22.66 | 22.58 | 22.69 | 0 | 21.65 | 21.57 | 21.68 | 1 | 20.43 | 20.35 | 20.46 | 3 |
| | 3 | 1 | 22.62 | 22.54 | 22.65 | 0 | 21.61 | 21.53 | 21.64 | 1 | 20.38 | 20.30 | 20.41 | 3 |
| | 3 | 3 | 22.57 | 22.49 | 22.60 | 0 | 21.57 | 21.49 | 21.60 | 1 | 20.34 | 20.26 | 20.37 | 3 |
| | 6 | 0 | 22.67 | 22.59 | 22.70 | 1 | 21.62 | 21.54 | 21.65 | 2 | 20.38 | 20.30 | 20.41 | 3 |

| LTE Band / BW | RB Size | RB Offset | QPSK Low CH 26055 1851.5 MHz | QPSK Mid CH 26365 1882.5 MHz | QPSK High CH 26675 1913.5 MHz | 3GPP MPR (dB) | 16QAM Low CH 26055 1851.5 MHz | 16QAM Mid CH 26365 1882.5 MHz | 16QAM High CH 26675 1913.5 MHz | 3GPP MPR (dB) | 64QAM Low CH 26055 1851.5 MHz | 64QAM Mid CH 26365 1882.5 MHz | 64QAM High CH 26675 1913.5 MHz | 3GPP MPR (dB) |
|---|---|---|---|---|---|---|---|---|---|---|---|---|---|---|
| 25 / 3M | 1 | 0 | 23.63 | 23.55 | 23.66 | 0 | 22.85 | 22.77 | 22.88 | 1 | 21.48 | 21.40 | 21.51 | 2 |
| | 1 | 7 | 23.58 | 23.50 | 23.61 | 0 | 22.81 | 22.73 | 22.84 | 1 | 21.44 | 21.36 | 21.47 | 2 |
| | 1 | 14 | 23.55 | 23.47 | 23.58 | 0 | 22.77 | 22.69 | 22.80 | 1 | 21.40 | 21.32 | 21.43 | 2 |
| | 8 | 0 | 22.69 | 22.61 | 22.72 | 0 | 21.68 | 21.60 | 21.71 | 1 | 20.46 | 20.38 | 20.49 | 3 |
| | 8 | 3 | 22.65 | 22.57 | 22.68 | 0 | 21.64 | 21.56 | 21.67 | 1 | 20.41 | 20.33 | 20.44 | 3 |
| | 8 | 7 | 22.60 | 22.52 | 22.63 | 0 | 21.60 | 21.52 | 21.63 | 1 | 20.37 | 20.29 | 20.40 | 3 |
| | 15 | 0 | 22.70 | 22.62 | 22.73 | 1 | 21.65 | 21.57 | 21.68 | 2 | 20.41 | 20.33 | 20.44 | 3 |

| LTE Band / BW | RB Size | RB Offset | QPSK | | | 3GPP MPR (dB) | 16QAM | | | 3GPP MPR (dB) | 64QAM | | | 3GPP MPR (dB) |
|---|---|---|---|---|---|---|---|---|---|---|---|---|---|---|
| | | | Low CH 26065 1852.5 MHz | Mid CH 26365 1882.5 MHz | High CH 26665 1912.5 MHz | | Low CH 26065 1852.5 MHz | Mid CH 26365 1882.5 MHz | High CH 26665 1912.5 MHz | | Low CH 26065 1852.5 MHz | Mid CH 26365 1882.5 MHz | High CH 26665 1912.5 MHz | |
| 25 / 5M | 1 | 0 | 23.66 | 23.58 | 23.69 | 0 | 22.88 | 22.80 | 22.91 | 1 | 21.51 | 21.43 | 21.54 | 2 |
| | 1 | 12 | 23.61 | 23.53 | 23.64 | 0 | 22.84 | 22.76 | 22.87 | 1 | 21.47 | 21.39 | 21.50 | 2 |
| | 1 | 24 | 23.58 | 23.50 | 23.61 | 0 | 22.80 | 22.72 | 22.83 | 1 | 21.43 | 21.35 | 21.46 | 2 |
| | 12 | 0 | 22.72 | 22.64 | 22.75 | 0 | 21.71 | 21.63 | 21.74 | 1 | 20.49 | 20.41 | 20.52 | 3 |
| | 12 | 6 | 22.68 | 22.60 | 22.71 | 0 | 21.67 | 21.59 | 21.70 | 1 | 20.44 | 20.36 | 20.47 | 3 |
| | 12 | 13 | 22.63 | 22.55 | 22.66 | 0 | 21.63 | 21.55 | 21.66 | 1 | 20.40 | 20.32 | 20.43 | 3 |
| | 25 | 0 | 22.73 | 22.65 | 22.76 | 1 | 21.68 | 21.60 | 21.71 | 2 | 20.44 | 20.36 | 20.47 | 3 |

| LTE Band / BW | RB Size | RB Offset | QPSK | | | 3GPP MPR (dB) | 16QAM | | | 3GPP MPR (dB) | 64QAM | | | 3GPP MPR (dB) |
|---|---|---|---|---|---|---|---|---|---|---|---|---|---|---|
| | | | Low CH 26090 1855.0 MHz | Mid CH 26365 1882.5 MHz | High CH 26640 1910.0 MHz | | Low CH 26090 1855.0 MHz | Mid CH 26365 1882.5 MHz | High CH 26640 1910.0 MHz | | Low CH 26090 1855.0 MHz | Mid CH 26365 1882.5 MHz | High CH 26640 1910.0 MHz | |
| 25 / 10M | 1 | 0 | 23.68 | 23.60 | 23.71 | 0 | 22.90 | 22.82 | 22.93 | 1 | 21.56 | 21.48 | 21.59 | 2 |
| | 1 | 24 | 23.63 | 23.55 | 23.66 | 0 | 22.86 | 22.78 | 22.89 | 1 | 21.52 | 21.44 | 21.55 | 2 |
| | 1 | 49 | 23.60 | 23.52 | 23.63 | 0 | 22.82 | 22.74 | 22.85 | 1 | 21.48 | 21.40 | 21.51 | 2 |
| | 25 | 0 | 22.74 | 22.66 | 22.77 | 0 | 21.73 | 21.65 | 21.76 | 1 | 20.54 | 20.46 | 20.57 | 3 |
| | 25 | 12 | 22.70 | 22.62 | 22.73 | 0 | 21.69 | 21.61 | 21.72 | 1 | 20.49 | 20.41 | 20.52 | 3 |
| | 25 | 25 | 22.65 | 22.57 | 22.68 | 0 | 21.65 | 21.57 | 21.68 | 1 | 20.45 | 20.37 | 20.48 | 3 |
| | 50 | 0 | 22.75 | 22.67 | 22.78 | 1 | 21.70 | 21.62 | 21.73 | 2 | 20.49 | 20.41 | 20.52 | 3 |

| LTE Band / BW | RB Size | RB Offset | QPSK | | | 3GPP MPR (dB) | 16QAM | | | 3GPP MPR (dB) | 64QAM | | | 3GPP MPR (dB) |
|---|---|---|---|---|---|---|---|---|---|---|---|---|---|---|
| | | | Low CH 26115 1857.5 MHz | Mid CH 26365 1882.5 MHz | High CH 26615 1907.5 MHz | | Low CH 26115 1857.5 MHz | Mid CH 26365 1882.5 MHz | High CH 26615 1907.5 MHz | | Low CH 26115 1857.5 MHz | Mid CH 26365 1882.5 MHz | High CH 26615 1907.5 MHz | |
| 25 / 15M | 1 | 0 | 23.70 | 23.62 | 23.73 | 0 | 22.92 | 22.84 | 22.95 | 1 | 21.61 | 21.53 | 21.64 | 2 |
| | 1 | 37 | 23.65 | 23.57 | 23.68 | 0 | 22.88 | 22.80 | 22.91 | 1 | 21.57 | 21.49 | 21.60 | 2 |
| | 1 | 74 | 23.62 | 23.54 | 23.65 | 0 | 22.84 | 22.76 | 22.87 | 1 | 21.53 | 21.45 | 21.56 | 2 |
| | 36 | 0 | 22.76 | 22.68 | 22.79 | 0 | 21.75 | 21.67 | 21.78 | 1 | 20.59 | 20.51 | 20.62 | 3 |
| | 36 | 19 | 22.72 | 22.64 | 22.75 | 0 | 21.71 | 21.63 | 21.74 | 1 | 20.54 | 20.46 | 20.57 | 3 |
| | 36 | 39 | 22.67 | 22.59 | 22.70 | 0 | 21.67 | 21.59 | 21.70 | 1 | 20.50 | 20.42 | 20.53 | 3 |
| | 75 | 0 | 22.77 | 22.69 | 22.80 | 1 | 21.72 | 21.64 | 21.75 | 2 | 20.54 | 20.46 | 20.57 | 3 |

| LTE Band / BW | RB Size | RB Offset | QPSK | | | 3GPP MPR (dB) | 16QAM | | | 3GPP MPR (dB) | 64QAM | | | 3GPP MPR (dB) |
|---|---|---|---|---|---|---|---|---|---|---|---|---|---|---|
| | | | Low CH 26140 1860.0 MHz | Mid CH 26365 1882.5 MHz | High CH 26590 1905.0 MHz | | Low CH 26140 1860.0 MHz | Mid CH 26365 1882.5 MHz | High CH 26590 1905.0 MHz | | Low CH 26140 1860.0 MHz | Mid CH 26365 1882.5 MHz | High CH 26590 1905.0 MHz | |
| 25 / 20M | 1 | 0 | 23.73 | 23.65 | **23.76** | 0 | 22.95 | 22.87 | 22.98 | 1 | 21.66 | 21.58 | 21.69 | 2 |
| | 1 | 50 | 23.68 | 23.60 | 23.71 | 0 | 22.91 | 22.83 | 22.94 | 1 | 21.62 | 21.54 | 21.65 | 2 |
| | 1 | 99 | 23.65 | 23.57 | 23.68 | 0 | 22.87 | 22.79 | 22.90 | 1 | 21.58 | 21.50 | 21.61 | 2 |
| | 50 | 0 | 22.79 | 22.71 | 22.82 | 0 | 21.78 | 21.70 | 21.81 | 1 | 20.64 | 20.56 | 20.67 | 3 |
| | 50 | 25 | 22.75 | 22.67 | 22.78 | 0 | 21.74 | 21.66 | 21.77 | 1 | 20.59 | 20.51 | 20.62 | 3 |
| | 50 | 50 | 22.70 | 22.62 | 22.73 | 0 | 21.70 | 21.62 | 21.73 | 1 | 20.55 | 20.47 | 20.58 | 3 |
| | 100 | 0 | 22.80 | 22.72 | 22.83 | 1 | 21.75 | 21.67 | 21.78 | 2 | 20.59 | 20.51 | 20.62 | 3 |

| LTE Band / BW | RB Size | RB Offset | QPSK Low CH 26697 814.7 MHz | QPSK Mid CH 26865 831.5 MHz | QPSK High CH 27033 848.3 MHz | 3GPP MPR (dB) | 16QAM Low CH 26697 814.7 MHz | 16QAM Mid CH 26865 831.5 MHz | 16QAM High CH 27033 848.3 MHz | 3GPP MPR (dB) | 64QAM Low CH 26697 814.7 MHz | 64QAM Mid CH 26865 831.5 MHz | 64QAM High CH 27033 848.3 MHz | 3GPP MPR (dB) |
|---|---|---|---|---|---|---|---|---|---|---|---|---|---|---|
| 26 / 1.4M | 1 | 0 | 23.84 | 23.86 | 23.82 | 0 | 22.80 | 22.82 | 22.78 | 1 | 21.73 | 21.75 | 21.71 | 2 |
| | 1 | 2 | 23.79 | 23.81 | 23.77 | 0 | 22.75 | 22.77 | 22.73 | 1 | 21.68 | 21.70 | 21.66 | 2 |
| | 1 | 5 | 23.75 | 23.77 | 23.73 | 0 | 22.71 | 22.73 | 22.69 | 1 | 21.58 | 21.60 | 21.56 | 2 |
| | 3 | 0 | 23.82 | 23.84 | 23.80 | 0 | 22.79 | 22.81 | 22.77 | 1 | 21.72 | 21.74 | 21.70 | 3 |
| | 3 | 1 | 23.77 | 23.79 | 23.75 | 0 | 22.74 | 22.76 | 22.72 | 1 | 21.67 | 21.69 | 21.65 | 3 |
| | 3 | 3 | 23.73 | 23.75 | 23.71 | 0 | 22.70 | 22.72 | 22.68 | 1 | 21.57 | 21.59 | 21.55 | 3 |
| | 6 | 0 | 22.78 | 22.80 | 22.76 | 1 | 21.85 | 21.87 | 21.83 | 2 | 20.92 | 20.94 | 20.90 | 3 |

| LTE Band / BW | RB Size | RB Offset | QPSK Low CH 26705 815.5 MHz | QPSK Mid CH 26865 831.5 MHz | QPSK High CH 27025 847.5 MHz | 3GPP MPR (dB) | 16QAM Low CH 26705 815.5 MHz | 16QAM Mid CH 26865 831.5 MHz | 16QAM High CH 27025 847.5 MHz | 3GPP MPR (dB) | 64QAM Low CH 26705 815.5 MHz | 64QAM Mid CH 26865 831.5 MHz | 64QAM High CH 27025 847.5 MHz | 3GPP MPR (dB) |
|---|---|---|---|---|---|---|---|---|---|---|---|---|---|---|
| 26 / 3M | 1 | 0 | 23.88 | 23.90 | 23.86 | 0 | 22.84 | 22.86 | 22.82 | 1 | 21.77 | 21.79 | 21.75 | 2 |
| | 1 | 7 | 23.83 | 23.85 | 23.81 | 0 | 22.79 | 22.81 | 22.77 | 1 | 21.72 | 21.74 | 21.70 | 2 |
| | 1 | 14 | 23.79 | 23.81 | 23.77 | 0 | 22.75 | 22.77 | 22.73 | 1 | 21.62 | 21.64 | 21.60 | 2 |
| | 8 | 0 | 22.87 | 22.89 | 22.85 | 0 | 21.86 | 21.88 | 21.84 | 1 | 21.76 | 21.78 | 21.74 | 3 |
| | 8 | 3 | 22.80 | 22.82 | 22.78 | 0 | 21.82 | 21.84 | 21.80 | 1 | 21.71 | 21.73 | 21.69 | 3 |
| | 8 | 7 | 22.74 | 22.76 | 22.72 | 0 | 21.79 | 21.81 | 21.77 | 1 | 21.61 | 21.63 | 21.59 | 3 |
| | 15 | 0 | 22.82 | 22.84 | 22.80 | 1 | 21.89 | 21.91 | 21.87 | 2 | 20.96 | 20.98 | 20.94 | 3 |

| LTE Band / BW | RB Size | RB Offset | QPSK Low CH 26715 816.5 MHz | QPSK Mid CH 26865 831.5 MHz | QPSK High CH 27015 846.5 MHz | 3GPP MPR (dB) | 16QAM Low CH 26715 816.5 MHz | 16QAM Mid CH 26865 831.5 MHz | 16QAM High CH 27015 846.5 MHz | 3GPP MPR (dB) | 64QAM Low CH 26715 816.5 MHz | 64QAM Mid CH 26865 831.5 MHz | 64QAM High CH 27015 846.5 MHz | 3GPP MPR (dB) |
|---|---|---|---|---|---|---|---|---|---|---|---|---|---|---|
| 26 / 5M | 1 | 0 | 23.91 | 23.93 | 23.89 | 0 | 22.87 | 22.89 | 22.85 | 1 | 21.81 | 21.83 | 21.79 | 2 |
| | 1 | 12 | 23.86 | 23.88 | 23.84 | 0 | 22.82 | 22.84 | 22.80 | 1 | 21.76 | 21.78 | 21.74 | 2 |
| | 1 | 24 | 23.82 | 23.84 | 23.80 | 0 | 22.78 | 22.80 | 22.76 | 1 | 21.66 | 21.68 | 21.64 | 2 |
| | 12 | 0 | 22.90 | 22.92 | 22.88 | 0 | 21.89 | 21.91 | 21.87 | 1 | 21.80 | 21.82 | 21.78 | 3 |
| | 12 | 6 | 22.83 | 22.85 | 22.81 | 0 | 21.85 | 21.87 | 21.83 | 1 | 21.75 | 21.77 | 21.73 | 3 |
| | 12 | 13 | 22.77 | 22.79 | 22.75 | 0 | 21.82 | 21.84 | 21.80 | 1 | 21.65 | 21.67 | 21.63 | 3 |
| | 25 | 0 | 22.85 | 22.87 | 22.83 | 1 | 21.92 | 21.94 | 21.90 | 2 | 21.00 | 21.02 | 20.98 | 3 |

| LTE Band / BW | RB Size | RB Offset | QPSK Low CH 26740 819.0 MHz | QPSK Mid CH 26865 831.5 MHz | QPSK High CH 26990 844.0 MHz | 3GPP MPR (dB) | 16QAM Low CH 26740 819.0 MHz | 16QAM Mid CH 26865 831.5 MHz | 16QAM High CH 26990 844.0 MHz | 3GPP MPR (dB) | 64QAM Low CH 26740 819.0 MHz | 64QAM Mid CH 26865 831.5 MHz | 64QAM High CH 26990 844.0 MHz | 3GPP MPR (dB) |
|---|---|---|---|---|---|---|---|---|---|---|---|---|---|---|
| 26 / 10M | 1 | 0 | 23.94 | **23.96** | 23.92 | 0 | 22.90 | 22.92 | 22.88 | 1 | 21.85 | 21.87 | 21.83 | 2 |
| | 1 | 24 | 23.89 | 23.91 | 23.87 | 0 | 22.85 | 22.87 | 22.83 | 1 | 21.80 | 21.82 | 21.78 | 2 |
| | 1 | 49 | 23.85 | 23.87 | 23.83 | 0 | 22.81 | 22.83 | 22.79 | 1 | 21.70 | 21.72 | 21.68 | 2 |
| | 25 | 0 | 22.93 | 22.95 | 22.91 | 0 | 21.92 | 21.94 | 21.90 | 1 | 21.84 | 21.86 | 21.82 | 3 |
| | 25 | 12 | 22.86 | 22.88 | 22.84 | 0 | 21.88 | 21.90 | 21.86 | 1 | 21.79 | 21.81 | 21.77 | 3 |
| | 25 | 25 | 22.80 | 22.82 | 22.78 | 0 | 21.85 | 21.87 | 21.83 | 1 | 21.69 | 21.71 | 21.67 | 3 |
| | 50 | 0 | 22.88 | 22.90 | 22.86 | 1 | 21.95 | 21.97 | 21.93 | 2 | 21.04 | 21.06 | 21.02 | 3 |

| LTE Band / BW | RB Size | RB Offset | QPSK | | | 3GPP MPR (dB) | 16QAM | | | 3GPP MPR (dB) | 64QAM | | | 3GPP MPR (dB) |
|---|---|---|---|---|---|---|---|---|---|---|---|---|---|---|
| | | | Low CH 26765 821.5 MHz | Mid CH 26865 831.5 MHz | High CH 26965 841.5 MHz | | Low CH 26765 821.5 MHz | Mid CH 26865 831.5 MHz | High CH 26965 841.5 MHz | | Low CH 26765 821.5 MHz | Mid CH 26865 831.5 MHz | High CH 26965 841.5 MHz | |
| 26 / 15M | 1 | 0 | 23.97 | 23.99 | 23.95 | 0 | 22.93 | 22.95 | 22.91 | 1 | 21.89 | 21.91 | 21.91 | 2 |
| | 1 | 37 | 23.92 | 23.94 | 23.90 | 0 | 22.88 | 22.90 | 22.86 | 1 | 21.84 | 21.86 | 21.81 | 2 |
| | 1 | 74 | 23.88 | 23.90 | 23.86 | 0 | 22.84 | 22.86 | 22.82 | 1 | 21.74 | 21.76 | 21.18 | 2 |
| | 36 | 0 | 22.96 | 22.98 | 22.94 | 0 | 21.95 | 21.97 | 21.93 | 1 | 21.11 | 21.13 | 21.16 | 3 |
| | 36 | 19 | 22.89 | 22.91 | 22.87 | 0 | 21.91 | 21.93 | 21.89 | 1 | 21.09 | 21.11 | 21.12 | 3 |
| | 36 | 39 | 22.83 | 22.85 | 22.81 | 0 | 21.88 | 21.90 | 21.86 | 1 | 21.05 | 21.07 | 21.15 | 3 |
| | 75 | 0 | 22.91 | 22.93 | 22.89 | 1 | 21.98 | 22.00 | 21.96 | 2 | 21.08 | 21.10 | 21.18 | 3 |

| LTE Band / BW | RB Size | RB Offset | QPSK | | | 3GPP MPR (dB) | 16QAM | | | 3GPP MPR (dB) | 64QAM | | | 3GPP MPR (dB) |
|---|---|---|---|---|---|---|---|---|---|---|---|---|---|---|
| | | | Low CH 27685 2307.5 MHz | Mid CH 27710 2310.0 MHz | High CH 27735 2312.5 MHz | | Low CH 27685 2307.5 MHz | Mid CH 27710 2310.0 MHz | High CH 27735 2312.5 MHz | | Low CH 27685 2307.5 MHz | Mid CH 27710 2310.0 MHz | High CH 27735 2312.5 MHz | |
| 30 / 5M | 1 | 0 | 23.25 | 23.17 | 23.15 | 0 | 22.52 | 22.44 | 22.42 | 1 | 21.65 | 21.57 | 21.55 | 2 |
| | 1 | 12 | 23.21 | 23.13 | 23.11 | 0 | 22.47 | 22.39 | 22.37 | 1 | 21.60 | 21.52 | 21.50 | 2 |
| | 1 | 24 | 23.17 | 23.09 | 23.07 | 0 | 22.44 | 22.36 | 22.34 | 1 | 21.57 | 21.49 | 21.47 | 2 |
| | 12 | 0 | 22.44 | 22.36 | 22.34 | 0 | 21.31 | 21.23 | 21.21 | 1 | 21.64 | 21.56 | 21.54 | 3 |
| | 12 | 6 | 22.40 | 22.32 | 22.30 | 0 | 21.27 | 21.19 | 21.17 | 1 | 21.59 | 21.51 | 21.49 | 3 |
| | 12 | 13 | 22.37 | 22.29 | 22.27 | 0 | 21.24 | 21.16 | 21.14 | 1 | 21.56 | 21.48 | 21.46 | 3 |
| | 25 | 0 | 22.34 | 22.26 | 22.24 | 1 | 21.35 | 21.27 | 21.25 | 2 | 20.68 | 20.60 | 20.58 | 3 |

| LTE Band / BW | RB Size | RB Offset | QPSK | 3GPP MPR (dB) | 16QAM | 3GPP MPR (dB) | 64QAM | 3GPP MPR (dB) |
|---|---|---|---|---|---|---|---|---|
| | | | Mid CH 27710 2310.0 MHz | | Mid CH 27710 2310.0 MHz | | Mid CH 27710 2310.0 MHz | |
| 30 / 10M | 1 | 0 | **23.67** | 0 | 22.83 | 1 | 21.61 | 2 |
| | 1 | 24 | 23.56 | 0 | 22.79 | 1 | 21.56 | 2 |
| | 1 | 49 | 23.46 | 0 | 22.76 | 1 | 21.53 | 2 |
| | 25 | 0 | 22.69 | 0 | 21.65 | 1 | 20.69 | 3 |
| | 25 | 12 | 22.65 | 0 | 21.63 | 1 | 20.65 | 3 |
| | 25 | 25 | 22.61 | 0 | 21.60 | 1 | 20.61 | 3 |
| | 50 | 0 | 22.70 | 1 | 21.65 | 2 | 20.64 | 3 |

| LTE Band / BW | RB Size | RB Offset | QPSK | | | 3GPP MPR (dB) | 16QAM | | | 3GPP MPR (dB) | 64QAM | | | 3GPP MPR (dB) |
|---|---|---|---|---|---|---|---|---|---|---|---|---|---|---|
| | | | Low CH 37775 2572.5 MHz | Mid CH 38000 2595.0 MHz | High CH 38225 2617.5 MHz | | Low CH 37775 2572.5 MHz | Mid CH 38000 2595.0 MHz | High CH 38225 2617.5 MHz | | Low CH 37775 2572.5 MHz | Mid CH 38000 2595.0 MHz | High CH 38225 2617.5 MHz | |
| 38 / 5M | 1 | 0 | 22.62 | 22.79 | 22.83 | 0 | 21.67 | 21.84 | 21.88 | 1 | 20.56 | 20.73 | 20.77 | 2 |
| | 1 | 12 | 22.55 | 22.72 | 22.76 | 0 | 21.62 | 21.79 | 21.83 | 1 | 20.51 | 20.68 | 20.72 | 2 |
| | 1 | 24 | 22.50 | 22.67 | 22.71 | 0 | 21.55 | 21.72 | 21.76 | 1 | 20.46 | 20.63 | 20.67 | 2 |
| | 12 | 0 | 21.72 | 21.89 | 21.93 | 0 | 20.77 | 20.94 | 20.98 | 1 | 19.75 | 19.92 | 19.96 | 3 |
| | 12 | 6 | 21.70 | 21.87 | 21.91 | 0 | 20.82 | 20.99 | 21.03 | 1 | 19.73 | 19.90 | 19.94 | 3 |
| | 12 | 13 | 21.67 | 21.84 | 21.88 | 0 | 20.74 | 20.91 | 20.95 | 1 | 19.69 | 19.86 | 19.90 | 3 |
| | 25 | 0 | 21.72 | 21.89 | 21.93 | 1 | 20.44 | 20.61 | 20.65 | 2 | 19.73 | 19.90 | 19.94 | 3 |

| LTE Band / BW | RB Size | RB Offset | QPSK | | | 3GPP MPR (dB) | 16QAM | | | 3GPP MPR (dB) | 64QAM | | | 3GPP MPR (dB) |
|---|---|---|---|---|---|---|---|---|---|---|---|---|---|---|
| | | | Low CH 37800 2575.0 MHz | Mid CH 38000 2595.0 MHz | High CH 38200 2615.0 MHz | | Low CH 37800 2575.0 MHz | Mid CH 38000 2595.0 MHz | High CH 38200 2615.0 MHz | | Low CH 37800 2575.0 MHz | Mid CH 38000 2595.0 MHz | High CH 38200 2615.0 MHz | |
| 38 / 10M | 1 | 0 | 22.66 | 22.83 | 22.87 | 0 | 21.71 | 21.88 | 21.92 | 1 | 20.61 | 20.78 | 20.82 | 2 |
| | 1 | 24 | 22.59 | 22.76 | 22.80 | 0 | 21.66 | 21.83 | 21.87 | 1 | 20.56 | 20.73 | 20.77 | 2 |
| | 1 | 49 | 22.54 | 22.71 | 22.75 | 0 | 21.59 | 21.76 | 21.80 | 1 | 20.51 | 20.68 | 20.72 | 2 |
| | 25 | 0 | 21.76 | 21.93 | 21.97 | 0 | 20.81 | 20.98 | 21.02 | 1 | 19.80 | 19.97 | 20.01 | 3 |
| | 25 | 12 | 21.74 | 21.91 | 21.95 | 0 | 20.86 | 21.03 | 21.07 | 1 | 19.78 | 19.95 | 19.99 | 3 |
| | 25 | 25 | 21.71 | 21.88 | 21.92 | 0 | 20.78 | 20.95 | 20.99 | 1 | 19.74 | 19.91 | 19.95 | 3 |
| | 50 | 0 | 21.76 | 21.93 | 21.97 | 1 | 20.48 | 20.65 | 20.69 | 2 | 19.78 | 19.95 | 19.99 | 3 |

| LTE Band / BW | RB Size | RB Offset | QPSK | | | 3GPP MPR (dB) | 16QAM | | | 3GPP MPR (dB) | 64QAM | | | 3GPP MPR (dB) |
|---|---|---|---|---|---|---|---|---|---|---|---|---|---|---|
| | | | Low CH 37825 2577.5 MHz | Mid CH 38000 2595.0 MHz | High CH 38175 2612.5 MHz | | Low CH 37825 2577.5 MHz | Mid CH 38000 2595.0 MHz | High CH 38175 2612.5 MHz | | Low CH 37825 2577.5 MHz | Mid CH 38000 2595.0 MHz | High CH 38175 2612.5 MHz | |
| 38 / 15M | 1 | 0 | 22.69 | 22.86 | 22.90 | 0 | 21.74 | 21.91 | 21.95 | 1 | 20.66 | 20.83 | 20.87 | 2 |
| | 1 | 37 | 22.62 | 22.79 | 22.83 | 0 | 21.69 | 21.86 | 21.90 | 1 | 20.61 | 20.78 | 20.82 | 2 |
| | 1 | 74 | 22.57 | 22.74 | 22.78 | 0 | 21.62 | 21.79 | 21.83 | 1 | 20.56 | 20.73 | 20.77 | 2 |
| | 36 | 0 | 21.79 | 21.96 | 22.00 | 0 | 20.84 | 21.01 | 21.05 | 1 | 19.85 | 20.02 | 20.06 | 3 |
| | 36 | 19 | 21.77 | 21.94 | 21.98 | 0 | 20.89 | 21.06 | 21.10 | 1 | 19.83 | 20.00 | 20.04 | 3 |
| | 36 | 39 | 21.74 | 21.91 | 21.95 | 0 | 20.81 | 20.98 | 21.02 | 1 | 19.79 | 19.96 | 20.00 | 3 |
| | 75 | 0 | 21.79 | 21.96 | 22.00 | 1 | 20.51 | 20.68 | 20.72 | 2 | 19.83 | 20.00 | 20.04 | 3 |

| LTE Band / BW | RB Size | RB Offset | QPSK | | | 3GPP MPR (dB) | 16QAM | | | 3GPP MPR (dB) | 64QAM | | | 3GPP MPR (dB) |
|---|---|---|---|---|---|---|---|---|---|---|---|---|---|---|
| | | | Low CH 37850 2580.0 MHz | Mid CH 38000 2595.0 MHz | High CH 38150 2610.0 MHz | | Low CH 37850 2580.0 MHz | Mid CH 38000 2595.0 MHz | High CH 38150 2610.0 MHz | | Low CH 37850 2580.0 MHz | Mid CH 38000 2595.0 MHz | High CH 38150 2610.0 MHz | |
| 38 / 20M | 1 | 0 | 22.76 | 22.93 | **22.97** | 0 | 21.81 | 21.98 | 22.02 | 1 | 20.71 | 20.88 | 20.92 | 2 |
| | 1 | 50 | 22.69 | 22.86 | 22.90 | 0 | 21.76 | 21.93 | 21.97 | 1 | 20.66 | 20.83 | 20.87 | 2 |
| | 1 | 99 | 22.64 | 22.81 | 22.85 | 0 | 21.69 | 21.86 | 21.90 | 1 | 20.61 | 20.78 | 20.82 | 2 |
| | 50 | 0 | 21.86 | 22.03 | 22.07 | 0 | 20.91 | 21.08 | 21.12 | 1 | 19.90 | 20.07 | 20.11 | 3 |
| | 50 | 25 | 21.84 | 22.01 | 22.05 | 0 | 20.96 | 21.13 | 21.17 | 1 | 19.88 | 20.05 | 20.09 | 3 |
| | 50 | 50 | 21.81 | 21.98 | 22.02 | 0 | 20.88 | 21.05 | 21.09 | 1 | 19.84 | 20.01 | 20.05 | 3 |
| | 100 | 0 | 21.86 | 22.03 | 22.07 | 1 | 20.58 | 20.75 | 20.79 | 2 | 19.88 | 20.05 | 20.09 | 3 |

| LTE Band / BW | RB Size | RB Offset | QPSK | | | 3GPP MPR (dB) | 16QAM | | | 3GPP MPR (dB) | 64QAM | | | 3GPP MPR (dB) |
|---|---|---|---|---|---|---|---|---|---|---|---|---|---|---|
| | | | Low CH 38725 2307.5 MHz | Mid CH 38750 2310.0 MHz | High CH 38775 2312.5 MHz | | Low CH 38725 2307.5 MHz | Mid CH 38750 2310.0 MHz | High CH 38775 2312.5 MHz | | Low CH 38725 2307.5 MHz | Mid CH 38750 2310.0 MHz | High CH 38775 2312.5 MHz | |
| 40 / 5M | 1 | 0 | 23.02 | 23.08 | 23.13 | 0 | 22.04 | 22.10 | 22.15 | 1 | 21.12 | 21.18 | 21.23 | 2 |
| | 1 | 12 | 23.00 | 23.06 | 23.11 | 0 | 22.01 | 22.07 | 22.12 | 1 | 21.06 | 21.12 | 21.17 | 2 |
| | 1 | 24 | 22.99 | 23.05 | 23.10 | 0 | 21.96 | 22.02 | 22.07 | 1 | 21.03 | 21.09 | 21.14 | 2 |
| | 12 | 0 | 22.18 | 22.24 | 22.29 | 0 | 21.22 | 21.28 | 21.33 | 1 | 20.23 | 20.29 | 20.34 | 3 |
| | 12 | 6 | 22.16 | 22.22 | 22.27 | 0 | 21.15 | 21.21 | 21.26 | 1 | 20.20 | 20.26 | 20.31 | 3 |
| | 12 | 13 | 22.14 | 22.20 | 22.25 | 0 | 21.10 | 21.16 | 21.21 | 1 | 20.12 | 20.18 | 20.23 | 3 |
| | 25 | 0 | 22.14 | 22.20 | 22.25 | 1 | 21.18 | 21.24 | 21.29 | 2 | 20.18 | 20.24 | 20.29 | 3 |

| LTE Band / BW | RB Size | RB Offset | QPSK | 3GPP MPR (dB) | 16QAM | 3GPP MPR (dB) | 64QAM | 3GPP MPR (dB) |
|---|---|---|---|---|---|---|---|---|
| | | | Mid CH 38750 2310.0 MHz | | Mid CH 38750 2310.0 MHz | | Mid CH 38750 2310.0 MHz | |
| 40 / 10M | 1 | 0 | 23.12 | 0 | 22.09 | 1 | 21.10 | 2 |
| | 1 | 24 | 23.09 | 0 | 22.06 | 1 | 21.07 | 2 |
| | 1 | 49 | 23.05 | 0 | 21.94 | 1 | 20.97 | 2 |
| | 25 | 0 | 22.25 | 0 | 21.21 | 1 | 20.30 | 3 |
| | 25 | 12 | 22.21 | 0 | 21.17 | 1 | 20.27 | 3 |
| | 25 | 25 | 22.17 | 0 | 21.16 | 1 | 20.24 | 3 |
| | 50 | 0 | 22.20 | 1 | 21.12 | 2 | 20.20 | 3 |

| LTE Band / BW | RB Size | RB Offset | QPSK | | | | | 3GPP MPR (dB) | 16QAM | | | | | 3GPP MPR (dB) |
|---|---|---|---|---|---|---|---|---|---|---|---|---|---|---|
| | | | L-CH 39675 2498.5 MHz | M-CH 40148 2545.8 MHz | M-CH 40620 2593.0 MHz | M-CH 41093 2640.3 MHz | H-CH 41565 2687.5 MHz | | L-CH 39675 2498.5 MHz | M-CH 40148 2545.8 MHz | M-CH 40620 2593.0 MHz | M-CH 41093 2640.3 MHz | H-CH 41565 2687.5 MHz | |
| 41 / 5M | 1 | 0 | 23.51 | 23.52 | 23.83 | 23.77 | 23.93 | 0 | 22.40 | 22.41 | 22.72 | 22.66 | 22.82 | 1 |
| | 1 | 12 | 23.46 | 23.47 | 23.78 | 23.72 | 23.88 | 0 | 22.39 | 22.40 | 22.71 | 22.65 | 22.81 | 1 |
| | 1 | 24 | 23.41 | 23.42 | 23.73 | 23.67 | 23.83 | 0 | 22.35 | 22.36 | 22.67 | 22.61 | 22.77 | 1 |
| | 12 | 0 | 22.78 | 22.79 | 23.10 | 23.04 | 23.20 | 1 | 21.78 | 21.79 | 22.10 | 22.04 | 22.20 | 2 |
| | 12 | 6 | 22.75 | 22.76 | 23.07 | 23.01 | 23.17 | 1 | 21.75 | 21.76 | 22.07 | 22.01 | 22.17 | 2 |
| | 12 | 13 | 22.72 | 22.73 | 23.04 | 22.98 | 23.14 | 1 | 21.70 | 21.71 | 22.02 | 21.96 | 22.12 | 2 |
| | 25 | 0 | 22.75 | 22.76 | 23.07 | 23.01 | 23.17 | 1 | 21.72 | 21.73 | 22.04 | 21.98 | 22.14 | 2 |

| LTE Band / BW | RB Size | RB Offset | 64QAM | | | | | 3GPP MPR (dB) |
|---|---|---|---|---|---|---|---|---|
| | | | L-CH 39675 2498.5 MHz | M-CH 40148 2545.8 MHz | M-CH 40620 2593.0 MHz | M-CH 41093 2640.3 MHz | H-CH 41565 2687.5 MHz | |
| 41 / 5M | 1 | 0 | 21.35 | 21.36 | 21.67 | 21.61 | 21.77 | 2 |
| | 1 | 12 | 21.32 | 21.33 | 21.64 | 21.58 | 21.74 | 2 |
| | 1 | 24 | 21.29 | 21.30 | 21.61 | 21.55 | 21.71 | 2 |
| | 12 | 0 | 20.39 | 20.40 | 20.71 | 20.65 | 20.81 | 3 |
| | 12 | 6 | 20.35 | 20.36 | 20.67 | 20.61 | 20.77 | 3 |
| | 12 | 13 | 20.29 | 20.30 | 20.61 | 20.55 | 20.71 | 3 |
| | 25 | 0 | 20.28 | 20.29 | 20.60 | 20.54 | 20.70 | 3 |

| LTE Band / BW | RB Size | RB Offset | QPSK | | | | | 3GPP MPR (dB) | 16QAM | | | | | 3GPP MPR (dB) |
|---|---|---|---|---|---|---|---|---|---|---|---|---|---|---|
| | | | L-CH 39700 2501.0 MHz | M-CH 40160 2547.0 MHz | M-CH 40620 2593.0 MHz | M-CH 41080 2639.0 MHz | H-CH 41540 2685.0 MHz | | L-CH 39700 2501.0 MHz | M-CH 40160 2547.0 MHz | M-CH 40620 2593.0 MHz | M-CH 41080 2639.0 MHz | H-CH 41540 2685.0 MHz | |
| 41 / 10M | 1 | 0 | 23.54 | 23.55 | 23.86 | 23.80 | 23.96 | 0 | 22.43 | 22.44 | 22.75 | 22.69 | 22.85 | 1 |
| | 1 | 24 | 23.49 | 23.50 | 23.81 | 23.75 | 23.91 | 0 | 22.42 | 22.43 | 22.74 | 22.68 | 22.84 | 1 |
| | 1 | 49 | 23.44 | 23.45 | 23.76 | 23.70 | 23.86 | 0 | 22.38 | 22.39 | 22.70 | 22.64 | 22.80 | 1 |
| | 25 | 0 | 22.81 | 22.82 | 23.13 | 23.07 | 23.23 | 1 | 21.81 | 21.82 | 22.13 | 22.07 | 22.23 | 2 |
| | 25 | 12 | 22.78 | 22.79 | 23.10 | 23.04 | 23.20 | 1 | 21.78 | 21.79 | 22.10 | 22.04 | 22.20 | 2 |
| | 25 | 25 | 22.75 | 22.76 | 23.07 | 23.01 | 23.17 | 1 | 21.73 | 21.74 | 22.05 | 21.99 | 22.15 | 2 |
| | 50 | 0 | 22.78 | 22.79 | 23.10 | 23.04 | 23.20 | 1 | 21.75 | 21.76 | 22.07 | 22.01 | 22.17 | 2 |

| LTE Band / BW | RB Size | RB Offset | 64QAM | | | | | 3GPP MPR (dB) |
|---|---|---|---|---|---|---|---|---|
| | | | L-CH 39700 2501.0 MHz | M-CH 40160 2547.0 MHz | M-CH 40620 2593.0 MHz | M-CH 41080 2639.0 MHz | H-CH 41540 2685.0 MHz | |
| 41 / 10M | 1 | 0 | 21.40 | 21.41 | 21.72 | 21.66 | 21.82 | 2 |
| | 1 | 24 | 21.37 | 21.38 | 21.69 | 21.63 | 21.79 | 2 |
| | 1 | 49 | 21.34 | 21.35 | 21.66 | 21.60 | 21.76 | 2 |
| | 25 | 0 | 20.44 | 20.45 | 20.76 | 20.70 | 20.86 | 3 |
| | 25 | 12 | 20.40 | 20.41 | 20.72 | 20.66 | 20.82 | 3 |
| | 25 | 25 | 20.34 | 20.35 | 20.66 | 20.60 | 20.76 | 3 |
| | 50 | 0 | 20.33 | 20.34 | 20.65 | 20.59 | 20.75 | 3 |

| LTE Band / BW | RB Size | RB Offset | QPSK | | | | | 3GPP MPR (dB) | 16QAM | | | | | 3GPP MPR (dB) |
|---|---|---|---|---|---|---|---|---|---|---|---|---|---|---|
| | | | L-CH 39725 2503.5 MHz | M-CH 40173 2548.3 MHz | M-CH 40620 2593.0 MHz | M-CH 41068 2637.8 MHz | H-CH 41515 2682.5 MHz | | L-CH 39725 2503.5 MHz | M-CH 40173 2548.3 MHz | M-CH 40620 2593.0 MHz | M-CH 41068 2637.8 MHz | H-CH 41515 2682.5 MHz | |
| 41 / 15M | 1 | 0 | 23.58 | 23.59 | 23.90 | 23.84 | 24.00 | 0 | 22.47 | 22.48 | 22.79 | 22.73 | 22.89 | 1 |
| | 1 | 37 | 23.53 | 23.54 | 23.85 | 23.79 | 23.95 | 0 | 22.46 | 22.47 | 22.78 | 22.72 | 22.88 | 1 |
| | 1 | 74 | 23.48 | 23.49 | 23.80 | 23.74 | 23.90 | 0 | 22.42 | 22.43 | 22.74 | 22.68 | 22.84 | 1 |
| | 36 | 0 | 22.85 | 22.86 | 23.17 | 23.11 | 23.27 | 1 | 21.85 | 21.86 | 22.17 | 22.11 | 22.27 | 2 |
| | 36 | 19 | 22.82 | 22.83 | 23.14 | 23.08 | 23.24 | 1 | 21.82 | 21.83 | 22.14 | 22.08 | 22.24 | 2 |
| | 36 | 39 | 22.79 | 22.80 | 23.11 | 23.05 | 23.21 | 1 | 21.77 | 21.78 | 22.09 | 22.03 | 22.19 | 2 |
| | 75 | 0 | 22.82 | 22.83 | 23.14 | 23.08 | 23.24 | 1 | 21.79 | 21.80 | 22.11 | 22.05 | 22.21 | 2 |

| LTE Band / BW | RB Size | RB Offset | 64QAM | | | | | 3GPP MPR (dB) |
|---|---|---|---|---|---|---|---|---|
| | | | L-CH 39725 2503.5 MHz | M-CH 40173 2548.3 MHz | M-CH 40620 2593.0 MHz | M-CH 41068 2637.8 MHz | H-CH 41515 2682.5 MHz | |
| 41 / 15M | 1 | 0 | 21.45 | 21.46 | 21.77 | 21.71 | 21.87 | 2 |
| | 1 | 37 | 21.42 | 21.43 | 21.74 | 21.68 | 21.84 | 2 |
| | 1 | 74 | 21.39 | 21.40 | 21.71 | 21.65 | 21.81 | 2 |
| | 36 | 0 | 20.49 | 20.50 | 20.81 | 20.75 | 20.91 | 3 |
| | 36 | 19 | 20.45 | 20.46 | 20.77 | 20.71 | 20.87 | 3 |
| | 36 | 39 | 20.39 | 20.40 | 20.71 | 20.65 | 20.81 | 3 |
| | 75 | 0 | 20.38 | 20.39 | 20.70 | 20.64 | 20.80 | 3 |

| LTE Band / BW | RB Size | RB Offset | QPSK | | | | | 3GPP MPR (dB) | 16QAM | | | | | 3GPP MPR (dB) |
|---|---|---|---|---|---|---|---|---|---|---|---|---|---|---|
| | | | L-CH 39750 2506.0 MHz | M-CH 40185 2549.5 MHz | M-CH 40620 2593.0 MHz | M-CH 41055 2636.5 MHz | H-CH 41490 2680.0 MHz | | L-CH 39750 2506.0 MHz | M-CH 40185 2549.5 MHz | M-CH 40620 2593.0 MHz | M-CH 41055 2636.5 MHz | H-CH 41490 2680.0 MHz | |
| 41 / 20M | 1 | 0 | 23.64 | 23.65 | 23.96 | 23.90 | **24.06** | 0 | 22.53 | 22.54 | 22.85 | 22.79 | 22.95 | 1 |
| | 1 | 50 | 23.59 | 23.60 | 23.91 | 23.85 | 24.01 | 0 | 22.52 | 22.53 | 22.84 | 22.78 | 22.94 | 1 |
| | 1 | 99 | 23.54 | 23.55 | 23.86 | 23.80 | 23.96 | 0 | 22.48 | 22.49 | 22.80 | 22.74 | 22.90 | 1 |
| | 50 | 0 | 22.91 | 22.92 | 23.23 | 23.17 | 23.33 | 1 | 21.91 | 21.92 | 22.23 | 22.17 | 22.33 | 2 |
| | 50 | 25 | 22.88 | 22.89 | 23.20 | 23.14 | 23.30 | 1 | 21.88 | 21.89 | 22.20 | 22.14 | 22.30 | 2 |
| | 50 | 50 | 22.85 | 22.86 | 23.17 | 23.11 | 23.27 | 1 | 21.83 | 21.84 | 22.15 | 22.09 | 22.25 | 2 |
| | 100 | 0 | 22.88 | 22.89 | 23.20 | 23.14 | 23.30 | 1 | 21.85 | 21.86 | 22.17 | 22.11 | 22.27 | 2 |

| LTE Band / BW | RB Size | RB Offset | 64QAM | | | | | 3GPP MPR (dB) |
|---|---|---|---|---|---|---|---|---|
| | | | L-CH 39750 2506.0 MHz | M-CH 40185 2549.5 MHz | M-CH 40620 2593.0 MHz | M-CH 41055 2636.5 MHz | H-CH 41490 2680.0 MHz | |
| 41 / 20M | 1 | 0 | 21.50 | 21.51 | 21.82 | 21.76 | 21.92 | 2 |
| | 1 | 50 | 21.47 | 21.48 | 21.79 | 21.73 | 21.89 | 2 |
| | 1 | 99 | 21.44 | 21.45 | 21.76 | 21.70 | 21.86 | 2 |
| | 50 | 0 | 20.54 | 20.55 | 20.86 | 20.80 | 20.96 | 3 |
| | 50 | 25 | 20.50 | 20.51 | 20.82 | 20.76 | 20.92 | 3 |
| | 50 | 50 | 20.44 | 20.45 | 20.76 | 20.70 | 20.86 | 3 |
| | 100 | 0 | 20.43 | 20.44 | 20.75 | 20.69 | 20.85 | 3 |

| LTE Band / BW | RB Size | RB Offset | QPSK | | | 3GPP MPR (dB) | 16QAM | | | 3GPP MPR (dB) | 64QAM | | | 3GPP MPR (dB) |
|---|---|---|---|---|---|---|---|---|---|---|---|---|---|---|
| | | | Low CH 131979 1710.7 MHz | Mid CH 132322 1745.0 MHz | High CH 132665 1779.3 MHz | | Low CH 131979 1710.7 MHz | Mid CH 132322 1745.0 MHz | High CH 132665 1779.3 MHz | | Low CH 131979 1710.7 MHz | Mid CH 132322 1745.0 MHz | High CH 132665 1779.3 MHz | |
| 66 / 1.4M | 1 | 0 | 23.38 | 23.42 | 23.45 | 0 | 22.34 | 22.38 | 22.44 | 1 | 21.21 | 21.25 | 21.34 | 2 |
| | 1 | 2 | 23.39 | 23.43 | 23.37 | 0 | 22.31 | 22.35 | 22.41 | 1 | 21.16 | 21.20 | 21.29 | 2 |
| | 1 | 5 | 23.24 | 23.28 | 23.22 | 0 | 22.26 | 22.30 | 22.36 | 1 | 21.14 | 21.18 | 21.27 | 2 |
| | 3 | 0 | 23.37 | 23.41 | 23.44 | 0 | 22.32 | 22.36 | 22.42 | 1 | 20.31 | 20.35 | 20.44 | 3 |
| | 3 | 1 | 23.38 | 23.42 | 23.36 | 0 | 22.29 | 22.33 | 22.39 | 1 | 20.27 | 20.31 | 20.40 | 3 |
| | 3 | 3 | 23.23 | 23.27 | 23.21 | 0 | 22.24 | 22.28 | 22.34 | 1 | 20.23 | 20.27 | 20.36 | 3 |
| | 6 | 0 | 22.46 | 22.50 | 22.58 | 1 | 21.17 | 21.21 | 21.30 | 2 | 20.30 | 20.34 | 20.43 | 3 |

| LTE Band / BW | RB Size | RB Offset | QPSK | | | 3GPP MPR (dB) | 16QAM | | | 3GPP MPR (dB) | 64QAM | | | 3GPP MPR (dB) |
|---|---|---|---|---|---|---|---|---|---|---|---|---|---|---|
| | | | Low CH 131987 1711.5 MHz | Mid CH 132322 1745.0 MHz | High CH 132657 1778.5 MHz | | Low CH 131987 1711.5 MHz | Mid CH 132322 1745.0 MHz | High CH 132657 1778.5 MHz | | Low CH 131987 1711.5 MHz | Mid CH 132322 1745.0 MHz | High CH 132657 1778.5 MHz | |
| 66 / 3M | 1 | 0 | 23.41 | 23.45 | 23.48 | 0 | 22.37 | 22.41 | 22.47 | 1 | 21.26 | 21.30 | 21.39 | 2 |
| | 1 | 7 | 23.42 | 23.46 | 23.40 | 0 | 22.34 | 22.38 | 22.44 | 1 | 21.21 | 21.25 | 21.34 | 2 |
| | 1 | 14 | 23.27 | 23.31 | 23.25 | 0 | 22.29 | 22.33 | 22.39 | 1 | 21.19 | 21.23 | 21.32 | 2 |
| | 8 | 0 | 22.55 | 22.59 | 22.66 | 0 | 21.25 | 21.29 | 21.35 | 1 | 20.36 | 20.40 | 20.49 | 3 |
| | 8 | 3 | 22.51 | 22.55 | 22.62 | 0 | 21.22 | 21.26 | 21.35 | 1 | 20.32 | 20.36 | 20.45 | 3 |
| | 8 | 7 | 22.48 | 22.52 | 22.60 | 0 | 21.18 | 21.22 | 21.31 | 1 | 20.28 | 20.32 | 20.41 | 3 |
| | 15 | 0 | 22.49 | 22.53 | 22.61 | 1 | 21.20 | 21.24 | 21.33 | 2 | 20.35 | 20.39 | 20.48 | 3 |

| LTE Band / BW | RB Size | RB Offset | QPSK | | | 3GPP MPR (dB) | 16QAM | | | 3GPP MPR (dB) | 64QAM | | | 3GPP MPR (dB) |
|---|---|---|---|---|---|---|---|---|---|---|---|---|---|---|
| | | | Low CH 131997 1712.5 MHz | Mid CH 132322 1745.0 MHz | High CH 132647 1777.5 MHz | | Low CH 131997 1712.5 MHz | Mid CH 132322 1745.0 MHz | High CH 132647 1777.5 MHz | | Low CH 131997 1712.5 MHz | Mid CH 132322 1745.0 MHz | High CH 132647 1777.5 MHz | |
| 66 / 5M | 1 | 0 | 23.44 | 23.48 | 23.51 | 0 | 22.40 | 22.44 | 22.50 | 1 | 21.31 | 21.35 | 21.44 | 2 |
| | 1 | 12 | 23.45 | 23.49 | 23.43 | 0 | 22.37 | 22.41 | 22.47 | 1 | 21.26 | 21.30 | 21.39 | 2 |
| | 1 | 24 | 23.30 | 23.34 | 23.28 | 0 | 22.32 | 22.36 | 22.42 | 1 | 21.24 | 21.28 | 21.37 | 2 |
| | 12 | 0 | 22.58 | 22.62 | 22.69 | 0 | 21.28 | 21.32 | 21.38 | 1 | 20.41 | 20.45 | 20.54 | 3 |
| | 12 | 6 | 22.54 | 22.58 | 22.65 | 0 | 21.25 | 21.29 | 21.38 | 1 | 20.37 | 20.41 | 20.50 | 3 |
| | 12 | 13 | 22.51 | 22.55 | 22.63 | 0 | 21.21 | 21.25 | 21.34 | 1 | 20.33 | 20.37 | 20.46 | 3 |
| | 25 | 0 | 22.52 | 22.56 | 22.64 | 1 | 21.23 | 21.27 | 21.36 | 2 | 20.40 | 20.44 | 20.53 | 3 |

| LTE Band / BW | RB Size | RB Offset | QPSK | | | 3GPP MPR (dB) | 16QAM | | | 3GPP MPR (dB) | 64QAM | | | 3GPP MPR (dB) |
|---|---|---|---|---|---|---|---|---|---|---|---|---|---|---|
| | | | Low CH 132022 1715.0 MHz | Mid CH 132322 1745.0 MHz | High CH 132622 1775.0 MHz | | Low CH 132022 1715.0 MHz | Mid CH 132322 1745.0 MHz | High CH 132622 1775.0 MHz | | Low CH 132022 1715.0 MHz | Mid CH 132322 1745.0 MHz | High CH 132622 1775.0 MHz | |
| 66 / 10M | 1 | 0 | 23.46 | 23.50 | 23.53 | 0 | 22.42 | 22.46 | 22.52 | 1 | 21.36 | 21.40 | 21.49 | 2 |
| | 1 | 24 | 23.47 | 23.51 | 23.45 | 0 | 22.39 | 22.43 | 22.49 | 1 | 21.31 | 21.35 | 21.44 | 2 |
| | 1 | 49 | 23.32 | 23.36 | 23.30 | 0 | 22.34 | 22.38 | 22.44 | 1 | 21.29 | 21.33 | 21.42 | 2 |
| | 25 | 0 | 22.60 | 22.64 | 22.71 | 0 | 21.30 | 21.34 | 21.40 | 1 | 20.46 | 20.50 | 20.59 | 3 |
| | 25 | 12 | 22.56 | 22.60 | 22.67 | 0 | 21.27 | 21.31 | 21.40 | 1 | 20.42 | 20.46 | 20.55 | 3 |
| | 25 | 25 | 22.53 | 22.57 | 22.65 | 0 | 21.23 | 21.27 | 21.36 | 1 | 20.38 | 20.42 | 20.51 | 3 |
| | 50 | 0 | 22.54 | 22.58 | 22.66 | 1 | 21.25 | 21.29 | 21.38 | 2 | 20.45 | 20.49 | 20.58 | 3 |

| LTE Band / BW | RB Size | RB Offset | QPSK | | | 3GPP MPR (dB) | 16QAM | | | 3GPP MPR (dB) | 64QAM | | | 3GPP MPR (dB) |
|---|---|---|---|---|---|---|---|---|---|---|---|---|---|---|
| | | | Low CH 132047 1717.5 MHz | Mid CH 132322 1745.0 MHz | High CH 132597 1772.5 MHz | | Low CH 132047 1717.5 MHz | Mid CH 132322 1745.0 MHz | High CH 132597 1772.5 MHz | | Low CH 132047 1717.5 MHz | Mid CH 132322 1745.0 MHz | High CH 132597 1772.5 MHz | |
| 66 / 15M | 1 | 0 | 23.49 | 23.53 | 23.56 | 0 | 22.45 | 22.49 | 22.55 | 1 | 21.41 | 21.45 | 21.54 | 2 |
| | 1 | 37 | 23.50 | 23.54 | 23.48 | 0 | 22.42 | 22.46 | 22.52 | 1 | 21.36 | 21.40 | 21.49 | 2 |
| | 1 | 74 | 23.35 | 23.39 | 23.33 | 0 | 22.37 | 22.41 | 22.47 | 1 | 21.34 | 21.38 | 21.47 | 2 |
| | 36 | 0 | 22.63 | 22.67 | 22.74 | 0 | 21.33 | 21.37 | 21.43 | 1 | 20.51 | 20.55 | 20.64 | 3 |
| | 36 | 19 | 22.59 | 22.63 | 22.70 | 0 | 21.30 | 21.34 | 21.43 | 1 | 20.47 | 20.51 | 20.60 | 3 |
| | 36 | 39 | 22.56 | 22.60 | 22.68 | 0 | 21.26 | 21.30 | 21.39 | 1 | 20.43 | 20.47 | 20.56 | 3 |
| | 75 | 0 | 22.57 | 22.61 | 22.69 | 1 | 21.28 | 21.32 | 21.41 | 2 | 20.50 | 20.54 | 20.63 | 3 |

| LTE Band / BW | RB Size | RB Offset | QPSK | | | 3GPP MPR (dB) | 16QAM | | | 3GPP MPR (dB) | 64QAM | | | 3GPP MPR (dB) |
|---|---|---|---|---|---|---|---|---|---|---|---|---|---|---|
| | | | Low CH 132072 1720.0 MHz | Mid CH 132322 1745.0 MHz | High CH 132572 1770.0 MHz | | Low CH 132072 1720.0 MHz | Mid CH 132322 1745.0 MHz | High CH 132572 1770.0 MHz | | Low CH 132072 1720.0 MHz | Mid CH 132322 1745.0 MHz | High CH 132572 1770.0 MHz | |
| 66 / 20M | 1 | 0 | 23.54 | 23.58 | **23.61** | 0 | 22.50 | 22.54 | 22.60 | 1 | 21.46 | 21.50 | 21.59 | 2 |
| | 1 | 50 | 23.55 | 23.59 | 23.53 | 0 | 22.47 | 22.51 | 22.57 | 1 | 21.41 | 21.45 | 21.54 | 2 |
| | 1 | 99 | 23.40 | 23.44 | 23.38 | 0 | 22.42 | 22.46 | 22.52 | 1 | 21.39 | 21.43 | 21.52 | 2 |
| | 50 | 0 | 22.68 | 22.72 | 22.79 | 0 | 21.38 | 21.42 | 21.48 | 1 | 20.56 | 20.60 | 20.69 | 3 |
| | 50 | 25 | 22.64 | 22.68 | 22.75 | 0 | 21.35 | 21.39 | 21.48 | 1 | 20.52 | 20.56 | 20.65 | 3 |
| | 50 | 50 | 22.61 | 22.65 | 22.73 | 0 | 21.31 | 21.35 | 21.44 | 1 | 20.48 | 20.52 | 20.61 | 3 |
| | 100 | 0 | 22.62 | 22.66 | 22.74 | 1 | 21.33 | 21.37 | 21.46 | 2 | 20.55 | 20.59 | 20.68 | 3 |

**<WLAN 2.4G>**

| Mode | 802.11b | | |
|---|---|---|---|
| Channel / Frequency (MHz) | 1 (2412) | 6 (2437) | 11 (2462) |
| Average Power | **17.76** | 17.51 | 17.58 |
| Mode | 802.11g | | |
| Channel / Frequency (MHz) | 1 (2412) | 6 (2437) | 11 (2462) |
| Average Power | **16.49** | 16.15 | 16.43 |
| Mode | 802.11n (HT20) | | |
| Channel / Frequency (MHz) | 1 (2412) | 6 (2437) | 11 (2462) |
| Average Power | 16.15 | 15.96 | **16.35** |
| Mode | 802.11n (HT40) | | |
| Channel / Frequency (MHz) | 3 (2422) | 6 (2437) | 9 (2452) |
| Average Power | 12.84 | 12.81 | **13.24** |

**<WLAN 5.2G>**

| Mode | 802.11a | | |
|---|---|---|---|
| Channel / Frequency (MHz) | 36 (5180) | 40 (5200) | 48 (5240) |
| Average Power | 16.25 | 16.39 | **16.57** |
| Mode | 802.11n (HT20) | | |
| Channel / Frequency (MHz) | 36 (5180) | 40 (5200) | 48 (5240) |
| Average Power | **16.69** | 16.42 | 16.63 |
| Mode | 802.11n (HT40) | | |
| Channel / Frequency (MHz) | 38 (5190) | 46 (5230) | |
| Average Power | 12.51 | **12.87** | |
| Mode | 802.11ac (VHT80) | | |
| Channel / Frequency (MHz) | 42 (5210) | | |
| Average Power | **10.59** | | |

**<WLAN 5.3G>**

| Mode | 802.11a | | |
|---|---|---|---|
| Channel / Frequency (MHz) | 52 (5260) | 60 (5300) | 64 (5320) |
| Average Power | 16.82 | 17.13 | **17.34** |
| Mode | 802.11n (HT20) | | |
| Channel / Frequency (MHz) | 52 (5260) | 60 (5300) | 64 (5320) |
| Average Power | 17.43 | **17.75** | 17.65 |
| Mode | 802.11n (HT40) | | |
| Channel / Frequency (MHz) | 54 (5270) | 62 (5310) | |
| Average Power | 13.11 | **13.15** | |
| Mode | 802.11ac (VHT80) | | |
| Channel / Frequency (MHz) | 58 (5290) | | |
| Average Power | **10.73** | | |

**<WLAN 5.6G>**

| Mode | 802.11a | | |
|---|---|---|---|
| Channel / Frequency (MHz) | 100 (5500) | 116 (5580) | 140 (5700) |
| Average Power | 16.18 | **16.59** | 16.52 |
| Mode | 802.11n (HT20) | | |
| Channel / Frequency (MHz) | 100 (5500) | 116 (5580) | 140 (5700) |
| Average Power | 15.92 | **16.37** | 16.25 |
| Mode | 802.11n (HT40) | | |
| Channel / Frequency (MHz) | 102 (5510) | 134 (5670) | |
| Average Power | 16.29 | **16.49** | |
| Mode | 802.11ac (VHT80) | | |
| Channel / Frequency (MHz) | 106 (5530) | | |
| Average Power | **13.26** | | |

**<WLAN 5.8G>**

| Mode | 802.11a | | |
|---|---|---|---|
| Channel / Frequency (MHz) | 149 (5745) | 157 (5785) | 165 (5825) |
| Average Power | 16.67 | 16.52 | **16.75** |
| Mode | 802.11n (HT20) | | |
| Channel / Frequency (MHz) | 149 (5745) | 157 (5785) | 165 (5825) |
| Average Power | 16.58 | **16.67** | 16.45 |
| Mode | 802.11n (HT40) | | |
| Channel / Frequency (MHz) | 151 (5755) | 159 (5795) | |
| Average Power | **17.26** | 17.20 | |
| Mode | 802.11ac (VHT80) | | |
| Channel / Frequency (MHz) | 155 (5775) | | |
| Average Power | **15.34** | | |

**<Bluetooth>**

| Mode | Bluetooth GFSK | | |
|---|---|---|---|
| Channel / Frequency (MHz) | 0 (2402) | 39 (2441) | 78 (2480) |
| Average Power | 8.91 | **9.34** | 8.82 |
| Mode | Bluetooth π/4-DQPSK | | |
| Channel / Frequency (MHz) | 0 (2402) | 39 (2441) | 78 (2480) |
| Average Power | 5.85 | **6.02** | 5.84 |
| Mode | Bluetooth 8DPSK | | |
| Channel / Frequency (MHz) | 0 (2402) | 39 (2441) | 78 (2480) |
| Average Power | 5.94 | **6.08** | 5.74 |
| Mode | Bluetooth LE | | |
| Channel / Frequency (MHz) | 0 (2402) | 19 (2440) | 39 (2480) |
| Average Power | -2.02 | -1.32 | **-0.87** |

## 4.7 SAR Testing Results

### 4.7.1 SAR Test Reduction Considerations

**<KDB 447498 D01, General RF Exposure Guidance>**

Testing of other required channels within the operating mode of a frequency band is not required when the reported SAR for the mid-band or highest output power channel is:

(1) ≤ 0.8 W/kg or 2.0 W/kg, for 1-g or 10-g respectively, when the transmission band is ≤ 100 MHz

(2) ≤ 0.6 W/kg or 1.5 W/kg, for 1-g or 10-g respectively, when the transmission band is between 100 MHz and 200 MHz

(3) ≤ 0.4 W/kg or 1.0 W/kg, for 1-g or 10-g respectively, when the transmission band is ≥ 200 MHz

**<KDB 941225 D01, 3G SAR Measurement Procedures>**

The mode tested for SAR is referred to as the primary mode. The equivalent modes considered for SAR test reduction are denoted as secondary modes. Both primary and secondary modes must be in the same frequency band. When the maximum output power and tune-up tolerance specified for production units in a secondary mode is ≤ 1/4 dB higher than the primary mode or when the highest reported SAR of the primary mode is scaled by the ratio of specified maximum output power and tune-up tolerance of secondary to primary mode and the adjusted SAR is ≤ 1.2 W/kg, SAR measurement is not required for the secondary mode.

**<KDB 941225 D05, SAR Evaluation Considerations for LTE Devices>**

(1) QPSK with 1 RB and 50% RB allocation

Start with the largest channel bandwidth and measure SAR, using the RB offset and required test channel combination with the highest maximum output power among RB offsets at the upper edge, middle and lower edge of each required test channel. When the reported SAR is ≤ 0.8 W/kg, testing of the remaining RB offset configurations and required test channels is not required; otherwise, SAR is required for the remaining required test channels and only for the RB offset configuration with the highest output power for that channel. When the reported SAR of a required test channel is > 1.45 W/kg, SAR is required for all three RB offset configurations for that required test channel.

(2) QPSK with 100% RB allocation

SAR is not required when the highest maximum output power for 100% RB allocation is less than the highest maximum output power in 50% and 1 RB allocations and the highest reported SAR for 1 RB and 50% RB allocation are ≤ 0.8 W/kg. Otherwise, SAR is measured for the highest output power channel; and if the reported SAR is > 1.45 W/kg, the remaining required test channels must also be tested.

(3) Higher order modulations

SAR is required only when the highest maximum output power for the configuration in the higher order modulation is > 1/2 dB higher than the same configuration in QPSK or when the reported SAR for the QPSK configuration is > 1.45 W/kg.

(4) Other channel bandwidth

SAR is required when the highest maximum output power of the smaller channel bandwidth is > 1/2 dB higher than the equivalent channel configurations in the largest channel bandwidth configuration or the reported SAR of a configuration for the largest channel bandwidth is > 1.45 W/kg.

**<KDB 248227 D01, SAR Guidance for Wi-Fi Transmitters>**

(1) For handsets operating next to ear, hotspot mode or mini-tablet configurations, the initial test position procedures were applied. The test position with the highest extrapolated peak SAR will be used as the initial test position. When the reported SAR of initial test position is <= 0.4 W/kg, SAR testing for remaining test positions is not required. Otherwise, SAR is evaluated at the subsequent highest peak SAR positions until the reported SAR result is <= 0.8 W/kg or all test positions are measured.

(2) For WLAN 2.4 GHz, the highest measured maximum output power channel for DSSS was selected for SAR measurement. When the reported SAR is <= 0.8 W/kg, no further SAR testing is required. Otherwise, SAR is evaluated at the next highest measured output power channel. When any reported SAR is > 1.2 W/kg, SAR is required for the third channel. For OFDM modes (802.11g/n), SAR is not required when the highest reported SAR for DSSS is adjusted by the ratio of OFDM to DSSS specified maximum output power and it is <= 1.2 W/kg.

(3) For WLAN 5 GHz, the initial test configuration was selected according to the transmission mode with the highest maximum output power. When the reported SAR of initial test configuration is > 0.8 W/kg, SAR is required for the subsequent highest measured output power channel until the reported SAR result is <= 1.2 W/kg or all required channels are measured. For other transmission modes, SAR is not required when the highest reported SAR for initial test configuration is adjusted by the ratio of subsequent test configuration to initial test configuration specified maximum output power and it is <= 1.2 W/kg.

### 4.7.2 SAR Results for Head Exposure Condition

| Plot No. | Band | Mode | Test Position | Ch. | Max. Tune-up Power (dBm) | Measured Conducted Power (dBm) | Power Drift (dB) | Measured SAR-1g (W/kg) | Scaling Factor | Scaled SAR-1g (W/kg) |
|---|---|---|---|---|---|---|---|---|---|---|
| 1 | GSM850 | GPRS12 | Left Cheek | 128 | 30.0 | 29.92 | 0.07 | 0.303 | 1.02 | **0.31** |
| 2 | GSM1900 | GPRS12 | Right Cheek | 512 | 27.8 | 26.79 | 0.00 | 0.309 | 1.26 | **0.39** |
| 3 | WCDMA II | RMC12.2K | Right Cheek | 9262 | 24.5 | 24.31 | 0.02 | 0.771 | 1.04 | **0.81** |
| 4 | WCDMA IV | RMC12.2K | Right Cheek | 1513 | 24.5 | 24.19 | 0.01 | 0.626 | 1.07 | **0.67** |
| 5 | WCDMA V | RMC12.2K | Left Cheek | 4182 | 25.0 | 24.45 | 0.17 | 0.298 | 1.14 | **0.34** |

| Plot No. | Band | Mode | Test Position | Ch. | RB# | RB Offset | Max. Tune-up Power (dBm) | Measured Conducted Power (dBm) | Power Drift (dB) | Measured SAR-1g (W/kg) | Scaling Factor | Scaled SAR-1g (W/kg) |
|---|---|---|---|---|---|---|---|---|---|---|---|---|
| 6 | LTE 2 | QPSK20M | Right Cheek | 18700 | 1 | 0 | 24.2 | 23.64 | 0.05 | 0.561 | 1.09 | **0.64** |
| 7 | LTE 4 | QPSK20M | Right Cheek | 20050 | 1 | 0 | 24.2 | 23.64 | 0.04 | 0.475 | 1.09 | **0.54** |
| 8 | LTE 5 | QPSK10M | Left Cheek | 20525 | 1 | 0 | 24.0 | 22.94 | 0.14 | 0.208 | 1.14 | **0.27** |
| 9 | LTE 7 | QPSK20M | Left Cheek | 21350 | 1 | 0 | 24.0 | 22.64 | 0.09 | 0.365 | 1.09 | **0.50** |
| 10 | LTE 12 | QPSK10M | Left Cheek | 23130 | 1 | 0 | 24.0 | 23.58 | 0.02 | 0.173 | 1.10 | **0.19** |
| 11 | LTE 13 | QPSK10M | Left Cheek | 23230 | 1 | 0 | 24.0 | 23.19 | -0.10 | 0.181 | 1.07 | **0.22** |
| 12 | LTE 14 | QPSK10M | Left Cheek | 23330 | 1 | 0 | 24.0 | 23.24 | 0.00 | 0.169 | 1.06 | **0.20** |
| 13 | LTE 25 | QPSK20M | Right Cheek | 26365 | 1 | 0 | 24.2 | 23.65 | 0.07 | 0.533 | 1.08 | **0.60** |
| 14 | LTE 26 | QPSK15M | Left Cheek | 26865 | 1 | 0 | 24.5 | 23.99 | 0.07 | 0.23 | 1.12 | **0.26** |
| 15 | LTE 30 | QPSK10M | Left Cheek | 27710 | 1 | 0 | 24.0 | 23.67 | 0.15 | 0.352 | 1.08 | **0.38** |
| 16 | LTE 38 | QPSK20M | Left Cheek | 38150 | 1 | 0 | 24.0 | 22.97 | 0.05 | 0.217 | 1.13 | **0.28** |
| 17 | LTE 40 | QPSK10M | Left Cheek | 38750 | 1 | 0 | 23.5 | 23.12 | 0.05 | 0.21 | 1.09 | **0.23** |
| 18 | LTE 41 | QPSK20M | Left Cheek | 41490 | 1 | 0 | 24.5 | 24.06 | 0.06 | 0.181 | 1.11 | **0.20** |
| 19 | LTE 66 | QPSK20M | Right Cheek | 132572 | 1 | 0 | 24.2 | 23.61 | 0.01 | 0.523 | 1.15 | **0.60** |

| Plot No. | Band | Mode | Test Position | Ch. | Max. Tune-up Power (dBm) | Measured Conducted Power (dBm) | Power Drift (dB) | Measured SAR-1g (W/kg) | Scaling Factor | Scaled SAR-1g (W/kg) |
|---|---|---|---|---|---|---|---|---|---|---|
| 20 | 802.11b | - | Right Cheek | 1 | 18.0 | 17.76 | 0.11 | 0.463 | 1.06 | **0.49** |
| 22 | 802.11n | HT20 | Right Cheek | 60 | 17.5 | 17.13 | 0.17 | 0.98 | 1.09 | **1.07** |
| | 802.11n | HT20 | Right Cheek | 64 | 17.5 | 17.34 | 0.02 | 0.913 | 1.04 | 0.95 |
| | 802.11n | HT20 | Right Cheek | 60 | 17.5 | 17.13 | 0.07 | 0.975 | 1.09 | 1.06 |
| 23 | 802.11n | HT40 | Right Cheek | 134 | 17.0 | 16.29 | 0.02 | 0.939 | 1.18 | **1.11** |
| | 802.11n | HT40 | Right Cheek | 102 | 17.0 | 16.49 | -0.14 | 0.899 | 1.12 | 1.01 |
| | 802.11n | HT40 | Right Cheek | 102 | 17.0 | 16.49 | -0.04 | 0.888 | 1.12 | 1.00 |
| 24 | 802.11n | HT40 | Right Cheek | 151 | 17.5 | 17.26 | 0.06 | 1.03 | 1.06 | **1.09** |
| | 802.11n | HT40 | Right Cheek | 159 | 17.5 | 17.20 | 0.07 | 1.02 | 1.07 | 1.09 |
| | 802.11n | HT40 | Right Cheek | 151 | 17.5 | 17.26 | 0.02 | 0.989 | 1.06 | 1.05 |
| 25 | BT | GFSK | Right Cheek | 39 | 9.5 | 9.34 | 0.01 | 0.219 | 1.04 | **0.23** |

### 4.7.3 SAR Results for Body-worn Exposure Condition (Separation Distance is 1.0 cm Gap)

| Plot No. | Band | Mode | Test Position | Ch. | Earphone | Max. Tune-up Power (dBm) | Measured Conducted Power (dBm) | Power Drift (dB) | Measured SAR-1g (W/kg) | Scaling Factor | Scaled SAR-1g (W/kg) |
|---|---|---|---|---|---|---|---|---|---|---|---|
| 30 | GSM850 | GPRS12 | Rear Face | 128 | - | 30.0 | 29.92 | -0.09 | 0.553 | 1.02 | **0.56** |
| 31 | GSM1900 | GPRS12 | Rear Face | 512 | - | 27.8 | 26.79 | 0.15 | 0.549 | 1.26 | **0.69** |
| 32 | WCDMA II | RMC12.2K | Rear Face | 9262 | - | 24.5 | 24.31 | 0.02 | 1.41 | 1.04 | **1.47** |
| | WCDMA II | RMC12.2K | Rear Face | 9400 | - | 24.5 | 24.29 | 0.02 | 1.28 | 1.05 | 1.34 |
| | WCDMA II | RMC12.2K | Rear Face | 9538 | - | 24.5 | 24.45 | 0.10 | 1.38 | 1.01 | 1.40 |
| | WCDMA II | RMC12.2K | Rear Face | 9262 | V | 24.5 | 24.31 | 0.00 | 1.39 | 1.04 | 1.45 |
| | WCDMA II | RMC12.2K | Rear Face | 9400 | V | 24.5 | 24.29 | -0.02 | 1.31 | 1.05 | 1.37 |
| | WCDMA II | RMC12.2K | Rear Face | 9538 | V | 24.5 | 24.45 | 0.01 | 1.28 | 1.01 | 1.29 |
| | WCDMA II | RMC12.2K | Rear Face | 9262 | - | 24.5 | 24.31 | 0.01 | 1.38 | 1.04 | 1.44 |
| 33 | WCDMA IV | RMC12.2K | Rear Face | 1513 | - | 24.5 | 24.19 | 0.02 | 1.18 | 1.07 | **1.27** |
| | WCDMA IV | RMC12.2K | Rear Face | 1312 | - | 24.5 | 24.13 | 0.03 | 1.05 | 1.09 | 1.14 |
| | WCDMA IV | RMC12.2K | Rear Face | 1413 | - | 24.5 | 24.08 | 0.01 | 1.01 | 1.10 | 1.11 |
| | WCDMA IV | RMC12.2K | Rear Face | 1513 | V | 24.5 | 24.19 | 0.01 | 1.12 | 1.07 | 1.20 |
| | WCDMA IV | RMC12.2K | Rear Face | 1513 | - | 24.5 | 24.19 | 0.02 | 1.11 | 1.07 | 1.19 |
| 34 | WCDMA V | RMC12.2K | Rear Face | 4132 | - | 25.0 | 24.54 | 0.00 | 0.508 | 1.11 | **0.56** |

| Plot No. | Band | Mode | Test Position | Ch. | RB# | RB Offset | Max. Tune-up Power (dBm) | Measured Conducted Power (dBm) | Power Drift (dB) | Measured SAR-1g (W/kg) | Scaling Factor | Scaled SAR-1g (W/kg) |
|---|---|---|---|---|---|---|---|---|---|---|---|---|
| | LTE 2 | QPSK20M | Rear Face | 18700 | 1 | 0 | 24.2 | 23.64 | 0.06 | 1.02 | 1.09 | 1.16 |
| | LTE 2 | QPSK20M | Rear Face | 18900 | 1 | 0 | 24.2 | 23.75 | 0.01 | 1.01 | 1.06 | 1.12 |
| 35 | LTE 2 | QPSK20M | Rear Face | 19100 | 1 | 0 | 24.2 | 23.84 | 0.04 | 1.04 | 1.04 | **1.13** |
| | LTE 2 | QPSK20M | Rear Face | 19100 | 1 | 0 | 24.2 | 23.84 | 0.01 | 1 | 1.04 | 1.09 |
| | LTE 4 | QPSK20M | Rear Face | 20050 | 1 | 0 | 24.2 | 23.64 | 0.06 | 0.883 | 1.09 | 1.00 |
| | LTE 4 | QPSK20M | Rear Face | 20175 | 1 | 0 | 24.2 | 23.55 | 0.01 | 0.971 | 1.11 | 1.13 |
| 36 | LTE 4 | QPSK20M | Rear Face | 20300 | 1 | 0 | 24.2 | 23.53 | -0.04 | 0.99 | 1.11 | **1.16** |
| | LTE 4 | QPSK20M | Rear Face | 20300 | 1 | 0 | 24.2 | 23.53 | -0.01 | 0.967 | 1.11 | 1.13 |
| 37 | LTE 5 | QPSK10M | Rear Face | 20525 | 1 | 0 | 24.0 | 22.94 | 0.01 | 0.36 | 1.14 | **0.46** |
| 38 | LTE 7 | QPSK20M | Rear Face | 21350 | 1 | 0 | 24.0 | 22.64 | -0.06 | 0.908 | 1.09 | **1.24** |
| | LTE 7 | QPSK20M | Rear Face | 20850 | 1 | 0 | 24.0 | 22.52 | 0.09 | 0.846 | 1.12 | 1.19 |
| | LTE 7 | QPSK20M | Rear Face | 21100 | 1 | 0 | 24.0 | 22.61 | -0.01 | 0.839 | 1.09 | 1.16 |
| | LTE 7 | QPSK20M | Rear Face | 21350 | 1 | 0 | 24.0 | 22.64 | -0.01 | 0.899 | 1.09 | 1.23 |
| 40 | LTE 12 | QPSK10M | Rear Face | 23130 | 1 | 0 | 24.0 | 23.58 | -0.02 | 0.412 | 1.10 | **0.45** |
| 41 | LTE 13 | QPSK10M | Rear Face | 23230 | 1 | 0 | 24.0 | 23.19 | 0.01 | 0.399 | 1.07 | **0.48** |
| 42 | LTE 14 | QPSK10M | Rear Face | 23330 | 1 | 0 | 24.0 | 23.24 | 0.02 | 0.37 | 1.06 | **0.44** |
| | LTE 25 | QPSK20M | Rear Face | 26365 | 1 | 0 | 24.2 | 23.65 | 0.01 | 0.918 | 1.08 | 1.04 |
| 43 | LTE 25 | QPSK20M | Rear Face | 26140 | 1 | 0 | 24.2 | 23.73 | 0.04 | 1.05 | 1.06 | **1.17** |
| | LTE 25 | QPSK20M | Rear Face | 26590 | 1 | 0 | 24.2 | 23.76 | 0.07 | 0.908 | 1.06 | 1.00 |
| | LTE 25 | QPSK20M | Rear Face | 26140 | 1 | 0 | 24.2 | 23.73 | 0.07 | 1.01 | 1.06 | 1.13 |
| 44 | LTE 26 | QPSK15M | Rear Face | 26865 | 1 | 0 | 24.5 | 23.99 | -0.04 | 0.402 | 1.12 | **0.45** |
| 26 | LTE 30 | QPSK10M | Rear Face | 27710 | 1 | 0 | 24.0 | 23.67 | 0.00 | 0.354 | 1.08 | **0.38** |
| 45 | LTE 38 | QPSK20M | Rear Face | 38150 | 1 | 0 | 24.0 | 22.97 | 0.00 | 0.53 | 1.13 | **0.67** |
| 27 | LTE 40 | QPSK10M | Rear Face | 38750 | 1 | 0 | 23.5 | 23.12 | 0.09 | 0.323 | 1.09 | **0.35** |
| 47 | LTE 41 | QPSK20M | Rear Face | 41490 | 1 | 0 | 24.5 | 24.06 | 0.01 | 0.47 | 1.11 | **0.52** |
| 48 | LTE 66 | QPSK20M | Rear Face | 132572 | 1 | 0 | 24.2 | 23.61 | -0.08 | 1.01 | 1.15 | **1.16** |
| | LTE 66 | QPSK20M | Rear Face | 132072 | 1 | 0 | 24.2 | 23.54 | -0.06 | 0.934 | 1.16 | 1.09 |
| | LTE 66 | QPSK20M | Rear Face | 132422 | 1 | 0 | 24.2 | 23.58 | 0.00 | 0.972 | 1.15 | 1.12 |
| | LTE 66 | QPSK20M | Rear Face | 132572 | 1 | 0 | 24.2 | 23.61 | -0.01 | 0.968 | 1.15 | 1.11 |

| Plot No. | Band | Mode | Test Position | Ch. | Max. Tune-up Power (dBm) | Measured Conducted Power (dBm) | Power Drift (dB) | Measured SAR-1g (W/kg) | Scaling Factor | Scaled SAR-1g (W/kg) |
|---|---|---|---|---|---|---|---|---|---|---|
| 49 | 802.11b | - | Rear Face | 1 | 18.0 | 17.76 | 0.00 | 0.169 | 1.06 | **0.18** |
| 28 | 802.11n | HT20 | Rear Face | 64 | 18.0 | 17.65 | 0.00 | 0.331 | 1.08 | **0.36** |
| 29 | 802.11n | HT40 | Rear Face | 134 | 17.0 | 16.49 | 0.05 | 0.279 | 1.12 | **0.31** |
| 51 | 802.11n | HT40 | Rear Face | 151 | 17.5 | 17.26 | 0.06 | 0.27 | 1.06 | **0.29** |
| 52 | BT | GFSK | Rear Face | 39 | 9.5 | 9.34 | 0.05 | 0.134 | 1.04 | **0.14** |

### 4.7.4 SAR Results for Hotspot Exposure Condition (Separation Distance is 1.0 cm Gap)

| Plot No. | Band | Mode | Test Position | Ch. | Earphone | Max. Tune-up Power (dBm) | Measured Conducted Power (dBm) | Power Drift (dB) | Measured SAR-1g (W/kg) | Scaling Factor | Scaled SAR-1g (W/kg) |
|---|---|---|---|---|---|---|---|---|---|---|---|
| 30 | GSM850 | GPRS12 | Rear Face | 128 | - | 30.0 | 29.92 | -0.09 | 0.553 | 1.02 | **0.56** |
| 31 | GSM1900 | GPRS12 | Rear Face | 512 | - | 27.8 | 26.79 | 0.15 | 0.549 | 1.26 | **0.69** |
| 32 | WCDMA II | RMC12.2K | Rear Face | 9262 | - | 24.5 | 24.31 | 0.02 | 1.41 | 1.04 | **1.47** |
| | WCDMA II | RMC12.2K | Rear Face | 9400 | - | 24.5 | 24.29 | -0.05 | 1.32 | 1.05 | 1.39 |
| | WCDMA II | RMC12.2K | Rear Face | 9538 | - | 24.5 | 24.45 | 0.03 | 1.3 | 1.01 | 1.32 |
| | WCDMA II | RMC12.2K | Rear Face | 9262 | V | 24.5 | 24.31 | 0.00 | 1.39 | 1.04 | 1.45 |
| | WCDMA II | RMC12.2K | Rear Face | 9400 | V | 24.5 | 24.29 | -0.02 | 1.31 | 1.05 | 1.37 |
| | WCDMA II | RMC12.2K | Rear Face | 9538 | V | 24.5 | 24.45 | 0.01 | 1.28 | 1.01 | 1.29 |
| | WCDMA II | RMC12.2K | Rear Face | 9262 | - | 24.5 | 24.31 | 0.01 | 1.38 | 1.04 | 1.44 |
| 33 | WCDMA IV | RMC12.2K | Rear Face | 1513 | - | 24.5 | 24.19 | 0.02 | 1.18 | 1.07 | **1.27** |
| | WCDMA IV | RMC12.2K | Rear Face | 1312 | - | 24.5 | 24.13 | 0.03 | 1.05 | 1.09 | 1.14 |
| | WCDMA IV | RMC12.2K | Rear Face | 1413 | - | 24.5 | 24.08 | 0.01 | 1.01 | 1.10 | 1.11 |
| | WCDMA IV | RMC12.2K | Rear Face | 1513 | V | 24.5 | 24.19 | 0.01 | 1.12 | 1.07 | 1.20 |
| | WCDMA IV | RMC12.2K | Rear Face | 1513 | - | 24.5 | 24.19 | 0.02 | 1.11 | 1.07 | 1.19 |
| 34 | WCDMA V | RMC12.2K | Rear Face | 4132 | - | 25.0 | 24.54 | 0.00 | 0.508 | 1.11 | **0.56** |

| Plot No. | Band | Mode | Test Position | Ch. | RB# | RB Offset | Max. Tune-up Power (dBm) | Measured Conducted Power (dBm) | Power Drift (dB) | Measured SAR-1g (W/kg) | Scaling Factor | Scaled SAR-1g (W/kg) |
|---|---|---|---|---|---|---|---|---|---|---|---|---|
| | LTE 2 | QPSK20M | Rear Face | 18700 | 1 | 0 | 24.2 | 23.64 | 0.06 | 1.02 | 1.09 | 1.16 |
| | LTE 2 | QPSK20M | Rear Face | 18900 | 1 | 0 | 24.2 | 23.75 | 0.01 | 1.01 | 1.06 | 1.12 |
| 35 | LTE 2 | QPSK20M | Rear Face | 19100 | 1 | 0 | 24.2 | 23.84 | 0.04 | 1.04 | 1.04 | **1.13** |
| | LTE 2 | QPSK20M | Rear Face | 19100 | 1 | 0 | 24.2 | 23.84 | 0.01 | 1 | 1.04 | 1.09 |
| | LTE 4 | QPSK20M | Rear Face | 20050 | 1 | 0 | 24.2 | 23.64 | 0.06 | 0.883 | 1.09 | 1.00 |
| | LTE 4 | QPSK20M | Rear Face | 20175 | 1 | 0 | 24.2 | 23.55 | 0.01 | 0.971 | 1.11 | 1.13 |
| 36 | LTE 4 | QPSK20M | Rear Face | 20300 | 1 | 0 | 24.2 | 23.53 | -0.04 | 0.99 | 1.11 | **1.16** |
| | LTE 4 | QPSK20M | Rear Face | 20300 | 1 | 0 | 24.2 | 23.53 | -0.01 | 0.967 | 1.11 | 1.13 |
| 37 | LTE 5 | QPSK10M | Rear Face | 20525 | 1 | 0 | 24.0 | 22.94 | 0.01 | 0.36 | 1.14 | **0.46** |
| 38 | LTE 7 | QPSK20M | Rear Face | 21350 | 1 | 0 | 24.0 | 22.64 | -0.06 | 0.908 | 1.09 | **1.24** |
| | LTE 7 | QPSK20M | Rear Face | 20850 | 1 | 0 | 24.0 | 22.52 | 0.09 | 0.846 | 1.12 | 1.19 |
| | LTE 7 | QPSK20M | Rear Face | 21100 | 1 | 0 | 24.0 | 22.61 | -0.01 | 0.839 | 1.09 | 1.16 |
| | LTE 7 | QPSK20M | Rear Face | 21350 | 1 | 0 | 24.0 | 22.64 | -0.01 | 0.899 | 1.09 | 1.23 |
| 39 | LTE 12 | QPSK10M | Rear Face | 23130 | 1 | 0 | 24.0 | 23.58 | -0.02 | 0.412 | 1.10 | **0.45** |
| 40 | LTE 13 | QPSK10M | Rear Face | 23230 | 1 | 0 | 24.0 | 23.19 | 0.01 | 0.399 | 1.07 | **0.48** |
| 41 | LTE 14 | QPSK10M | Rear Face | 23330 | 1 | 0 | 24.0 | 23.24 | 0.02 | 0.37 | 1.06 | **0.44** |

| Plot No. | Band | Mode | Test Position | Ch. | RB# | RB Offset | Max. Tune-up Power (dBm) | Measured Conducted Power (dBm) | Power Drift (dB) | Measured SAR-1g (W/kg) | Scaling Factor | Scaled SAR-1g (W/kg) |
|---|---|---|---|---|---|---|---|---|---|---|---|---|
| | LTE 25 | QPSK20M | Rear Face | 26365 | 1 | 0 | 24.2 | 23.65 | 0.01 | 0.918 | 1.08 | 1.04 |
| 42 | LTE 25 | QPSK20M | Rear Face | 26140 | 1 | 0 | 24.2 | 23.73 | 0.04 | 1.05 | 1.06 | **1.17** |
| | LTE 25 | QPSK20M | Rear Face | 26590 | 1 | 0 | 24.2 | 23.76 | 0.07 | 0.908 | 1.06 | 1.00 |
| | LTE 25 | QPSK20M | Rear Face | 26140 | 1 | 0 | 24.2 | 23.73 | 0.07 | 1.01 | 1.06 | 1.13 |
| 43 | LTE 26 | QPSK15M | Rear Face | 26865 | 1 | 0 | 24.5 | 23.99 | -0.04 | 0.402 | 1.12 | **0.45** |
| 44 | LTE 30 | QPSK10M | Bottom Side | 27710 | 1 | 0 | 24.0 | 23.67 | -0.07 | 0.332 | 1.08 | **0.36** |
| 45 | LTE 38 | QPSK20M | Rear Face | 38150 | 1 | 0 | 24.0 | 22.97 | 0.00 | 0.53 | 1.13 | **0.67** |
| 46 | LTE 40 | QPSK10M | Bottom Side | 38750 | 1 | 0 | 23.5 | 23.12 | -0.07 | 0.333 | 1.09 | **0.36** |
| 47 | LTE 41 | QPSK20M | Rear Face | 41490 | 1 | 0 | 24.5 | 24.06 | 0.01 | 0.47 | 1.11 | **0.52** |
| 48 | LTE 66 | QPSK20M | Rear Face | 132572 | 1 | 0 | 24.2 | 23.61 | -0.08 | 1.01 | 1.15 | **1.16** |
| | LTE 66 | QPSK20M | Rear Face | 132072 | 1 | 0 | 24.2 | 23.54 | -0.06 | 0.934 | 1.16 | 1.09 |
| | LTE 66 | QPSK20M | Rear Face | 132422 | 1 | 0 | 24.2 | 23.58 | 0.00 | 0.972 | 1.15 | 1.12 |
| | LTE 66 | QPSK20M | Rear Face | 132572 | 1 | 0 | 24.2 | 23.61 | -0.01 | 0.968 | 1.15 | 1.11 |

| Plot No. | Band | Mode | Test Position | Ch. | Max. Tune-up Power (dBm) | Measured Conducted Power (dBm) | Power Drift (dB) | Measured SAR-1g (W/kg) | Scaling Factor | Scaled SAR-1g (W/kg) |
|---|---|---|---|---|---|---|---|---|---|---|
| 49 | 802.11b | - | Rear Face | 1 | 18.0 | 17.76 | 0.00 | 0.169 | 1.06 | **0.18** |
| 50 | 802.11a | - | Rear Face | 48 | 17.0 | 16.57 | 0.03 | 0.238 | 1.10 | **0.26** |
| 51 | 802.11n | HT40 | Rear Face | 151 | 17.5 | 17.26 | 0.06 | 0.27 | 1.06 | **0.29** |
| 52 | BT | GFSK | Rear Face | 39 | 9.5 | 9.34 | 0.05 | 0.134 | 1.04 | **0.14** |

### 4.7.5 SAR Results for Extremity Exposure Condition (Separation Distance is 0 cm Gap)

| Plot No. | Band | Mode | Test Position | Ch. | Max. Tune-up Power (dBm) | Measured Conducted Power (dBm) | Power Drift (dB) | Measured SAR-10g (W/kg) | Scaling Factor | Scaled SAR-10g (W/kg) |
|---|---|---|---|---|---|---|---|---|---|---|
| 53 | WCDMA II | RMC12.2K | Rear Face | 9262 | 24.5 | 24.31 | 0.03 | 8.19 | 1.04 | **3.90** |
| | WCDMA II | RMC12.2K | Rear Face | 9400 | 24.5 | 24.29 | 0.01 | 8.01 | 1.05 | 3.82 |
| | WCDMA II | RMC12.2K | Rear Face | 9538 | 24.5 | 24.45 | 0.09 | 7.48 | 1.01 | 3.44 |
| | WCDMA II | RMC12.2K | Rear Face | 9262 | 24.5 | 24.31 | 0.01 | 8.14 | 1.04 | 3.87 |
| 54 | WCDMA IV | RMC12.2K | Rear Face | 1513 | 24.5 | 24.19 | 0.09 | 6.94 | 1.07 | **3.60** |
| | WCDMA IV | RMC12.2K | Rear Face | 1312 | 24.5 | 24.13 | 0.05 | 6.17 | 1.09 | 3.25 |
| | WCDMA IV | RMC12.2K | Rear Face | 1413 | 24.5 | 24.08 | -0.15 | 5.94 | 1.10 | 3.14 |
| | WCDMA IV | RMC12.2K | Rear Face | 1513 | 24.5 | 24.19 | 0.02 | 6.86 | 1.07 | 3.55 |

| Plot No. | Band | Mode | Test Position | Ch. | RB# | RB Offset | Max. Tune-up Power (dBm) | Measured Conducted Power (dBm) | Power Drift (dB) | Measured SAR-10g (W/kg) | Scaling Factor | Scaled SAR-10g (W/kg) |
|---|---|---|---|---|---|---|---|---|---|---|---|---|
| 55 | LTE 4 | QPSK20M | Rear Face | 20050 | 1 | 0 | 24.2 | 23.64 | 0.00 | 5.38 | 1.09 | **3.00** |
| | LTE 4 | QPSK20M | Rear Face | 20175 | 1 | 0 | 24.2 | 23.55 | 0.06 | 4.79 | 1.11 | 2.73 |
| | LTE 4 | QPSK20M | Rear Face | 20300 | 1 | 0 | 24.2 | 23.53 | -0.12 | 5.27 | 1.11 | 3.01 |
| | LTE 4 | QPSK20M | Rear Face | 20050 | 1 | 0 | 24.2 | 23.64 | 0.03 | 5.28 | 1.09 | 2.95 |
| 56 | LTE 7 | QPSK20M | Rear Face | 20850 | 1 | 0 | 24.0 | 22.52 | -0.17 | 2.01 | 1.12 | **1.16** |
| | LTE 25 | QPSK20M | Rear Face | 26365 | 1 | 0 | 24.2 | 23.65 | -0.03 | 5.35 | 1.08 | 2.81 |
| | LTE 25 | QPSK20M | Rear Face | 26140 | 1 | 0 | 24.2 | 23.73 | 0.00 | 5.29 | 1.06 | 2.71 |
| 57 | LTE 25 | QPSK20M | Rear Face | 26590 | 1 | 0 | 24.2 | 23.76 | 0.06 | 6.12 | 1.06 | **3.15** |
| | LTE 25 | QPSK20M | Rear Face | 26590 | 1 | 0 | 24.2 | 23.76 | 0.09 | 6.01 | 1.06 | 3.09 |

| Plot No. | Band | Mode | Test Position | Ch. | RB# | RB Offset | Max. Tune-up Power (dBm) | Measured Conducted Power (dBm) | Power Drift (dB) | Measured SAR-10g (W/kg) | Scaling Factor | Scaled SAR-10g (W/kg) |
|---|---|---|---|---|---|---|---|---|---|---|---|---|
| | LTE 66 | QPSK20M | Rear Face | 132572 | 1 | 0 | 24.2 | 23.61 | -0.01 | 4.94 | 1.15 | 2.81 |
| | LTE 66 | QPSK20M | Rear Face | 132072 | 1 | 0 | 24.2 | 23.54 | 0.00 | 5.14 | 1.16 | 2.95 |
| 58 | LTE 66 | QPSK20M | Rear Face | 132422 | 1 | 0 | 24.2 | 23.58 | -0.07 | 5.35 | 1.15 | **3.01** |
| | LTE 66 | QPSK20M | Rear Face | 132422 | 1 | 0 | 24.2 | 23.58 | -0.01 | 5.28 | 1.15 | 2.96 |

| Plot No. | Band | Mode | Test Position | Ch. | Max. Tune-up Power (dBm) | Measured Conducted Power (dBm) | Power Drift (dB) | Measured SAR-10g (W/kg) | Scaling Factor | Scaled SAR-10g (W/kg) |
|---|---|---|---|---|---|---|---|---|---|---|
| 59 | 802.11n | HT20 | Rear Face | 60 | 17.5 | 17.13 | 0.02 | 1.6 | 1.09 | **0.51** |
| 60 | 802.11n | HT40 | Rear Face | 134 | 17.0 | 16.49 | 0.03 | 0.993 | 1.12 | **0.32** |

### 4.7.6 SAR Measurement Variability

According to KDB 865664 D01, SAR measurement variability was assessed for each frequency band, which is determined by the SAR probe calibration point and tissue-equivalent medium used for the device measurements. When both head and body tissue-equivalent media are required for SAR measurements in a frequency band, the variability measurement procedures should be applied to the tissue medium with the highest measured SAR, using the highest measured SAR configuration for that tissue-equivalent medium. Alternatively, if the highest measured SAR for both head and body tissue-equivalent media are ≤ 1.45 W/kg and the ratio of these highest SAR values, i.e., largest divided by smallest value, is ≤ 1.10, the highest SAR configuration for either head or body tissue-equivalent medium may be used to perform the repeated measurement. These additional measurements are repeated after the completion of all measurements requiring the same head or body tissue-equivalent medium in a frequency band. The test device should be returned to ambient conditions (normal room temperature) with the battery fully charged before it is re-mounted on the device holder for the repeated measurement(s) to minimize any unexpected variations in the repeated results.

SAR repeated measurement procedure:

1. When the highest measured SAR is < 0.80 W/kg, repeated measurement is not required.
2. When the highest measured SAR is >= 0.80 W/kg, repeat that measurement once.
3. If the ratio of largest to smallest SAR for the original and first repeated measurements is > 1.20, or when the original or repeated measurement is >= 1.45 W/kg, perform a second repeated measurement.
4. If the ratio of largest to smallest SAR for the original, first and second repeated measurements is > 1.20, and the original, first or second repeated measurement is >= 1.5 W/kg, perform a third repeated measurement.

| Band | Mode | Test Position | Separation Distance (cm) | Ch. | Original Measured SAR-1g (W/kg) | 1st Repeated SAR-1g (W/kg) | L/S Ratio | 2nd Repeated SAR-1g (W/kg) | L/S Ratio | 3rd Repeated SAR-1g (W/kg) | L/S Ratio |
|---|---|---|---|---|---|---|---|---|---|---|---|
| 802.11n | HT20 | Right Cheek | 1 | 60 | 0.98 | 0.975 | 1.01 | N/A | N/A | N/A | N/A |
| 802.11n | HT40 | Right Cheek | 1 | 134 | 0.939 | 0.888 | 1.06 | N/A | N/A | N/A | N/A |
| 802.11n | HT40 | Right Cheek | 1 | 151 | 1.03 | 0.989 | 1.04 | N/A | N/A | N/A | N/A |
| WCDMA II | RMC12.2K | Rear Face | 1 | 9262 | 1.41 | 1.38 | 1.02 | N/A | N/A | N/A | N/A |
| WCDMA IV | RMC12.2K | Rear Face | 1 | 1513 | 1.18 | 1.11 | 1.06 | N/A | N/A | N/A | N/A |
| LTE 2 | QPSK20M | Rear Face | 1 | 19100 | 1.04 | 1 | 1.04 | N/A | N/A | N/A | N/A |
| LTE 4 | QPSK20M | Rear Face | 1 | 20300 | 0.99 | 0.967 | 1.02 | N/A | N/A | N/A | N/A |
| LTE 7 | QPSK20M | Rear Face | 1 | 21350 | 0.908 | 0.899 | 1.01 | N/A | N/A | N/A | N/A |
| LTE 66 | QPSK20M | Rear Face | 1 | 132572 | 1.01 | 0.968 | 1.04 | N/A | N/A | N/A | N/A |
| WCDMA II | RMC12.2K | Rear Face | 0 | 9262 | 3.73 | 3.7 | 1.01 | N/A | N/A | N/A | N/A |
| WCDMA IV | RMC12.2K | Rear Face | 0 | 1513 | 3.35 | 3.31 | 1.01 | N/A | N/A | N/A | N/A |
| LTE 4 | QPSK20M | Rear Face | 0 | 20050 | 2.64 | 2.59 | 1.02 | N/A | N/A | N/A | N/A |
| LTE 25 | QPSK20M | Rear Face | 0 | 26590 | 2.85 | 2.79 | 1.02 | N/A | N/A | N/A | N/A |
| LTE 66 | QPSK20M | Rear Face | 0 | 132422 | 2.61 | 2.57 | 1.02 | N/A | N/A | N/A | N/A |

**<SAR Summation Analysis>**

Simultaneous transmission SAR test exclusion is determined for each operating configuration and exposure condition according to the reported standalone SAR of each applicable simultaneous transmitting antenna. When the sum of $SAR_{1g}$ of all simultaneously transmitting antennas in an operating mode and exposure condition combination is within the SAR limit ($SAR_{1g}$ 1.6 W/kg), the simultaneous transmission SAR is not required. When the sum of $SAR_{1g}$ is greater than the SAR limit ($SAR_{1g}$ 1.6 W/kg), SAR test exclusion is determined by the SPLSR.

| No. | Conditions (SAR1 + SAR2) | Exposure Condition | Test Position | Max. SAR1 | Max. SAR2 | SAR Summation | SPLSR Analysis |
|---|---|---|---|---|---|---|---|
| 1 | GSM850 + WLAN (DTS) | Head | Right Cheek | 0.33 | **0.49** | **0.82** | ∑SAR < 1.6, Not required |
| | | | Right Tilted | 0.17 | 0.46 | **0.63** | ∑SAR < 1.6, Not required |
| | | | Left Cheek | **0.31** | 0.34 | **0.65** | ∑SAR < 1.6, Not required |
| | | | Left Tilted | 0.18 | 0.26 | **0.44** | ∑SAR < 1.6, Not required |
| | | Body-Worn | Front Face | 0.36 | 0.13 | **0.49** | ∑SAR < 1.6, Not required |
| | | | Rear Face | **0.56** | **0.18** | **0.74** | ∑SAR < 1.6, Not required |
| | | Hotspot | Front Face | 0.36 | 0.13 | **0.49** | ∑SAR < 1.6, Not required |
| | | | Rear Face | **0.56** | **0.18** | **0.74** | ∑SAR < 1.6, Not required |
| | | | Left Side | 0.37 | 0.10 | **0.47** | ∑SAR < 1.6, Not required |
| | | | Right Side | 0.24 | 0.04 | **0.28** | ∑SAR < 1.6, Not required |
| | | | Top Side | 0.00 | 0.12 | **0.12** | ∑SAR < 1.6, Not required |
| | | | Bottom Side | 0.12 | 0.00 | **0.12** | ∑SAR < 1.6, Not required |
| 2 | GSM850 + WLAN (NII) | Head | Right Cheek | 0.33 | **1.11** | **1.44** | ∑SAR < 1.6, Not required |
| | | | Right Tilted | 0.17 | 1.10 | **1.27** | ∑SAR < 1.6, Not required |
| | | | Left Cheek | **0.31** | 1.02 | **1.33** | ∑SAR < 1.6, Not required |
| | | | Left Tilted | 0.18 | 1.00 | **1.18** | ∑SAR < 1.6, Not required |
| | | Body-Worn | Front Face | 0.36 | 0.30 | **0.66** | ∑SAR < 1.6, Not required |
| | | | Rear Face | **0.56** | **0.36** | **0.92** | ∑SAR < 1.6, Not required |
| | | Hotspot | Front Face | 0.36 | 0.29 | **0.65** | ∑SAR < 1.6, Not required |
| | | | Rear Face | **0.56** | **0.29** | **0.85** | ∑SAR < 1.6, Not required |
| | | | Left Side | 0.37 | 0.22 | **0.59** | ∑SAR < 1.6, Not required |
| | | | Right Side | 0.24 | 0.05 | **0.29** | ∑SAR < 1.6, Not required |
| | | | Top Side | 0.00 | 0.47 | **0.47** | ∑SAR < 1.6, Not required |
| | | | Bottom Side | 0.12 | 0.00 | **0.12** | ∑SAR < 1.6, Not required |

| No. | Conditions (SAR1 + SAR2) | Exposure Condition | Test Position | Max. SAR1 | Max. SAR2 | SAR Summation | SPLSR Analysis |
|---|---|---|---|---|---|---|---|
| 3 | GSM850 + BT (DSS) | Head | Right Cheek | 0.33 | **0.23** | **0.56** | ∑SAR < 1.6, Not required |
| | | | Right Tilted | 0.17 | 0.04 | **0.21** | ∑SAR < 1.6, Not required |
| | | | Left Cheek | **0.31** | 0.03 | **0.34** | ∑SAR < 1.6, Not required |
| | | | Left Tilted | 0.18 | 0.02 | **0.20** | ∑SAR < 1.6, Not required |
| | | Body-Worn | Front Face | 0.36 | 0.03 | **0.39** | ∑SAR < 1.6, Not required |
| | | | Rear Face | **0.56** | **0.14** | **0.70** | ∑SAR < 1.6, Not required |
| | | Hotspot | Front Face | 0.36 | 0.03 | **0.39** | ∑SAR < 1.6, Not required |
| | | | Rear Face | **0.56** | **0.14** | **0.70** | ∑SAR < 1.6, Not required |
| | | | Left Side | 0.37 | 0.03 | **0.40** | ∑SAR < 1.6, Not required |
| | | | Right Side | 0.24 | 0.01 | **0.25** | ∑SAR < 1.6, Not required |
| | | | Top Side | 0.00 | 0.03 | **0.03** | ∑SAR < 1.6, Not required |
| | | | Bottom Side | 0.12 | 0.00 | **0.12** | ∑SAR < 1.6, Not required |

| No. | Conditions (SAR1 + SAR2) | Exposure Condition | Test Position | Max. SAR1 | Max. SAR2 | SAR Summation | SPLSR Analysis |
|---|---|---|---|---|---|---|---|
| 4 | GSM1900 + WLAN (DTS) | Head | Right Cheek | **0.39** | **0.49** | **0.88** | ∑SAR < 1.6, Not required |
| | | | Right Tilted | 0.10 | 0.46 | **0.56** | ∑SAR < 1.6, Not required |
| | | | Left Cheek | 0.19 | 0.34 | **0.53** | ∑SAR < 1.6, Not required |
| | | | Left Tilted | 0.08 | 0.26 | **0.34** | ∑SAR < 1.6, Not required |
| | | Body-Worn | Front Face | 0.36 | 0.13 | **0.49** | ∑SAR < 1.6, Not required |
| | | | Rear Face | **0.69** | **0.18** | **0.87** | ∑SAR < 1.6, Not required |
| | | Hotspot | Front Face | 0.36 | 0.13 | **0.49** | ∑SAR < 1.6, Not required |
| | | | Rear Face | **0.69** | **0.18** | **0.87** | ∑SAR < 1.6, Not required |
| | | | Left Side | 0.05 | 0.10 | **0.15** | ∑SAR < 1.6, Not required |
| | | | Right Side | 0.44 | 0.04 | **0.48** | ∑SAR < 1.6, Not required |
| | | | Top Side | 0.00 | 0.12 | **0.12** | ∑SAR < 1.6, Not required |
| | | | Bottom Side | 0.51 | 0.00 | **0.51** | ∑SAR < 1.6, Not required |
| 5 | GSM1900 + WLAN (NII) | Head | Right Cheek | **0.39** | **1.11** | **1.50** | ∑SAR < 1.6, Not required |
| | | | Right Tilted | 0.10 | 1.10 | **1.20** | ∑SAR < 1.6, Not required |
| | | | Left Cheek | 0.19 | 1.02 | **1.21** | ∑SAR < 1.6, Not required |
| | | | Left Tilted | 0.08 | 1.00 | **1.08** | ∑SAR < 1.6, Not required |
| | | Body-Worn | Front Face | 0.36 | 0.30 | **0.66** | ∑SAR < 1.6, Not required |
| | | | Rear Face | **0.69** | **0.36** | **1.05** | ∑SAR < 1.6, Not required |
| | | Hotspot | Front Face | 0.36 | 0.29 | **0.65** | ∑SAR < 1.6, Not required |

| | | | | | | | |
|---|---|---|---|---|---|---|---|
| | | | Rear Face | **0.69** | **0.29** | **0.98** | ∑SAR < 1.6, Not required |
| | | | Left Side | 0.05 | 0.22 | **0.27** | ∑SAR < 1.6, Not required |
| | | | Right Side | 0.44 | 0.05 | **0.49** | ∑SAR < 1.6, Not required |
| | | | Top Side | 0.00 | 0.47 | **0.47** | ∑SAR < 1.6, Not required |
| | | | Bottom Side | 0.51 | 0.00 | **0.51** | ∑SAR < 1.6, Not required |
| **6** | **GSM1900 + BT (DSS)** | Head | Right Cheek | **0.39** | **0.23** | **0.62** | ∑SAR < 1.6, Not required |
| | | | Right Tilted | 0.10 | 0.04 | **0.14** | ∑SAR < 1.6, Not required |
| | | | Left Cheek | 0.19 | 0.03 | **0.22** | ∑SAR < 1.6, Not required |
| | | | Left Tilted | 0.08 | 0.02 | **0.10** | ∑SAR < 1.6, Not required |
| | | Body-Worn | Front Face | 0.36 | 0.03 | **0.39** | ∑SAR < 1.6, Not required |
| | | | Rear Face | **0.69** | **0.14** | **0.83** | ∑SAR < 1.6, Not required |
| | | Hotspot | Front Face | 0.36 | 0.03 | **0.39** | ∑SAR < 1.6, Not required |
| | | | Rear Face | **0.69** | **0.14** | **0.83** | ∑SAR < 1.6, Not required |
| | | | Left Side | 0.05 | 0.03 | **0.08** | ∑SAR < 1.6, Not required |
| | | | Right Side | 0.44 | 0.01 | **0.45** | ∑SAR < 1.6, Not required |
| | | | Top Side | 0.00 | 0.03 | **0.03** | ∑SAR < 1.6, Not required |
| | | | Bottom Side | 0.51 | 0.00 | **0.51** | ∑SAR < 1.6, Not required |

| No. | Conditions (SAR1 + SAR2) | Exposure Condition | Test Position | Max. SAR1 | Max. SAR2 | SAR Summation | SPLSR Analysis |
|---|---|---|---|---|---|---|---|
| **7** | **WCDMA II + WLAN (DTS)** | Head | Right Cheek | **0.81** | **0.49** | **1.30** | ∑SAR < 1.6, Not required |
| | | | Right Tilted | 0.20 | 0.46 | **0.66** | ∑SAR < 1.6, Not required |
| | | | Left Cheek | 0.38 | 0.34 | **0.72** | ∑SAR < 1.6, Not required |
| | | | Left Tilted | 0.16 | 0.26 | **0.42** | ∑SAR < 1.6, Not required |
| | | Body-Worn | Front Face | 0.84 | 0.13 | **0.97** | ∑SAR < 1.6, Not required |
| | | | Rear Face | **1.47** | **0.18** | **1.65** | **Analyzed as below** |
| | | Hotspot | Front Face | 0.84 | 0.13 | **0.97** | ∑SAR < 1.6, Not required |
| | | | Rear Face | **1.47** | **0.18** | **1.65** | **Analyzed as below** |
| | | | Left Side | 0.12 | 0.10 | **0.22** | ∑SAR < 1.6, Not required |
| | | | Right Side | 1.07 | 0.04 | **1.11** | ∑SAR < 1.6, Not required |
| | | | Top Side | 0.00 | 0.12 | **0.12** | ∑SAR < 1.6, Not required |
| | | | Bottom Side | 1.19 | 0.00 | **1.19** | ∑SAR < 1.6, Not required |
| **8** | **WCDMA II + WLAN (NII)** | Head | Right Cheek | **0.81** | 1.11 | **1.92** | **Analyzed as below** |
| | | | Right Tilted | 0.20 | 1.10 | **1.30** | ∑SAR < 1.6, Not required |
| | | | Left Cheek | 0.38 | 1.02 | **1.40** | ∑SAR < 1.6, Not required |
| | | | Left Tilted | 0.16 | 1.00 | **1.16** | ∑SAR < 1.6, Not required |

| | | | | | | | |
|---|---|---|---|---|---|---|---|
| | | Body-Worn | Front Face | 0.84 | 0.30 | **1.14** | ∑SAR < 1.6, Not required |
| | | | Rear Face | **1.47** | 0.36 | **1.83** | **Analyzed as below** |
| | | Hotspot | Front Face | 0.84 | 0.29 | **1.13** | ∑SAR < 1.6, Not required |
| | | | Rear Face | **1.47** | 0.29 | **1.76** | **Analyzed as below** |
| | | | Left Side | 0.12 | 0.22 | **0.34** | ∑SAR < 1.6, Not required |
| | | | Right Side | 1.07 | 0.05 | **1.12** | ∑SAR < 1.6, Not required |
| | | | Top Side | 0.00 | 0.47 | **0.47** | ∑SAR < 1.6, Not required |
| | | | Bottom Side | 1.19 | 0.00 | **1.19** | ∑SAR < 1.6, Not required |
| | | Extremity | Rear Face | **3.90** | **0.51** | **4.41** | **Analyzed as below** |
| **9** | **WCDMA II + BT (DSS)** | Head | Right Cheek | **0.81** | **0.23** | **1.04** | ∑SAR < 1.6, Not required |
| | | | Right Tilted | 0.20 | 0.04 | **0.24** | ∑SAR < 1.6, Not required |
| | | | Left Cheek | 0.38 | 0.03 | **0.41** | ∑SAR < 1.6, Not required |
| | | | Left Tilted | 0.16 | 0.02 | **0.18** | ∑SAR < 1.6, Not required |
| | | Body-Worn | Front Face | 0.84 | 0.03 | **0.87** | ∑SAR < 1.6, Not required |
| | | | Rear Face | **1.47** | **0.14** | **1.61** | ∑SAR < 1.6, Not required |
| | | Hotspot | Front Face | 0.84 | 0.03 | **0.87** | ∑SAR < 1.6, Not required |
| | | | Rear Face | **1.47** | **0.14** | **1.61** | ∑SAR < 1.6, Not required |
| | | | Left Side | 0.12 | 0.03 | **0.15** | ∑SAR < 1.6, Not required |
| | | | Right Side | 1.07 | 0.01 | **1.08** | ∑SAR < 1.6, Not required |
| | | | Top Side | 0.00 | 0.03 | **0.03** | ∑SAR < 1.6, Not required |
| | | | Bottom Side | 1.19 | 0.00 | **1.19** | ∑SAR < 1.6, Not required |

| No. | Conditions (SAR1 + SAR2) | Exposure Condition | Test Position | Max. SAR1 | Max. SAR2 | SAR Summation | SPLSR Analysis |
|---|---|---|---|---|---|---|---|
| **10** | **WCDMA IV + WLAN (DTS)** | Head | Right Cheek | **0.67** | **0.49** | **1.16** | ∑SAR < 1.6, Not required |
| | | | Right Tilted | 0.29 | 0.46 | **0.75** | ∑SAR < 1.6, Not required |
| | | | Left Cheek | 0.31 | 0.34 | **0.65** | ∑SAR < 1.6, Not required |
| | | | Left Tilted | 0.19 | 0.26 | **0.45** | ∑SAR < 1.6, Not required |
| | | Body-Worn | Front Face | 0.74 | 0.13 | **0.87** | ∑SAR < 1.6, Not required |
| | | | Rear Face | **1.27** | **0.18** | **1.45** | ∑SAR < 1.6, Not required |
| | | Hotspot | Front Face | 0.74 | 0.13 | **0.87** | ∑SAR < 1.6, Not required |
| | | | Rear Face | **1.27** | **0.18** | **1.45** | ∑SAR < 1.6, Not required |
| | | | Left Side | 0.16 | 0.10 | **0.26** | ∑SAR < 1.6, Not required |
| | | | Right Side | 0.33 | 0.04 | **0.37** | ∑SAR < 1.6, Not required |
| | | | Top Side | 0.00 | 0.12 | **0.12** | ∑SAR < 1.6, Not required |
| | | | Bottom Side | 1.14 | 0.00 | **1.14** | ∑SAR < 1.6, Not required |

| No. | Conditions (SAR1 + SAR2) | Exposure Condition | Test Position | Max. SAR1 | Max. SAR2 | SAR Summation | SPLSR Analysis |
|---|---|---|---|---|---|---|---|
| 11 | WCDMA IV + WLAN (NII) | Head | Right Cheek | **0.67** | **1.11** | **1.78** | **Analyzed as below** |
| | | | Right Tilted | 0.29 | 1.10 | **1.39** | ∑SAR < 1.6, Not required |
| | | | Left Cheek | 0.31 | 1.02 | **1.33** | ∑SAR < 1.6, Not required |
| | | | Left Tilted | 0.19 | 1.00 | **1.19** | ∑SAR < 1.6, Not required |
| | | Body-Worn | Front Face | 0.74 | 0.30 | **1.04** | ∑SAR < 1.6, Not required |
| | | | Rear Face | **1.27** | **0.36** | **1.63** | **Analyzed as below** |
| | | Hotspot | Front Face | 0.74 | 0.29 | **1.03** | ∑SAR < 1.6, Not required |
| | | | Rear Face | **1.27** | **0.29** | **1.56** | **Analyzed as below** |
| | | | Left Side | 0.16 | 0.22 | **0.38** | ∑SAR < 1.6, Not required |
| | | | Right Side | 0.33 | 0.05 | **0.38** | ∑SAR < 1.6, Not required |
| | | | Top Side | 0.00 | 0.47 | **0.47** | ∑SAR < 1.6, Not required |
| | | | Bottom Side | 1.14 | 0.00 | **1.14** | ∑SAR < 1.6, Not required |
| | | Extremity | Rear Face | **3.60** | **0.51** | **4.41** | **Analyzed as below** |
| 12 | WCDMA IV + BT (DSS) | Head | Right Cheek | **0.67** | **0.23** | **0.90** | ∑SAR < 1.6, Not required |
| | | | Right Tilted | 0.29 | 0.04 | **0.33** | ∑SAR < 1.6, Not required |
| | | | Left Cheek | 0.31 | 0.03 | **0.34** | ∑SAR < 1.6, Not required |
| | | | Left Tilted | 0.19 | 0.02 | **0.21** | ∑SAR < 1.6, Not required |
| | | Body-Worn | Front Face | 0.74 | 0.03 | **0.77** | ∑SAR < 1.6, Not required |
| | | | Rear Face | **1.27** | **0.14** | **1.41** | ∑SAR < 1.6, Not required |
| | | Hotspot | Front Face | 0.74 | 0.03 | **0.77** | ∑SAR < 1.6, Not required |
| | | | Rear Face | **1.27** | **0.14** | **1.41** | ∑SAR < 1.6, Not required |
| | | | Left Side | 0.16 | 0.03 | **0.19** | ∑SAR < 1.6, Not required |
| | | | Right Side | 0.33 | 0.01 | **0.34** | ∑SAR < 1.6, Not required |
| | | | Top Side | 0.00 | 0.03 | **0.03** | ∑SAR < 1.6, Not required |
| | | | Bottom Side | 1.14 | 0.00 | **1.14** | ∑SAR < 1.6, Not required |

| No. | Conditions (SAR1 + SAR2) | Exposure Condition | Test Position | Max. SAR1 | Max. SAR2 | SAR Summation | SPLSR Analysis |
|---|---|---|---|---|---|---|---|
| 13 | WCDMA V + WLAN (DTS) | Head | Right Cheek | 0.20 | **0.49** | **0.69** | ∑SAR < 1.6, Not required |
| | | | Right Tilted | 0.16 | 0.46 | **0.62** | ∑SAR < 1.6, Not required |
| | | | Left Cheek | **0.34** | 0.34 | **0.68** | ∑SAR < 1.6, Not required |
| | | | Left Tilted | 0.16 | 0.26 | **0.42** | ∑SAR < 1.6, Not required |
| | | Body-Worn | Front Face | 0.43 | 0.13 | **0.56** | ∑SAR < 1.6, Not required |
| | | | Rear Face | **0.56** | **0.18** | **0.74** | ∑SAR < 1.6, Not required |
| | | Hotspot | Front Face | 0.43 | 0.13 | **0.56** | ∑SAR < 1.6, Not required |
| | | | Rear Face | **0.56** | **0.18** | **0.74** | ∑SAR < 1.6, Not required |
| | | | Left Side | 0.42 | 0.10 | **0.52** | ∑SAR < 1.6, Not required |
| | | | Right Side | 0.35 | 0.04 | **0.39** | ∑SAR < 1.6, Not required |
| | | | Top Side | 0.00 | 0.12 | **0.12** | ∑SAR < 1.6, Not required |
| | | | Bottom Side | 0.12 | 0.00 | **0.12** | ∑SAR < 1.6, Not required |
| 14 | WCDMA V + WLAN (NII) | Head | Right Cheek | 0.20 | **1.11** | **1.31** | ∑SAR < 1.6, Not required |
| | | | Right Tilted | 0.16 | 1.10 | **1.26** | ∑SAR < 1.6, Not required |
| | | | Left Cheek | **0.34** | 1.02 | **1.36** | ∑SAR < 1.6, Not required |
| | | | Left Tilted | 0.16 | 1.00 | **1.16** | ∑SAR < 1.6, Not required |
| | | Body-Worn | Front Face | 0.43 | 0.30 | **0.73** | ∑SAR < 1.6, Not required |
| | | | Rear Face | **0.56** | **0.36** | **0.92** | ∑SAR < 1.6, Not required |
| | | Hotspot | Front Face | 0.43 | 0.29 | **0.72** | ∑SAR < 1.6, Not required |
| | | | Rear Face | **0.56** | **0.29** | **0.85** | ∑SAR < 1.6, Not required |
| | | | Left Side | 0.42 | 0.22 | **0.64** | ∑SAR < 1.6, Not required |
| | | | Right Side | 0.35 | 0.05 | **0.40** | ∑SAR < 1.6, Not required |
| | | | Top Side | 0.00 | 0.47 | **0.47** | ∑SAR < 1.6, Not required |
| | | | Bottom Side | 0.12 | 0.00 | **0.12** | ∑SAR < 1.6, Not required |
| 15 | WCDMA V + BT (DSS) | Head | Right Cheek | 0.20 | **0.23** | **0.43** | ∑SAR < 1.6, Not required |
| | | | Right Tilted | 0.16 | 0.04 | **0.20** | ∑SAR < 1.6, Not required |
| | | | Left Cheek | **0.34** | 0.03 | **0.37** | ∑SAR < 1.6, Not required |
| | | | Left Tilted | 0.16 | 0.02 | **0.18** | ∑SAR < 1.6, Not required |
| | | Body-Worn | Front Face | 0.43 | 0.03 | **0.46** | ∑SAR < 1.6, Not required |
| | | | Rear Face | **0.56** | **0.14** | **0.70** | ∑SAR < 1.6, Not required |
| | | Hotspot | Front Face | 0.43 | 0.03 | **0.46** | ∑SAR < 1.6, Not required |
| | | | Rear Face | **0.56** | **0.14** | **0.70** | ∑SAR < 1.6, Not required |
| | | | Left Side | 0.42 | 0.03 | **0.45** | ∑SAR < 1.6, Not required |

| | | | | | | | |
|---|---|---|---|---|---|---|---|
| | | | Right Side | 0.35 | 0.01 | **0.36** | ∑SAR < 1.6, Not required |
| | | | Top Side | 0.00 | 0.03 | **0.03** | ∑SAR < 1.6, Not required |
| | | | Bottom Side | 0.12 | 0.00 | **0.12** | ∑SAR < 1.6, Not required |

| No. | Conditions (SAR1 + SAR2) | Exposure Condition | Test Position | Max. SAR1 | Max. SAR2 | SAR Summation | SPLSR Analysis |
|---|---|---|---|---|---|---|---|
| 16 | LTE 2 + WLAN (DTS) | Head | Right Cheek | **0.64** | **0.49** | **1.13** | ∑SAR < 1.6, Not required |
| | | | Right Tilted | 0.17 | 0.46 | **0.63** | ∑SAR < 1.6, Not required |
| | | | Left Cheek | 0.30 | 0.34 | **0.64** | ∑SAR < 1.6, Not required |
| | | | Left Tilted | 0.13 | 0.26 | **0.39** | ∑SAR < 1.6, Not required |
| | | Body-Worn | Front Face | 0.68 | 0.13 | **0.81** | ∑SAR < 1.6, Not required |
| | | | Rear Face | **1.13** | **0.18** | **1.31** | ∑SAR < 1.6, Not required |
| | | Hotspot | Front Face | 0.68 | 0.13 | **0.81** | ∑SAR < 1.6, Not required |
| | | | Rear Face | **1.13** | **0.18** | **1.31** | ∑SAR < 1.6, Not required |
| | | | Left Side | 0.10 | 0.10 | **0.20** | ∑SAR < 1.6, Not required |
| | | | Right Side | 0.84 | 0.04 | **0.88** | ∑SAR < 1.6, Not required |
| | | | Top Side | 0.00 | 0.12 | **0.12** | ∑SAR < 1.6, Not required |
| | | | Bottom Side | 0.96 | 0.00 | **0.96** | ∑SAR < 1.6, Not required |
| 17 | LTE 2 + WLAN (NII) | Head | Right Cheek | **0.64** | **1.11** | **1.75** | **Analyzed as below** |
| | | | Right Tilted | 0.17 | 1.10 | **1.27** | ∑SAR < 1.6, Not required |
| | | | Left Cheek | 0.30 | 1.02 | **1.32** | ∑SAR < 1.6, Not required |
| | | | Left Tilted | 0.13 | 1.00 | **1.13** | ∑SAR < 1.6, Not required |
| | | Body-Worn | Front Face | 0.68 | 0.30 | **0.98** | ∑SAR < 1.6, Not required |
| | | | Rear Face | **1.13** | **0.36** | **1.49** | ∑SAR < 1.6, Not required |
| | | Hotspot | Front Face | 0.68 | 0.29 | **0.97** | ∑SAR < 1.6, Not required |
| | | | Rear Face | **1.13** | **0.29** | **1.42** | ∑SAR < 1.6, Not required |
| | | | Left Side | 0.10 | 0.22 | **0.32** | ∑SAR < 1.6, Not required |
| | | | Right Side | 0.84 | 0.05 | **0.89** | ∑SAR < 1.6, Not required |
| | | | Top Side | 0.00 | 0.47 | **0.47** | ∑SAR < 1.6, Not required |
| | | | Bottom Side | 0.96 | 0.00 | **0.96** | ∑SAR < 1.6, Not required |
| 18 | LTE 2 + BT (DSS) | Head | Right Cheek | **0.64** | **0.23** | **0.87** | ∑SAR < 1.6, Not required |
| | | | Right Tilted | 0.17 | 0.04 | **0.21** | ∑SAR < 1.6, Not required |
| | | | Left Cheek | 0.30 | 0.03 | **0.33** | ∑SAR < 1.6, Not required |
| | | | Left Tilted | 0.13 | 0.02 | **0.15** | ∑SAR < 1.6, Not required |
| | | Body-Worn | Front Face | 0.68 | 0.03 | **0.71** | ∑SAR < 1.6, Not required |
| | | | Rear Face | **1.13** | **0.14** | **1.27** | ∑SAR < 1.6, Not required |

| | | | | | | | |
|---|---|---|---|---|---|---|---|
| | | Hotspot | Front Face | 0.68 | 0.03 | **0.71** | ∑SAR < 1.6, Not required |
| | | | Rear Face | **1.13** | **0.14** | **1.27** | ∑SAR < 1.6, Not required |
| | | | Left Side | 0.10 | 0.03 | **0.13** | ∑SAR < 1.6, Not required |
| | | | Right Side | 0.84 | 0.01 | **0.85** | ∑SAR < 1.6, Not required |
| | | | Top Side | 0.00 | 0.03 | **0.03** | ∑SAR < 1.6, Not required |
| | | | Bottom Side | 0.96 | 0.00 | **0.96** | ∑SAR < 1.6, Not required |

| No. | Conditions (SAR1 + SAR2) | Exposure Condition | Test Position | Max. SAR1 | Max. SAR2 | SAR Summation | SPLSR Analysis |
|---|---|---|---|---|---|---|---|
| **19** | **LTE 4 + WLAN (DTS)** | Head | Right Cheek | **0.54** | **0.49** | **1.03** | ∑SAR < 1.6, Not required |
| | | | Right Tilted | 0.28 | 0.46 | **0.74** | ∑SAR < 1.6, Not required |
| | | | Left Cheek | 0.29 | 0.34 | **0.63** | ∑SAR < 1.6, Not required |
| | | | Left Tilted | 0.18 | 0.26 | **0.44** | ∑SAR < 1.6, Not required |
| | | Body-Worn | Front Face | 0.57 | 0.13 | **0.70** | ∑SAR < 1.6, Not required |
| | | | Rear Face | **1.16** | **0.18** | **1.34** | ∑SAR < 1.6, Not required |
| | | Hotspot | Front Face | 0.57 | 0.13 | **0.70** | ∑SAR < 1.6, Not required |
| | | | Rear Face | **1.16** | **0.18** | **1.34** | ∑SAR < 1.6, Not required |
| | | | Left Side | 0.12 | 0.10 | **0.22** | ∑SAR < 1.6, Not required |
| | | | Right Side | 0.46 | 0.04 | **0.50** | ∑SAR < 1.6, Not required |
| | | | Top Side | 0.00 | 0.12 | **0.12** | ∑SAR < 1.6, Not required |
| | | | Bottom Side | 0.89 | 0.00 | **0.89** | ∑SAR < 1.6, Not required |
| **20** | **LTE 4 + WLAN (NII)** | Head | Right Cheek | **0.54** | **1.11** | **1.65** | **Analyzed as below** |
| | | | Right Tilted | 0.28 | 1.10 | **1.38** | ∑SAR < 1.6, Not required |
| | | | Left Cheek | 0.29 | 1.02 | **1.31** | ∑SAR < 1.6, Not required |
| | | | Left Tilted | 0.18 | 1.00 | **1.18** | ∑SAR < 1.6, Not required |
| | | Body-Worn | Front Face | 0.57 | 0.30 | **0.87** | ∑SAR < 1.6, Not required |
| | | | Rear Face | **1.16** | **0.36** | **1.52** | ∑SAR < 1.6, Not required |
| | | Hotspot | Front Face | 0.57 | 0.29 | **0.86** | ∑SAR < 1.6, Not required |
| | | | Rear Face | **1.16** | **0.29** | **1.45** | ∑SAR < 1.6, Not required |
| | | | Left Side | 0.12 | 0.22 | **0.34** | ∑SAR < 1.6, Not required |
| | | | Right Side | 0.46 | 0.05 | **0.51** | ∑SAR < 1.6, Not required |
| | | | Top Side | 0.00 | 0.47 | **0.47** | ∑SAR < 1.6, Not required |
| | | | Bottom Side | 0.89 | 0.00 | **0.89** | ∑SAR < 1.6, Not required |
| | | Extremity | Rear Face | **3.00** | **0.51** | **3.51** | ∑SAR < 4.0, Not required |

| No. | Conditions (SAR1 + SAR2) | Exposure Condition | Test Position | Max. SAR1 | Max. SAR2 | SAR Summation | SPLSR Analysis |
|---|---|---|---|---|---|---|---|
| 21 | LTE 4 + BT (DSS) | Head | Right Cheek | **0.54** | **0.23** | **0.77** | ∑SAR < 1.6, Not required |
| | | | Right Tilted | 0.28 | 0.04 | **0.32** | ∑SAR < 1.6, Not required |
| | | | Left Cheek | 0.29 | 0.03 | **0.32** | ∑SAR < 1.6, Not required |
| | | | Left Tilted | 0.18 | 0.02 | **0.20** | ∑SAR < 1.6, Not required |
| | | Body-Worn | Front Face | 0.57 | 0.03 | **0.60** | ∑SAR < 1.6, Not required |
| | | | Rear Face | **1.16** | **0.14** | **1.30** | ∑SAR < 1.6, Not required |
| | | Hotspot | Front Face | 0.57 | 0.03 | **0.60** | ∑SAR < 1.6, Not required |
| | | | Rear Face | **1.16** | **0.14** | **1.30** | ∑SAR < 1.6, Not required |
| | | | Left Side | 0.12 | 0.03 | **0.15** | ∑SAR < 1.6, Not required |
| | | | Right Side | 0.46 | 0.01 | **0.47** | ∑SAR < 1.6, Not required |
| | | | Top Side | 0.00 | 0.03 | **0.03** | ∑SAR < 1.6, Not required |
| | | | Bottom Side | 0.89 | 0.00 | **0.89** | ∑SAR < 1.6, Not required |

| No. | Conditions (SAR1 + SAR2) | Exposure Condition | Test Position | Max. SAR1 | Max. SAR2 | SAR Summation | SPLSR Analysis |
|---|---|---|---|---|---|---|---|
| 22 | LTE 5 + WLAN (DTS) | Head | Right Cheek | 0.20 | **0.49** | **0.69** | ∑SAR < 1.6, Not required |
| | | | Right Tilted | 0.10 | 0.46 | **0.56** | ∑SAR < 1.6, Not required |
| | | | Left Cheek | **0.27** | 0.34 | **0.61** | ∑SAR < 1.6, Not required |
| | | | Left Tilted | 0.16 | 0.26 | **0.42** | ∑SAR < 1.6, Not required |
| | | Body-Worn | Front Face | 0.33 | 0.13 | **0.46** | ∑SAR < 1.6, Not required |
| | | | Rear Face | **0.46** | **0.18** | **0.64** | ∑SAR < 1.6, Not required |
| | | Hotspot | Front Face | 0.33 | 0.13 | **0.46** | ∑SAR < 1.6, Not required |
| | | | Rear Face | **0.46** | **0.18** | **0.64** | ∑SAR < 1.6, Not required |
| | | | Left Side | 0.37 | 0.10 | **0.47** | ∑SAR < 1.6, Not required |
| | | | Right Side | 0.24 | 0.04 | **0.28** | ∑SAR < 1.6, Not required |
| | | | Top Side | 0.00 | 0.12 | **0.12** | ∑SAR < 1.6, Not required |
| | | | Bottom Side | 0.12 | 0.00 | **0.12** | ∑SAR < 1.6, Not required |
| 23 | LTE 5 + WLAN (NII) | Head | Right Cheek | 0.20 | **1.11** | **1.31** | ∑SAR < 1.6, Not required |
| | | | Right Tilted | 0.10 | 1.10 | **1.20** | ∑SAR < 1.6, Not required |
| | | | Left Cheek | **0.27** | 1.02 | **1.29** | ∑SAR < 1.6, Not required |
| | | | Left Tilted | 0.16 | 1.00 | **1.16** | ∑SAR < 1.6, Not required |
| | | Body-Worn | Front Face | 0.33 | 0.30 | **0.63** | ∑SAR < 1.6, Not required |
| | | | Rear Face | **0.46** | **0.36** | **0.82** | ∑SAR < 1.6, Not required |
| | | Hotspot | Front Face | 0.33 | 0.29 | **0.62** | ∑SAR < 1.6, Not required |

| | | | | | | | |
|---|---|---|---|---|---|---|---|
| | | | Rear Face | **0.46** | **0.29** | **0.75** | ∑SAR < 1.6, Not required |
| | | | Left Side | 0.37 | 0.22 | **0.59** | ∑SAR < 1.6, Not required |
| | | | Right Side | 0.24 | 0.05 | **0.29** | ∑SAR < 1.6, Not required |
| | | | Top Side | 0.00 | 0.47 | **0.47** | ∑SAR < 1.6, Not required |
| | | | Bottom Side | 0.12 | 0.00 | **0.12** | ∑SAR < 1.6, Not required |
| **24** | **LTE 5 + BT (DSS)** | Head | Right Cheek | 0.20 | **0.23** | **0.43** | ∑SAR < 1.6, Not required |
| | | | Right Tilted | 0.10 | 0.04 | **0.14** | ∑SAR < 1.6, Not required |
| | | | Left Cheek | **0.27** | 0.03 | **0.30** | ∑SAR < 1.6, Not required |
| | | | Left Tilted | 0.16 | 0.02 | **0.18** | ∑SAR < 1.6, Not required |
| | | Body-Worn | Front Face | 0.33 | 0.03 | **0.36** | ∑SAR < 1.6, Not required |
| | | | Rear Face | **0.46** | **0.14** | **0.60** | ∑SAR < 1.6, Not required |
| | | Hotspot | Front Face | 0.33 | 0.03 | **0.36** | ∑SAR < 1.6, Not required |
| | | | Rear Face | **0.46** | **0.14** | **0.60** | ∑SAR < 1.6, Not required |
| | | | Left Side | 0.37 | 0.03 | **0.40** | ∑SAR < 1.6, Not required |
| | | | Right Side | 0.24 | 0.01 | **0.25** | ∑SAR < 1.6, Not required |
| | | | Top Side | 0.00 | 0.03 | **0.03** | ∑SAR < 1.6, Not required |
| | | | Bottom Side | 0.12 | 0.00 | **0.12** | ∑SAR < 1.6, Not required |

| No. | Conditions (SAR1 + SAR2) | Exposure Condition | Test Position | Max. SAR1 | Max. SAR2 | SAR Summation | SPLSR Analysis |
|---|---|---|---|---|---|---|---|
| **25** | **LTE 7 + WLAN (DTS)** | Head | Right Cheek | 0.21 | **0.49** | **0.70** | ∑SAR < 1.6, Not required |
| | | | Right Tilted | 0.19 | 0.46 | **0.65** | ∑SAR < 1.6, Not required |
| | | | Left Cheek | **0.40** | 0.34 | **0.74** | ∑SAR < 1.6, Not required |
| | | | Left Tilted | 0.33 | 0.26 | **0.59** | ∑SAR < 1.6, Not required |
| | | Body-Worn | Front Face | 0.35 | 0.13 | **0.48** | ∑SAR < 1.6, Not required |
| | | | Rear Face | **1.24** | **0.18** | **1.42** | ∑SAR < 1.6, Not required |
| | | Hotspot | Front Face | 0.35 | 0.13 | **0.48** | ∑SAR < 1.6, Not required |
| | | | Rear Face | **1.24** | **0.18** | **1.42** | ∑SAR < 1.6, Not required |
| | | | Left Side | 0.39 | 0.10 | **0.49** | ∑SAR < 1.6, Not required |
| | | | Right Side | 0.11 | 0.04 | **0.15** | ∑SAR < 1.6, Not required |
| | | | Top Side | 0.00 | 0.12 | **0.12** | ∑SAR < 1.6, Not required |
| | | | Bottom Side | 0.83 | 0.00 | **0.83** | ∑SAR < 1.6, Not required |
| **26** | **LTE 7 + WLAN (NII)** | Head | Right Cheek | 0.21 | **1.11** | **1.32** | ∑SAR < 1.6, Not required |
| | | | Right Tilted | 0.19 | 1.10 | **1.29** | ∑SAR < 1.6, Not required |
| | | | Left Cheek | **0.40** | 1.02 | **1.42** | ∑SAR < 1.6, Not required |

| | | | | | | | |
|---|---|---|---|---|---|---|---|
| | | | Left Tilted | 0.33 | 1.00 | **1.33** | ∑SAR < 1.6, Not required |
| | | Body-Worn | Front Face | 0.35 | 0.30 | **0.65** | ∑SAR < 1.6, Not required |
| | | | Rear Face | **1.24** | **0.36** | **1.60** | ∑SAR < 1.6, Not required |
| | | Hotspot | Front Face | 0.35 | 0.29 | **0.64** | ∑SAR < 1.6, Not required |
| | | | Rear Face | **1.24** | **0.29** | **1.53** | ∑SAR < 1.6, Not required |
| | | | Left Side | 0.39 | 0.22 | **0.61** | ∑SAR < 1.6, Not required |
| | | | Right Side | 0.11 | 0.05 | **0.16** | ∑SAR < 1.6, Not required |
| | | | Top Side | 0.00 | 0.47 | **0.47** | ∑SAR < 1.6, Not required |
| | | | Bottom Side | 0.83 | 0.00 | **0.83** | ∑SAR < 1.6, Not required |
| | | Extremity | Rear Face | **1.16** | **0.51** | **1.67** | ∑SAR < 4.0, Not required |
| **27** | **LTE 7 + BT (DSS)** | Head | Right Cheek | 0.21 | **0.23** | **0.44** | ∑SAR < 1.6, Not required |
| | | | Right Tilted | 0.19 | 0.04 | **0.23** | ∑SAR < 1.6, Not required |
| | | | Left Cheek | **0.40** | 0.03 | **0.43** | ∑SAR < 1.6, Not required |
| | | | Left Tilted | 0.33 | 0.02 | **0.35** | ∑SAR < 1.6, Not required |
| | | Body-Worn | Front Face | 0.35 | 0.03 | **0.38** | ∑SAR < 1.6, Not required |
| | | | Rear Face | **1.24** | **0.14** | **1.38** | ∑SAR < 1.6, Not required |
| | | Hotspot | Front Face | 0.35 | 0.03 | **0.38** | ∑SAR < 1.6, Not required |
| | | | Rear Face | **1.24** | **0.14** | **1.38** | ∑SAR < 1.6, Not required |
| | | | Left Side | 0.39 | 0.03 | **0.42** | ∑SAR < 1.6, Not required |
| | | | Right Side | 0.11 | 0.01 | **0.12** | ∑SAR < 1.6, Not required |
| | | | Top Side | 0.00 | 0.03 | **0.03** | ∑SAR < 1.6, Not required |
| | | | Bottom Side | 0.83 | 0.00 | **0.83** | ∑SAR < 1.6, Not required |

| No. | Conditions (SAR1 + SAR2) | Exposure Condition | Test Position | Max. SAR1 | Max. SAR2 | SAR Summation | SPLSR Analysis |
|---|---|---|---|---|---|---|---|
| 28 | LTE 12 + WLAN (DTS) | Head | Right Cheek | 0.22 | **0.49** | **0.71** | ∑SAR < 1.6, Not required |
| | | | Right Tilted | 0.12 | 0.46 | **0.58** | ∑SAR < 1.6, Not required |
| | | | Left Cheek | **0.19** | 0.34 | **0.53** | ∑SAR < 1.6, Not required |
| | | | Left Tilted | 0.11 | 0.26 | **0.37** | ∑SAR < 1.6, Not required |
| | | Body-Worn | Front Face | 0.27 | 0.13 | **0.40** | ∑SAR < 1.6, Not required |
| | | | Rear Face | **0.45** | **0.18** | **0.63** | ∑SAR < 1.6, Not required |
| | | Hotspot | Front Face | 0.27 | 0.13 | **0.40** | ∑SAR < 1.6, Not required |
| | | | Rear Face | **0.45** | **0.18** | **0.63** | ∑SAR < 1.6, Not required |
| | | | Left Side | 0.32 | 0.10 | **0.42** | ∑SAR < 1.6, Not required |
| | | | Right Side | 0.27 | 0.04 | **0.31** | ∑SAR < 1.6, Not required |
| | | | Top Side | 0.00 | 0.12 | **0.12** | ∑SAR < 1.6, Not required |
| | | | Bottom Side | 0.04 | 0.00 | **0.04** | ∑SAR < 1.6, Not required |
| 29 | LTE 12 + WLAN (NII) | Head | Right Cheek | 0.22 | **1.11** | **1.33** | ∑SAR < 1.6, Not required |
| | | | Right Tilted | 0.12 | 1.10 | **1.22** | ∑SAR < 1.6, Not required |
| | | | Left Cheek | **0.19** | 1.02 | **1.21** | ∑SAR < 1.6, Not required |
| | | | Left Tilted | 0.11 | 1.00 | **1.11** | ∑SAR < 1.6, Not required |
| | | Body-Worn | Front Face | 0.27 | 0.30 | **0.57** | ∑SAR < 1.6, Not required |
| | | | Rear Face | **0.45** | **0.36** | **0.81** | ∑SAR < 1.6, Not required |
| | | Hotspot | Front Face | 0.27 | 0.29 | **0.56** | ∑SAR < 1.6, Not required |
| | | | Rear Face | **0.45** | **0.29** | **0.74** | ∑SAR < 1.6, Not required |
| | | | Left Side | 0.32 | 0.22 | **0.54** | ∑SAR < 1.6, Not required |
| | | | Right Side | 0.27 | 0.05 | **0.32** | ∑SAR < 1.6, Not required |
| | | | Top Side | 0.00 | 0.47 | **0.47** | ∑SAR < 1.6, Not required |
| | | | Bottom Side | 0.04 | 0.00 | **0.04** | ∑SAR < 1.6, Not required |

| No. | Conditions (SAR1 + SAR2) | Exposure Condition | Test Position | Max. SAR1 | Max. SAR2 | SAR Summation | SPLSR Analysis |
|---|---|---|---|---|---|---|---|
| 30 | LTE 12 + BT (DSS) | Head | Right Cheek | 0.22 | **0.23** | **0.45** | ∑SAR < 1.6, Not required |
| | | | Right Tilted | 0.12 | 0.04 | **0.16** | ∑SAR < 1.6, Not required |
| | | | Left Cheek | **0.19** | 0.03 | **0.22** | ∑SAR < 1.6, Not required |
| | | | Left Tilted | 0.11 | 0.02 | **0.13** | ∑SAR < 1.6, Not required |
| | | Body-Worn | Front Face | 0.27 | 0.03 | **0.30** | ∑SAR < 1.6, Not required |
| | | | Rear Face | **0.45** | **0.14** | **0.59** | ∑SAR < 1.6, Not required |
| | | Hotspot | Front Face | 0.27 | 0.03 | **0.30** | ∑SAR < 1.6, Not required |
| | | | Rear Face | **0.45** | **0.14** | **0.59** | ∑SAR < 1.6, Not required |
| | | | Left Side | 0.32 | 0.03 | **0.35** | ∑SAR < 1.6, Not required |
| | | | Right Side | 0.27 | 0.01 | **0.28** | ∑SAR < 1.6, Not required |
| | | | Top Side | 0.00 | 0.03 | **0.03** | ∑SAR < 1.6, Not required |
| | | | Bottom Side | 0.04 | 0.00 | **0.04** | ∑SAR < 1.6, Not required |

| No. | Conditions (SAR1 + SAR2) | Exposure Condition | Test Position | Max. SAR1 | Max. SAR2 | SAR Summation | SPLSR Analysis |
|---|---|---|---|---|---|---|---|
| 31 | LTE 13 + WLAN (DTS) | Head | Right Cheek | 0.15 | **0.49** | **0.64** | ∑SAR < 1.6, Not required |
| | | | Right Tilted | 0.07 | 0.46 | **0.53** | ∑SAR < 1.6, Not required |
| | | | Left Cheek | **0.22** | 0.34 | **0.56** | ∑SAR < 1.6, Not required |
| | | | Left Tilted | 0.11 | 0.26 | **0.37** | ∑SAR < 1.6, Not required |
| | | Body-Worn | Front Face | 0.31 | 0.13 | **0.44** | ∑SAR < 1.6, Not required |
| | | | Rear Face | **0.48** | **0.18** | **0.66** | ∑SAR < 1.6, Not required |
| | | Hotspot | Front Face | 0.31 | 0.13 | **0.60** | ∑SAR < 1.6, Not required |
| | | | Rear Face | **0.48** | **0.18** | **0.74** | ∑SAR < 1.6, Not required |
| | | | Left Side | 0.31 | 0.10 | **0.53** | ∑SAR < 1.6, Not required |
| | | | Right Side | 0.24 | 0.04 | **0.29** | ∑SAR < 1.6, Not required |
| | | | Top Side | 0.00 | 0.12 | **0.47** | ∑SAR < 1.6, Not required |
| | | | Bottom Side | 0.07 | 0.00 | **0.07** | ∑SAR < 1.6, Not required |
| 32 | LTE 13 + WLAN (NII) | Head | Right Cheek | 0.15 | **1.11** | **1.26** | ∑SAR < 1.6, Not required |
| | | | Right Tilted | 0.07 | 1.10 | **1.17** | ∑SAR < 1.6, Not required |
| | | | Left Cheek | **0.22** | 1.02 | **1.24** | ∑SAR < 1.6, Not required |
| | | | Left Tilted | 0.11 | 1.00 | **1.11** | ∑SAR < 1.6, Not required |
| | | Body-Worn | Front Face | 0.31 | 0.30 | **0.61** | ∑SAR < 1.6, Not required |
| | | | Rear Face | **0.48** | **0.36** | **0.84** | ∑SAR < 1.6, Not required |
| | | Hotspot | Front Face | 0.31 | 0.29 | **0.60** | ∑SAR < 1.6, Not required |

| | | | | | | | |
|---|---|---|---|---|---|---|---|
| | | | Rear Face | **0.48** | **0.29** | **0.77** | ∑SAR < 1.6, Not required |
| | | | Left Side | 0.31 | 0.22 | **0.53** | ∑SAR < 1.6, Not required |
| | | | Right Side | 0.24 | 0.05 | **0.29** | ∑SAR < 1.6, Not required |
| | | | Top Side | 0.00 | 0.47 | **0.47** | ∑SAR < 1.6, Not required |
| | | | Bottom Side | 0.07 | 0.00 | **0.07** | ∑SAR < 1.6, Not required |
| **33** | **LTE 13 + BT (DSS)** | Head | Right Cheek | 0.15 | **0.23** | **0.38** | ∑SAR < 1.6, Not required |
| | | | Right Tilted | 0.07 | 0.04 | **0.11** | ∑SAR < 1.6, Not required |
| | | | Left Cheek | **0.22** | 0.03 | **0.25** | ∑SAR < 1.6, Not required |
| | | | Left Tilted | 0.11 | 0.02 | **0.13** | ∑SAR < 1.6, Not required |
| | | Body-Worn | Front Face | 0.31 | 0.03 | **0.34** | ∑SAR < 1.6, Not required |
| | | | Rear Face | **0.48** | **0.14** | **0.62** | ∑SAR < 1.6, Not required |
| | | Hotspot | Front Face | 0.31 | 0.03 | **0.34** | ∑SAR < 1.6, Not required |
| | | | Rear Face | **0.48** | **0.14** | **0.62** | ∑SAR < 1.6, Not required |
| | | | Left Side | 0.31 | 0.03 | **0.34** | ∑SAR < 1.6, Not required |
| | | | Right Side | 0.24 | 0.01 | **0.25** | ∑SAR < 1.6, Not required |
| | | | Top Side | 0.00 | 0.03 | **0.03** | ∑SAR < 1.6, Not required |
| | | | Bottom Side | 0.07 | 0.00 | **0.07** | ∑SAR < 1.6, Not required |

| No. | Conditions (SAR1 + SAR2) | Exposure Condition | Test Position | Max. SAR1 | Max. SAR2 | SAR Summation | SPLSR Analysis |
|---|---|---|---|---|---|---|---|
| **34** | **LTE 14 + WLAN (DTS)** | Head | Right Cheek | 0.16 | **0.49** | **0.65** | ∑SAR < 1.6, Not required |
| | | | Right Tilted | 0.08 | 0.46 | **0.54** | ∑SAR < 1.6, Not required |
| | | | Left Cheek | **0.20** | 0.34 | **0.54** | ∑SAR < 1.6, Not required |
| | | | Left Tilted | 0.13 | 0.26 | **0.39** | ∑SAR < 1.6, Not required |
| | | Body-Worn | Front Face | 0.31 | 0.13 | **0.44** | ∑SAR < 1.6, Not required |
| | | | Rear Face | **0.44** | **0.18** | **0.62** | ∑SAR < 1.6, Not required |
| | | Hotspot | Front Face | 0.31 | 0.13 | **0.44** | ∑SAR < 1.6, Not required |
| | | | Rear Face | **0.44** | **0.18** | **0.62** | ∑SAR < 1.6, Not required |
| | | | Left Side | 0.32 | 0.10 | **0.42** | ∑SAR < 1.6, Not required |
| | | | Right Side | 0.26 | 0.04 | **0.30** | ∑SAR < 1.6, Not required |
| | | | Top Side | 0.00 | 0.12 | **0.12** | ∑SAR < 1.6, Not required |
| | | | Bottom Side | 0.07 | 0.00 | **0.07** | ∑SAR < 1.6, Not required |
| **35** | **LTE 14 + WLAN (NII)** | Head | Right Cheek | 0.16 | **1.11** | **1.27** | ∑SAR < 1.6, Not required |
| | | | Right Tilted | 0.08 | 1.10 | **1.18** | ∑SAR < 1.6, Not required |
| | | | Left Cheek | **0.20** | 1.02 | **1.22** | ∑SAR < 1.6, Not required |
| | | | Left Tilted | 0.13 | 1.00 | **1.13** | ∑SAR < 1.6, Not required |

| | | | | | | | |
|---|---|---|---|---|---|---|---|
| | | Body-Worn | Front Face | 0.31 | 0.30 | **0.61** | ∑SAR < 1.6, Not required |
| | | | Rear Face | **0.44** | **0.36** | **0.80** | ∑SAR < 1.6, Not required |
| | | Hotspot | Front Face | 0.31 | 0.29 | **0.60** | ∑SAR < 1.6, Not required |
| | | | Rear Face | **0.44** | **0.29** | **0.73** | ∑SAR < 1.6, Not required |
| | | | Left Side | 0.32 | 0.22 | **0.54** | ∑SAR < 1.6, Not required |
| | | | Right Side | 0.26 | 0.05 | **0.31** | ∑SAR < 1.6, Not required |
| | | | Top Side | 0.00 | 0.47 | **0.47** | ∑SAR < 1.6, Not required |
| | | | Bottom Side | 0.07 | 0.00 | **0.07** | ∑SAR < 1.6, Not required |
| **36** | **LTE 14 + BT (DSS)** | Head | Right Cheek | 0.16 | **0.23** | **0.39** | ∑SAR < 1.6, Not required |
| | | | Right Tilted | 0.08 | 0.04 | **0.12** | ∑SAR < 1.6, Not required |
| | | | Left Cheek | **0.20** | 0.03 | **0.23** | ∑SAR < 1.6, Not required |
| | | | Left Tilted | 0.13 | 0.02 | **0.15** | ∑SAR < 1.6, Not required |
| | | Body-Worn | Front Face | 0.31 | 0.03 | **0.34** | ∑SAR < 1.6, Not required |
| | | | Rear Face | **0.44** | **0.14** | **0.58** | ∑SAR < 1.6, Not required |
| | | Hotspot | Front Face | 0.31 | 0.03 | **0.34** | ∑SAR < 1.6, Not required |
| | | | Rear Face | **0.44** | **0.14** | **0.58** | ∑SAR < 1.6, Not required |
| | | | Left Side | 0.32 | 0.03 | **0.35** | ∑SAR < 1.6, Not required |
| | | | Right Side | 0.26 | 0.01 | **0.27** | ∑SAR < 1.6, Not required |
| | | | Top Side | 0.00 | 0.03 | **0.03** | ∑SAR < 1.6, Not required |
| | | | Bottom Side | 0.07 | 0.00 | **0.07** | ∑SAR < 1.6, Not required |

| No. | Conditions (SAR1 + SAR2) | Exposure Condition | Test Position | Max. SAR1 | Max. SAR2 | SAR Summation | SPLSR Analysis |
|---|---|---|---|---|---|---|---|
| **37** | **LTE 25 + WLAN (DTS)** | Head | Right Cheek | **0.60** | **0.49** | **1.09** | ∑SAR < 1.6, Not required |
| | | | Right Tilted | 0.17 | 0.46 | **0.63** | ∑SAR < 1.6, Not required |
| | | | Left Cheek | 0.29 | 0.34 | **0.63** | ∑SAR < 1.6, Not required |
| | | | Left Tilted | 0.15 | 0.26 | **0.41** | ∑SAR < 1.6, Not required |
| | | Body-Worn | Front Face | 0.62 | 0.13 | **0.75** | ∑SAR < 1.6, Not required |
| | | | Rear Face | **1.17** | **0.18** | **1.35** | ∑SAR < 1.6, Not required |
| | | Hotspot | Front Face | 0.62 | 0.13 | **0.75** | ∑SAR < 1.6, Not required |
| | | | Rear Face | **1.17** | **0.18** | **1.35** | ∑SAR < 1.6, Not required |
| | | | Left Side | 0.13 | 0.10 | **0.23** | ∑SAR < 1.6, Not required |
| | | | Right Side | 0.50 | 0.04 | **0.54** | ∑SAR < 1.6, Not required |
| | | | Top Side | 0.00 | 0.12 | **0.12** | ∑SAR < 1.6, Not required |
| | | | Bottom Side | 0.96 | 0.00 | **0.96** | ∑SAR < 1.6, Not required |

| No. | Conditions (SAR1 + SAR2) | Exposure Condition | Test Position | Max. SAR1 | Max. SAR2 | SAR Summation | SPLSR Analysis |
|---|---|---|---|---|---|---|---|
| 38 | LTE 25 + WLAN (NII) | Head | Right Cheek | **0.60** | **1.11** | **1.71** | **Analyzed as below** |
| | | | Right Tilted | 0.17 | 1.10 | **1.27** | ∑SAR < 1.6, Not required |
| | | | Left Cheek | 0.29 | 1.02 | **1.31** | ∑SAR < 1.6, Not required |
| | | | Left Tilted | 0.15 | 1.00 | **1.15** | ∑SAR < 1.6, Not required |
| | | Body-Worn | Front Face | 0.62 | 0.30 | **0.92** | ∑SAR < 1.6, Not required |
| | | | Rear Face | **1.17** | **0.36** | **1.53** | ∑SAR < 1.6, Not required |
| | | Hotspot | Front Face | 0.62 | 0.29 | **0.91** | ∑SAR < 1.6, Not required |
| | | | Rear Face | **1.17** | **0.29** | **1.46** | ∑SAR < 1.6, Not required |
| | | | Left Side | 0.13 | 0.22 | **0.35** | ∑SAR < 1.6, Not required |
| | | | Right Side | 0.50 | 0.05 | **0.55** | ∑SAR < 1.6, Not required |
| | | | Top Side | 0.00 | 0.47 | **0.47** | ∑SAR < 1.6, Not required |
| | | | Bottom Side | 0.96 | 0.00 | **0.96** | ∑SAR < 1.6, Not required |
| | | Extremity | Rear Face | **3.15** | **0.51** | **3.66** | ∑SAR < 4.0, Not required |
| 39 | LTE 25 + BT (DSS) | Head | Right Cheek | **0.60** | **0.23** | **0.83** | ∑SAR < 1.6, Not required |
| | | | Right Tilted | 0.17 | 0.04 | **0.21** | ∑SAR < 1.6, Not required |
| | | | Left Cheek | 0.29 | 0.03 | **0.32** | ∑SAR < 1.6, Not required |
| | | | Left Tilted | 0.15 | 0.02 | **0.17** | ∑SAR < 1.6, Not required |
| | | Body-Worn | Front Face | 0.62 | 0.03 | **0.65** | ∑SAR < 1.6, Not required |
| | | | Rear Face | **1.17** | **0.14** | **1.31** | ∑SAR < 1.6, Not required |
| | | Hotspot | Front Face | 0.62 | 0.03 | **0.65** | ∑SAR < 1.6, Not required |
| | | | Rear Face | **1.17** | **0.14** | **1.31** | ∑SAR < 1.6, Not required |
| | | | Left Side | 0.13 | 0.03 | **0.16** | ∑SAR < 1.6, Not required |
| | | | Right Side | 0.50 | 0.01 | **0.51** | ∑SAR < 1.6, Not required |
| | | | Top Side | 0.00 | 0.03 | **0.03** | ∑SAR < 1.6, Not required |
| | | | Bottom Side | 0.96 | 0.00 | **0.96** | ∑SAR < 1.6, Not required |

| No. | Conditions (SAR1 + SAR2) | Exposure Condition | Test Position | Max. SAR1 | Max. SAR2 | SAR Summation | SPLSR Analysis |
|---|---|---|---|---|---|---|---|
| 40 | LTE 26 + WLAN (DTS) | Head | Right Cheek | 0.22 | **0.49** | **0.71** | ∑SAR < 1.6, Not required |
| | | | Right Tilted | 0.10 | 0.46 | **0.56** | ∑SAR < 1.6, Not required |
| | | | Left Cheek | **0.26** | 0.34 | **0.60** | ∑SAR < 1.6, Not required |
| | | | Left Tilted | 0.17 | 0.26 | **0.43** | ∑SAR < 1.6, Not required |
| | | Body-Worn | Front Face | 0.36 | 0.13 | **0.49** | ∑SAR < 1.6, Not required |
| | | | Rear Face | **0.45** | **0.18** | **0.63** | ∑SAR < 1.6, Not required |
| | | Hotspot | Front Face | 0.36 | 0.13 | **0.49** | ∑SAR < 1.6, Not required |
| | | | Rear Face | **0.45** | **0.18** | **0.63** | ∑SAR < 1.6, Not required |
| | | | Left Side | 0.40 | 0.10 | **0.50** | ∑SAR < 1.6, Not required |
| | | | Right Side | 0.27 | 0.04 | **0.31** | ∑SAR < 1.6, Not required |
| | | | Top Side | 0.00 | 0.12 | **0.12** | ∑SAR < 1.6, Not required |
| | | | Bottom Side | 0.12 | 0.00 | **0.12** | ∑SAR < 1.6, Not required |
| 41 | LTE 26 + WLAN (NII) | Head | Right Cheek | 0.22 | **1.11** | **1.33** | ∑SAR < 1.6, Not required |
| | | | Right Tilted | 0.10 | 1.10 | **1.20** | ∑SAR < 1.6, Not required |
| | | | Left Cheek | **0.26** | 1.02 | **1.28** | ∑SAR < 1.6, Not required |
| | | | Left Tilted | 0.17 | 1.00 | **1.17** | ∑SAR < 1.6, Not required |
| | | Body-Worn | Front Face | 0.36 | 0.30 | **0.66** | ∑SAR < 1.6, Not required |
| | | | Rear Face | **0.45** | **0.36** | **0.81** | ∑SAR < 1.6, Not required |
| | | Hotspot | Front Face | 0.36 | 0.29 | **0.65** | ∑SAR < 1.6, Not required |
| | | | Rear Face | **0.45** | **0.29** | **0.74** | ∑SAR < 1.6, Not required |
| | | | Left Side | 0.40 | 0.22 | **0.62** | ∑SAR < 1.6, Not required |
| | | | Right Side | 0.27 | 0.05 | **0.32** | ∑SAR < 1.6, Not required |
| | | | Top Side | 0.00 | 0.47 | **0.47** | ∑SAR < 1.6, Not required |
| | | | Bottom Side | 0.12 | 0.00 | **0.12** | ∑SAR < 1.6, Not required |
| 42 | LTE 26 + BT (DSS) | Head | Right Cheek | 0.22 | **0.23** | **0.45** | ∑SAR < 1.6, Not required |
| | | | Right Tilted | 0.10 | 0.04 | **0.14** | ∑SAR < 1.6, Not required |
| | | | Left Cheek | **0.26** | 0.03 | **0.29** | ∑SAR < 1.6, Not required |
| | | | Left Tilted | 0.17 | 0.02 | **0.19** | ∑SAR < 1.6, Not required |
| | | Body-Worn | Front Face | 0.36 | 0.03 | **0.39** | ∑SAR < 1.6, Not required |
| | | | Rear Face | **0.45** | **0.14** | **0.59** | ∑SAR < 1.6, Not required |
| | | Hotspot | Front Face | 0.36 | 0.03 | **0.39** | ∑SAR < 1.6, Not required |
| | | | Rear Face | **0.45** | **0.14** | **0.59** | ∑SAR < 1.6, Not required |
| | | | Left Side | 0.40 | 0.03 | **0.43** | ∑SAR < 1.6, Not required |

| | | | | | | | |
|---|---|---|---|---|---|---|---|
| | | | Right Side | 0.27 | 0.01 | **0.28** | ∑SAR < 1.6, Not required |
| | | | Top Side | 0.00 | 0.03 | **0.03** | ∑SAR < 1.6, Not required |
| | | | Bottom Side | 0.12 | 0.00 | **0.12** | ∑SAR < 1.6, Not required |

| No. | Conditions (SAR1 + SAR2) | Exposure Condition | Test Position | Max. SAR1 | Max. SAR2 | SAR Summation | SPLSR Analysis |
|---|---|---|---|---|---|---|---|
| 43 | LTE 30 + WLAN (DTS) | Head | Right Cheek | 0.20 | **0.49** | **0.69** | ∑SAR < 1.6, Not required |
| | | | Right Tilted | 0.16 | 0.46 | **0.62** | ∑SAR < 1.6, Not required |
| | | | Left Cheek | **0.38** | 0.34 | **0.72** | ∑SAR < 1.6, Not required |
| | | | Left Tilted | 0.09 | 0.26 | **0.35** | ∑SAR < 1.6, Not required |
| | | Body-Worn | Front Face | 0.37 | 0.13 | **0.50** | ∑SAR < 1.6, Not required |
| | | | Rear Face | **0.38** | **0.18** | **0.56** | ∑SAR < 1.6, Not required |
| | | Hotspot | Front Face | 0.37 | 0.13 | **0.50** | ∑SAR < 1.6, Not required |
| | | | Rear Face | 0.46 | **0.18** | **0.64** | ∑SAR < 1.6, Not required |
| | | | Left Side | 0.31 | 0.10 | **0.41** | ∑SAR < 1.6, Not required |
| | | | Right Side | 0.05 | 0.04 | **0.09** | ∑SAR < 1.6, Not required |
| | | | Top Side | 0.00 | 0.12 | **0.12** | ∑SAR < 1.6, Not required |
| | | | Bottom Side | **0.36** | 0.00 | **0.36** | ∑SAR < 1.6, Not required |
| 44 | LTE 30 + WLAN (NII) | Head | Right Cheek | 0.20 | **1.11** | **1.31** | ∑SAR < 1.6, Not required |
| | | | Right Tilted | 0.16 | 1.10 | **1.26** | ∑SAR < 1.6, Not required |
| | | | Left Cheek | **0.38** | 1.02 | **1.40** | ∑SAR < 1.6, Not required |
| | | | Left Tilted | 0.09 | 1.00 | **1.09** | ∑SAR < 1.6, Not required |
| | | Body-Worn | Front Face | 0.37 | 0.30 | **0.67** | ∑SAR < 1.6, Not required |
| | | | Rear Face | **0.38** | **0.36** | **0.74** | ∑SAR < 1.6, Not required |
| | | Hotspot | Front Face | 0.37 | 0.29 | **0.66** | ∑SAR < 1.6, Not required |
| | | | Rear Face | 0.46 | **0.29** | **0.75** | ∑SAR < 1.6, Not required |
| | | | Left Side | 0.31 | 0.22 | **0.53** | ∑SAR < 1.6, Not required |
| | | | Right Side | 0.05 | 0.05 | **0.10** | ∑SAR < 1.6, Not required |
| | | | Top Side | 0.00 | 0.47 | **0.47** | ∑SAR < 1.6, Not required |
| | | | Bottom Side | **0.36** | 0.00 | **0.36** | ∑SAR < 1.6, Not required |
| 45 | LTE 30 + BT (DSS) | Head | Right Cheek | 0.20 | **0.23** | **0.43** | ∑SAR < 1.6, Not required |
| | | | Right Tilted | 0.16 | 0.04 | **0.20** | ∑SAR < 1.6, Not required |
| | | | Left Cheek | **0.38** | 0.03 | **0.41** | ∑SAR < 1.6, Not required |
| | | | Left Tilted | 0.09 | 0.02 | **0.11** | ∑SAR < 1.6, Not required |
| | | Body-Worn | Front Face | 0.37 | 0.03 | **0.40** | ∑SAR < 1.6, Not required |
| | | | Rear Face | **0.38** | **0.14** | **0.52** | ∑SAR < 1.6, Not required |

| | | | | | | | |
|---|---|---|---|---|---|---|---|
| | | Hotspot | Front Face | 0.37 | 0.03 | **0.40** | ∑SAR < 1.6, Not required |
| | | | Rear Face | 0.46 | **0.14** | **0.60** | ∑SAR < 1.6, Not required |
| | | | Left Side | 0.31 | 0.03 | **0.34** | ∑SAR < 1.6, Not required |
| | | | Right Side | 0.05 | 0.01 | **0.06** | ∑SAR < 1.6, Not required |
| | | | Top Side | 0.00 | 0.03 | **0.03** | ∑SAR < 1.6, Not required |
| | | | Bottom Side | **0.36** | 0.00 | **0.36** | ∑SAR < 1.6, Not required |

| No. | Conditions (SAR1 + SAR2) | Exposure Condition | Test Position | Max. SAR1 | Max. SAR2 | SAR Summation | SPLSR Analysis |
|---|---|---|---|---|---|---|---|
| **46** | **LTE 38 + WLAN (DTS)** | Head | Right Cheek | 0.11 | **0.49** | **0.60** | ∑SAR < 1.6, Not required |
| | | | Right Tilted | 0.10 | 0.46 | **0.56** | ∑SAR < 1.6, Not required |
| | | | Left Cheek | **0.28** | 0.34 | **0.62** | ∑SAR < 1.6, Not required |
| | | | Left Tilted | 0.06 | 0.26 | **0.32** | ∑SAR < 1.6, Not required |
| | | Body-Worn | Front Face | 0.22 | 0.13 | **0.35** | ∑SAR < 1.6, Not required |
| | | | Rear Face | **0.67** | **0.18** | **0.85** | ∑SAR < 1.6, Not required |
| | | Hotspot | Front Face | 0.22 | 0.13 | **0.35** | ∑SAR < 1.6, Not required |
| | | | Rear Face | **0.67** | **0.18** | **0.85** | ∑SAR < 1.6, Not required |
| | | | Left Side | 0.18 | 0.10 | **0.28** | ∑SAR < 1.6, Not required |
| | | | Right Side | 0.05 | 0.04 | **0.09** | ∑SAR < 1.6, Not required |
| | | | Top Side | 0.00 | 0.12 | **0.12** | ∑SAR < 1.6, Not required |
| | | | Bottom Side | 0.46 | 0.00 | **0.46** | ∑SAR < 1.6, Not required |
| **47** | **LTE 38 + WLAN (NII)** | Head | Right Cheek | 0.11 | **1.11** | **1.22** | ∑SAR < 1.6, Not required |
| | | | Right Tilted | 0.10 | 1.10 | **1.20** | ∑SAR < 1.6, Not required |
| | | | Left Cheek | **0.28** | 1.02 | **1.30** | ∑SAR < 1.6, Not required |
| | | | Left Tilted | 0.06 | 1.00 | **1.06** | ∑SAR < 1.6, Not required |
| | | Body-Worn | Front Face | 0.22 | 0.30 | **0.52** | ∑SAR < 1.6, Not required |
| | | | Rear Face | **0.67** | **0.36** | **1.03** | ∑SAR < 1.6, Not required |
| | | Hotspot | Front Face | 0.22 | 0.29 | **0.51** | ∑SAR < 1.6, Not required |
| | | | Rear Face | **0.67** | **0.29** | **0.96** | ∑SAR < 1.6, Not required |
| | | | Left Side | 0.18 | 0.22 | **0.40** | ∑SAR < 1.6, Not required |
| | | | Right Side | 0.05 | 0.05 | **0.10** | ∑SAR < 1.6, Not required |
| | | | Top Side | 0.00 | 0.47 | **0.47** | ∑SAR < 1.6, Not required |
| | | | Bottom Side | 0.46 | 0.00 | **0.46** | ∑SAR < 1.6, Not required |

| No. | Conditions (SAR1 + SAR2) | Exposure Condition | Test Position | Max. SAR1 | Max. SAR2 | SAR Summation | SPLSR Analysis |
|---|---|---|---|---|---|---|---|
| 48 | LTE 38 + BT (DSS) | Head | Right Cheek | 0.11 | **0.23** | **0.34** | ∑SAR < 1.6, Not required |
| | | | Right Tilted | 0.10 | 0.04 | **0.14** | ∑SAR < 1.6, Not required |
| | | | Left Cheek | **0.28** | 0.03 | **0.31** | ∑SAR < 1.6, Not required |
| | | | Left Tilted | 0.06 | 0.02 | **0.08** | ∑SAR < 1.6, Not required |
| | | Body-Worn | Front Face | 0.22 | 0.03 | **0.25** | ∑SAR < 1.6, Not required |
| | | | Rear Face | **0.67** | **0.14** | **0.81** | ∑SAR < 1.6, Not required |
| | | Hotspot | Front Face | 0.22 | 0.03 | **0.25** | ∑SAR < 1.6, Not required |
| | | | Rear Face | **0.67** | **0.14** | **0.81** | ∑SAR < 1.6, Not required |
| | | | Left Side | 0.18 | 0.03 | **0.21** | ∑SAR < 1.6, Not required |
| | | | Right Side | 0.05 | 0.01 | **0.06** | ∑SAR < 1.6, Not required |
| | | | Top Side | 0.00 | 0.03 | **0.03** | ∑SAR < 1.6, Not required |
| | | | Bottom Side | 0.46 | 0.00 | **0.46** | ∑SAR < 1.6, Not required |

| No. | Conditions (SAR1 + SAR2) | Exposure Condition | Test Position | Max. SAR1 | Max. SAR2 | SAR Summation | SPLSR Analysis |
|---|---|---|---|---|---|---|---|
| 49 | LTE 40 + WLAN (DTS) | Head | Right Cheek | 0.16 | **0.49** | **0.65** | ∑SAR < 1.6, Not required |
| | | | Right Tilted | 0.13 | 0.46 | **0.59** | ∑SAR < 1.6, Not required |
| | | | Left Cheek | **0.23** | 0.34 | **0.57** | ∑SAR < 1.6, Not required |
| | | | Left Tilted | 0.07 | 0.26 | **0.33** | ∑SAR < 1.6, Not required |
| | | Body-Worn | Front Face | 0.29 | 0.13 | **0.42** | ∑SAR < 1.6, Not required |
| | | | Rear Face | **0.35** | **0.18** | **0.53** | ∑SAR < 1.6, Not required |
| | | Hotspot | Front Face | 0.29 | 0.13 | **0.42** | ∑SAR < 1.6, Not required |
| | | | Rear Face | 0.37 | **0.18** | **0.55** | ∑SAR < 1.6, Not required |
| | | | Left Side | 0.25 | 0.10 | **0.35** | ∑SAR < 1.6, Not required |
| | | | Right Side | 0.04 | 0.04 | **0.08** | ∑SAR < 1.6, Not required |
| | | | Top Side | 0.00 | 0.12 | **0.12** | ∑SAR < 1.6, Not required |
| | | | Bottom Side | **0.36** | 0.00 | **0.36** | ∑SAR < 1.6, Not required |
| 50 | LTE 40 + WLAN (NII) | Head | Right Cheek | 0.16 | **1.11** | **1.27** | ∑SAR < 1.6, Not required |
| | | | Right Tilted | 0.13 | 1.10 | **1.23** | ∑SAR < 1.6, Not required |
| | | | Left Cheek | **0.23** | 1.02 | **1.25** | ∑SAR < 1.6, Not required |
| | | | Left Tilted | 0.07 | 1.00 | **1.07** | ∑SAR < 1.6, Not required |
| | | Body-Worn | Front Face | 0.29 | 0.30 | **0.59** | ∑SAR < 1.6, Not required |
| | | | Rear Face | **0.35** | **0.36** | **0.71** | ∑SAR < 1.6, Not required |
| | | Hotspot | Front Face | 0.29 | 0.29 | **0.58** | ∑SAR < 1.6, Not required |

| | | | | | | | |
|---|---|---|---|---|---|---|---|
| | | | Rear Face | 0.37 | **0.29** | **0.66** | ∑SAR < 1.6, Not required |
| | | | Left Side | 0.25 | 0.22 | **0.47** | ∑SAR < 1.6, Not required |
| | | | Right Side | 0.04 | 0.05 | **0.09** | ∑SAR < 1.6, Not required |
| | | | Top Side | 0.00 | 0.47 | **0.47** | ∑SAR < 1.6, Not required |
| | | | Bottom Side | **0.36** | 0.00 | **0.36** | ∑SAR < 1.6, Not required |
| **51** | **LTE 40 + BT (DSS)** | Head | Right Cheek | 0.16 | **0.23** | **1.25** | ∑SAR < 1.6, Not required |
| | | | Right Tilted | 0.13 | 0.04 | **1.23** | ∑SAR < 1.6, Not required |
| | | | Left Cheek | **0.23** | 0.03 | **1.25** | ∑SAR < 1.6, Not required |
| | | | Left Tilted | 0.07 | 0.02 | **1.07** | ∑SAR < 1.6, Not required |
| | | Body-Worn | Front Face | 0.29 | 0.03 | **0.46** | ∑SAR < 1.6, Not required |
| | | | Rear Face | **0.35** | **0.14** | **0.64** | ∑SAR < 1.6, Not required |
| | | Hotspot | Front Face | 0.29 | 0.03 | **0.46** | ∑SAR < 1.6, Not required |
| | | | Rear Face | 0.37 | **0.14** | **0.66** | ∑SAR < 1.6, Not required |
| | | | Left Side | 0.25 | 0.03 | **0.38** | ∑SAR < 1.6, Not required |
| | | | Right Side | 0.04 | 0.01 | **0.07** | ∑SAR < 1.6, Not required |
| | | | Top Side | 0.00 | 0.03 | **0.28** | ∑SAR < 1.6, Not required |
| | | | Bottom Side | **0.36** | 0.00 | **0.36** | ∑SAR < 1.6, Not required |

| No. | Conditions (SAR1 + SAR2) | Exposure Condition | Test Position | Max. SAR1 | Max. SAR2 | SAR Summation | SPLSR Analysis |
|---|---|---|---|---|---|---|---|
| **52** | **LTE 41 + WLAN (DTS)** | Head | Right Cheek | 0.10 | **0.49** | **0.59** | ∑SAR < 1.6, Not required |
| | | | Right Tilted | 0.09 | 0.46 | **0.55** | ∑SAR < 1.6, Not required |
| | | | Left Cheek | **0.20** | 0.34 | **0.54** | ∑SAR < 1.6, Not required |
| | | | Left Tilted | 0.05 | 0.26 | **0.31** | ∑SAR < 1.6, Not required |
| | | Body-Worn | Front Face | 0.21 | 0.13 | **0.34** | ∑SAR < 1.6, Not required |
| | | | Rear Face | **0.52** | **0.18** | **0.70** | ∑SAR < 1.6, Not required |
| | | Hotspot | Front Face | 0.21 | 0.13 | **0.34** | ∑SAR < 1.6, Not required |
| | | | Rear Face | **0.52** | **0.18** | **0.70** | ∑SAR < 1.6, Not required |
| | | | Left Side | 0.18 | 0.10 | **0.28** | ∑SAR < 1.6, Not required |
| | | | Right Side | 0.05 | 0.04 | **0.09** | ∑SAR < 1.6, Not required |
| | | | Top Side | 0.00 | 0.12 | **0.12** | ∑SAR < 1.6, Not required |
| | | | Bottom Side | 0.44 | 0.00 | **0.44** | ∑SAR < 1.6, Not required |
| **53** | **LTE 41 + WLAN (NII)** | Head | Right Cheek | 0.10 | **1.11** | **1.21** | ∑SAR < 1.6, Not required |
| | | | Right Tilted | 0.09 | 1.10 | **1.19** | ∑SAR < 1.6, Not required |
| | | | Left Cheek | **0.20** | 1.02 | **1.22** | ∑SAR < 1.6, Not required |
| | | | Left Tilted | 0.05 | 1.00 | **1.05** | ∑SAR < 1.6, Not required |

| | | | | | | | |
|---|---|---|---|---|---|---|---|
| | | Body-Worn | Front Face | 0.21 | 0.30 | **0.51** | ∑SAR < 1.6, Not required |
| | | | Rear Face | **0.52** | **0.36** | **0.88** | ∑SAR < 1.6, Not required |
| | | Hotspot | Front Face | 0.21 | 0.29 | **0.50** | ∑SAR < 1.6, Not required |
| | | | Rear Face | **0.52** | **0.29** | **0.81** | ∑SAR < 1.6, Not required |
| | | | Left Side | 0.18 | 0.22 | **0.40** | ∑SAR < 1.6, Not required |
| | | | Right Side | 0.05 | 0.05 | **0.10** | ∑SAR < 1.6, Not required |
| | | | Top Side | 0.00 | 0.47 | **0.47** | ∑SAR < 1.6, Not required |
| | | | Bottom Side | 0.44 | 0.00 | **0.44** | ∑SAR < 1.6, Not required |
| **54** | **LTE 41 + BT (DSS)** | Head | Right Cheek | 0.10 | **0.23** | **0.33** | ∑SAR < 1.6, Not required |
| | | | Right Tilted | 0.09 | 0.04 | **0.13** | ∑SAR < 1.6, Not required |
| | | | Left Cheek | **0.20** | 0.03 | **0.23** | ∑SAR < 1.6, Not required |
| | | | Left Tilted | 0.05 | 0.02 | **0.07** | ∑SAR < 1.6, Not required |
| | | Body-Worn | Front Face | 0.21 | 0.03 | **0.24** | ∑SAR < 1.6, Not required |
| | | | Rear Face | **0.52** | **0.14** | **0.66** | ∑SAR < 1.6, Not required |
| | | Hotspot | Front Face | 0.21 | 0.03 | **0.24** | ∑SAR < 1.6, Not required |
| | | | Rear Face | **0.52** | **0.14** | **0.66** | ∑SAR < 1.6, Not required |
| | | | Left Side | 0.18 | 0.03 | **0.21** | ∑SAR < 1.6, Not required |
| | | | Right Side | 0.05 | 0.01 | **0.06** | ∑SAR < 1.6, Not required |
| | | | Top Side | 0.00 | 0.03 | **0.03** | ∑SAR < 1.6, Not required |
| | | | Bottom Side | 0.44 | 0.00 | **0.44** | ∑SAR < 1.6, Not required |

| No. | Conditions (SAR1 + SAR2) | Exposure Condition | Test Position | Max. SAR1 | Max. SAR2 | SAR Summation | SPLSR Analysis |
|---|---|---|---|---|---|---|---|
| **55** | **LTE 66 + WLAN (DTS)** | Head | Right Cheek | **0.60** | **0.49** | **1.09** | ∑SAR < 1.6, Not required |
| | | | Right Tilted | 0.26 | 0.46 | **0.72** | ∑SAR < 1.6, Not required |
| | | | Left Cheek | 0.33 | 0.34 | **0.67** | ∑SAR < 1.6, Not required |
| | | | Left Tilted | 0.16 | 0.26 | **0.42** | ∑SAR < 1.6, Not required |
| | | Body-Worn | Front Face | 0.78 | 0.13 | **0.91** | ∑SAR < 1.6, Not required |
| | | | Rear Face | **1.16** | **0.18** | **1.34** | ∑SAR < 1.6, Not required |
| | | Hotspot | Front Face | 0.78 | 0.13 | **0.91** | ∑SAR < 1.6, Not required |
| | | | Rear Face | **1.16** | **0.18** | **1.34** | ∑SAR < 1.6, Not required |
| | | | Left Side | 0.16 | 0.10 | **0.26** | ∑SAR < 1.6, Not required |
| | | | Right Side | 0.62 | 0.04 | **0.66** | ∑SAR < 1.6, Not required |
| | | | Top Side | 0.00 | 0.12 | **0.12** | ∑SAR < 1.6, Not required |
| | | | Bottom Side | 1.20 | 0.00 | **1.20** | ∑SAR < 1.6, Not required |

| No. | Conditions (SAR1 + SAR2) | Exposure Condition | Test Position | Max. SAR1 | Max. SAR2 | SAR Summation | SPLSR Analysis |
|---|---|---|---|---|---|---|---|
| 56 | LTE 66 + WLAN (NII) | Head | Right Cheek | **0.60** | **1.11** | **1.71** | **Analyzed as below** |
| | | | Right Tilted | 0.26 | 1.10 | **1.36** | ∑SAR < 1.6, Not required |
| | | | Left Cheek | 0.33 | 1.02 | **1.35** | ∑SAR < 1.6, Not required |
| | | | Left Tilted | 0.16 | 1.00 | **1.16** | ∑SAR < 1.6, Not required |
| | | Body-Worn | Front Face | 0.78 | 0.30 | **1.08** | ∑SAR < 1.6, Not required |
| | | | Rear Face | **1.16** | **0.36** | **1.52** | ∑SAR < 1.6, Not required |
| | | Hotspot | Front Face | 0.78 | 0.29 | **1.07** | ∑SAR < 1.6, Not required |
| | | | Rear Face | **1.16** | **0.29** | **1.45** | ∑SAR < 1.6, Not required |
| | | | Left Side | 0.16 | 0.22 | **0.38** | ∑SAR < 1.6, Not required |
| | | | Right Side | 0.62 | 0.05 | **0.67** | ∑SAR < 1.6, Not required |
| | | | Top Side | 0.00 | 0.47 | **0.47** | ∑SAR < 1.6, Not required |
| | | | Bottom Side | 1.20 | 0.00 | **1.20** | ∑SAR < 1.6, Not required |
| | | Extremity | Rear Face | **3.01** | **0.51** | **3.52** | ∑SAR < 4.0, Not required |
| 57 | LTE 66 + BT (DSS) | Head | Right Cheek | **0.60** | **0.23** | **0.83** | ∑SAR < 1.6, Not required |
| | | | Right Tilted | 0.26 | 0.04 | **0.30** | ∑SAR < 1.6, Not required |
| | | | Left Cheek | 0.33 | 0.03 | **0.36** | ∑SAR < 1.6, Not required |
| | | | Left Tilted | 0.16 | 0.02 | **0.18** | ∑SAR < 1.6, Not required |
| | | Body-Worn | Front Face | 0.78 | 0.03 | **0.81** | ∑SAR < 1.6, Not required |
| | | | Rear Face | **1.16** | **0.14** | **1.30** | ∑SAR < 1.6, Not required |
| | | Hotspot | Front Face | 0.78 | 0.03 | **0.81** | ∑SAR < 1.6, Not required |
| | | | Rear Face | **1.16** | **0.14** | **1.30** | ∑SAR < 1.6, Not required |
| | | | Left Side | 0.16 | 0.03 | **0.19** | ∑SAR < 1.6, Not required |
| | | | Right Side | 0.62 | 0.01 | **0.63** | ∑SAR < 1.6, Not required |
| | | | Top Side | 0.00 | 0.03 | **0.03** | ∑SAR < 1.6, Not required |
| | | | Bottom Side | 1.20 | 0.00 | **1.20** | ∑SAR < 1.6, Not required |

**Note: For simultaneous Transmission analyse, Black color data from original report SA171201W001.**

**<SAR to Peak Location Separation Ratio Analysis>**

The simultaneous transmitting antennas in each operating mode and exposure condition combination are considered one pair at a time to determine the SPLSR. When SAR is measured for both antennas in the pair, the peak location separation distance is computed by the following formula.

$$\text{Peak Location Separation Distance} = \sqrt{(x_1 - x_2)^2 + (y_1 - y_2)^2 + (z_1 - z_2)^2}$$

Where ($x_1$, $y_1$, $z_1$) and ($x_2$, $y_2$, $z_2$) are the coordinates of the extrapolated peak SAR locations in the area or zoom scans.

When standalone test exclusion applies, SAR is estimated; the peak location is assumed to be at the feed-point or geometric center of the antenna. Due to curvatures on the SAM phantom, when SAR is estimated for one of the antennas in an antenna pair, the measured peak SAR location will be translated onto the test device to determine the peak location separation for the antenna pair.

The SPLSR is determined by the following formula.

$$\text{SPLSR} = \frac{(\text{SAR}_1 + \text{SAR}_2)^{1.5}}{R_i}$$

Where $SAR_1$ and $SAR_2$ are the highest reported or estimated SAR for each antenna in the pair, and $R_i$ is the separation distance between the peak SAR locations for the antenna pair in mm.

When the SPLSR is <= 0.04(1g) or <= 0.1(10g), the simultaneous transmission SAR is not required. Otherwise, the enlarged zoom scan and volume scan post-processing procedures will be performed.

| 1 | | | | | | | | | |
|---|---|---|---|---|---|---|---|---|---|
| Conditions | Exposure Condition | Test Position | SAR Value (W/kg) | Coordinates | | | Peak Location Separation Distance ($R_i$, mm) | SPLSR | Simultaneous Transmission SAR Test |
| | | | | x | y | z | | | |
| WCDMA II | Head | Right | 0.81 | 48.0 | 59.1 | -1.4 | 85.9 | 0.031 | SPLSR < 0.04, |
| 802.11n | | Cheek | 1.11 | 8.9 | -17.4 | -1.8 | | | Not required |

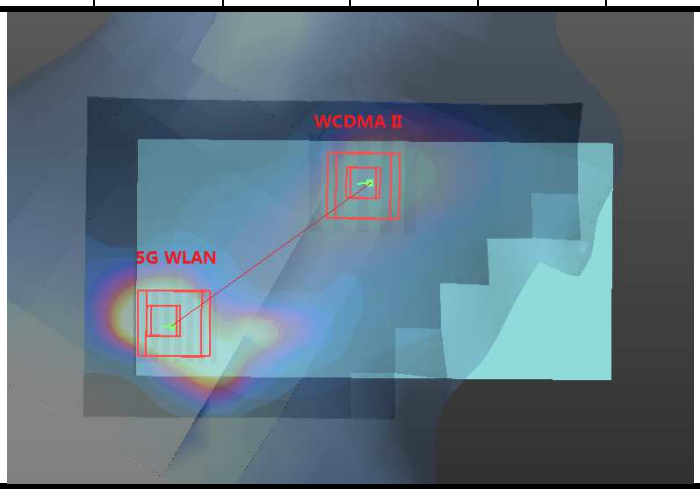

| 2 | | | | | | | | | |
|---|---|---|---|---|---|---|---|---|---|
| Conditions | Exposure Condition | Test Position | SAR Value (W/kg) | Coordinates | | | Peak Location Separation Distance ($R_i$, mm) | SPLSR | Simultaneous Transmission SAR Test |
| | | | | x | y | z | | | |
| WCDMA IV | Head | Right Cheek | 0.67 | 49.3 | 59.9 | -1.0 | 87.2 | 0.027 | SPLSR < 0.04, Not required |
| 802.11n | | | **1.11** | 8.9 | -17.4 | -1.8 | | | |

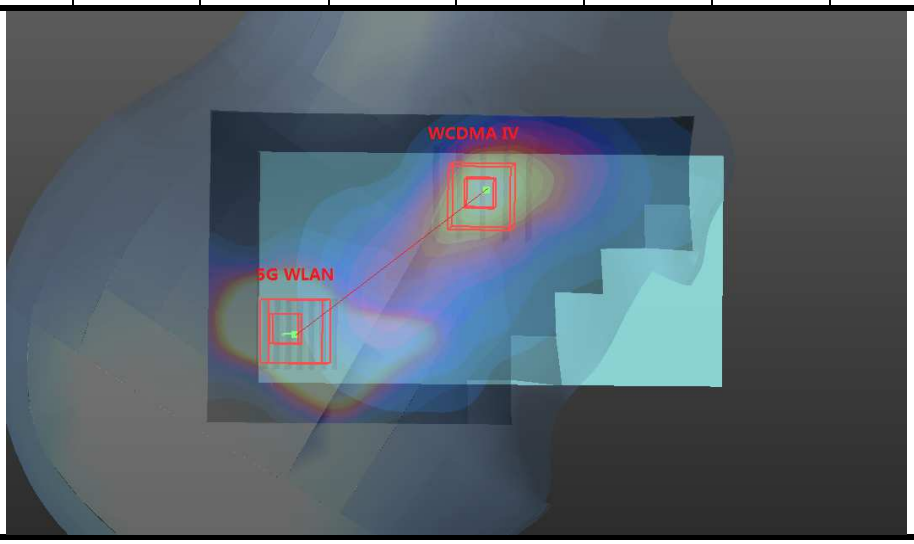


| 3 | | | | | | | | | |
|---|---|---|---|---|---|---|---|---|---|
| Conditions | Exposure Condition | Test Position | SAR Value (W/kg) | Coordinates | | | Peak Location Separation Distance ($R_i$, mm) | SPLSR | Simultaneous Transmission SAR Test |
| | | | | x | y | z | | | |
| LTE 2 | Head | Right Cheek | 0.64 | 46.7 | 58.3 | -1.7 | 84.6 | 0.027 | SPLSR < 0.04, Not required |
| 802.11n | | | 1.11 | 8.9 | -17.4 | -1.8 | | | |

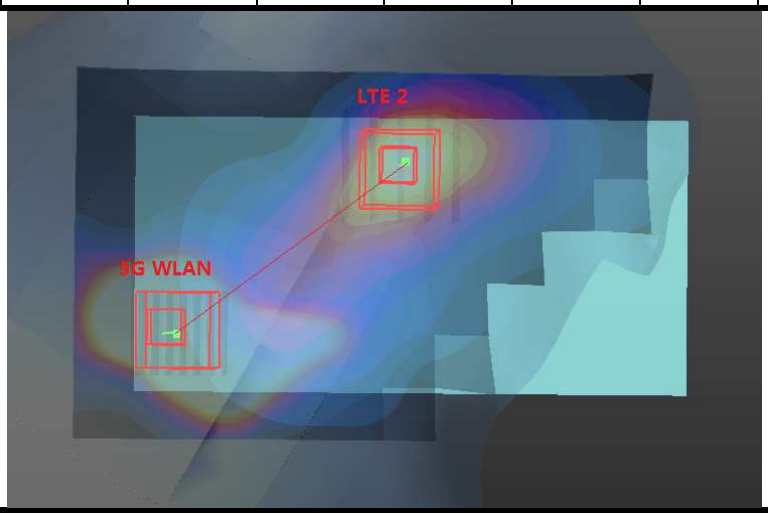

| 4 | | | | | | | | | |
|---|---|---|---|---|---|---|---|---|---|
| Conditions | Exposure Condition | Test Position | SAR Value (W/kg) | Coordinates | | | Peak Location Separation Distance ($R_i$, mm) | SPLSR | Simultaneous Transmission SAR Test |
| | | | | x | y | z | | | |
| LTE 4 | Head | Right Cheek | 0.54 | 49.4 | 59.9 | -1.0 | 87.3 | 0.024 | SPLSR < 0.04, |
| 802.11n | | | 1.11 | 8.9 | -17.4 | -1.8 | | | Not required |

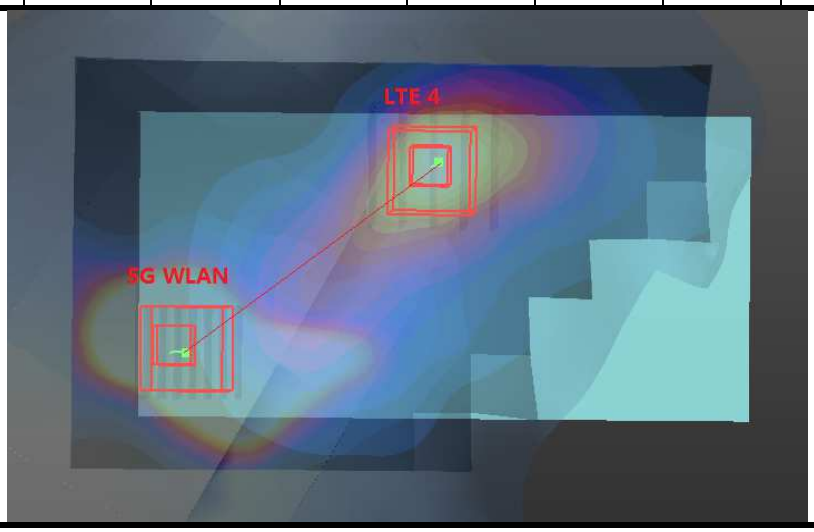


| 5 | | | | | | | | | |
|---|---|---|---|---|---|---|---|---|---|
| Conditions | Exposure Condition | Test Position | SAR Value (W/kg) | Coordinates | | | Peak Location Separation Distance ($R_i$, mm) | SPLSR | Simultaneous Transmission SAR Test |
| | | | | x | y | z | | | |
| LTE 25 | Head | Right Cheek | 0.60 | 45.4 | 57.5 | -2.0 | 83.3 | 0.027 | SPLSR < 0.04, |
| 802.11n | | | 1.11 | 8.9 | -17.4 | -1.8 | | | Not required |

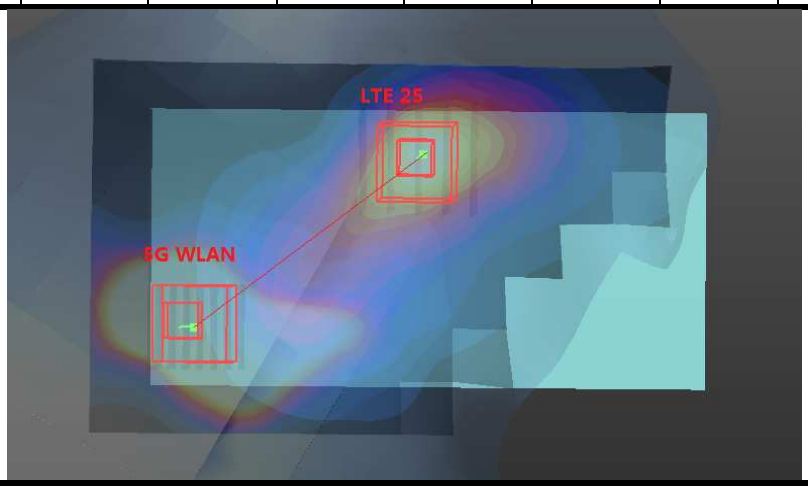

| 6 | | | | | | | | | |
|---|---|---|---|---|---|---|---|---|---|
| Conditions | Exposure Condition | Test Position | SAR Value (W/kg) | Coordinates | | | Peak Location Separation Distance ($R_i$, mm) | SPLSR | Simultaneous Transmission SAR Test |
| | | | | x | y | z | | | |
| LTE 66 | Head | Right Cheek | 0.60 | 48.0 | 59.1 | -1.4 | 85.9 | 0.026 | SPLSR < 0.04, Not required |
| 802.11n | | | 1.11 | 8.9 | -17.4 | -1.8 | | | |

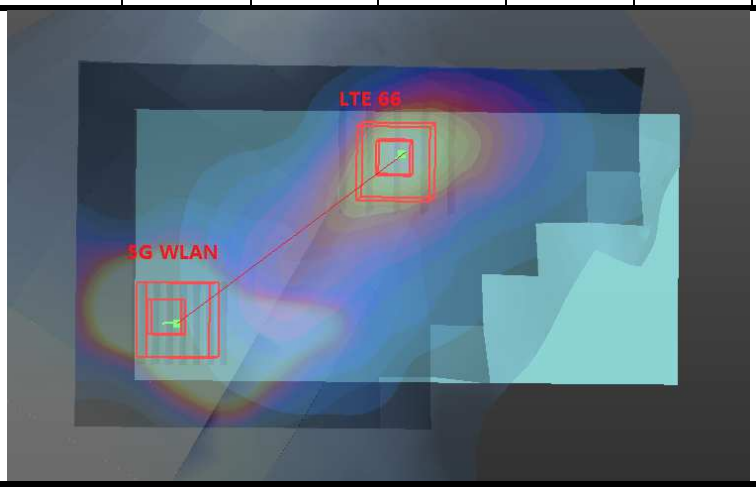


| 7 | | | | | | | | | |
|---|---|---|---|---|---|---|---|---|---|
| Conditions | Exposure Condition | Test Position | SAR Value (W/kg) | Coordinates | | | Peak Location Separation Distance ($R_i$, mm) | SPLSR | Simultaneous Transmission SAR Test |
| | | | | x | y | z | | | |
| WCMDA II | Body | Rear Face | 1.40 | -9.2 | -66.0 | -3.5 | 137.0 | 0.017 | SPLSR < 0.04, Not required |
| 802.11n | | | 0.36 | 19.2 | 68.0 | -1.1 | | | |

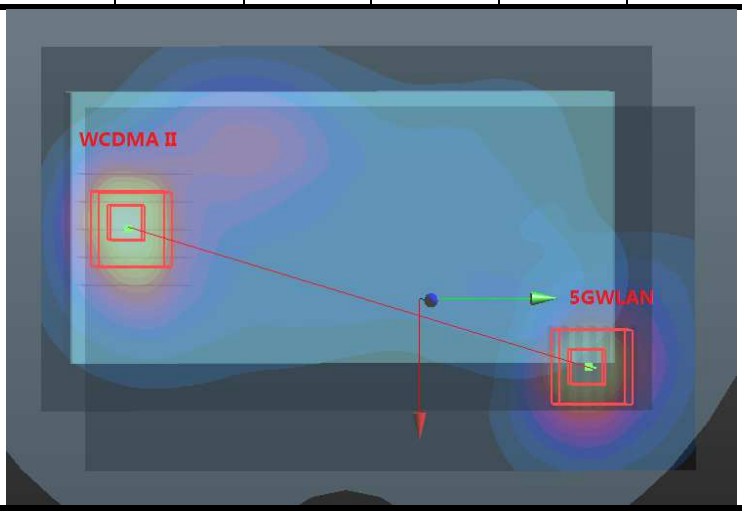

| 8 | | | | | | | | | |
|---|---|---|---|---|---|---|---|---|---|
| Conditions | Exposure Condition | Test Position | SAR Value (W/kg) | Coordinates | | | Peak Location Separation Distance ($R_i$, mm) | SPLSR | Simultaneous Transmission SAR Test |
| | | | | x | y | z | | | |
| WCDMA IV | Body | Rear Face | 1.27 | -9.0 | -64.4 | -3.5 | 135.4 | 0.015 | SPLSR < 0.04, Not required |
| 802.11n | | | 0.36 | 19.2 | 68.0 | -1.1 | | | |

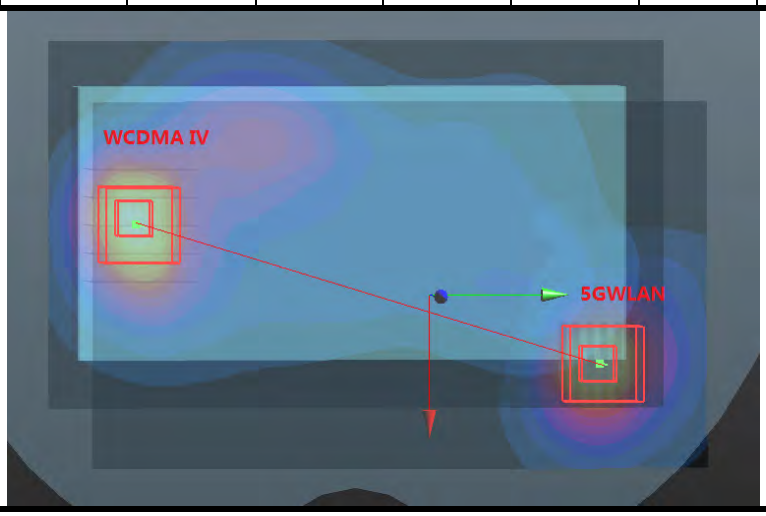


| 9 | | | | | | | | | |
|---|---|---|---|---|---|---|---|---|---|
| Conditions | Exposure Condition | Test Position | SAR Value (W/kg) | Coordinates | | | Peak Location Separation Distance ($R_i$, mm) | SPLSR | Simultaneous Transmission SAR Test |
| | | | | x | y | z | | | |
| WCDMA II | Body | Rear Face | 1.47 | -9.2 | -66.0 | -3.5 | 130.9 | 0.016 | SPLSR < 0.04, Not required |
| BT | | | 0.14 | 21.6 | 61.2 | -3.4 | | | |

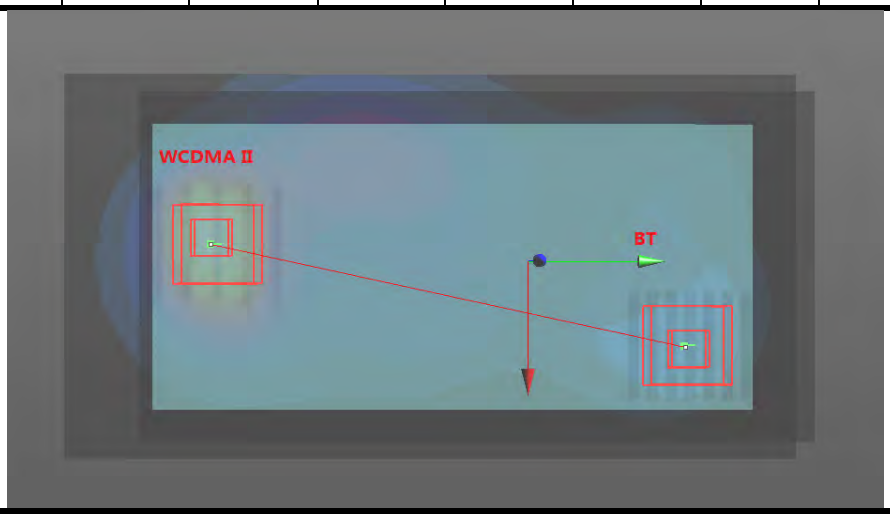

| 10 | | | | | | | | | |
|---|---|---|---|---|---|---|---|---|---|
| Conditions | Exposure Condition | Test Position | SAR Value (W/kg) | Coordinates | | | Peak Location Separation Distance ($R_i$, mm) | SPLSR | Simultaneous Transmission SAR Test |
| | | | | x | y | z | | | |
| WCDMA II | Hotspot | Rear Face | 1.47 | -9.2 | -66.0 | -3.5 | 134.5 | 0.016 | SPLSR < 0.04, Not required |
| 802.1b | | | 0.18 | 15.4 | 66.2 | -3.5 | | | |

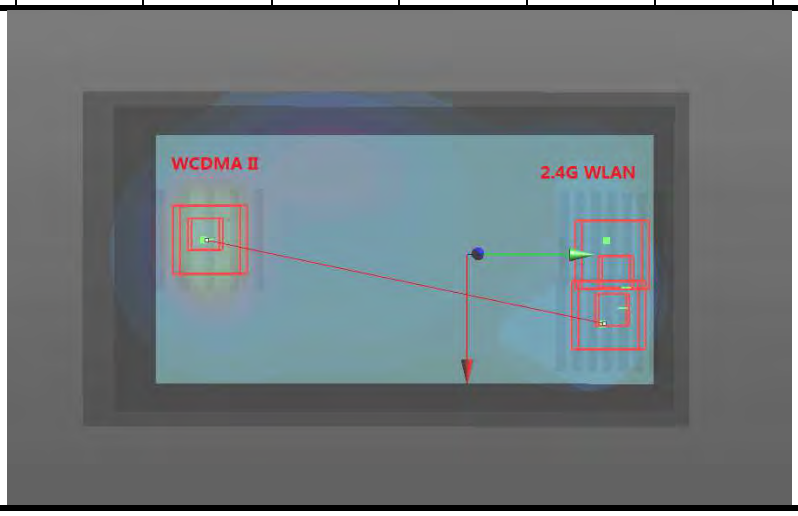


| 11 | | | | | | | | | |
|---|---|---|---|---|---|---|---|---|---|
| Conditions | Exposure Condition | Test Position | SAR Value (W/kg) | Coordinates | | | Peak Location Separation Distance ($R_i$, mm) | SPLSR | Simultaneous Transmission SAR Test |
| | | | | x | y | z | | | |
| WCDMA II | Hotspot | Rear Face | 1.40 | -9.0 | -66.0 | -3.5 | 134.6 | 0.016 | SPLSR < 0.04, Not required |
| 802.11a | | | 0.29 | 19.0 | 65.6 | -1.1 | | | |

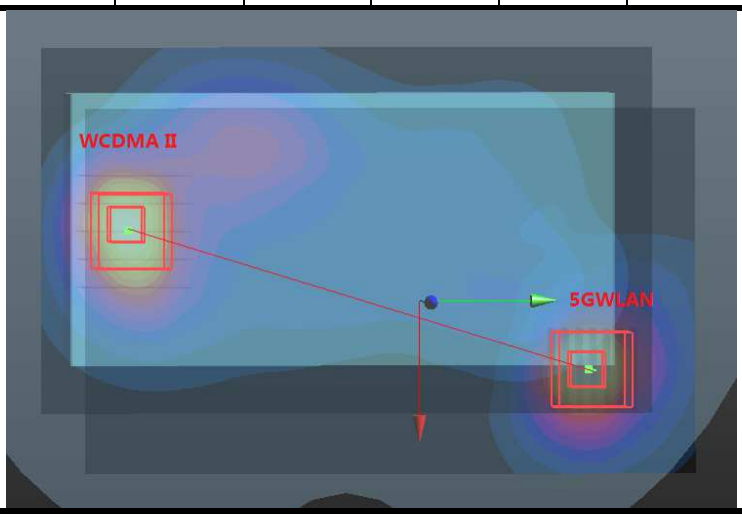

| 12 | | | | | | | | | |
|---|---|---|---|---|---|---|---|---|---|
| Conditions | Exposure Condition | Test Position | SAR Value (W/kg) | Coordinates | | | Peak Location Separation Distance ($R_i$, mm) | SPLSR | Simultaneous Transmission SAR Test |
| | | | | x | y | z | | | |
| WCDMA IV | Hotspot | Rear Face | 1.27 | -9.0 | -64.4 | -3.5 | 133.0 | 0.015 | SPLSR < 0.04, Not required |
| 802.11a | | | 0.29 | 19.0 | 65.6 | -1.1 | | | |

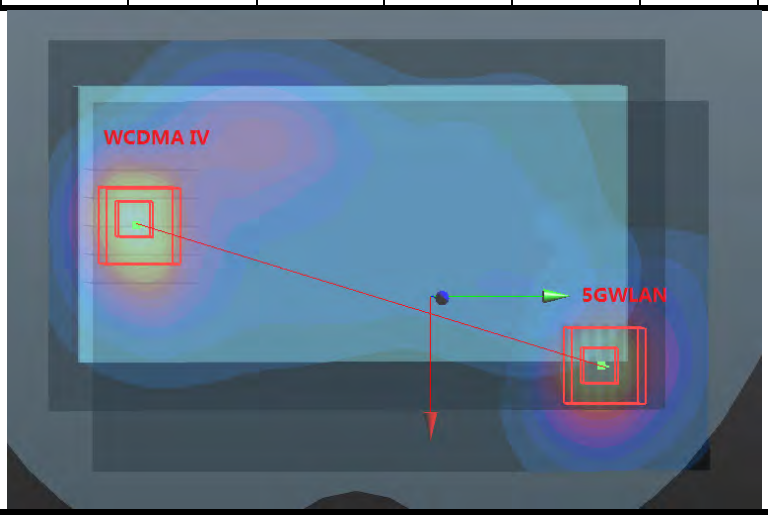


| 13 | | | | | | | | | |
|---|---|---|---|---|---|---|---|---|---|
| Conditions | Exposure Condition | Test Position | SAR Value (W/kg) | Coordinates | | | Peak Location Separation Distance ($R_i$, mm) | SPLSR | Simultaneous Transmission SAR Test |
| | | | | x | y | z | | | |
| WCDMA II | Extremity | Rear Face | 3.90 | -3.2 | -66.0 | -3.4 | 128.0 | 0.072 | SPLSR < 0.1, Not required |
| 802.11n | | | 0.51 | 14.8 | 60.7 | -1.1 | | | |

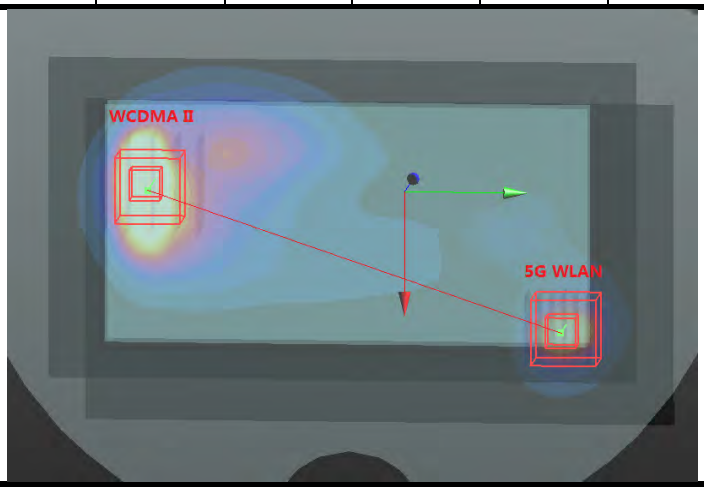

| 14 | | | | | | | | | |
|---|---|---|---|---|---|---|---|---|---|
| Conditions | Exposure Condition | Test Position | SAR Value (W/kg) | Coordinates | | | Peak Location Separation Distance ($R_{ij}$, mm) | SPLSR | Simultaneous Transmission SAR Test |
| | | | | x | y | z | | | |
| WCDMA IV | Extremity | Rear Face | 3.60 | -10.8 | -63.2 | -3.3 | 126.5 | 0.066 | SPLSR < 0.1, Not required |
| 802.11n | | | 0.51 | 14.8 | 60.7 | -1.1 | | | |

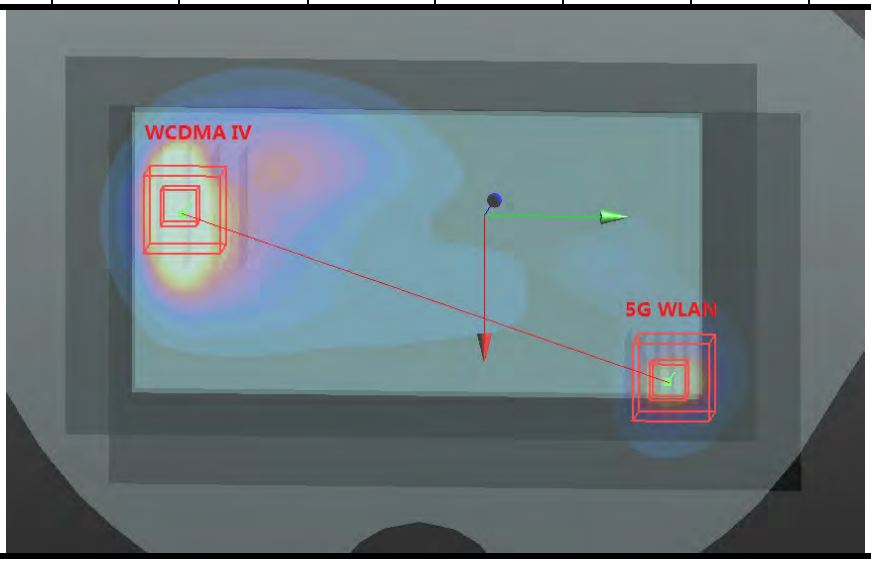


**Test Engineer**：Xianxiong Qin

# 5. Calibration of Test Equipment

| Equipment | Manufacturer | Model | SN | Cal. Date | Cal. Interval |
|---|---|---|---|---|---|
| System Validation Dipole | SPEAG | D750V3 | 1067 | Aug. 27, 2017 | 1 Year |
| System Validation Dipole | SPEAG | D835V2 | 4d139 | Aug. 28, 2017 | 1 Year |
| System Validation Dipole | SPEAG | D1750V2 | 1071 | Aug. 26, 2017 | 1 Year |
| System Validation Dipole | SPEAG | D1900V2 | 5d159 | Aug. 26, 2017 | 1 Year |
| System Validation Dipole | SPEAG | D2300V2 | 1053 | Aug. 30, 2017 | 1 Year |
| System Validation Dipole | SPEAG | D2450V2 | 893 | Aug. 29, 2017 | 1 Year |
| System Validation Dipole | SPEAG | D2600V2 | 1110 | Aug. 29, 2017 | 1 Year |
| System Validation Dipole | SPEAG | D5GHzV2 | 1133 | Sep. 18, 2017 | 1 Year |
| Dosimetric E-Field Probe | SPEAG | EX3DV4 | 3873 | Aug. 25, 2017 | 1 Year |
| Data Acquisition Electronics | SPEAG | DAE4 | 1341 | Aug. 23, 2017 | 1 Year |
| Radio Communication Analyzer | ANRITSU | MT8820C | 6201300717 | Jul. 24, 2017 | 1 Year |
| Wireless Communication Test Set | Agilent | E5515C | MY50260600 | Jun. 28, 2017 | 1 Year |
| ENA Series Network Analyzer | Agilent | E5071C | MY46214638 | Jul. 24, 2017 | 1 Year |
| Spectrum Analyzer | KEYSIGHT | N9010A | MY54510355 | Jun. 27, 2017 | 1Year |
| MXG Analog Signal Generator | KEYSIGHT | N5183A | MY50143024 | Mar. 14, 2018 | 1 Year |
| Power Meter | Agilent | N1914A | MY52180044 | Aug. 12, 2016 | 2 Years |
| Power Sensor | Agilent | E9304A H18 | MY52050011 | Jan. 04, 2018 | 1 Year |
| Power Meter | ANRITSU | ML2495A | 1506002 | Mar. 02, 2018 | 1 Year |
| Power Sensor | ANRITSU | MA2411B | 1339353 | Mar. 02, 2018 | 1 Year |
| Temp. & Humi. Recorder | CLOCK | HTC-1 | 157248 | Jul. 26, 2017 | 1 Year |
| Electronic Thermometer | YONGFA | YF-160A | 120100323 | Sep. 22, 2017 | 1 Year |
| Coupler | Woken | 0110A056020-10 | COM27RW1A3 | Sep. 20, 2017 | 1 Year |

# 6. Measurement Uncertainty

| Source of Uncertainty | Tolerance (± %) | Probability Distribution | Divisor | Ci (1g) | Ci (10g) | Standard Uncertainty (± %, 1g) | Standard Uncertainty (± %, 10g) | Vi |
|---|---|---|---|---|---|---|---|---|
| **Measurement System** | | | | | | | | |
| Probe Calibration | 6.0 | Normal | 1 | 1 | 1 | 6.0 | 6.0 | ∞ |
| Axial Isotropy | 4.7 | Rectangular | √3 | 0.707 | 0.707 | 1.9 | 1.9 | ∞ |
| Hemispherical Isotropy | 9.6 | Rectangular | √3 | 0.707 | 0.707 | 3.9 | 3.9 | ∞ |
| Boundary Effect | 1.0 | Rectangular | √3 | 1 | 1 | 0.6 | 0.6 | ∞ |
| Linearity | 4.7 | Rectangular | √3 | 1 | 1 | 2.7 | 2.7 | ∞ |
| System Detection Limits | 0.25 | Rectangular | √3 | 1 | 1 | 0.14 | 0.14 | ∞ |
| Readout Electronics | 0.3 | Normal | 1 | 1 | 1 | 0.3 | 0.3 | ∞ |
| Response Time | 0.0 | Rectangular | √3 | 1 | 1 | 0.0 | 0.0 | ∞ |
| Integration Time | 1.7 | Rectangular | √3 | 1 | 1 | 1.0 | 1.0 | ∞ |
| RF Ambient Conditions - Noise | 3.0 | Rectangular | √3 | 1 | 1 | 1.7 | 1.7 | ∞ |
| RF Ambient Conditions - Reflections | 3.0 | Rectangular | √3 | 1 | 1 | 1.7 | 1.7 | ∞ |
| Probe Positioner Mechanical Tolerance | 0.4 | Rectangular | √3 | 1 | 1 | 0.2 | 0.2 | ∞ |
| Probe Positioning with Respect to Phantom Shell | 2.9 | Rectangular | √3 | 1 | 1 | 1.7 | 1.7 | ∞ |
| Extrapolation, interpolation, and integration algorithms for max. SAR evaluation | 2.0 | Rectangular | √3 | 1 | 1 | 1.2 | 1.2 | ∞ |
| **Test Sample Related** | | | | | | | | |
| Test Sample Positioning | 1.5 / 0.7 | Normal | 1 | 1 | 1 | 1.5 | 0.7 | 32 |
| Device Holder Uncertainty | 4.2 / 1.8 | Normal | 1 | 1 | 1 | 4.2 | 1.8 | 32 |
| Output Power Variation - SAR Drift Measurement | 5.0 | Rectangular | √3 | 1 | 1 | 2.9 | 2.9 | ∞ |
| **Phantom and Tissue Parameters** | | | | | | | | |
| Phantom Uncertainty (Shape and Thickness Tolerances) | 7.2 | Rectangular | √3 | 1 | 1 | 4.2 | 4.2 | ∞ |
| Liquid Conductivity - Deviation from Target Values | 5.0 | Rectangular | √3 | 0.64 | 0.43 | 1.8 | 1.2 | ∞ |
| Liquid Conductivity - Measurement Uncertainty | 1.0 | Normal | 1 | 0.64 | 0.43 | 0.6 | 0.4 | 25 |
| Liquid Permittivity - Deviation from Target Values | 5.0 | Rectangular | √3 | 0.60 | 0.49 | 1.7 | 1.4 | ∞ |
| Liquid Permittivity - Measurement Uncertainty | 0.5 | Normal | 1 | 0.60 | 0.49 | 0.3 | 0.2 | 25 |
| **Combined Standard Uncertainty** | | | | | | ± 11.2 % | ± 10.4 % | |
| **Expanded Uncertainty (K=2)** | | | | | | **± 22.4 %** | **± 20.8 %** | |

**Uncertainty budget for frequency range 300 MHz to 3 GHz**

| Source of Uncertainty | Tolerance (± %) | Probability Distribution | Divisor | Ci (1g) | Ci (10g) | Standard Uncertainty (± %, 1g) | Standard Uncertainty (± %, 10g) | Vi |
|---|---|---|---|---|---|---|---|---|
| **Measurement System** | | | | | | | | |
| Probe Calibration | 6.55 | Normal | 1 | 1 | 1 | 6.55 | 6.55 | ∞ |
| Axial Isotropy | 4.7 | Rectangular | √3 | 0.707 | 0.707 | 1.9 | 1.9 | ∞ |
| Hemispherical Isotropy | 9.6 | Rectangular | √3 | 0.707 | 0.707 | 3.9 | 3.9 | ∞ |
| Boundary Effect | 2.0 | Rectangular | √3 | 1 | 1 | 1.2 | 1.2 | ∞ |
| Linearity | 4.7 | Rectangular | √3 | 1 | 1 | 2.7 | 2.7 | ∞ |
| System Detection Limits | 0.25 | Rectangular | √3 | 1 | 1 | 0.14 | 0.14 | ∞ |
| Readout Electronics | 0.3 | Normal | 1 | 1 | 1 | 0.3 | 0.3 | ∞ |
| Response Time | 0.0 | Rectangular | √3 | 1 | 1 | 0.0 | 0.0 | ∞ |
| Integration Time | 1.7 | Rectangular | √3 | 1 | 1 | 1.0 | 1.0 | ∞ |
| RF Ambient Conditions - Noise | 3.0 | Rectangular | √3 | 1 | 1 | 1.7 | 1.7 | ∞ |
| RF Ambient Conditions - Reflections | 3.0 | Rectangular | √3 | 1 | 1 | 1.7 | 1.7 | ∞ |
| Probe Positioner Mechanical Tolerance | 0.4 | Rectangular | √3 | 1 | 1 | 0.2 | 0.2 | ∞ |
| Probe Positioning with Respect to Phantom Shell | 6.7 | Rectangular | √3 | 1 | 1 | 3.9 | 3.9 | ∞ |
| Extrapolation, interpolation, and integration algorithms for max. SAR evaluation | 4.0 | Rectangular | √3 | 1 | 1 | 2.3 | 2.3 | ∞ |
| **Test Sample Related** | | | | | | | | |
| Test Sample Positioning | 1.5 / 0.7 | Normal | 1 | 1 | 1 | 1.5 | 0.7 | 32 |
| Device Holder Uncertainty | 4.2 / 1.8 | Normal | 1 | 1 | 1 | 4.2 | 1.8 | 32 |
| Output Power Variation - SAR Drift Measurement | 5.0 | Rectangular | √3 | 1 | 1 | 2.9 | 2.9 | ∞ |
| **Phantom and Tissue Parameters** | | | | | | | | |
| Phantom Uncertainty (Shape and Thickness Tolerances) | 7.6 | Rectangular | √3 | 1 | 1 | 4.4 | 4.4 | ∞ |
| Liquid Conductivity - Deviation from Target Values | 5.0 | Rectangular | √3 | 0.64 | 0.43 | 1.8 | 1.2 | ∞ |
| Liquid Conductivity - Measurement Uncertainty | 1.0 | Normal | 1 | 0.64 | 0.43 | 0.6 | 0.4 | 25 |
| Liquid Permittivity - Deviation from Target Values | 5.0 | Rectangular | √3 | 0.60 | 0.49 | 1.7 | 1.4 | ∞ |
| Liquid Permittivity - Measurement Uncertainty | 0.5 | Normal | 1 | 0.60 | 0.49 | 0.3 | 0.2 | 25 |
| **Combined Standard Uncertainty** | | | | | | ± 12.3 % | ± 11.5 % | |
| **Expanded Uncertainty (K=2)** | | | | | | **± 24.6 %** | **± 23.0 %** | |

**Uncertainty budget for frequency range 3 GHz to 6 GHz**

# 7. Information on the Testing Laboratories

We, BV 7LAYERS COMMUNICATIONS TECHNOLOGY (SHENZHEN) CO. LTD., were founded in 2015 to provide our best service in EMC, Radio, Telecom and Safety consultation. Our laboratories are accredited and approved according to ISO/IEC 17025.

If you have any comments, please feel free to contact us at the following:

Add: No. B102, Dazu Chuangxin Mansion, North of Beihuan Avenue, North Area, Hi-Tech Industry Park, Nanshan District, Shenzhen, Guangdong, China
Tel: 86-755-8869-6566
Fax: 86-755-8869-6577

**Email:** customerservice.dg@cn.bureauveritas.com
**Web Site:** www.bureauveritas.com

The road map of all our labs can be found in our web site also.

**---END---**

# Appendix A. SAR Plots of System Verification

The plots for system verification with largest deviation for each SAR system combination are shown as follows.

## System Check_H750_180420

**DUT: Dipole:750 MHz;Type:D750V3;SN:1067**

Communication System: CW; Frequency: 750 MHz;Duty Cycle: 1:1
Medium: H750_0420 Medium parameters used: f = 750 MHz; $\sigma$ = 0.89 S/m; $\varepsilon_r$ = 40.774; $\rho$ = 1000 kg/m$^3$
Ambient Temperature：23.3 ℃； Liquid Temperature：22.2 ℃

DASY5 Configuration:
- Probe: EX3DV4 - SN3873; ConvF(10.08, 10.08, 10.08); Calibrated: 2017/08/25;
- Sensor-Surface: 1.4mm (Mechanical Surface Detection)
- Electronics: DAE4 Sn1341; Calibrated: 2017/08/23
- Phantom: Left Phantom with CRP v5.0; Type: QD000P40CD; Serial: TP:1722
- Measurement SW: DASY52, Version 52.8 (8); SEMCAD X Version 14.6.10 (7331)

**Pin=250mW/Area Scan (61x101x1):** Interpolated grid: dx=1.500 mm, dy=1.500 mm
Maximum value of SAR (interpolated) = 2.50 W/kg

**Pin=250mW/Zoom Scan (5x5x7)/Cube 0:** Measurement grid: dx=8mm, dy=8mm, dz=5mm
Reference Value = 53.02 V/m; Power Drift = 0.11 dB
Peak SAR (extrapolated) = 2.90 W/kg
**SAR(1 g) = 2.02 W/kg; SAR(10 g) = 1.35 W/kg**
Maximum value of SAR (measured) = 2.52 W/kg

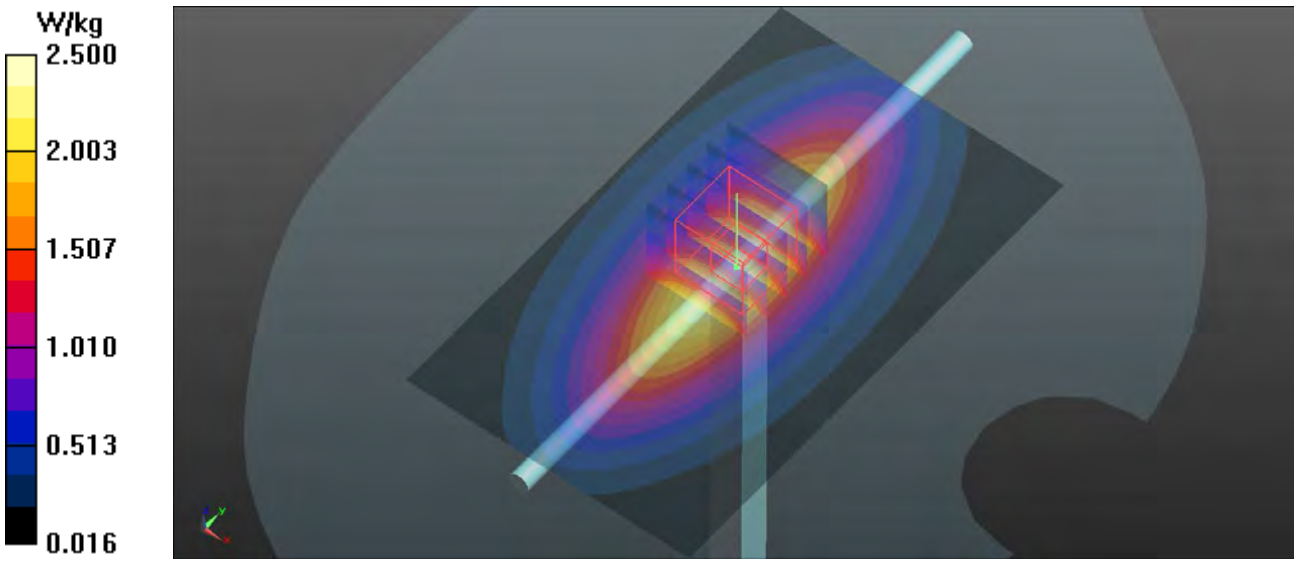

## System Check_H835_180421

**DUT: Dipole:835 MHz;Type:D835V2; SN:4d139**

Communication System: CW; Frequency: 835 MHz;Duty Cycle: 1:1
Medium: H835_0421 Medium parameters used: f = 835 MHz; $\sigma$ = 0.89 S/m; $\varepsilon_r$ = 41.41; $\rho$ = 1000 kg/m$^3$
Ambient Temperature：23.2 ℃； Liquid Temperature：22.4 ℃

DASY5 Configuration:
- Probe: EX3DV4 - SN3873; ConvF(9.74, 9.74, 9.74); Calibrated: 2017/08/25;
- Sensor-Surface: 1.4mm (Mechanical Surface Detection)
- Electronics: DAE4 Sn1341; Calibrated: 2017/08/23
- Phantom: Left Phantom with CRP v5.0; Type: QD000P40CD; Serial: TP:1722
- Measurement SW: DASY52, Version 52.8 (8); SEMCAD X Version 14.6.10 (7331)

**Pin=250mW/Area Scan (71x121x1):** Interpolated grid: dx=1.500 mm, dy=1.500 mm
Maximum value of SAR (interpolated) = 2.98 W/kg

**Pin=250mW/Zoom Scan (5x5x7)/Cube 0:** Measurement grid: dx=8mm, dy=8mm, dz=5mm
Reference Value = 57.70 V/m; Power Drift = 0.06 dB
Peak SAR (extrapolated) = 3.41 W/kg
**SAR(1 g) = 2.32 W/kg; SAR(10 g) = 1.52 W/kg**
Maximum value of SAR (measured) = 3.07 W/kg

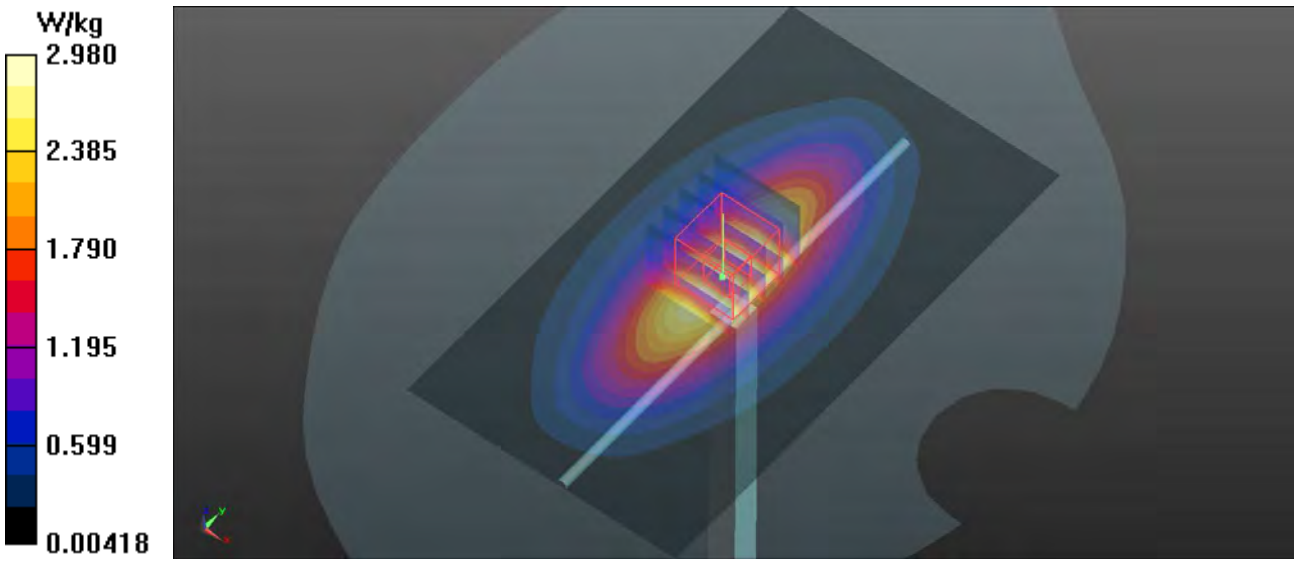

## System Check_H1750_180419

**DUT: Dipole:1750 MHz;Type:D1750V2; SN:1071**

Communication System: CW; Frequency: 1750 MHz;Duty Cycle: 1:1
Medium: H1750_0419 Medium parameters used: f = 1750 MHz; $\sigma$ = 1.354 S/m; $\varepsilon_r$ = 39.394; $\rho$ = 1000 kg/m$^3$
Ambient Temperature：23.4 ℃； Liquid Temperature：22.3 ℃

DASY5 Configuration:
- Probe: EX3DV4 - SN3873; ConvF(8.62, 8.62, 8.62); Calibrated: 2017/08/25;
- Sensor-Surface: 1.4mm (Mechanical Surface Detection)
- Electronics: DAE4 Sn1341; Calibrated: 2017/08/23
- Phantom: Front Phantom with CRP v5.0; Type: QD000P40CD; Serial: TP:1695
- Measurement SW: DASY52, Version 52.8 (8); SEMCAD X Version 14.6.10 (7331)

**Pin=250mW/Area Scan (81x81x1):** Interpolated grid: dx=1.500 mm, dy=1.500 mm
Maximum value of SAR (interpolated) = 13.6 W/kg

**Pin=250mW/Zoom Scan (5x5x7)/Cube 0:** Measurement grid: dx=8mm, dy=8mm, dz=5mm
Reference Value = 96.99 V/m; Power Drift = 0.12 dB
Peak SAR (extrapolated) = 16.8 W/kg
**SAR(1 g) = 9.15 W/kg; SAR(10 g) = 4.81 W/kg**
Maximum value of SAR (measured) = 14.2 W/kg

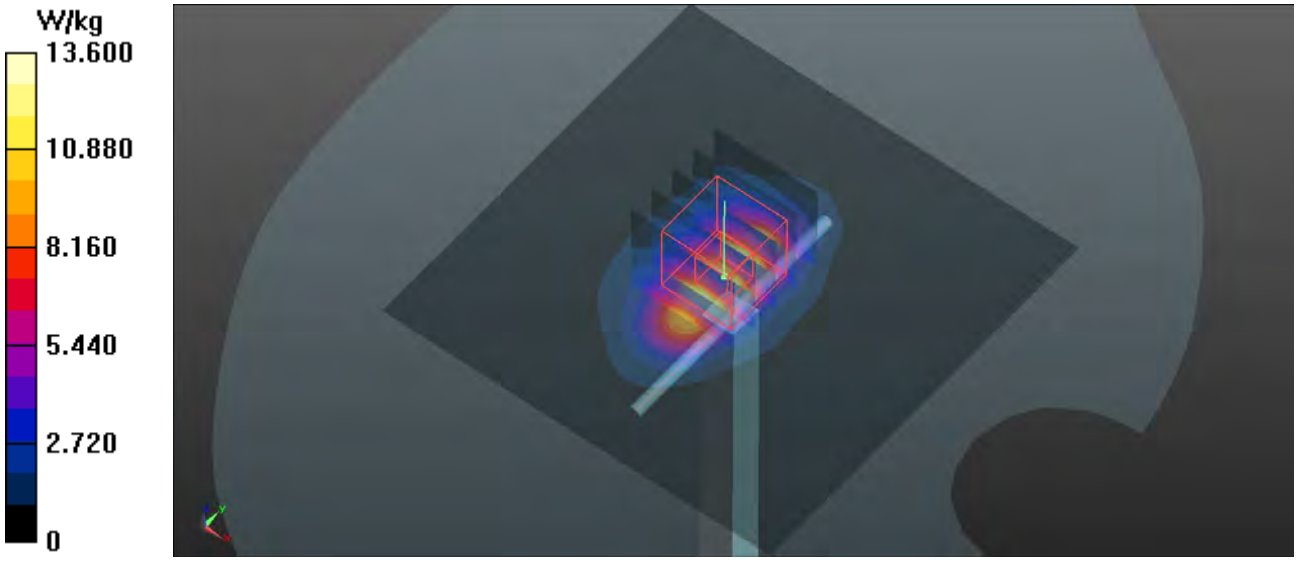

## System Check_H1900_180418

**DUT: Dipole:1900 MHz;Type:D1900V2; SN:5d159**

Communication System: CW; Frequency: 1900 MHz;Duty Cycle: 1:1
Medium: H1900_0418 Medium parameters used: f = 1900 MHz; $\sigma$ = 1.413 S/m; $\varepsilon_r$ = 41.33; $\rho$ = 1000 kg/m$^3$
Ambient Temperature：23.4 ℃； Liquid Temperature：22.0 ℃

DASY5 Configuration:
- Probe: EX3DV4 - SN3873; ConvF(8.37, 8.37, 8.37); Calibrated: 2017/08/25;
- Sensor-Surface: 1.4mm (Mechanical Surface Detection)
- Electronics: DAE4 Sn1341; Calibrated: 2017/08/23
- Phantom: Front Phantom with CRP v5.0; Type: QD000P40CD; Serial: TP:1695
- Measurement SW: DASY52, Version 52.8 (8); SEMCAD X Version 14.6.10 (7331)

**Pin=250mW/Area Scan (61x71x1):** Interpolated grid: dx=1.500 mm, dy=1.500 mm
Maximum value of SAR (interpolated) = 15.5 W/kg

**Pin=250mW/Zoom Scan (5x5x7)/Cube 0:** Measurement grid: dx=8mm, dy=8mm, dz=5mm
Reference Value = 99.69 V/m; Power Drift = 0.15 dB
Peak SAR (extrapolated) = 18.5 W/kg
**SAR(1 g) = 10.2 W/kg; SAR(10 g) = 5.29 W/kg**
Maximum value of SAR (measured) = 14.6 W/kg

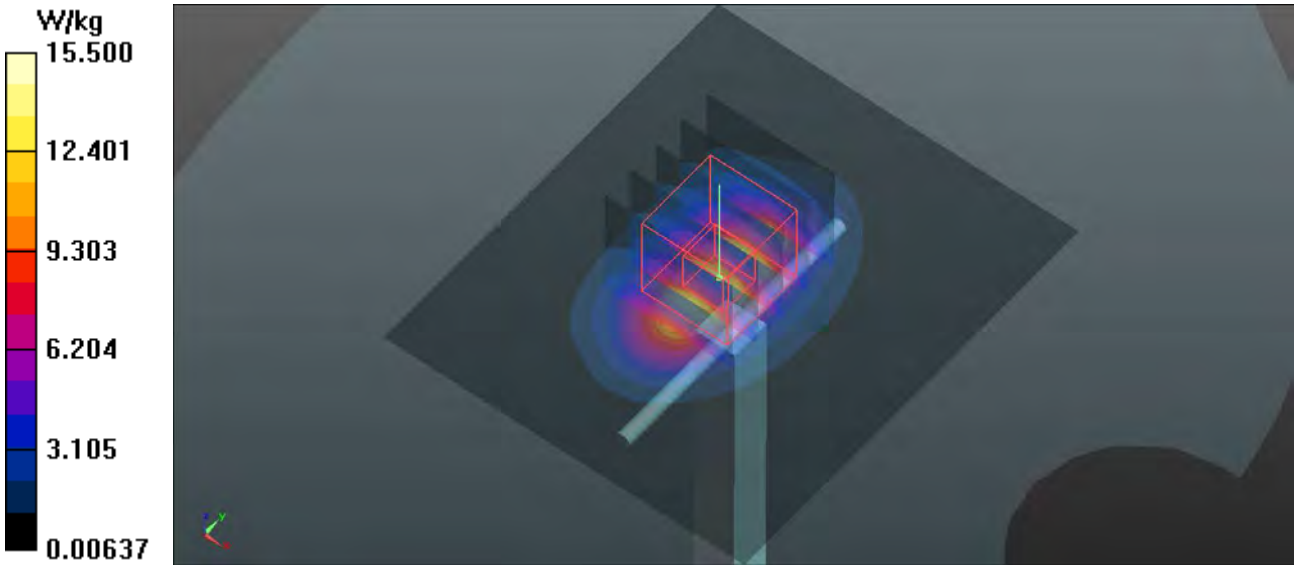

## System Check_H2300_180425

**DUT: Dipole:2300 MHz;Type:D2300V2; SN:1053**

Communication System: CW; Frequency: 2300 MHz;Duty Cycle: 1:1
Medium: H2300_0425 Medium parameters used: f = 2300 MHz; $\sigma$ = 1.669 S/m; $\varepsilon_r$ = 38.532; $\rho$ = 1000 kg/m$^3$
Ambient Temperature：23.2 ℃； Liquid Temperature：22.0 ℃

DASY5 Configuration:
- Probe: EX3DV4 - SN3873; ConvF(7.85, 7.85, 7.85); Calibrated: 2017/08/25;
- Sensor-Surface: 1.4mm (Mechanical Surface Detection)
- Electronics: DAE4 Sn1341; Calibrated: 2017/08/23
- Phantom: Front Phantom with CRP v5.0; Type: QD000P40CD; Serial: TP:1695
- Measurement SW: DASY52, Version 52.8 (8); SEMCAD X Version 14.6.10 (7331)

**Pin=250mW/Area Scan (81x81x1):** Interpolated grid: dx=1.200 mm, dy=1.200 mm
Maximum value of SAR (interpolated) = 21.9 W/kg

**Pin=250mW/Zoom Scan (7x7x7)/Cube 0:** Measurement grid: dx=5mm, dy=5mm, dz=5mm
Reference Value = 104.3 V/m; Power Drift = 0.09 dB
Peak SAR (extrapolated) = 24.5 W/kg
**SAR(1 g) = 12.1 W/kg; SAR(10 g) = 5.7 W/kg**
Maximum value of SAR (measured) = 20.1 W/kg

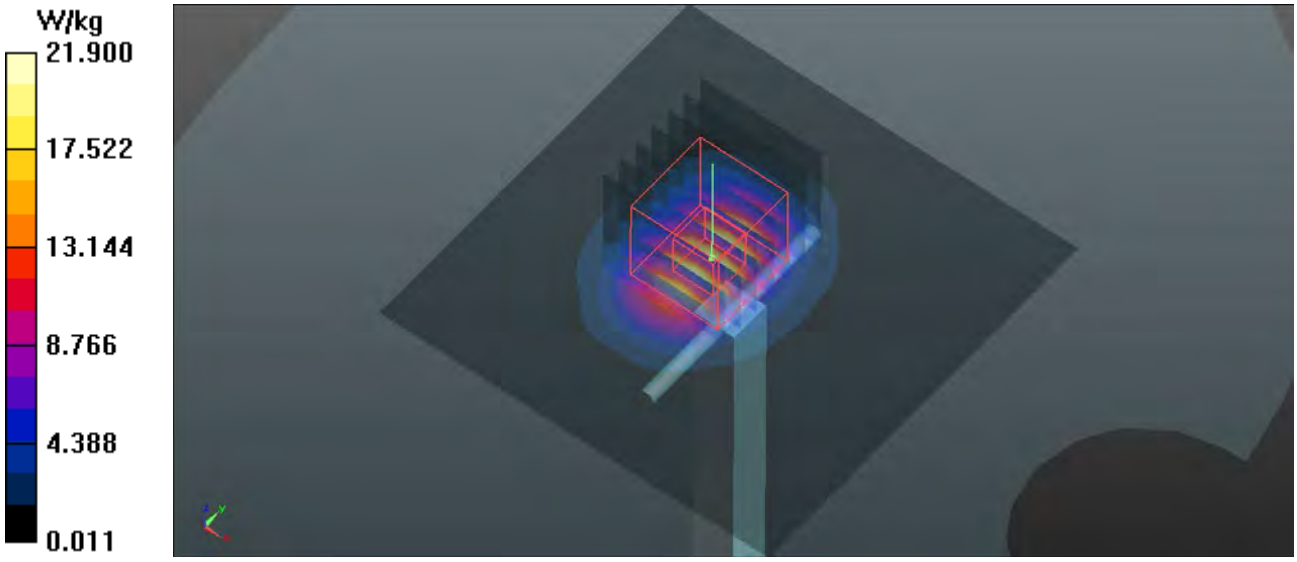

## System Check_H2450_180424

**DUT: Dipole:2450 MHz;Type:D2450V2; SN:893**

Communication System: CW; Frequency: 2450 MHz;Duty Cycle: 1:1
Medium: H2450_0424 Medium parameters used: f = 2450 MHz; $\sigma$ = 1.795 S/m; $\varepsilon_r$ = 38.822; $\rho$ = 1000 kg/m$^3$
Ambient Temperature：23.3 ℃； Liquid Temperature：22.3 ℃

DASY5 Configuration:
- Probe: EX3DV4 - SN3873; ConvF(7.36, 7.36, 7.36); Calibrated: 2017/08/25;
- Sensor-Surface: 1.4mm (Mechanical Surface Detection)
- Electronics: DAE4 Sn1341; Calibrated: 2017/08/23
- Phantom: Front Phantom with CRP v5.0; Type: QD000P40CD; Serial: TP:1695
- Measurement SW: DASY52, Version 52.8 (8); SEMCAD X Version 14.6.10 (7331)

**Pin=250mW/Area Scan (81x81x1):** Interpolated grid: dx=1.200 mm, dy=1.200 mm
Maximum value of SAR (interpolated) = 19.6 W/kg

**Pin=250mW/Zoom Scan (7x7x7)/Cube 0:** Measurement grid: dx=5mm, dy=5mm, dz=5mm
Reference Value = 98.38 V/m; Power Drift = 0.14 dB
Peak SAR (extrapolated) = 27.9 W/kg
**SAR(1 g) = 12.5 W/kg; SAR(10 g) = 5.62 W/kg**
Maximum value of SAR (measured) = 19.9 W/kg

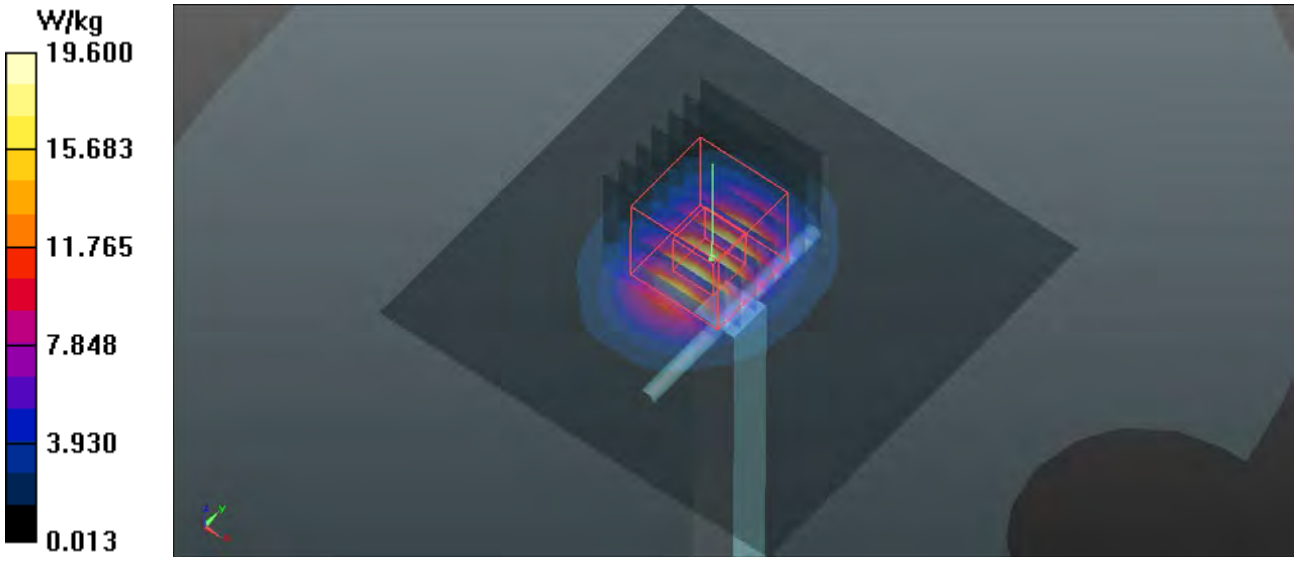

## System Check_H2600_180423

**DUT: Dipole:2600 MHz;Type:D2600V2; SN:1110**

Communication System: CW; Frequency: 2600 MHz;Duty Cycle: 1:1
Medium: H2600_0423 Medium parameters used: f = 2600 MHz; $\sigma$ = 2.039 S/m; $\varepsilon_r$ = 38.932; $\rho$ = 1000 kg/m$^3$
Ambient Temperature：23.5 ℃； Liquid Temperature：22.1 ℃

DASY5 Configuration:
- Probe: EX3DV4 - SN3873; ConvF(7.17, 7.17, 7.17); Calibrated: 2017/08/25;
- Sensor-Surface: 1.4mm (Mechanical Surface Detection)
- Electronics: DAE4 Sn1341; Calibrated: 2017/08/23
- Phantom: Front Phantom with CRP v5.0; Type: QD000P40CD; Serial: TP:1695
- Measurement SW: DASY52, Version 52.8 (8); SEMCAD X Version 14.6.10 (7331)

**Pin=250mW/Area Scan (81x81x1):** Interpolated grid: dx=1.200 mm, dy=1.200 mm
Maximum value of SAR (interpolated) = 27.6 W/kg

**Pin=250mW/Zoom Scan (7x7x7)/Cube 0:** Measurement grid: dx=5mm, dy=5mm, dz=5mm
Reference Value = 107.0 V/m; Power Drift = 0.04 dB
Peak SAR (extrapolated) = 31.2 W/kg
**SAR(1 g) = 14.7 W/kg; SAR(10 g) = 6.59 W/kg**
Maximum value of SAR (measured) = 25.0 W/kg

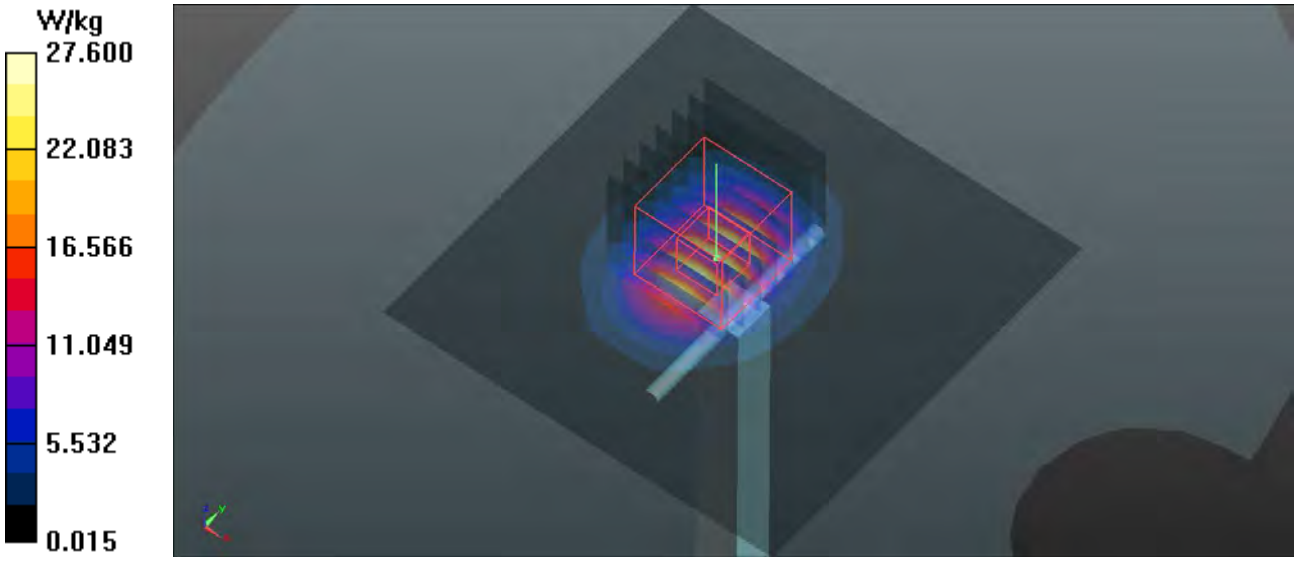

## System Check_H5250_180426

### DUT: Dipole:5GHzV2;Type:D5GHzV2; SN:1133

Communication System: CW; Frequency: 5250 MHz;Duty Cycle: 1:1
Medium: H5G_0426 Medium parameters used: f = 5250 MHz; $\sigma$ = 4.691 S/m; $\varepsilon_r$ = 35.329; $\rho$ = 1000 kg/m$^3$
Ambient Temperature：22.9 ℃； Liquid Temperature：21.9 ℃

DASY5 Configuration:
- Probe: EX3DV4 - SN3873; ConvF(5.04, 5.04, 5.04); Calibrated: 2017/08/25;
- Sensor-Surface: 1.4mm (Mechanical Surface Detection)
- Electronics: DAE4 Sn1341; Calibrated: 2017/08/23
- Phantom: Left Phantom with CRP v5.0; Type: QD000P40CD; Serial: TP:1722
- Measurement SW: DASY52, Version 52.8 (8); SEMCAD X Version 14.6.10 (7331)

**Pin=100mW/Area Scan (91x91x1):** Interpolated grid: dx=1.000 mm, dy=1.000 mm
Maximum value of SAR (interpolated) = 19.2 W/kg

**Pin=100mW/Zoom Scan (7x7x12)/Cube 0:** Measurement grid: dx=4mm, dy=4mm, dz=2mm
Reference Value = 55.12 V/m; Power Drift = 0.04 dB
Peak SAR (extrapolated) = 33.5 W/kg
**SAR(1 g) = 7.98 W/kg; SAR(10 g) = 2.25 W/kg**
Maximum value of SAR (measured) = 20.3 W/kg

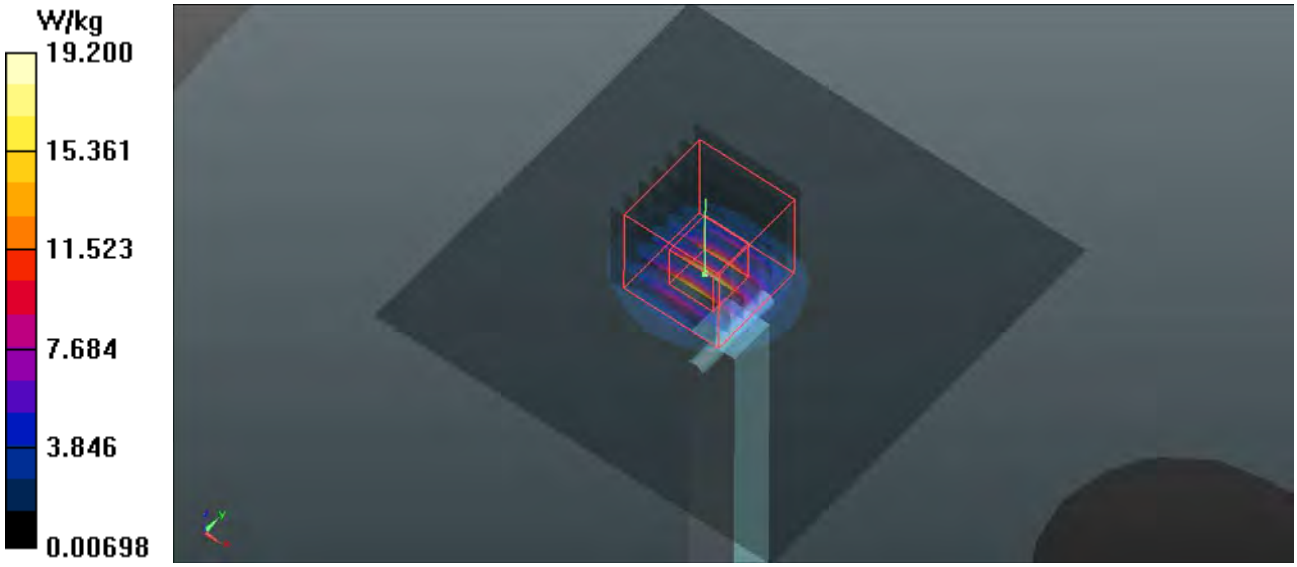

Test Laboratory: Bureau Veritas ADT SAR/HAC Testing Lab Date: 2018/04/26

## System Check_H5600_180426

### DUT: Dipole:5GHzV2;Type:D5GHzV2; SN:1133

Communication System: CW; Frequency: 5600 MHz;Duty Cycle: 1:1
Medium: H5G_0426 Medium parameters used: f = 5600 MHz; $\sigma$ = 5.04 S/m; $\varepsilon_r$ = 34.826; $\rho$ = 1000 kg/m$^3$
Ambient Temperature：22.9 ℃； Liquid Temperature：21.9 ℃

DASY5 Configuration:
- Probe: EX3DV4 - SN3873; ConvF(4.66, 4.66, 4.66); Calibrated: 2017/08/25;
- Sensor-Surface: 1.4mm (Mechanical Surface Detection)
- Electronics: DAE4 Sn1341; Calibrated: 2017/08/23
- Phantom: Left Phantom with CRP v5.0; Type: QD000P40CD; Serial: TP:1722
- Measurement SW: DASY52, Version 52.8 (8); SEMCAD X Version 14.6.10 (7331)

**Pin=100mW/Area Scan (91x91x1):** Interpolated grid: dx=1.000 mm, dy=1.000 mm
Maximum value of SAR (interpolated) = 19.1 W/kg

**Pin=100mW/Zoom Scan (7x7x12)/Cube 0:** Measurement grid: dx=4mm, dy=4mm, dz=2mm
Reference Value = 56.49 V/m; Power Drift = 0.02 dB
Peak SAR (extrapolated) = 34.3 W/kg
**SAR(1 g) = 7.86 W/kg; SAR(10 g) = 2.2 W/kg**
Maximum value of SAR (measured) = 20.4 W/kg

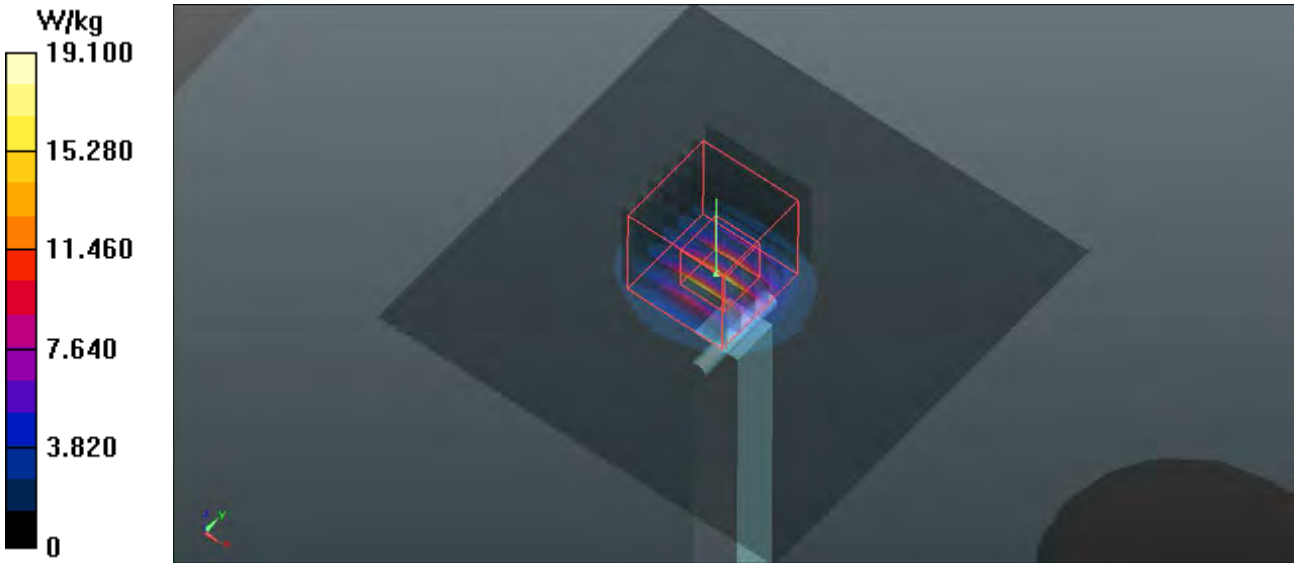

## System Check_H5800_180426

**DUT: Dipole:5GHzV2;Type:D5GHzV2; SN:1133**

Communication System: CW; Frequency: 5800 MHz;Duty Cycle: 1:1
Medium: H5G_0426 Medium parameters used: f = 5800 MHz; $\sigma$ = 5.249 S/m; $\varepsilon_r$ = 34.538; $\rho$ = 1000 kg/m$^3$
Ambient Temperature：22.9 ℃； Liquid Temperature：21.9 ℃

DASY5 Configuration:
- Probe: EX3DV4 - SN3873; ConvF(4.7, 4.7, 4.7); Calibrated: 2017/08/25;
- Sensor-Surface: 1.4mm (Mechanical Surface Detection)
- Electronics: DAE4 Sn1341; Calibrated: 2017/08/23
- Phantom: Left Phantom with CRP v5.0; Type: QD000P40CD; Serial: TP:1722
- Measurement SW: DASY52, Version 52.8 (8); SEMCAD X Version 14.6.10 (7331)

**Pin=100mW/Area Scan (91x91x1):** Interpolated grid: dx=1.000 mm, dy=1.000 mm
Maximum value of SAR (interpolated) = 18.6 W/kg

**Pin=100mW/Zoom Scan (7x7x11)/Cube 0:** Measurement grid: dx=4mm, dy=4mm, dz=2mm
Reference Value = 55.03 V/m; Power Drift = 0.02 dB
Peak SAR (extrapolated) = 34.5 W/kg
**SAR(1 g) = 7.51 W/kg; SAR(10 g) = 2.1 W/kg**
Maximum value of SAR (measured) = 19.9 W/kg

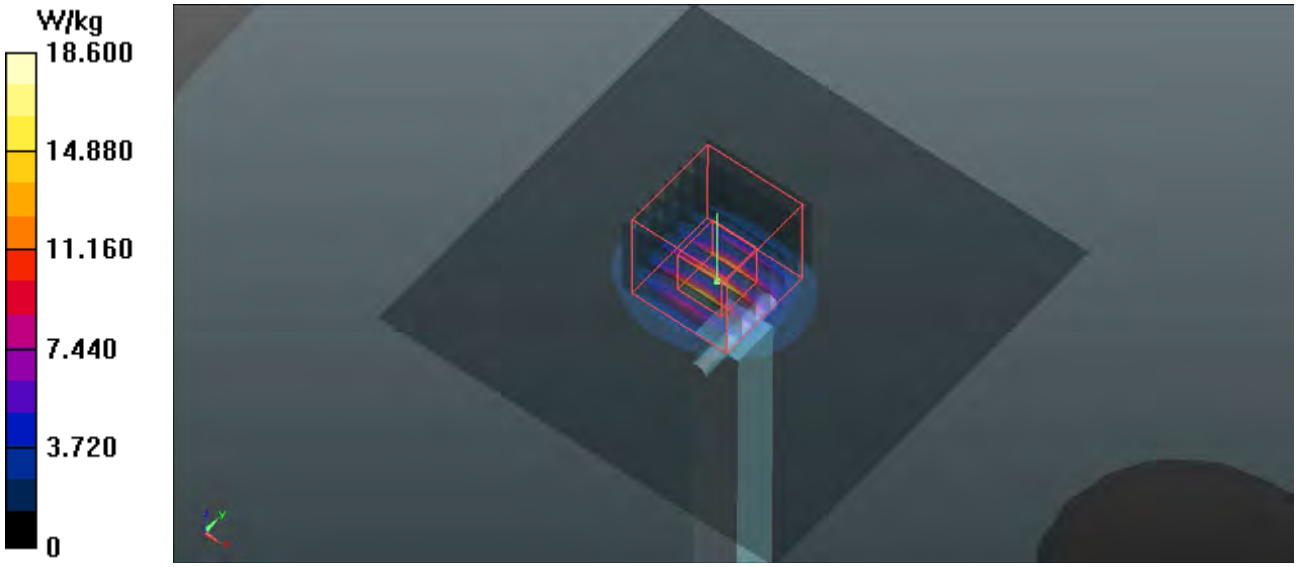

## System Check_B750_180420

**DUT: Dipole:750 MHz;Type:D750V3;SN:1067**

Communication System: CW; Frequency: 750 MHz;Duty Cycle: 1:1
Medium: B750_0420 Medium parameters used: f = 750 MHz; $\sigma$ = 0.965 S/m; $\varepsilon_r$ = 55.172; $\rho$ = 1000 kg/m$^3$
Ambient Temperature：23.3 ℃； Liquid Temperature：22.2 ℃

DASY5 Configuration:
- Probe: EX3DV4 - SN3873; ConvF(9.72, 9.72, 9.72); Calibrated: 2017/08/25;
- Sensor-Surface: 1.4mm (Mechanical Surface Detection)
- Electronics: DAE4 Sn1341; Calibrated: 2017/08/23
- Phantom: Left Phantom with CRP v5.0; Type: QD000P40CD; Serial: TP:1722
- Measurement SW: DASY52, Version 52.8 (8); SEMCAD X Version 14.6.10 (7331)

**Pin=250mW/Area Scan (71x111x1):** Interpolated grid: dx=1.500 mm, dy=1.500 mm
Maximum value of SAR (interpolated) = 2.64 W/kg

**Pin=250mW/Zoom Scan (5x5x7)/Cube 0:** Measurement grid: dx=8mm, dy=8mm, dz=5mm
Reference Value = 51.80 V/m; Power Drift = 0.13 dB
Peak SAR (extrapolated) = 3.01 W/kg
**SAR(1 g) = 2.11 W/kg; SAR(10 g) = 1.44 W/kg**
Maximum value of SAR (measured) = 2.61 W/kg

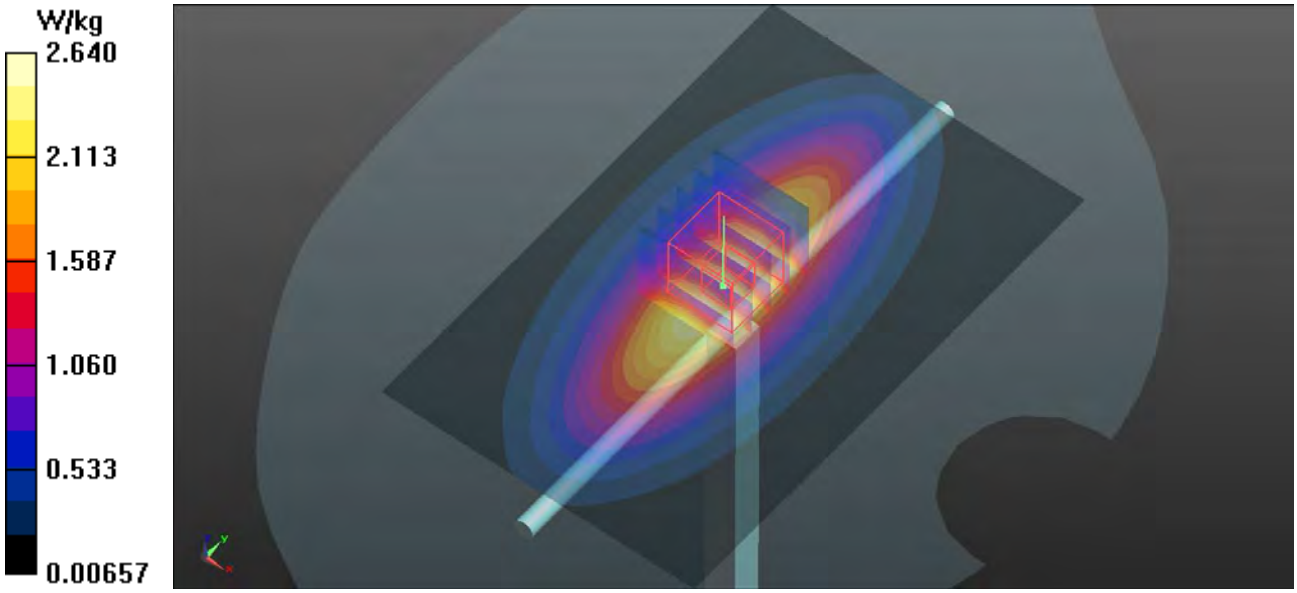

Test Laboratory: Bureau Veritas ADT SAR/HAC Testing Lab Date: 2018/04/21

## System Check_B835_180421

**DUT: Dipole:835 MHz;Type:D835V2; SN:4d139**

Communication System: CW; Frequency: 835 MHz;Duty Cycle: 1:1
Medium: B835_0421 Medium parameters used: f = 835 MHz; $\sigma$ = 0.992 S/m; $\varepsilon_r$ = 56.824; $\rho$ = 1000 kg/m$^3$
Ambient Temperature：23.2 ℃； Liquid Temperature：22.4 ℃

DASY5 Configuration:
- Probe: EX3DV4 - SN3873; ConvF(9.62, 9.62, 9.62); Calibrated: 2017/08/25;
- Sensor-Surface: 1.4mm (Mechanical Surface Detection)
- Electronics: DAE4 Sn1341; Calibrated: 2017/08/23
- Phantom: Left Phantom with CRP v5.0; Type: QD000P40CD; Serial: TP:1722
- Measurement SW: DASY52, Version 52.8 (8); SEMCAD X Version 14.6.10 (7331)

**Pin=250mW/Area Scan (61x101x1):** Interpolated grid: dx=1.500 mm, dy=1.500 mm
Maximum value of SAR (interpolated) = 2.97 W/kg

**Pin=250mW/Zoom Scan (5x5x7)/Cube 0:** Measurement grid: dx=8mm, dy=8mm, dz=5mm
Reference Value = 56.50 V/m; Power Drift = -0.05 dB
Peak SAR (extrapolated) = 3.46 W/kg
**SAR(1 g) = 2.36 W/kg; SAR(10 g) = 1.58 W/kg**
Maximum value of SAR (measured) = 2.97 W/kg

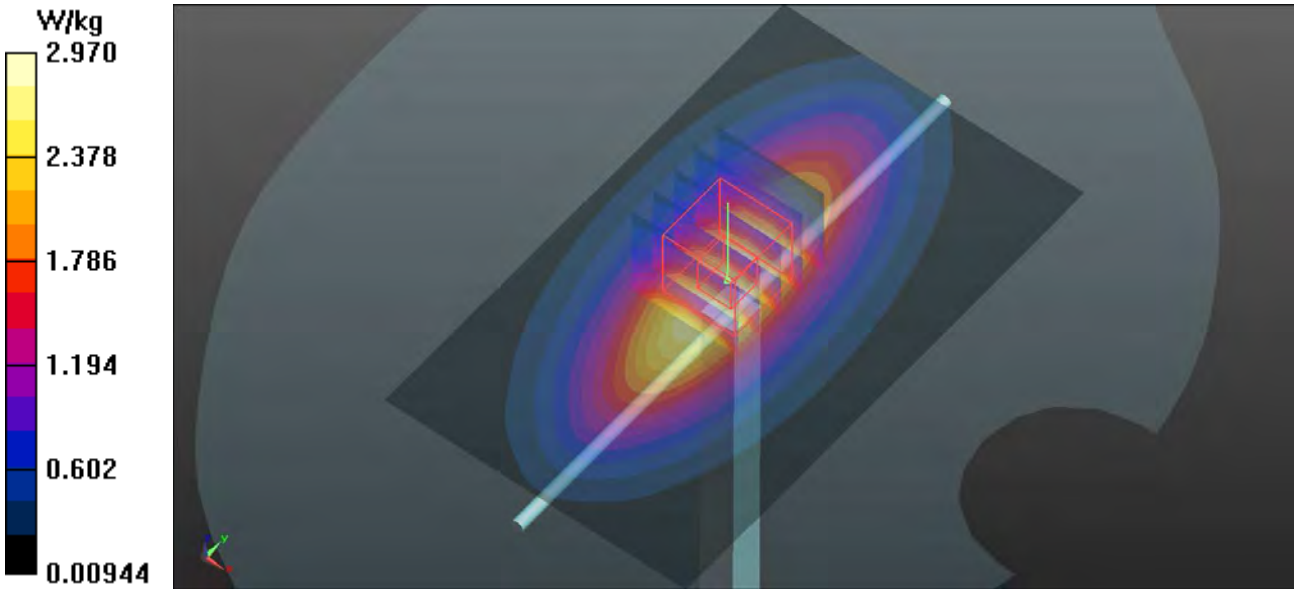

## System Check_B1750_180419

**DUT: Dipole:1750 MHz;Type:D1750V2; SN:1071**

Communication System: CW; Frequency: 1750 MHz;Duty Cycle: 1:1
Medium: B1750_0419 Medium parameters used: f = 1750 MHz; $\sigma$ = 1.492 S/m; $\varepsilon_r$ = 51.975; $\rho$ = 1000 kg/m$^3$
Ambient Temperature：23.4 ℃； Liquid Temperature：22.3 ℃

DASY5 Configuration:
- Probe: EX3DV4 - SN3873; ConvF(8.04, 8.04, 8.04); Calibrated: 2017/08/25;
- Sensor-Surface: 1.4mm (Mechanical Surface Detection)
- Electronics: DAE4 Sn1341; Calibrated: 2017/08/23
- Phantom: ELI v5.0; Type: QDOVA002AA; Serial: TP:1205
- Measurement SW: DASY52, Version 52.8 (8); SEMCAD X Version 14.6.10 (7331)

**Pin=250mW/Area Scan (61x61x1):** Interpolated grid: dx=1.500 mm, dy=1.500 mm
Maximum value of SAR (interpolated) = 11.7 W/kg

**Pin=250mW/Zoom Scan (5x5x7)/Cube 0:** Measurement grid: dx=8mm, dy=8mm, dz=5mm
Reference Value = 83.07 V/m; Power Drift = 0.08 dB
Peak SAR (extrapolated) = 14.6 W/kg
**SAR(1 g) = 9.54 W/kg; SAR(10 g) = 4.95 W/kg**
Maximum value of SAR (measured) = 11.8 W/kg

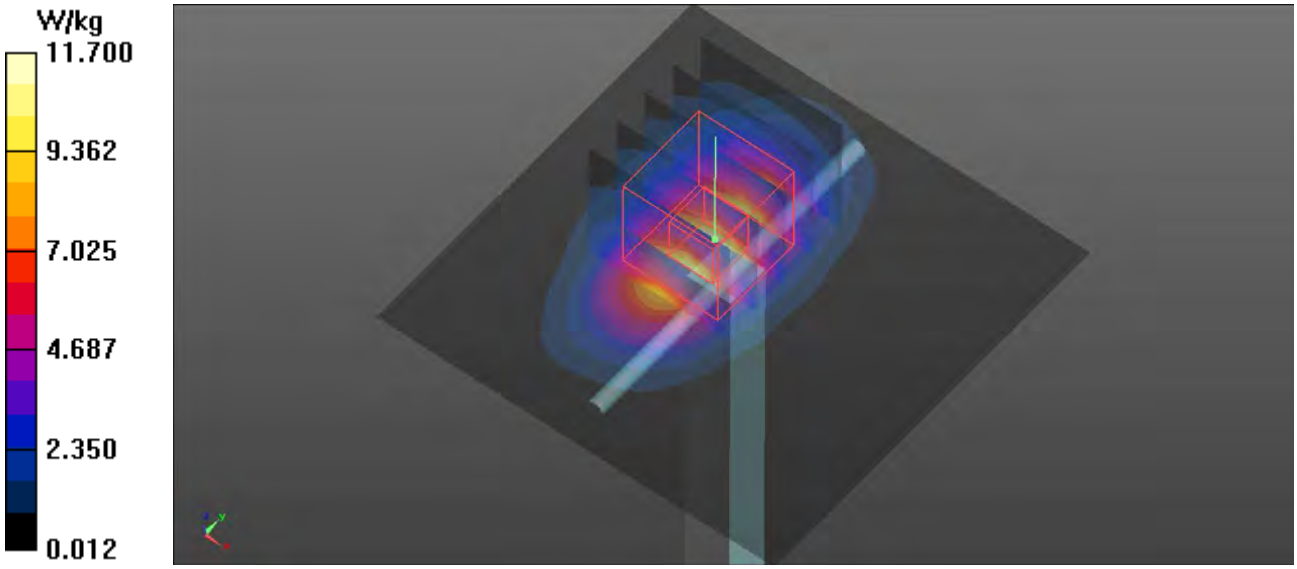

## System Check_B1900_180418

### DUT: Dipole:1900MHz;Type:D1900V2; SN:5d159

Communication System: CW; Frequency: 1900 MHz;Duty Cycle: 1:1
Medium: B1900_0418 Medium parameters used: f = 1900 MHz; $\sigma$ = 1.55 S/m; $\varepsilon_r$ = 52.906; $\rho$ = 1000 kg/m$^3$
Ambient Temperature：23.4 ℃； Liquid Temperature：22.0 ℃

DASY5 Configuration:
- Probe: EX3DV4 - SN3873; ConvF(7.77, 7.77, 7.77); Calibrated: 2017/08/25;
- Sensor-Surface: 1.4mm (Mechanical Surface Detection)
- Electronics: DAE4 Sn1341; Calibrated: 2017/08/23
- Phantom: ELI v5.0; Type: QDOVA002AA; Serial: TP:1205
- Measurement SW: DASY52, Version 52.8 (8); SEMCAD X Version 14.6.10 (7331)

**Pin=250mW/Area Scan (61x61x1):** Interpolated grid: dx=1.500 mm, dy=1.500 mm
Maximum value of SAR (interpolated) = 14.3 W/kg

**Pin=250mW/Zoom Scan (5x5x7)/Cube 0:** Measurement grid: dx=8mm, dy=8mm, dz=5mm
Reference Value = 98.63 V/m; Power Drift = 0.06 dB
Peak SAR (extrapolated) = 18.4 W/kg
**SAR(1 g) = 10.4 W/kg; SAR(10 g) = 5.47 W/kg**
Maximum value of SAR (measured) = 14.7 W/kg

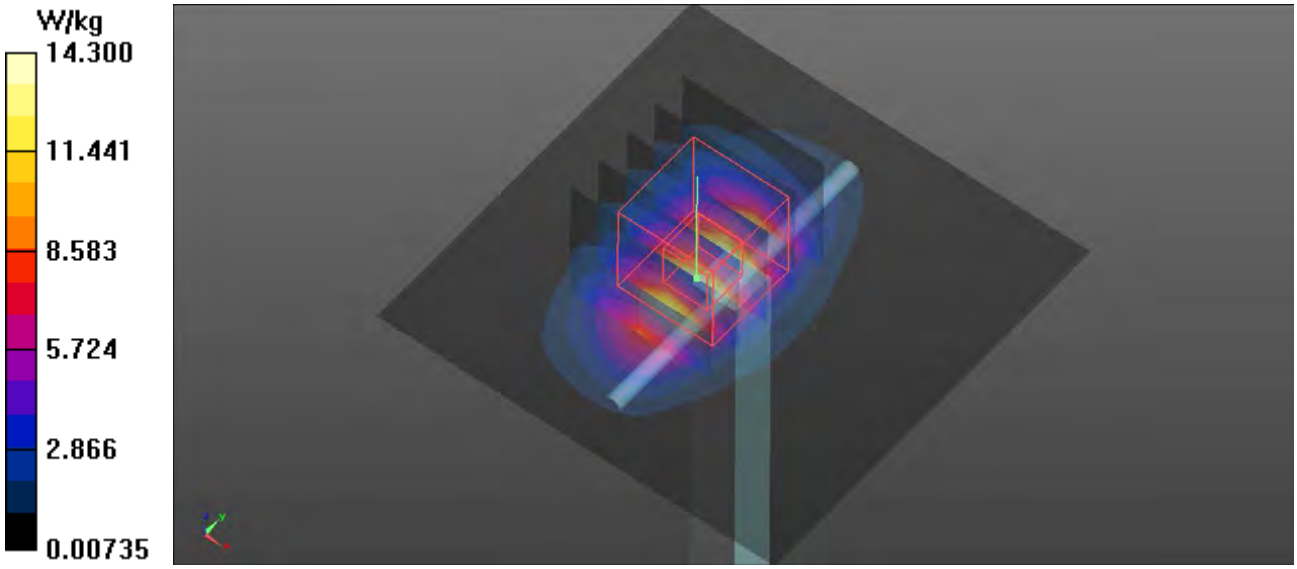

## System Check_B2300_180425

**DUT: Dipole 2300 MHz;Type:D2300V2; SN:1053**

Communication System: CW; Frequency: 2300 MHz;Duty Cycle: 1:1
Medium: B2300_0425 Medium parameters used: f = 2300 MHz; $\sigma$ = 1.801 S/m; $\varepsilon_r$ = 52.651; $\rho$ = 1000 kg/m$^3$
Ambient Temperature：23.2 ℃； Liquid Temperature：22.0 ℃

DASY5 Configuration:
- Probe: EX3DV4 - SN3873; ConvF(7.56, 7.56, 7.56); Calibrated: 2017/08/25;
- Sensor-Surface: 1.4mm (Mechanical Surface Detection)
- Electronics: DAE4 Sn1341; Calibrated: 2017/08/23
- Phantom: ELI v5.0; Type: QDOVA002AA; Serial: TP:1205
- Measurement SW: DASY52, Version 52.8 (8); SEMCAD X Version 14.6.10 (7331)

**Pin=250mW/Area Scan (71x81x1):** Interpolated grid: dx=1.200 mm, dy=1.200 mm
Maximum value of SAR (interpolated) = 20.0 W/kg

**Pin=250mW/Zoom Scan (7x7x7)/Cube 0:** Measurement grid: dx=5mm, dy=5mm, dz=5mm
Reference Value = 100.2 V/m; Power Drift = -0.00 dB
Peak SAR (extrapolated) = 24.4 W/kg
**SAR(1 g) = 12.4 W/kg; SAR(10 g) = 5.92 W/kg**
Maximum value of SAR (measured) = 20.1 W/kg

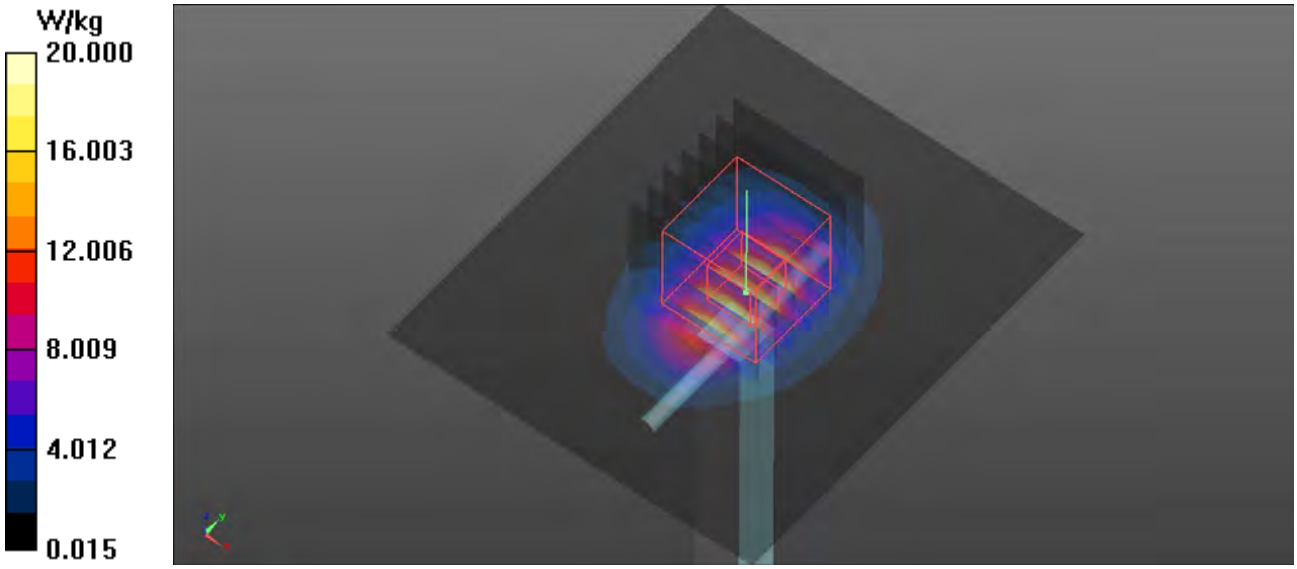

## System Check_B2450_180424

**DUT: Dipole:2450 MHz;Type:D2450V2; SN:893**

Communication System: CW; Frequency: 2450 MHz;Duty Cycle: 1:1
Medium: B2450_0424 Medium parameters used: f = 2450 MHz; $\sigma$ = 1.929 S/m; $\varepsilon_r$ = 51.582; $\rho$ = 1000 kg/m$^3$
Ambient Temperature：23.3 ℃； Liquid Temperature：22.3 ℃

DASY5 Configuration:
- Probe: EX3DV4 - SN3873; ConvF(7.45, 7.45, 7.45); Calibrated: 2017/08/25;
- Sensor-Surface: 1.4mm (Mechanical Surface Detection)
- Electronics: DAE4 Sn1341; Calibrated: 2017/08/23
- Phantom: ELI v5.0; Type: QDOVA002AA; Serial: TP:1205
- Measurement SW: DASY52, Version 52.8 (8); SEMCAD X Version 14.6.10 (7331)

**Pin=250mW/Area Scan (71x81x1):** Interpolated grid: dx=1.200 mm, dy=1.200 mm
Maximum value of SAR (interpolated) = 21.2 W/kg

**Pin=250mW/Zoom Scan (7x7x7)/Cube 0:** Measurement grid: dx=5mm, dy=5mm, dz=5mm
Reference Value = 98.62 V/m; Power Drift = -0.14 dB
Peak SAR (extrapolated) = 25.5 W/kg
**SAR(1 g) = 12.8 W/kg; SAR(10 g) = 6.08 W/kg**
Maximum value of SAR (measured) = 20.9 W/kg

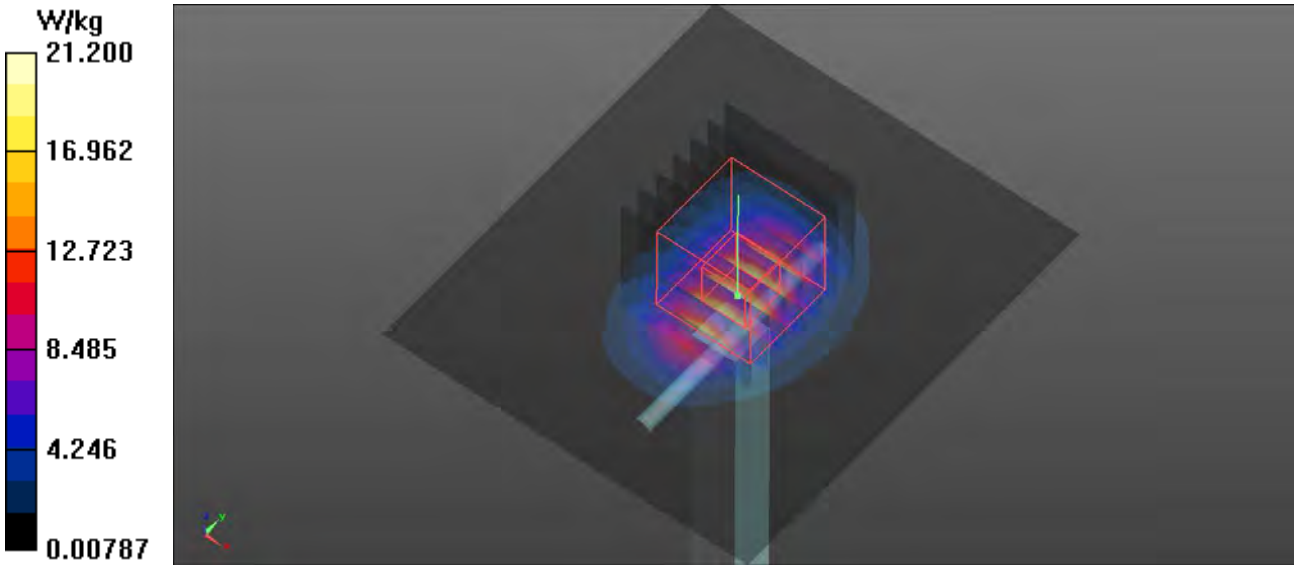

## System Check_B2600_180423

**DUT: Dipole:2600 MHz;Type:D2600V2; SN:1110**

Communication System: CW; Frequency: 2600 MHz;Duty Cycle: 1:1
Medium: B2600_0423 Medium parameters used: f = 2600 MHz; $\sigma$ = 2.199 S/m; $\varepsilon_r$ = 52.35; $\rho$ = 1000 kg/m$^3$
Ambient Temperature：23.5 ℃； Liquid Temperature：22.1 ℃

DASY5 Configuration:
- Probe: EX3DV4 - SN3873; ConvF(7.19, 7.19, 7.19); Calibrated: 2017/08/25;
- Sensor-Surface: 1.4mm (Mechanical Surface Detection)
- Electronics: DAE4 Sn1341; Calibrated: 2017/08/23
- Phantom: ELI v5.0; Type: QDOVA002AA; Serial: TP:1205
- Measurement SW: DASY52, Version 52.8 (8); SEMCAD X Version 14.6.10 (7331)

**Pin=250mW/Area Scan (71x81x1):** Interpolated grid: dx=1.200 mm, dy=1.200 mm
Maximum value of SAR (interpolated) = 24.4 W/kg

**Pin=250mW/Zoom Scan (7x7x7)/Cube 0:** Measurement grid: dx=5mm, dy=5mm, dz=5mm
Reference Value = 97.87 V/m; Power Drift = -0.08 dB
Peak SAR (extrapolated) = 29.7 W/kg
**SAR(1 g) = 14.4 W/kg; SAR(10 g) = 6.53 W/kg**
Maximum value of SAR (measured) = 23.8 W/kg

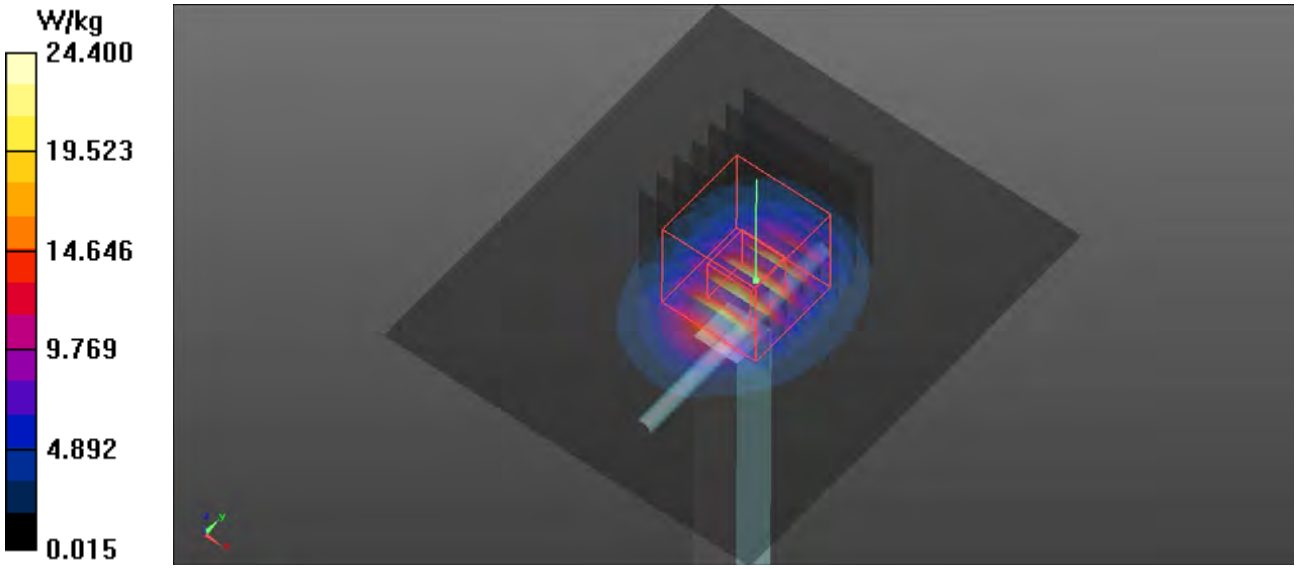

Test Laboratory: Bureau Veritas ADT SAR/HAC Testing Lab Date: 2018/05/02

## System Check_B5250_180502

### DUT: Dipole D5GHzV2;Type:D5GHzV2; SN:1133

Communication System: CW; Frequency: 5250 MHz;Duty Cycle: 1:1
Medium: B5G_0502 Medium parameters used: f = 5250 MHz; $\sigma$ = 5.233 S/m; $\varepsilon_r$ = 50.915; $\rho$ = 1000 kg/m$^3$
Ambient Temperature：23.1 ℃； Liquid Temperature：22.1 ℃

DASY5 Configuration:
- Probe: EX3DV4 - SN3873; ConvF(4.61, 4.61, 4.61); Calibrated: 2017/08/25;
- Sensor-Surface: 1.4mm (Mechanical Surface Detection)
- Electronics: DAE4 Sn1341; Calibrated: 2017/08/23
- Phantom: Left Phantom with CRP v5.0; Type: QD000P40CD; Serial: TP:1722
- Measurement SW: DASY52, Version 52.8 (8); SEMCAD X Version 14.6.10 (7331)

**Pin=100mW/Area Scan (91x91x1):** Interpolated grid: dx=1.000 mm, dy=1.000 mm
Maximum value of SAR (interpolated) = 15.7 W/kg

**Pin=100mW/Zoom Scan (7x7x12)/Cube 0:** Measurement grid: dx=4mm, dy=4mm, dz=2mm
Reference Value = 44.94 V/m; Power Drift = 0.05 dB
Peak SAR (extrapolated) = 27.8 W/kg
**SAR(1 g) = 7.53 W/kg; SAR(10 g) = 2.11 W/kg**
Maximum value of SAR (measured) = 16.5 W/kg

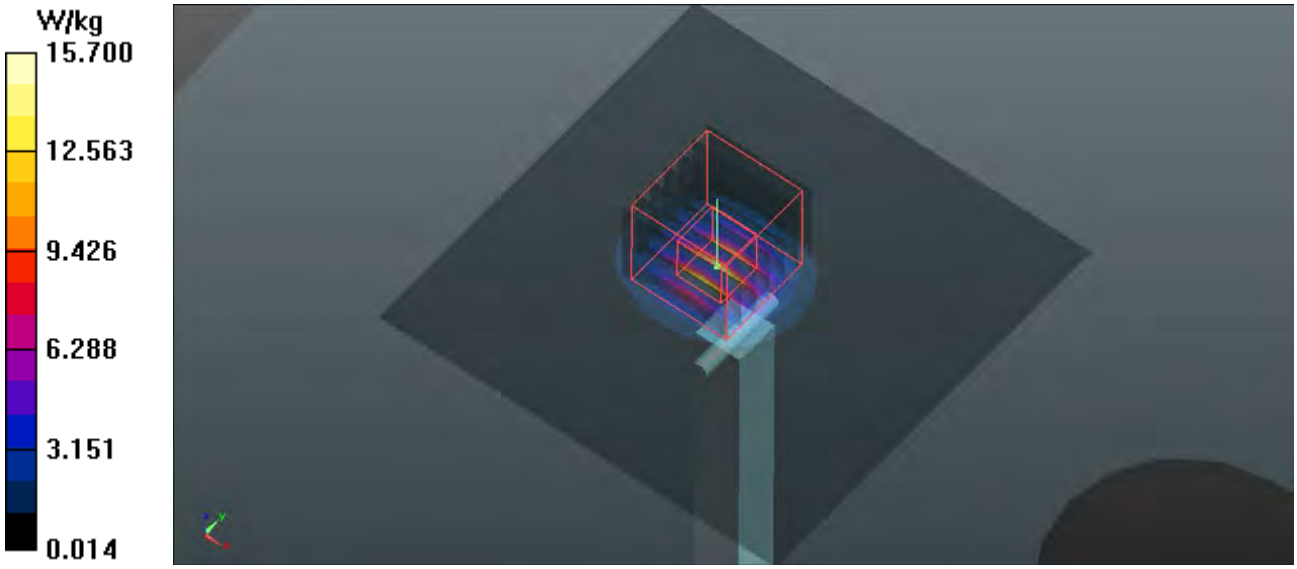

Test Laboratory: Bureau Veritas ADT SAR/HAC Testing Lab Date: 2012/05/02

## System Check_B5600_180502

### DUT: Dipole:D5GHzV2;Type:D5GHzV2; SN:1133

Communication System: CW; Frequency: 5600 MHz;Duty Cycle: 1:1
Medium: B5G_0502 Medium parameters used: f = 5600 MHz; $\sigma$ = 5.817 S/m; $\varepsilon_r$ = 50.304; $\rho$ = 1000 kg/m$^3$
Ambient Temperature：23.1 ℃； Liquid Temperature：22.1 ℃

DASY5 Configuration:
- Probe: EX3DV4 - SN3873; ConvF(3.9, 3.9, 3.9); Calibrated: 2017/08/25;
- Sensor-Surface: 1.4mm (Mechanical Surface Detection)
- Electronics: DAE4 Sn1341; Calibrated: 2017/08/23
- Phantom: Left Phantom with CRP v5.0; Type: QD000P40CD; Serial: TP:1722
- Measurement SW: DASY52, Version 52.8 (8); SEMCAD X Version 14.6.10 (7331)

**Pin=100mW/Area Scan (91x91x1):** Interpolated grid: dx=1.000 mm, dy=1.000 mm
Maximum value of SAR (interpolated) = 19.5 W/kg

**Pin=100mW)/Zoom Scan (7x7x12)/Cube 0:** Measurement grid: dx=4mm, dy=4mm, dz=2mm
Reference Value = 48.86 V/m; Power Drift = 0.05 dB
Peak SAR (extrapolated) = 32.8 W/kg
**SAR(1 g) = 7.83 W/kg; SAR(10 g) = 2.2 W/kg**
Maximum value of SAR (measured) = 20.4 W/kg

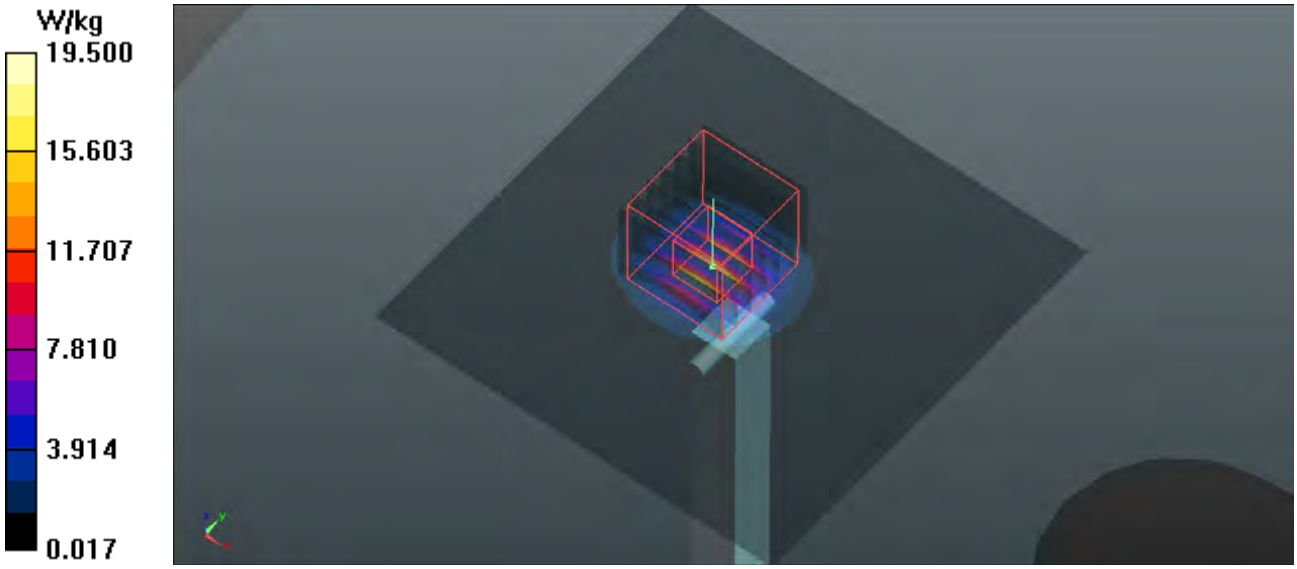

Test Laboratory: Bureau Veritas ADT SAR/HAC Testing Lab Date: 2018/05/02

## System Check_B5800_180502

### DUT: Dipole:D5GHzV2;Type:D5GHzV2; SN:1133

Communication System: CW; Frequency: 5800 MHz;Duty Cycle: 1:1
Medium: B5G_0502 Medium parameters used: f = 5800 MHz; $\sigma$ = 6.115 S/m; $\varepsilon_r$ = 49.816; $\rho$ = 1000 kg/m$^3$
Ambient Temperature：23.1 ℃； Liquid Temperature：22.1 ℃

DASY5 Configuration:
- Probe: EX3DV4 - SN3873; ConvF(4.16, 4.16, 4.16); Calibrated: 2017/08/25;
- Sensor-Surface: 1.4mm (Mechanical Surface Detection)
- Electronics: DAE4 Sn1341; Calibrated: 2017/08/23
- Phantom: Left Phantom with CRP v5.0; Type: QD000P40CD; Serial: TP:1722
- Measurement SW: DASY52, Version 52.8 (8); SEMCAD X Version 14.6.10 (7331)

**Pin=100mW/Area Scan (91x91x1):** Interpolated grid: dx=1.000 mm, dy=1.000 mm
Maximum value of SAR (interpolated) = 16.1 W/kg

**Pin=100mW/Zoom Scan (7x7x12)/Cube 0:** Measurement grid: dx=4mm, dy=4mm, dz=2mm
Reference Value = 46.77 V/m; Power Drift = 0.04 dB
Peak SAR (extrapolated) = 29.9 W/kg
**SAR(1 g) = 7.54 W/kg; SAR(10 g) = 2.09 W/kg**
Maximum value of SAR (measured) = 17.6 W/kg

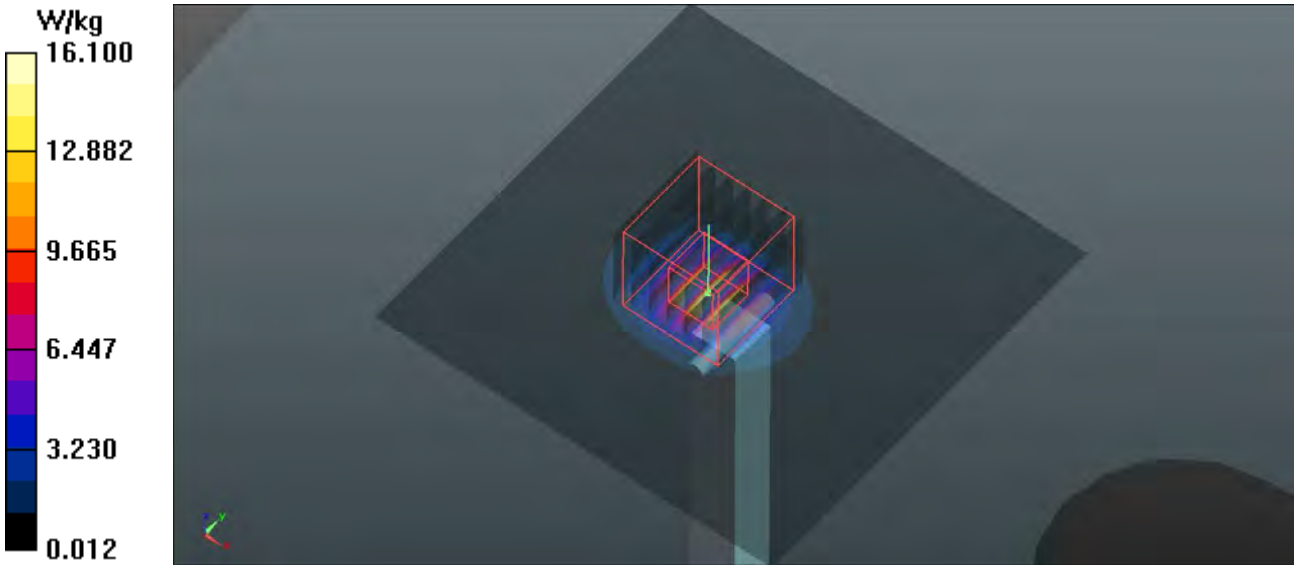

# Appendix B. SAR Plots of SAR Measurement

The SAR plots for highest measured SAR in each exposure configuration, wireless mode and frequency band combination, and measured SAR > 1.5 W/kg are shown as follows.
The plots for SAR measurement are shown as follows.

## P01 GSM850_GPRS12_Left Cheek_Ch128

**DUT: 180412W003**

Communication System: GPRS12; Frequency: 824.2 MHz;Duty Cycle: 1:2
Medium: H835_0421 Medium parameters used: f = 824.2 MHz; $\sigma$ = 0.879 S/m; $\varepsilon_r$ = 41.559; $\rho$ = 1000 kg/m$^3$
Ambient Temperature：23.2 ℃； Liquid Temperature：22.4 ℃

DASY5 Configuration:
- Probe: EX3DV4 - SN3873; ConvF(9.74, 9.74, 9.74); Calibrated: 2017/08/25;
- Sensor-Surface: 1.4mm (Mechanical Surface Detection)
- Electronics: DAE4 Sn1341; Calibrated: 2017/08/23
- Phantom: Left Phantom with CRP v5.0; Type: QD000P40CD; Serial: TP:1722
- Measurement SW: DASY52, Version 52.8 (8); SEMCAD X Version 14.6.10 (7331)

**- Area Scan (71x121x1):** Interpolated grid: dx=1.500 mm, dy=1.500 mm
Maximum value of SAR (interpolated) = 0.360 W/kg

**- Zoom Scan (5x5x7)/Cube 0:** Measurement grid: dx=8mm, dy=8mm, dz=5mm
Reference Value = 5.537 V/m; Power Drift = 0.07 dB
Peak SAR (extrapolated) = 0.373 W/kg
**SAR(1 g) = 0.303 W/kg; SAR(10 g) = 0.234 W/kg**
Maximum value of SAR (measured) = 0.351 W/kg

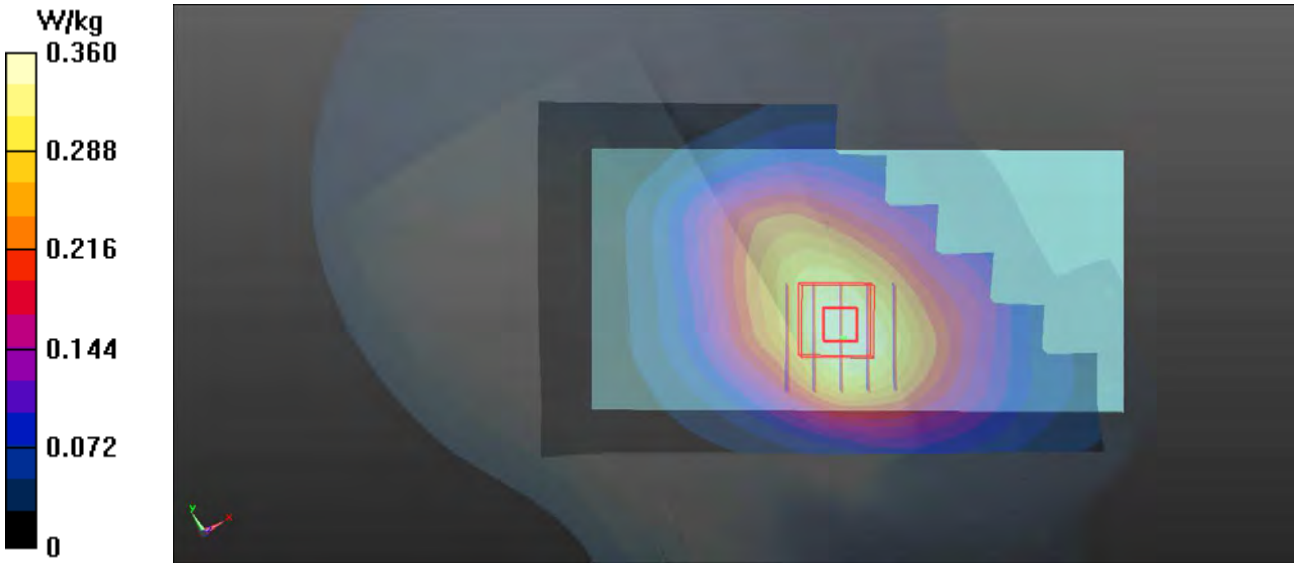

## P02 GSM1900_GPRS12_Right Cheek_Ch512

**DUT: 180412W003**

Communication System: GPRS12; Frequency: 1850.2 MHz;Duty Cycle: 1:2
Medium: H1900_0418 Medium parameters used: f = 1850.2 MHz; $\sigma$ = 1.392 S/m; $\varepsilon_r$ = 39.945; $\rho$ = 1000 kg/m$^3$
Ambient Temperature：23.4 ℃; Liquid Temperature：22.0 ℃

DASY5 Configuration:
- Probe: EX3DV4 - SN3873; ConvF(8.37, 8.37, 8.37); Calibrated: 2017/08/25;
- Sensor-Surface: 1.4mm (Mechanical Surface Detection)
- Electronics: DAE4 Sn1341; Calibrated: 2017/08/23
- Phantom: Front Phantom with CRP v5.0; Type: QD000P40CD; Serial: TP:1695
- Measurement SW: DASY52, Version 52.8 (8); SEMCAD X Version 14.6.10 (7331)

**- Area Scan (71x121x1):** Interpolated grid: dx=1.500 mm, dy=1.500 mm
Maximum value of SAR (interpolated) = 0.433 W/kg
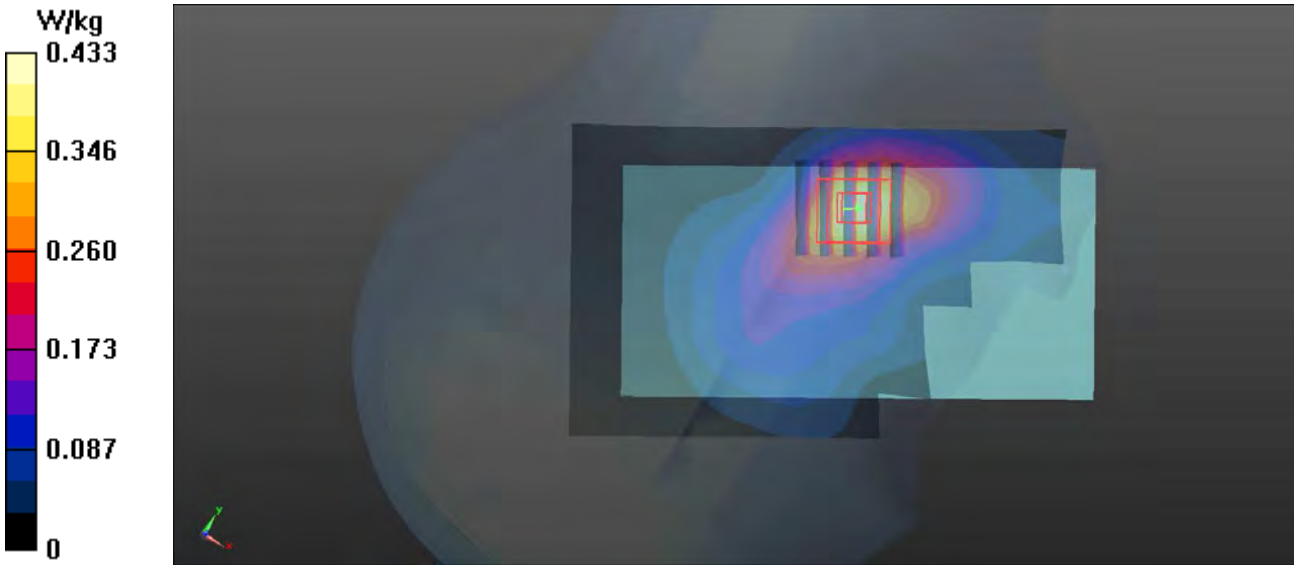
**- Zoom Scan (5x5x7)/Cube 0:** Measurement grid: dx=8mm, dy=8mm, dz=5mm
Reference Value = 3.372 V/m; Power Drift = 0.00 dB
Peak SAR (extrapolated) = 0.480 W/kg
**SAR(1 g) = 0.309 W/kg; SAR(10 g) = 0.193 W/kg**
Maximum value of SAR (measured) = 0.417 W/kg