Impedance Measurement Plot for Head TSL

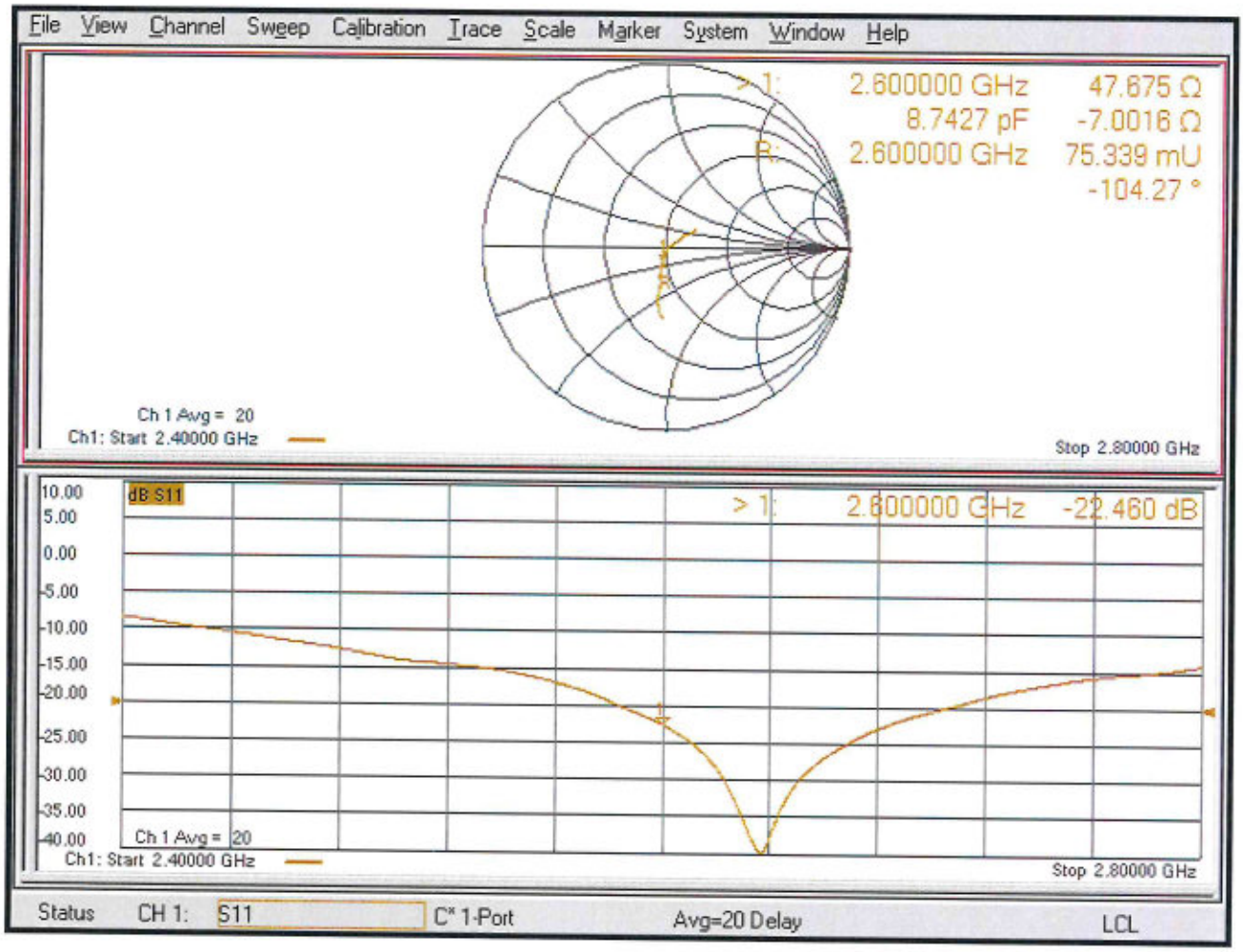

Calibration Laboratory of
Schmid & Partner
Engineering AG
Zeughausstrasse 43, 8004 Zurich, Switzerland

S Schweizerischer Kalibrierdienst
C Service suisse d'étalonnage
Servizio svizzero di taratura
S Swiss Calibration Service

Accredited by the Swiss Accreditation Service (SAS)
The Swiss Accreditation Service is one of the signatories to the EA Multilateral Agreement for the recognition of calibration certificates

Accreditation No.: SCS 0108

Client **Sporton**
Kunshan City

Certificate No. **D3500V2-1037_Nov23**

CALIBRATION CERTIFICATE

Object	D3500V2 - SN:1037
Calibration procedure(s)	QA CAL-22.v7 Calibration Procedure for SAR Validation Sources between 3-10 GHz
Calibration date:	November 20, 2023

This calibration certificate documents the traceability to national standards, which realize the physical units of measurements (SI).
The measurements and the uncertainties with confidence probability are given on the following pages and are part of the certificate.

All calibrations have been conducted in the closed laboratory facility: environment temperature (22 ± 3)°C and humidity < 70%.

Calibration Equipment used (M&TE critical for calibration)

Primary Standards	ID #	Cal Date (Certificate No.)	Scheduled Calibration
Power meter NRP2	SN: 104778	30-Mar-23 (No. 217-03804/03805)	Mar-24
Power sensor NRP-Z91	SN: 103244	30-Mar-23 (No. 217-03804)	Mar-24
Power sensor NRP-Z91	SN: 103245	30-Mar-23 (No. 217-03805)	Mar-24
Reference 20 dB Attenuator	SN: BH9394 (20k)	30-Mar-23 (No. 217-03809)	Mar-24
Type-N mismatch combination	SN: 310982 / 06327	30-Mar-23 (No. 217-03810)	Mar-24
Reference Probe EX3DV4	SN: 3503	07-Mar-23 (No. EX3-3503_Mar23)	Mar-24
DAE4	SN: 601	03-Oct-23 (No. DAE4-601_Oct23)	Oct-24

Secondary Standards	ID #	Check Date (in house)	Scheduled Check
Power meter E4419B	SN: GB39512475	30-Oct-14 (in house check Oct-22)	In house check: Oct-24
Power sensor HP 8481A	SN: US37292783	07-Oct-15 (in house check Oct-22)	In house check: Oct-24
Power sensor HP 8481A	SN: MY41093315	07-Oct-15 (in house check Oct-22)	In house check: Oct-24
RF generator R&S SMT-06	SN: 100972	15-Jun-15 (in house check Oct-22)	In house check: Oct-24
Network Analyzer Agilent E8358A	SN: US41080477	31-Mar-14 (in house check Oct-22)	In house check: Oct-24

	Name	Function	Signature
Calibrated by:	Paulo Pina	Laboratory Technician	
Approved by:	Sven Kühn	Technical Manager	

Issued: November 22, 2023

This calibration certificate shall not be reproduced except in full without written approval of the laboratory.

Calibration Laboratory of
Schmid & Partner
Engineering AG
Zeughausstrasse 43, 8004 Zurich, Switzerland

Accredited by the Swiss Accreditation Service (SAS)
The Swiss Accreditation Service is one of the signatories to the EA Multilateral Agreement for the recognition of calibration certificates

S Schweizerischer Kalibrierdienst
C Service suisse d'étalonnage
S Servizio svizzero di taratura
Swiss Calibration Service

Accreditation No.: **SCS 0108**

Glossary:

TSL	tissue simulating liquid
ConvF	sensitivity in TSL / NORM x,y,z
N/A	not applicable or not measured

Calibration is Performed According to the Following Standards:

a) IEC/IEEE 62209-1528, "Measurement Procedure For The Assessment Of Specific Absorption Rate Of Human Exposure To Radio Frequency Fields From Hand-Held And Body-Worn Wireless Communication Devices - Part 1528: Human Models, Instrumentation And Procedures (Frequency Range of 4 MHz to 10 GHz)", October 2020.
b) KDB 865664, "SAR Measurement Requirements for 100 MHz to 6 GHz"

Additional Documentation:

c) DASY System Handbook

Methods Applied and Interpretation of Parameters:

- *Measurement Conditions:* Further details are available from the Validation Report at the end of the certificate. All figures stated in the certificate are valid at the frequency indicated.
- *Antenna Parameters with TSL:* The source is mounted in a touch configuration below the center marking of the flat phantom.
- *Return Loss:* This parameter is measured with the source positioned under the liquid filled phantom (as described in the measurement condition clause). The Return Loss ensures low reflected power. No uncertainty required.
- *SAR measured:* SAR measured at the stated antenna input power.
- *SAR normalized:* SAR as measured, normalized to an input power of 1 W at the antenna connector.
- *SAR for nominal TSL parameters:* The measured TSL parameters are used to calculate the nominal SAR result.

The reported uncertainty of measurement is stated as the standard uncertainty of measurement multiplied by the coverage factor k=2, which for a normal distribution corresponds to a coverage probability of approximately 95%.

Measurement Conditions

DASY system configuration, as far as not given on page 1.

DASY Version	DASY52	V52.10.4
Extrapolation	Advanced Extrapolation	
Phantom	Modular Flat Phantom	
Distance Dipole Center - TSL	10 mm	with Spacer
Zoom Scan Resolution	dx, dy = 4 mm, dz = 1.4 mm	Graded Ratio = 1.4 (Z direction)
Frequency	3500 MHz ± 1 MHz	

Head TSL parameters

The following parameters and calculations were applied.

	Temperature	**Permittivity**	**Conductivity**
Nominal Head TSL parameters	22.0 °C	37.9	2.91 mho/m
Measured Head TSL parameters	(22.0 ± 0.2) °C	38.3 ± 6 %	2.91 mho/m ± 6 %
Head TSL temperature change during test	< 0.5 °C	----	----

SAR result with Head TSL

SAR averaged over 1 cm³ (1 g) of Head TSL	Condition	
SAR measured	100 mW input power	6.52 W/kg
SAR for nominal Head TSL parameters	normalized to 1W	**65.4 W/kg ± 19.9 % (k=2)**

SAR averaged over 10 cm³ (10 g) of Head TSL	condition	
SAR measured	100 mW input power	2.46 W/kg
SAR for nominal Head TSL parameters	normalized to 1W	**24.7 W/kg ± 19.5 % (k=2)**

Appendix (Additional assessments outside the scope of SCS 0108)

Antenna Parameters with Head TSL

Impedance, transformed to feed point	52.0 Ω - 1.1 jΩ
Return Loss	- 32.9 dB

General Antenna Parameters and Design

Electrical Delay (one direction)	1.142 ns

After long term use with 100W radiated power, only a slight warming of the dipole near the feedpoint can be measured.

The dipole is made of standard semirigid coaxial cable. The center conductor of the feeding line is directly connected to the second arm of the dipole. The antenna is therefore short-circuited for DC-signals. On some of the dipoles, small end caps are added to the dipole arms in order to improve matching when loaded according to the position as explained in the "Measurement Conditions" paragraph. The SAR data are not affected by this change. The overall dipole length is still according to the Standard.
No excessive force must be applied to the dipole arms, because they might bend or the soldered connections near the feedpoint may be damaged.

Additional EUT Data

Manufactured by	SPEAG

DASY5 Validation Report for Head TSL

Date: 20.11.2023

Test Laboratory: SPEAG, Zurich, Switzerland

DUT: Dipole 3500 MHz; Type: D3500V2; Serial: D3500V2 - SN:1037

Communication System: UID 0 - CW; Frequency: 3500 MHz
Medium parameters used: f = 3500 MHz; σ = 2.91 S/m; ε_r = 38.3; ρ = 1000 kg/m^3
Phantom section: Flat Section
Measurement Standard: DASY5 (IEEE/IEC/ANSI C63.19-2011)

DASY52 Configuration:

- Probe: EX3DV4 - SN3503; ConvF(7.91, 7.91, 7.91) @ 3500 MHz; Calibrated: 07.03.2023
- Sensor-Surface: 1.4mm (Mechanical Surface Detection)
- Electronics: DAE4 Sn601; Calibrated: 03.10.2023
- Phantom: Flat Phantom 5.0 (front); Type: QD000P50AA; Serial: 1001
- DASY52 52.10.4(1535); SEMCAD X 14.6.14(7501)

Dipole Calibration for Head Tissue/Pin=100 mW, d=10mm, f=3500MHz/Zoom Scan, dist=1.4mm (8x8x8)/Cube 0: Measurement grid: dx=4mm, dy=4mm, dz=1.4mm
Reference Value = 67.12 V/m; Power Drift = 0.08 dB
Peak SAR (extrapolated) = 16.8 W/kg
SAR(1 g) = 6.52 W/kg; SAR(10 g) = 2.46 W/kg
Smallest distance from peaks to all points 3 dB below = 8 mm
Ratio of SAR at M2 to SAR at M1 = 75.7%
Maximum value of SAR (measured) = 12.1 W/kg

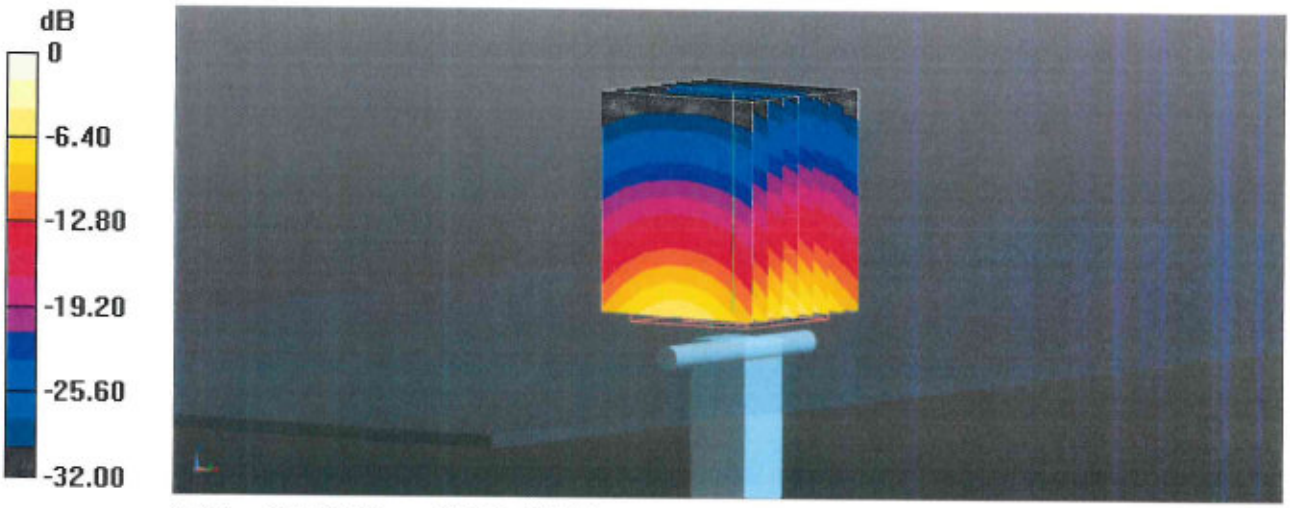

0 dB = 12.1 W/kg = 10.81 dBW/kg

Impedance Measurement Plot for Head TSL

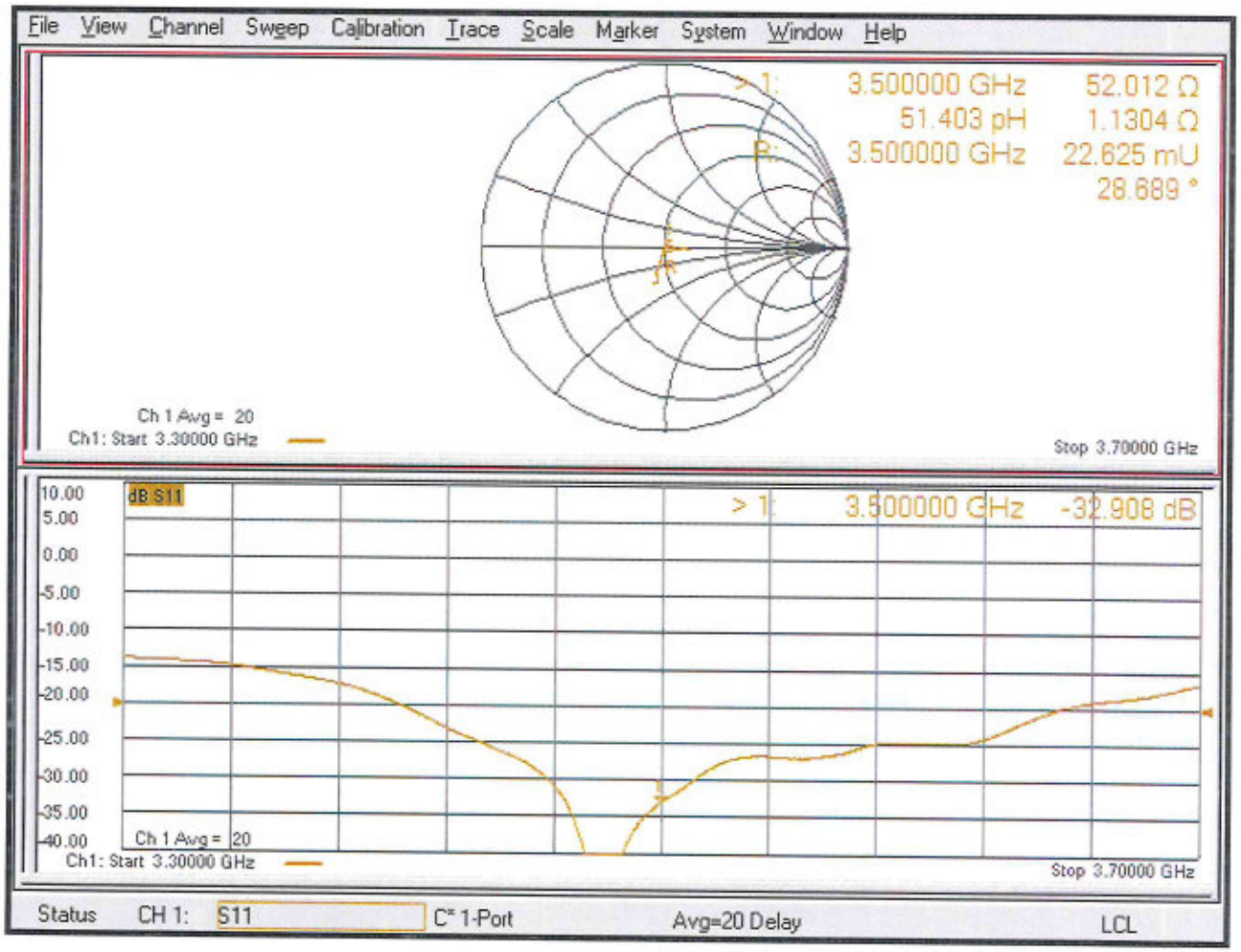

Calibration Laboratory of
Schmid & Partner
Engineering AG
Zeughausstrasse 43, 8004 Zurich, Switzerland

S Schweizerischer Kalibrierdienst
C Service suisse d'étalonnage
Servizio svizzero di taratura
S Swiss Calibration Service

Accredited by the Swiss Accreditation Service (SAS)
The Swiss Accreditation Service is one of the signatories to the EA Multilateral Agreement for the recognition of calibration certificates

Accreditation No.: SCS 0108

Client **Sporton**
Kunshan City

Certificate No. **D3700V2-1008_Nov23**

CALIBRATION CERTIFICATE

Object	D3700V2 - SN:1008
Calibration procedure(s)	QA CAL-22.v7 Calibration Procedure for SAR Validation Sources between 3-10 GHz
Calibration date:	November 20, 2023

This calibration certificate documents the traceability to national standards, which realize the physical units of measurements (SI).
The measurements and the uncertainties with confidence probability are given on the following pages and are part of the certificate.

All calibrations have been conducted in the closed laboratory facility: environment temperature (22 ± 3)°C and humidity < 70%.

Calibration Equipment used (M&TE critical for calibration)

Primary Standards	ID #	Cal Date (Certificate No.)	Scheduled Calibration
Power meter NRP2	SN: 104778	30-Mar-23 (No. 217-03804/03805)	Mar-24
Power sensor NRP-Z91	SN: 103244	30-Mar-23 (No. 217-03804)	Mar-24
Power sensor NRP-Z91	SN: 103245	30-Mar-23 (No. 217-03805)	Mar-24
Reference 20 dB Attenuator	SN: BH9394 (20k)	30-Mar-23 (No. 217-03809)	Mar-24
Type-N mismatch combination	SN: 310982 / 06327	30-Mar-23 (No. 217-03810)	Mar-24
Reference Probe EX3DV4	SN: 3503	07-Mar-23 (No. EX3-3503_Mar23)	Mar-24
DAE4	SN: 601	03-Oct-23 (No. DAE4-601_Oct23)	Oct-24

Secondary Standards	ID #	Check Date (in house)	Scheduled Check
Power meter E4419B	SN: GB39512475	30-Oct-14 (in house check Oct-22)	In house check: Oct-24
Power sensor HP 8481A	SN: US37292783	07-Oct-15 (in house check Oct-22)	In house check: Oct-24
Power sensor HP 8481A	SN: MY41093315	07-Oct-15 (in house check Oct-22)	In house check: Oct-24
RF generator R&S SMT-06	SN: 100972	15-Jun-15 (in house check Oct-22)	In house check: Oct-24
Network Analyzer Agilent E8358A	SN: US41080477	31-Mar-14 (in house check Oct-22)	In house check: Oct-24

	Name	Function	Signature
Calibrated by:	Paulo Pina	Laboratory Technician	
Approved by:	Sven Kühn	Technical Manager	

Issued: November 21, 2023

This calibration certificate shall not be reproduced except in full without written approval of the laboratory.

Calibration Laboratory of
Schmid & Partner
Engineering AG
Zeughausstrasse 43, 8004 Zurich, Switzerland

Accredited by the Swiss Accreditation Service (SAS)
The Swiss Accreditation Service is one of the signatories to the EA Multilateral Agreement for the recognition of calibration certificates

S Schweizerischer Kalibrierdienst
C Service suisse d'étalonnage
S Servizio svizzero di taratura
Swiss Calibration Service

Accreditation No.: SCS 0108

Glossary:

TSL	tissue simulating liquid
ConvF	sensitivity in TSL / NORM x,y,z
N/A	not applicable or not measured

Calibration is Performed According to the Following Standards:

a) IEC/IEEE 62209-1528, "Measurement Procedure For The Assessment Of Specific Absorption Rate Of Human Exposure To Radio Frequency Fields From Hand-Held And Body-Worn Wireless Communication Devices - Part 1528: Human Models, Instrumentation And Procedures (Frequency Range of 4 MHz to 10 GHz)", October 2020.
b) KDB 865664, "SAR Measurement Requirements for 100 MHz to 6 GHz"

Additional Documentation:

c) DASY System Handbook

Methods Applied and Interpretation of Parameters:

- *Measurement Conditions:* Further details are available from the Validation Report at the end of the certificate. All figures stated in the certificate are valid at the frequency indicated.
- *Antenna Parameters with TSL:* The source is mounted in a touch configuration below the center marking of the flat phantom.
- *Return Loss:* This parameter is measured with the source positioned under the liquid filled phantom (as described in the measurement condition clause). The Return Loss ensures low reflected power. No uncertainty required.
- *SAR measured:* SAR measured at the stated antenna input power.
- *SAR normalized:* SAR as measured, normalized to an input power of 1 W at the antenna connector.
- *SAR for nominal TSL parameters:* The measured TSL parameters are used to calculate the nominal SAR result.

The reported uncertainty of measurement is stated as the standard uncertainty of measurement multiplied by the coverage factor k=2, which for a normal distribution corresponds to a coverage probability of approximately 95%.

Measurement Conditions

DASY system configuration, as far as not given on page 1.

DASY Version	DASY52	V52.10.4
Extrapolation	Advanced Extrapolation	
Phantom	Modular Flat Phantom	
Distance Dipole Center - TSL	10 mm	with Spacer
Zoom Scan Resolution	dx, dy = 4 mm, dz = 1.4 mm	Graded Ratio = 1.4 (Z direction)
Frequency	3700 MHz ± 1 MHz	

Head TSL parameters

The following parameters and calculations were applied.

	Temperature	**Permittivity**	**Conductivity**
Nominal Head TSL parameters	22.0 °C	37.7	3.12 mho/m
Measured Head TSL parameters	(22.0 ± 0.2) °C	38.1 ± 6 %	3.06 mho/m ± 6 %
Head TSL temperature change during test	< 0.5 °C	----	----

SAR result with Head TSL

SAR averaged over 1 cm³ (1 g) of Head TSL	Condition	
SAR measured	100 mW input power	6.67 W/kg
SAR for nominal Head TSL parameters	normalized to 1W	**67.2 W/kg ± 19.9 % (k=2)**

SAR averaged over 10 cm³ (10 g) of Head TSL	condition	
SAR measured	100 mW input power	2.43 W/kg
SAR for nominal Head TSL parameters	normalized to 1W	**24.4 W/kg ± 19.5 % (k=2)**

Appendix (Additional assessments outside the scope of SCS 0108)

Antenna Parameters with Head TSL

Impedance, transformed to feed point	49.5 Ω - 5.8 jΩ
Return Loss	- 24.7 dB

General Antenna Parameters and Design

Electrical Delay (one direction)	1.139 ns

After long term use with 100W radiated power, only a slight warming of the dipole near the feedpoint can be measured.

The dipole is made of standard semirigid coaxial cable. The center conductor of the feeding line is directly connected to the second arm of the dipole. The antenna is therefore short-circuited for DC-signals. On some of the dipoles, small end caps are added to the dipole arms in order to improve matching when loaded according to the position as explained in the "Measurement Conditions" paragraph. The SAR data are not affected by this change. The overall dipole length is still according to the Standard.
No excessive force must be applied to the dipole arms, because they might bend or the soldered connections near the feedpoint may be damaged.

Additional EUT Data

Manufactured by	SPEAG

DASY5 Validation Report for Head TSL

Date: 20.11.2023

Test Laboratory: SPEAG, Zurich, Switzerland

DUT: Dipole 3700 MHz; Type: D3700V2; Serial: D3700V2 - SN:1008

Communication System: UID 0 - CW; Frequency: 3700 MHz
Medium parameters used: f = 3700 MHz; σ = 3.06 S/m; ε_r = 38.1; ρ = 1000 kg/m^3
Phantom section: Flat Section
Measurement Standard: DASY5 (IEEE/IEC/ANSI C63.19-2011)

DASY52 Configuration:

- Probe: EX3DV4 - SN3503; ConvF(7.73, 7.73, 7.73) @ 3700 MHz; Calibrated: 07.03.2023
- Sensor-Surface: 1.4mm (Mechanical Surface Detection)
- Electronics: DAE4 Sn601; Calibrated: 03.10.2023
- Phantom: Flat Phantom 5.0 (front); Type: QD000P50AA; Serial: 1001
- DASY52 52.10.4(1535); SEMCAD X 14.6.14(7501)

Dipole Calibration for Head Tissue/Pin=100 mW, d=10mm, f=3700MHz/Zoom Scan, dist=1.4mm (8x8x8)/Cube 0: Measurement grid: dx=4mm, dy=4mm, dz=1.4mm
Reference Value = 68.55 V/m; Power Drift = 0.08 dB
Peak SAR (extrapolated) = 18.3 W/kg
SAR(1 g) = 6.67 W/kg; SAR(10 g) = 2.43 W/kg
Smallest distance from peaks to all points 3 dB below = 8 mm
Ratio of SAR at M2 to SAR at M1 = 74.5%
Maximum value of SAR (measured) = 13.0 W/kg

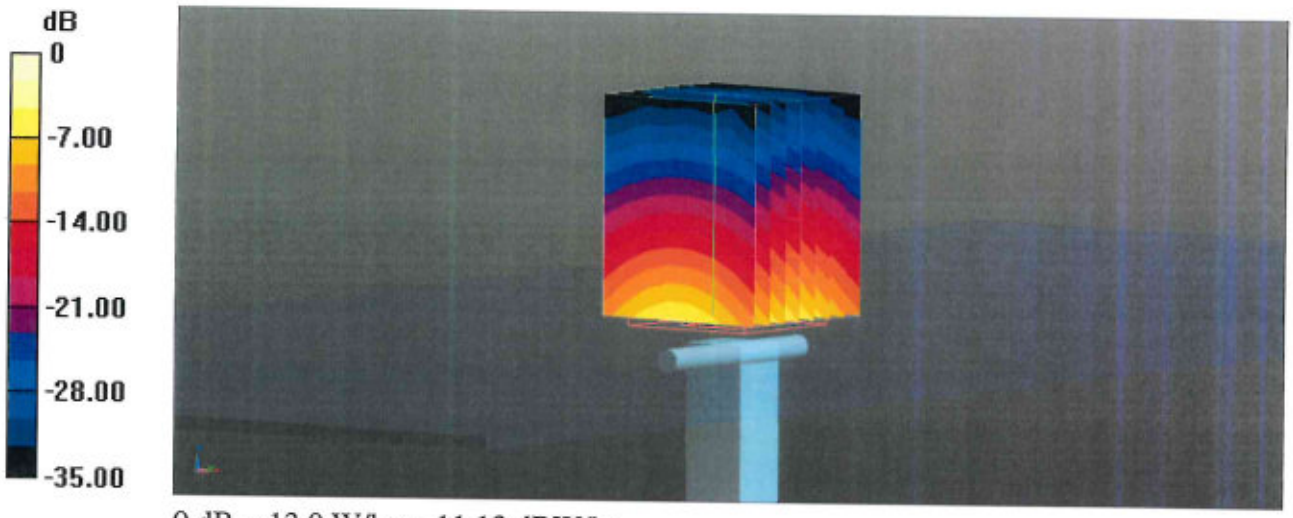

0 dB = 13.0 W/kg = 11.13 dBW/kg

Impedance Measurement Plot for Head TSL

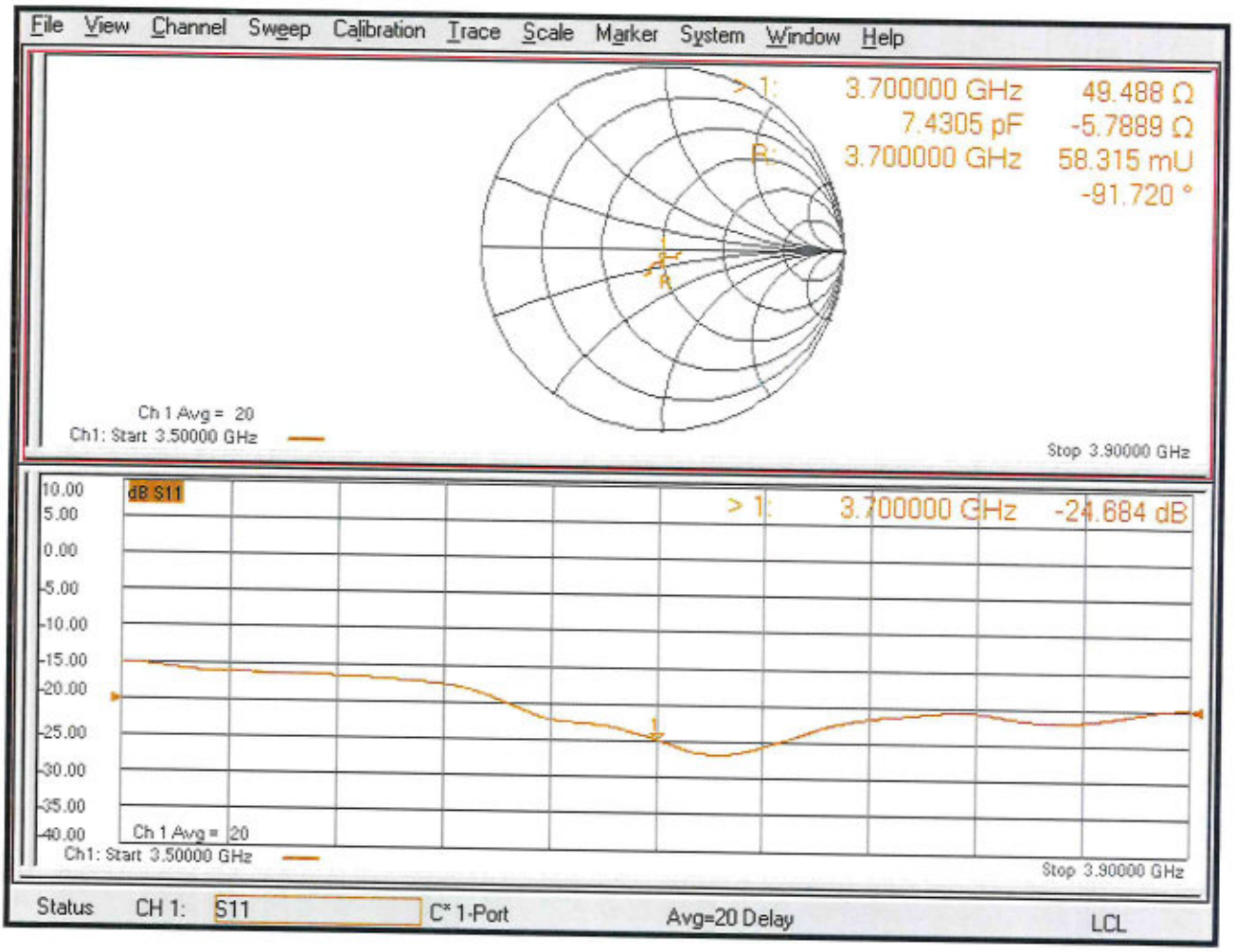

Calibration Laboratory of
Schmid & Partner
Engineering AG
Zeughausstrasse 43, 8004 Zurich, Switzerland

S Schweizerischer Kalibrierdienst
C Service suisse d'étalonnage
Servizio svizzero di taratura
S Swiss Calibration Service

Accredited by the Swiss Accreditation Service (SAS)
The Swiss Accreditation Service is one of the signatories to the EA Multilateral Agreement for the recognition of calibration certificates

Accreditation No.: SCS 0108

Client **Sporton**
Kunshan City, China

Certificate No. **D3900V2-1048_Mar23**

CALIBRATION CERTIFICATE

Object	D3900V2 - SN:1048
Calibration procedure(s)	QA CAL-22.v7 Calibration Procedure for SAR Validation Sources between 3-10 GHz
Calibration date:	March 09, 2023

This calibration certificate documents the traceability to national standards, which realize the physical units of measurements (SI).
The measurements and the uncertainties with confidence probability are given on the following pages and are part of the certificate.

All calibrations have been conducted in the closed laboratory facility: environment temperature (22 ± 3)°C and humidity < 70%.

Calibration Equipment used (M&TE critical for calibration)

Primary Standards	ID #	Cal Date (Certificate No.)	Scheduled Calibration
Power meter NRP	SN: 104778	04-Apr-22 (No. 217-03525/03524)	Apr-23
Power sensor NRP-Z91	SN: 103244	04-Apr-22 (No. 217-03524)	Apr-23
Power sensor NRP-Z91	SN: 103245	04-Apr-22 (No. 217-03525)	Apr-23
Reference 20 dB Attenuator	SN: BH9394 (20k)	04-Apr-22 (No. 217-03527)	Apr-23
Type-N mismatch combination	SN: 310982 / 06327	04-Apr-22 (No. 217-03528)	Apr-23
Reference Probe EX3DV4	SN: 3503	07-Mar-23 (No. EX3-3503_Mar23)	Mar-24
DAE4	SN: 601	19-Dec-22 (No. DAE4-601_Dec22)	Dec-23

Secondary Standards	ID #	Check Date (in house)	Scheduled Check
Power meter E4419B	SN: GB39512475	30-Oct-14 (in house check Oct-22)	In house check: Oct-24
Power sensor HP 8481A	SN: US37292783	07-Oct-15 (in house check Oct-22)	In house check: Oct-24
Power sensor HP 8481A	SN: MY41093315	07-Oct-15 (in house check Oct-22)	In house check: Oct-24
RF generator R&S SMT-06	SN: 100972	15-Jun-15 (in house check Oct-22)	In house check: Oct-24
Network Analyzer Agilent E8358A	SN: US41080477	31-Mar-14 (in house check Oct-22)	In house check: Oct-24

	Name	Function	Signature
Calibrated by:	Jeton Kastrati	Laboratory Technician	
Approved by:	Sven Kühn	Technical Manager	

Issued: March 21, 2023

This calibration certificate shall not be reproduced except in full without written approval of the laboratory.

Calibration Laboratory of
Schmid & Partner
Engineering AG
Zeughausstrasse 43, 8004 Zurich, Switzerland

S Schweizerischer Kalibrierdienst
C Service suisse d'étalonnage
Servizio svizzero di taratura
S Swiss Calibration Service

Accredited by the Swiss Accreditation Service (SAS)
The Swiss Accreditation Service is one of the signatories to the EA Multilateral Agreement for the recognition of calibration certificates

Accreditation No.: SCS 0108

Glossary:

TSL	tissue simulating liquid
ConvF	sensitivity in TSL / NORM x,y,z
N/A	not applicable or not measured

Calibration is Performed According to the Following Standards:

a) IEC/IEEE 62209-1528, "Measurement Procedure For The Assessment Of Specific Absorption Rate Of Human Exposure To Radio Frequency Fields From Hand-Held And Body-Worn Wireless Communication Devices - Part 1528: Human Models, Instrumentation And Procedures (Frequency Range of 4 MHz to 10 GHz)", October 2020.
b) KDB 865664, "SAR Measurement Requirements for 100 MHz to 6 GHz"

Additional Documentation:

c) DASY System Handbook

Methods Applied and Interpretation of Parameters:

- *Measurement Conditions:* Further details are available from the Validation Report at the end of the certificate. All figures stated in the certificate are valid at the frequency indicated.
- *Antenna Parameters with TSL:* The source is mounted in a touch configuration below the center marking of the flat phantom.
- *Return Loss:* This parameter is measured with the source positioned under the liquid filled phantom (as described in the measurement condition clause). The Return Loss ensures low reflected power. No uncertainty required.
- *SAR measured:* SAR measured at the stated antenna input power.
- *SAR normalized:* SAR as measured, normalized to an input power of 1 W at the antenna connector.
- *SAR for nominal TSL parameters:* The measured TSL parameters are used to calculate the nominal SAR result.

The reported uncertainty of measurement is stated as the standard uncertainty of measurement multiplied by the coverage factor k=2, which for a normal distribution corresponds to a coverage probability of approximately 95%.

Measurement Conditions

DASY system configuration, as far as not given on page 1.

DASY Version	DASY52	V52.10.4
Extrapolation	Advanced Extrapolation	
Phantom	Modular Flat Phantom V5.0	
Distance Dipole Center - TSL	10 mm	with Spacer
Zoom Scan Resolution	dx, dy = 4.0 mm, dz = 1.4 mm	Graded Ratio = 1.4 (Z direction)
Frequency	3900 MHz ± 1 MHz 4100 MHz ± 1 MHz	

Head TSL parameters at 3900 MHz

The following parameters and calculations were applied.

	Temperature	**Permittivity**	**Conductivity**
Nominal Head TSL parameters	22.0 °C	37.5	3.32 mho/m
Measured Head TSL parameters	(22.0 ± 0.2) °C	37.3 ± 6 %	3.23 mho/m ± 6 %
Head TSL temperature change during test	< 0.5 °C	----	----

SAR result with Head TSL at 3900 MHz

SAR averaged over 1 cm³ (1 g) of Head TSL	Condition	
SAR measured	100 mW input power	6.88 W/kg
SAR for nominal Head TSL parameters	normalized to 1W	**69.1 W/kg ± 19.9 % (k=2)**

SAR averaged over 10 cm³ (10 g) of Head TSL	condition	
SAR measured	100 mW input power	2.41 W/kg
SAR for nominal Head TSL parameters	normalized to 1W	**24.1 W/kg ± 19.5 % (k=2)**

Head TSL parameters at 4100 MHz

The following parameters and calculations were applied.

	Temperature	**Permittivity**	**Conductivity**
Nominal Head TSL parameters	22.0 °C	37.2	3.53 mho/m
Measured Head TSL parameters	(22.0 ± 0.2) °C	37.1 ± 6 %	3.41 mho/m ± 6 %
Head TSL temperature change during test	< 0.5 °C	----	----

SAR result with Head TSL at 4100 MHz

SAR averaged over 1 cm³ (1 g) of Head TSL	Condition	
SAR measured	100 mW input power	6.68 W/kg
SAR for nominal Head TSL parameters	normalized to 1W	**67.0 W/kg ± 19.9 % (k=2)**

SAR averaged over 10 cm³ (10 g) of Head TSL	condition	
SAR measured	100 mW input power	2.33 W/kg
SAR for nominal Head TSL parameters	normalized to 1W	**23.3 W/kg ± 19.5 % (k=2)**

Appendix (Additional assessments outside the scope of SCS 0108)

Antenna Parameters with Head TSL at 3900 MHz

Impedance, transformed to feed point	47.3 Ω - 3.3 jΩ
Return Loss	- 27.3 dB

Antenna Parameters with Head TSL at 4100 MHz

Impedance, transformed to feed point	59.7 Ω + 0.1 jΩ
Return Loss	- 21.1 dB

General Antenna Parameters and Design

Electrical Delay (one direction)	1.104 ns

After long term use with 100W radiated power, only a slight warming of the dipole near the feedpoint can be measured.

The dipole is made of standard semirigid coaxial cable. The center conductor of the feeding line is directly connected to the second arm of the dipole. The antenna is therefore short-circuited for DC-signals. On some of the dipoles, small end caps are added to the dipole arms in order to improve matching when loaded according to the position as explained in the "Measurement Conditions" paragraph. The SAR data are not affected by this change. The overall dipole length is still according to the Standard.
No excessive force must be applied to the dipole arms, because they might bend or the soldered connections near the feedpoint may be damaged.

Additional EUT Data

Manufactured by	SPEAG

DASY5 Validation Report for Head TSL

Date: 09.03.2023

Test Laboratory: SPEAG, Zurich, Switzerland

DUT: Dipole 3900 MHz; Type: D3900V2; Serial: D3900V2 - SN:1048

Communication System: UID 0 - CW; Frequency: 3900 MHz, Frequency: 4100 MHz
Medium parameters used: f = 3900 MHz; σ = 3.23 S/m; ε_r = 37.3; ρ = 1000 kg/m^3 ,
Medium parameters used: f = 4100 MHz; σ = 3.41 S/m; ε_r = 37.1; ρ = 1000 kg/m^3
Phantom section: Flat Section
Measurement Standard: DASY5 (IEEE/IEC/ANSI C63.19-2011)

DASY52 Configuration:

- Probe: EX3DV4 - SN3503; ConvF(7.39, 7.39, 7.39) @ 3900 MHz, ConvF(7.26, 7.26, 7.26) @ 4100 MHz; Calibrated: 07.03.2023
- Sensor-Surface: 1.4mm (Mechanical Surface Detection)
- Electronics: DAE4 Sn601; Calibrated: 19.12.2022
- Phantom: Flat Phantom 5.0 (front); Type: QD 000 P50 AA; Serial: 1001
- DASY52 52.10.4(1535); SEMCAD X 14.6.14(7501)

Dipole Calibration for Head Tissue/Pin=100 mW, d=10mm, f=3900MHz/Zoom Scan, dist=1.4mm (8x8x8)/Cube 0: Measurement grid: dx=4mm, dy=4mm, dz=1.4mm
Reference Value = 69.78 V/m; Power Drift = -0.02 dB
Peak SAR (extrapolated) = 19.2 W/kg
SAR(1 g) = 6.88 W/kg; SAR(10 g) = 2.41 W/kg
Smallest distance from peaks to all points 3 dB below = 8 mm
Ratio of SAR at M2 to SAR at M1 = 74.4%
Maximum value of SAR (measured) = 13.5 W/kg

Dipole Calibration for Head Tissue/Pin=100 mW, d=10mm, f=4100MHz/Zoom Scan, dist=1.4mm (8x8x8)/Cube 0: Measurement grid: dx=4mm, dy=4mm, dz=1.4mm
Reference Value = 67.74 V/m; Power Drift = -0.01 dB
Peak SAR (extrapolated) = 18.8 W/kg
SAR(1 g) = 6.68 W/kg; SAR(10 g) = 2.33 W/kg
Smallest distance from peaks to all points 3 dB below = 8 mm
Ratio of SAR at M2 to SAR at M1 = 74.1%
Maximum value of SAR (measured) = 13.3 W/kg

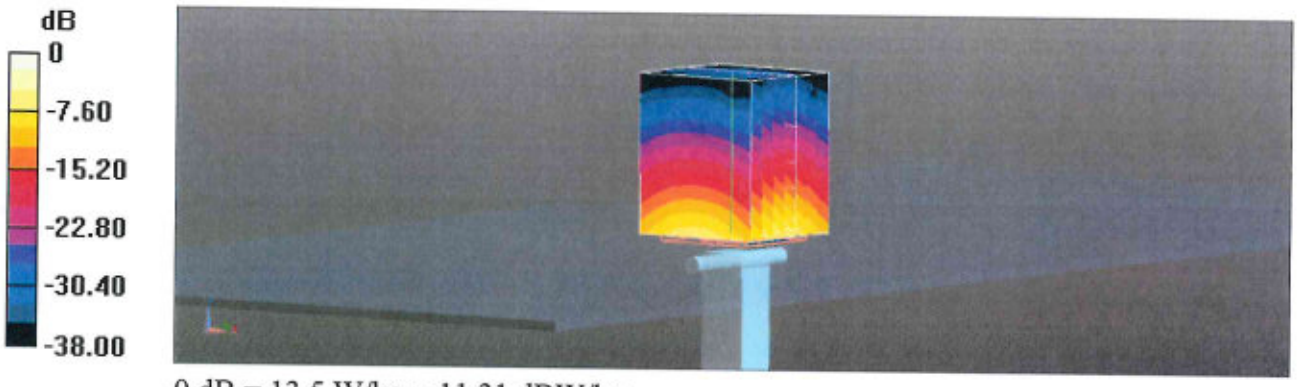

0 dB = 13.5 W/kg = 11.31 dBW/kg

Impedance Measurement Plot for Head TSL

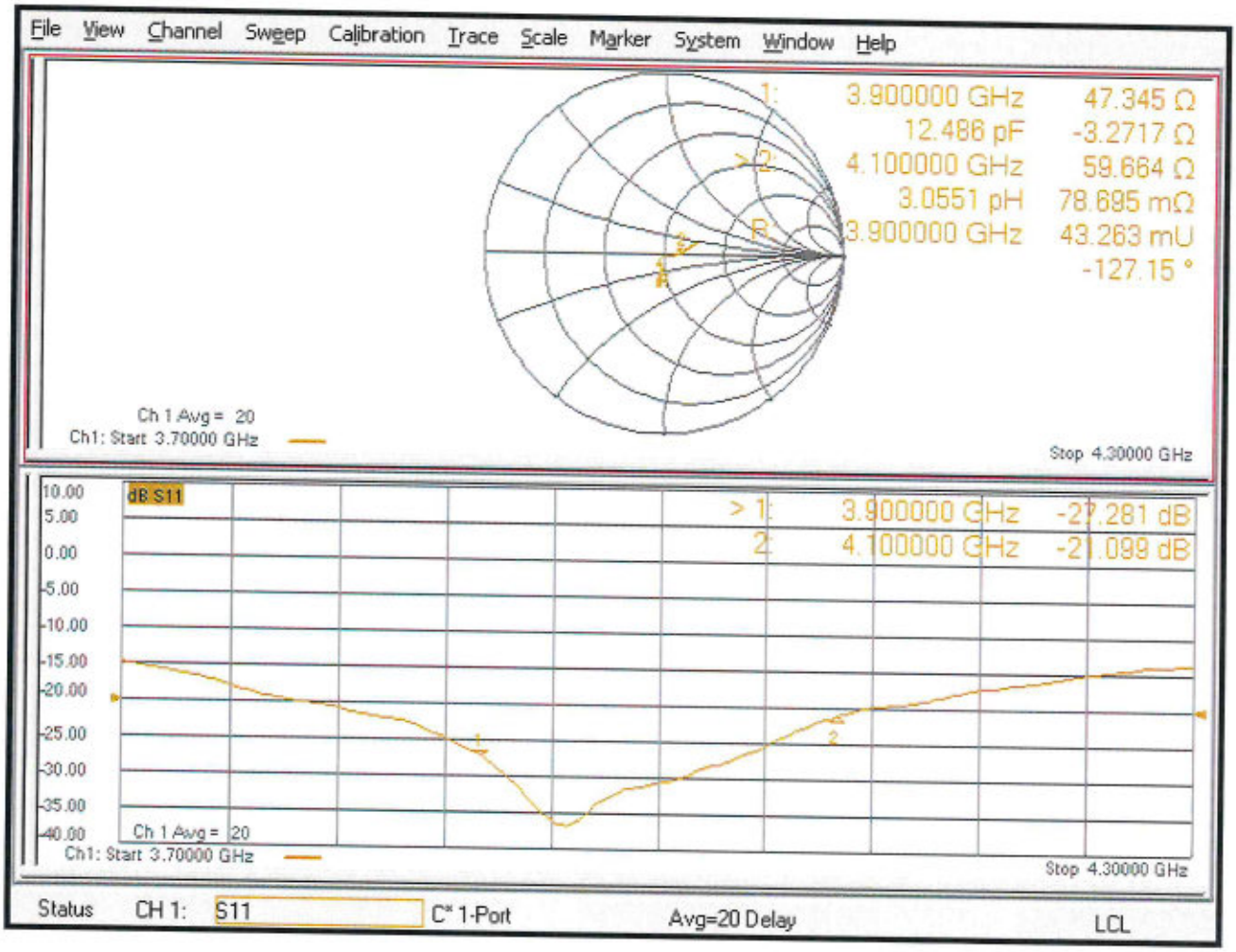

D3900V2, Serial No. 1048 Extended Dipole Calibrations

If dipoles are verified in return loss (<-20dB, within 20% of prior calibration), and in impedance (within 5 ohm of prior calibration), the annual calibration is not necessary and the calibration interval can be extended.

D3900V2 – serial no. 1048						
	3900 Head					
Date of Measurement	Return-Loss (dB)	Delta (%)	Real Impedance (ohm)	Delta (ohm)	Imaginary Impedance (ohm)	Delta (ohm)
2023.3.9	-27.281		47.345		-3.2717	
2024.3.8	-24.492	-10.22	47.733	-0.388	-5.7212	2.4495

D3900V2 – serial no. 1048						
	4100 Head					
Date of Measurement	Return-Loss (dB)	Delta (%)	Real Impedance (ohm)	Delta (ohm)	Imaginary Impedance (ohm)	Delta (ohm)
2023.3.9	-21.099		59.664		0.078695	
2024.3.8	-21.721	2.95	58.764	0.9	0.18556	-0.106865

<Justification of the extended calibration>

The return loss is < -20dB, within 20% of prior calibration; the impedance is within 5 ohm of prior calibration. Therefore the verification result should support extended calibration.

Dipole Verification Data> D3900V2, serial no. 1048

3900MHz&4100Mhz – Head

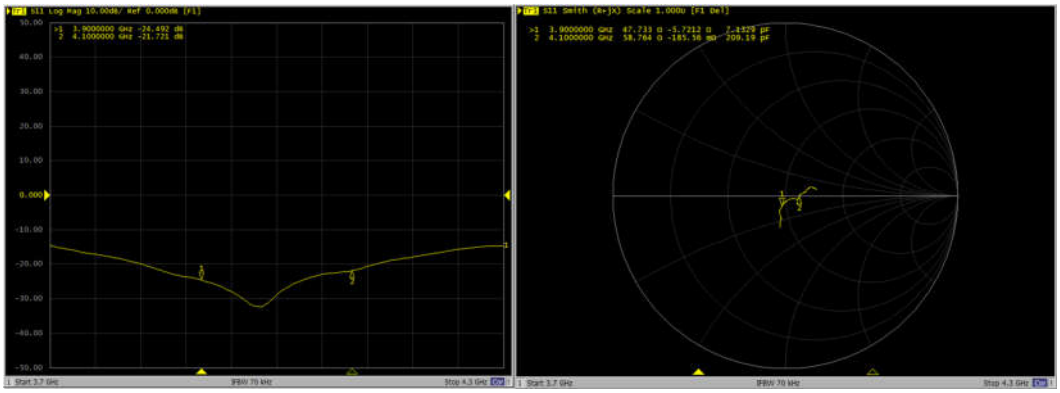

Calibration Laboratory of
Schmid & Partner
Engineering AG
Zeughausstrasse 43, 8004 Zurich, Switzerland

S Schweizerischer Kalibrierdienst
C Service suisse d'étalonnage
Servizio svizzero di taratura
S Swiss Calibration Service

Accredited by the Swiss Accreditation Service (SAS)
The Swiss Accreditation Service is one of the signatories to the EA Multilateral Agreement for the recognition of calibration certificates

Accreditation No.: SCS 0108

Client **Sporton**

Certificate No: D5GHzV2-1113_Sep22

CALIBRATION CERTIFICATE

Object	D5GHzV2 - SN:1113
Calibration procedure(s)	QA CAL-22.v6 Calibration Procedure for SAR Validation Sources between 3-10 GHz
Calibration date:	September 23, 2022

This calibration certificate documents the traceability to national standards, which realize the physical units of measurements (SI). The measurements and the uncertainties with confidence probability are given on the following pages and are part of the certificate.

All calibrations have been conducted in the closed laboratory facility: environment temperature (22 ± 3)°C and humidity < 70%.

Calibration Equipment used (M&TE critical for calibration)

Primary Standards	ID #	Cal Date (Certificate No.)	Scheduled Calibration
Power meter NRP	SN: 104778	04-Apr-22 (No. 217-03525/03524)	Apr-23
Power sensor NRP-Z91	SN: 103244	04-Apr-22 (No. 217-03524)	Apr-23
Power sensor NRP-Z91	SN: 103245	04-Apr-22 (No. 217-03525)	Apr-23
Reference 20 dB Attenuator	SN: BH9394 (20k)	04-Apr-22 (No. 217-03527)	Apr-23
Type-N mismatch combination	SN: 310982 / 06327	04-Apr-22 (No. 217-03528)	Apr-23
Reference Probe EX3DV4	SN: 3503	08-Mar-22 (No. EX3-3503_Mar22)	Mar-23
DAE4	SN: 601	31-Aug-22 (No. DAE4-601_Aug22)	Aug-23

Secondary Standards	ID #	Check Date (in house)	Scheduled Check
Power meter E4419B	SN: GB39512475	30-Oct-14 (in house check Oct-20)	In house check: Oct-22
Power sensor HP 8481A	SN: US37292783	07-Oct-15 (in house check Oct-20)	In house check: Oct-22
Power sensor HP 8481A	SN: MY41093315	07-Oct-15 (in house check Oct-20)	In house check: Oct-22
RF generator R&S SMT-06	SN: 100972	15-Jun-15 (in house check Oct-20)	In house check: Oct-22
Network Analyzer Agilent E8358A	SN: US41080477	31-Mar-14 (in house check Oct-20)	In house check: Oct-22

	Name	Function	Signature
Calibrated by:	Leif Klysner	Laboratory Technician	
Approved by:	Sven Kühn	Technical Manager	

Issued: September 26, 2022

This calibration certificate shall not be reproduced except in full without written approval of the laboratory.

Calibration Laboratory of
Schmid & Partner
Engineering AG
Zeughausstrasse 43, 8004 Zurich, Switzerland

S Schweizerischer Kalibrierdienst
C Service suisse d'étalonnage
Servizio svizzero di taratura
S Swiss Calibration Service

Accredited by the Swiss Accreditation Service (SAS)
The Swiss Accreditation Service is one of the signatories to the EA Multilateral Agreement for the recognition of calibration certificates

Accreditation No.: SCS 0108

Glossary:

TSL	tissue simulating liquid
ConvF	sensitivity in TSL / NORM x,y,z
N/A	not applicable or not measured

Calibration is Performed According to the Following Standards:

a) IEC/IEEE 62209-1528, "Measurement Procedure For The Assessment Of Specific Absorption Rate Of Human Exposure To Radio Frequency Fields From Hand-Held And Body-Worn Wireless Communication Devices - Part 1528: Human Models, Instrumentation And Procedures (Frequency Range of 4 MHz to 10 GHz)", October 2020.
b) KDB 865664, "SAR Measurement Requirements for 100 MHz to 6 GHz"

Additional Documentation:

c) DASY System Handbook

Methods Applied and Interpretation of Parameters:

- *Measurement Conditions:* Further details are available from the Validation Report at the end of the certificate. All figures stated in the certificate are valid at the frequency indicated.
- *Antenna Parameters with TSL:* The source is mounted in a touch configuration below the center marking of the flat phantom.
- *Return Loss:* This parameter is measured with the source positioned under the liquid filled phantom (as described in the measurement condition clause). The Return Loss ensures low reflected power. No uncertainty required.
- *SAR measured:* SAR measured at the stated antenna input power.
- *SAR normalized:* SAR as measured, normalized to an input power of 1 W at the antenna connector.
- *SAR for nominal TSL parameters:* The measured TSL parameters are used to calculate the nominal SAR result.

The reported uncertainty of measurement is stated as the standard uncertainty of measurement multiplied by the coverage factor k=2, which for a normal distribution corresponds to a coverage probability of approximately 95%.

Measurement Conditions

DASY system configuration, as far as not given on page 1.

DASY Version	DASY52	V52.10.4
Extrapolation	Advanced Extrapolation	
Phantom	Modular Flat Phantom V5.0	
Distance Dipole Center - TSL	10 mm	with Spacer
Zoom Scan Resolution	dx, dy = 4.0 mm, dz = 1.4 mm	Graded Ratio = 1.4 (Z direction)
Frequency	5250 MHz ± 1 MHz 5600 MHz ± 1 MHz 5750 MHz ± 1 MHz	

Head TSL parameters at 5250 MHz

The following parameters and calculations were applied.

	Temperature	**Permittivity**	**Conductivity**
Nominal Head TSL parameters	22.0 °C	35.9	4.71 mho/m
Measured Head TSL parameters	(22.0 ± 0.2) °C	35.4 ± 6 %	4.60 mho/m ± 6 %
Head TSL temperature change during test	< 0.5 °C	----	----

SAR result with Head TSL at 5250 MHz

SAR averaged over 1 cm³ (1 g) of Head TSL	Condition	
SAR measured	100 mW input power	8.18 W/kg
SAR for nominal Head TSL parameters	normalized to 1W	**81.5 W/kg ± 19.9 % (k=2)**

SAR averaged over 10 cm³ (10 g) of Head TSL	condition	
SAR measured	100 mW input power	2.35 W/kg
SAR for nominal Head TSL parameters	normalized to 1W	**23.3 W/kg ± 19.5 % (k=2)**

Head TSL parameters at 5600 MHz

The following parameters and calculations were applied.

	Temperature	**Permittivity**	**Conductivity**
Nominal Head TSL parameters	22.0 °C	35.5	5.07 mho/m
Measured Head TSL parameters	(22.0 ± 0.2) °C	34.9 ± 6 %	4.95 mho/m ± 6 %
Head TSL temperature change during test	< 0.5 °C	----	----

SAR result with Head TSL at 5600 MHz

SAR averaged over 1 cm³ (1 g) of Head TSL	Condition	
SAR measured	100 mW input power	8.30 W/kg
SAR for nominal Head TSL parameters	normalized to 1W	**82.6 W/kg ± 19.9 % (k=2)**

SAR averaged over 10 cm³ (10 g) of Head TSL	condition	
SAR measured	100 mW input power	2.38 W/kg
SAR for nominal Head TSL parameters	normalized to 1W	**23.7 W/kg ± 19.5 % (k=2)**

Head TSL parameters at 5750 MHz

The following parameters and calculations were applied.

	Temperature	Permittivity	Conductivity
Nominal Head TSL parameters	22.0 °C	35.4	5.22 mho/m
Measured Head TSL parameters	(22.0 ± 0.2) °C	34.7 ± 6 %	5.11 mho/m ± 6 %
Head TSL temperature change during test	< 0.5 °C	----	----

SAR result with Head TSL at 5750 MHz

SAR averaged over 1 cm³ (1 g) of Head TSL	Condition	
SAR measured	100 mW input power	8.12 W/kg
SAR for nominal Head TSL parameters	normalized to 1W	**80.8 W/kg ± 19.9 % (k=2)**

SAR averaged over 10 cm³ (10 g) of Head TSL	condition	
SAR measured	100 mW input power	2.32 W/kg
SAR for nominal Head TSL parameters	normalized to 1W	**23.0 W/kg ± 19.5 % (k=2)**

Appendix (Additional assessments outside the scope of SCS 0108)

Antenna Parameters with Head TSL at 5250 MHz

Impedance, transformed to feed point	49.0 Ω - 6.2 jΩ
Return Loss	- 23.9 dB

Antenna Parameters with Head TSL at 5600 MHz

Impedance, transformed to feed point	55.2 Ω - 2.4 jΩ
Return Loss	- 25.3 dB

Antenna Parameters with Head TSL at 5750 MHz

Impedance, transformed to feed point	54.1 Ω - 1.1 jΩ
Return Loss	- 27.8 dB

General Antenna Parameters and Design

Electrical Delay (one direction)	1.194 ns

After long term use with 100W radiated power, only a slight warming of the dipole near the feedpoint can be measured.

The dipole is made of standard semirigid coaxial cable. The center conductor of the feeding line is directly connected to the second arm of the dipole. The antenna is therefore short-circuited for DC-signals. On some of the dipoles, small end caps are added to the dipole arms in order to improve matching when loaded according to the position as explained in the "Measurement Conditions" paragraph. The SAR data are not affected by this change. The overall dipole length is still according to the Standard.
No excessive force must be applied to the dipole arms, because they might bend or the soldered connections near the feedpoint may be damaged.

Additional EUT Data

Manufactured by	SPEAG

DASY5 Validation Report for Head TSL

Date: 23.09.2022

Test Laboratory: SPEAG, Zurich, Switzerland

DUT: Dipole D5GHzV2; Type: D5GHzV2; Serial: D5GHzV2 - SN:1113

Communication System: UID 0 - CW; Frequency: 5250 MHz, Frequency: 5600 MHz, Frequency: 5750 MHz
Medium parameters used: f = 5250 MHz; σ = 4.6 S/m; ε_r = 35.4; ρ = 1000 kg/m^3 ,
Medium parameters used: f = 5600 MHz; σ = 4.95 S/m; ε_r = 34.9; ρ = 1000 kg/m^3 ,
Medium parameters used: f = 5750 MHz; σ = 5.11 S/m; ε_r = 34.7; ρ = 1000 kg/m^3
Phantom section: Flat Section
Measurement Standard: DASY5 (IEEE/IEC/ANSI C63.19-2011)

DASY52 Configuration:

- Probe: EX3DV4 - SN3503; ConvF(5.5, 5.5, 5.5) @ 5250 MHz, ConvF(5.1, 5.1, 5.1) @ 5600 MHz, ConvF(5.08, 5.08, 5.08) @ 5750 MHz; Calibrated: 08.03.2022
- Sensor-Surface: 1.4mm (Mechanical Surface Detection)
- Electronics: DAE4 Sn601; Calibrated: 31.08.2022
- Phantom: Flat Phantom 5.0 (front); Type: QD 000 P50 AA; Serial: 1001
- DASY52 52.10.4(1535); SEMCAD X 14.6.14(7501)

Dipole Calibration for Head Tissue/Pin=100mW, dist=10mm, f=5250 MHz/Zoom Scan, dist=1.4mm (8x8x7)/Cube 0: Measurement grid: dx=4mm, dy=4mm, dz=1.4mm
Reference Value = 75.87 V/m; Power Drift = 0.02 dB
Peak SAR (extrapolated) = 27.8 W/kg
SAR(1 g) = 8.18 W/kg; SAR(10 g) = 2.35 W/kg
Smallest distance from peaks to all points 3 dB below = 7.4 mm
Ratio of SAR at M2 to SAR at M1 = 70.5%
Maximum value of SAR (measured) = 18.7 W/kg

Dipole Calibration for Head Tissue/Pin=100mW, dist=10mm, f=5600 MHz/Zoom Scan, dist=1.4mm (8x8x7)/Cube 0: Measurement grid: dx=4mm, dy=4mm, dz=1.4mm
Reference Value = 75.04 V/m; Power Drift = 0.00 dB
Peak SAR (extrapolated) = 30.4 W/kg
SAR(1 g) = 8.30 W/kg; SAR(10 g) = 2.38 W/kg
Smallest distance from peaks to all points 3 dB below = 7.5 mm
Ratio of SAR at M2 to SAR at M1 = 67.9%
Maximum value of SAR (measured) = 19.3 W/kg

Dipole Calibration for Head Tissue/Pin=100mW, dist=10mm, f=5750 MHz/Zoom Scan, dist=1.4mm (8x8x7)/Cube 0: Measurement grid: dx=4mm, dy=4mm, dz=1.4mm
Reference Value = 72.94 V/m; Power Drift = -0.02 dB
Peak SAR (extrapolated) = 31.7 W/kg
SAR(1 g) = 8.12 W/kg; SAR(10 g) = 2.32 W/kg
Smallest distance from peaks to all points 3 dB below = 7.5 mm
Ratio of SAR at M2 to SAR at M1 = 66%
Maximum value of SAR (measured) = 19.4 W/kg

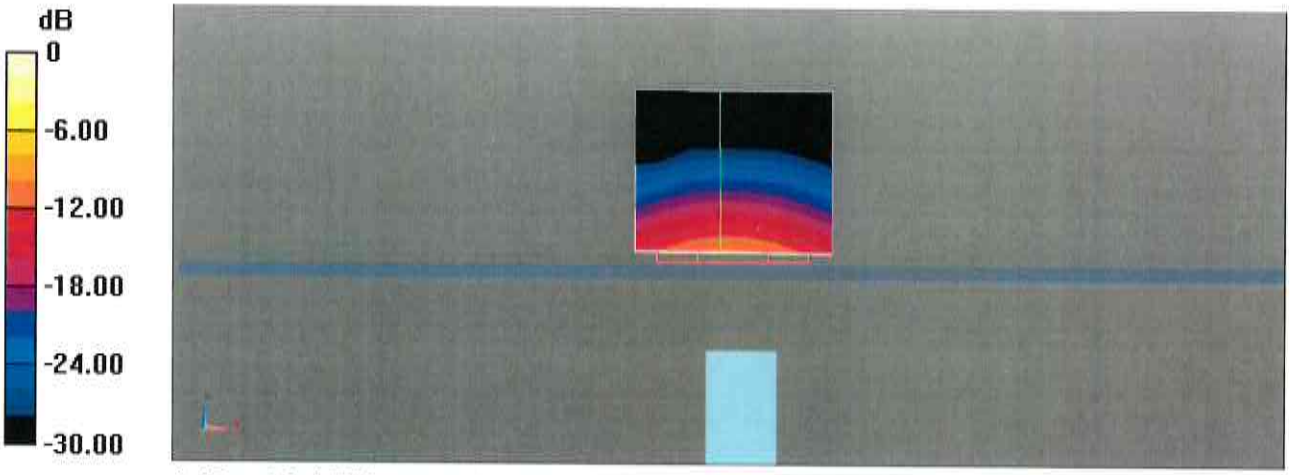

0 dB = 19.4 W/kg = 12.87 dBW/kg

Impedance Measurement Plot for Head TSL

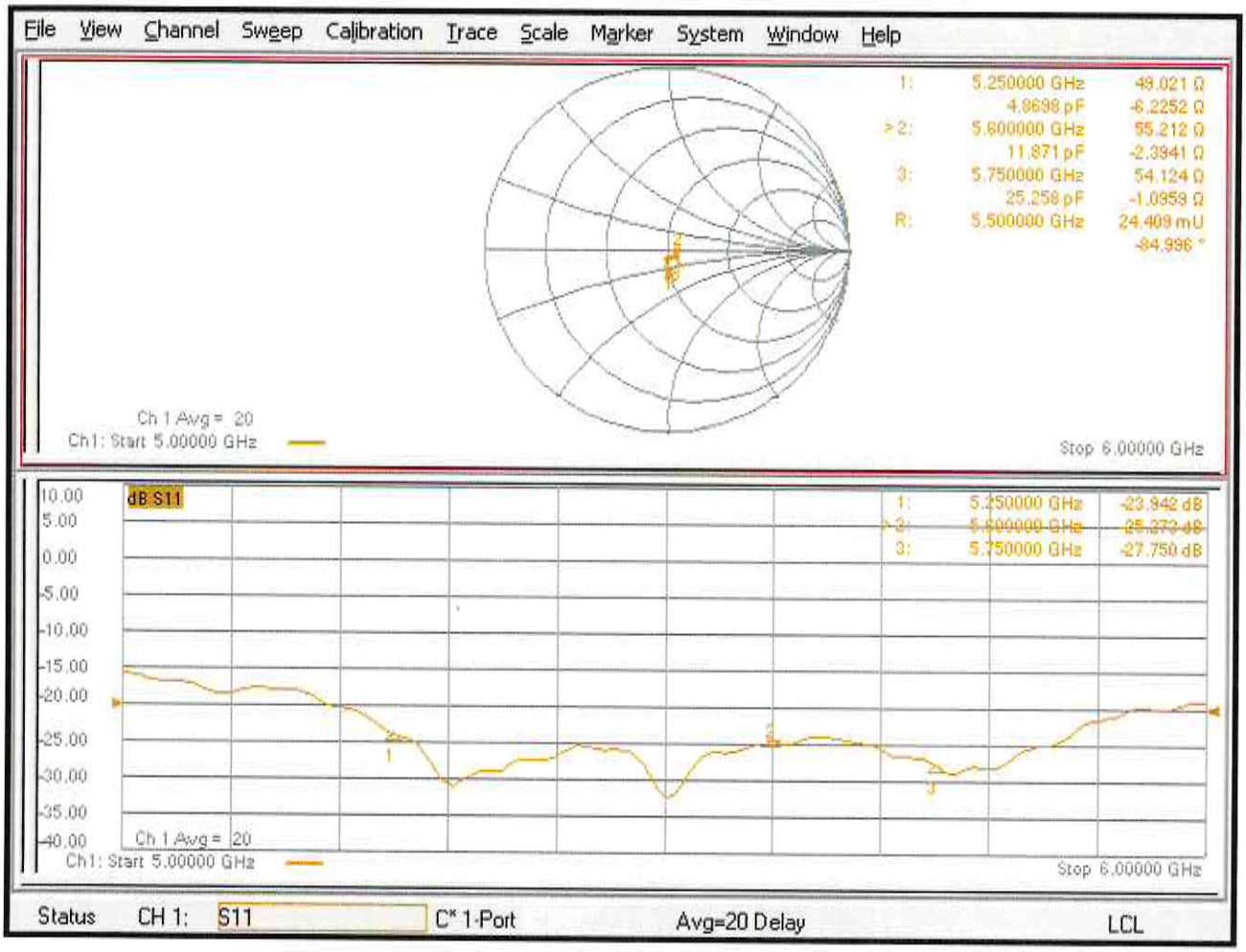

D5GHzV2, Serial No. 1113 Extended Dipole Calibrations

If dipoles are verified in return loss (<-20dB, within 20% of prior calibration),and in impedance (within 5 ohm of prior calibration), the annual calibration is not necessary and thecalibration interval can be extended.

D5GHzV2 – serial no. 1113						
5250 Head						
Date of Measurement	Return-Loss (dB)	Delta (%)	Real Impedance (ohm)	Delta (ohm)	Imaginary Impedance (ohm)	Delta (ohm)
2022/9/23	-23.942		49.021		-6.2252	
2023/9/22	-26.63	11.23	46.533	2.488	-4.0285	-2.1967

D5GHzV2 – serial no. 1113						
5600 Head						
Date of Measurement	Return-Loss (dB)	Delta (%)	Real Impedance (ohm)	Delta (ohm)	Imaginary Impedance (ohm)	Delta (ohm)
2022/9/23	-25.273		55.212		-2.3941	
2023/9/22	-23.746	-6.04	57.759	-2.547	1.4943	-3.8884

D5GHzV2 – serial no. 1113						
5750 Head						
Date of Measurement	Return-Loss (dB)	Delta (%)	Real Impedance (ohm)	Delta (ohm)	Imaginary Impedance (ohm)	Delta (ohm)
2022/9/23	-27.750		54.124		-1.0959	
2023/9/22	-31.350	12.97	50.097	4.027	-3.1053	2.0094

<Justification of the extended calibration>

The return loss is < -20dB, within 20% of prior calibration; the impedance is within 5 ohm of prior calibration. Therefore the verification result should support extended calibration.

Dipole Verification Data> D5GHzV2, serial no. 1113

5250MHz&5600MHz&5750MHz – Head – 2023.9.22

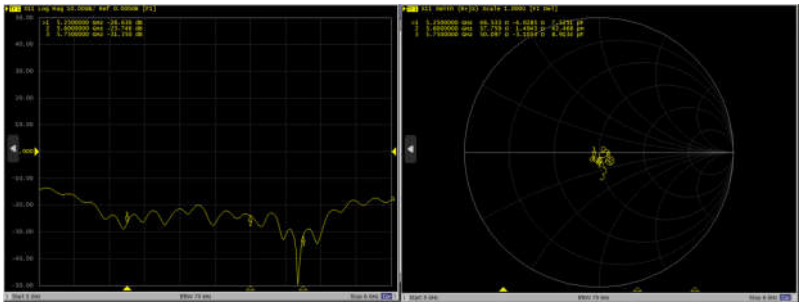

Schmid & Partner Engineering AG

s p e a g

Zeughausstrasse 43, 8004 Zurich, Switzerland
Phone +41 44 245 9700, Fax +41 44 245 9779
www.speag.swiss, info@speag.swiss

IMPORTANT NOTICE

USAGE OF THE DAE4

The DAE unit is a delicate, high precision instrument and requires careful treatment by the user. There are no serviceable parts inside the DAE. Special attention shall be given to the following points:

Battery Exchange: The battery cover of the DAE4 unit is closed using a screw, over tightening the screw may cause the threads inside the DAE to wear out.

Shipping of the DAE: Before shipping the DAE to SPEAG for calibration, remove the batteries and pack the DAE in an antistatic bag. This antistatic bag shall then be packed into a larger box or container which protects the DAE from impacts during transportation. The package shall be marked to indicate that a fragile instrument is inside.

E-Stop Failures: Touch detection may be malfunctioning due to broken magnets in the E-stop. Rough handling of the E-stop may lead to damage of these magnets. Touch and collision errors are often caused by dust and dirt accumulated in the E-stop. To prevent E-stop failure, the customer shall always mount the probe to the DAE carefully and keep the DAE unit in a non-dusty environment if not used for measurements.

Repair: Minor repairs are performed at no extra cost during the calibration. However, SPEAG reserves the right to charge for any repair especially if rough unprofessional handling caused the defect.

DASY Configuration Files: Since the exact values of the DAE input resistances, as measured during the calibration procedure of a DAE unit, are not used by the DASY software, a nominal value of 200 MOhm is given in the corresponding configuration file.

Important Note:
Warranty and calibration is void if the DAE unit is disassembled partly or fully by the Customer.

Important Note:
Never attempt to grease or oil the E-stop assembly. Cleaning and readjusting of the E-stop assembly is allowed by certified SPEAG personnel only and is part of the calibration procedure.

Important Note:
To prevent damage of the DAE probe connector pins, use great care when installing the probe to the DAE. Carefully connect the probe with the connector notch oriented in the mating position. Avoid any rotational movement of the probe body versus the DAE while turning the locking nut of the connector. The same care shall be used when disconnecting the probe from the DAE.

Calibration Laboratory of
Schmid & Partner
Engineering AG
Zeughausstrasse 43, 8004 Zurich, Switzerland

S Schweizerischer Kalibrierdienst
C Service suisse d'étalonnage
Servizio svizzero di taratura
S Swiss Calibration Service

Accredited by the Swiss Accreditation Service (SAS)
The Swiss Accreditation Service is one of the signatories to the EA Multilateral Agreement for the recognition of calibration certificates

Accreditation No.: SCS 0108

Client **Sporton**
Kunshan City

Certificate No: DAE4-1649_Jul24

CALIBRATION CERTIFICATE

Object	DAE4 - SD 000 D04 BO - SN: 1649
Calibration procedure(s)	QA CAL-06.v30 Calibration procedure for the data acquisition electronics (DAE)
Calibration date:	July 03, 2024

This calibration certificate documents the traceability to national standards, which realize the physical units of measurements (SI).
The measurements and the uncertainties with confidence probability are given on the following pages and are part of the certificate.

All calibrations have been conducted in the closed laboratory facility: environment temperature (22 ± 3)°C and humidity < 70%.

Calibration Equipment used (M&TE critical for calibration)

Primary Standards	ID #	Cal Date (Certificate No.)	Scheduled Calibration
Keithley Multimeter Type 2001	SN: 0810278	29-Aug-23 (No:37421)	Aug-24
Secondary Standards	**ID #**	**Check Date (in house)**	**Scheduled Check**
Auto DAE Calibration Unit	SE UWS 053 AA 1001	23-Jan-24 (in house check)	In house check: Jan-25
Calibrator Box V2.1	SE UMS 006 AA 1002	23-Jan-24 (in house check)	In house check: Jan-25

	Name	Function	Signature
Calibrated by:	Adrian Gehring	Laboratory Technician	
Approved by:	Sven Kühn	Technical Manager	i.V.

Issued: July 3, 2024

This calibration certificate shall not be reproduced except in full without written approval of the laboratory.

Calibration Laboratory of
Schmid & Partner
Engineering AG
Zeughausstrasse 43, 8004 Zurich, Switzerland

Accredited by the Swiss Accreditation Service (SAS)
The Swiss Accreditation Service is one of the signatories to the EA Multilateral Agreement for the recognition of calibration certificates

S C S **Schweizerischer Kalibrierdienst**
Service suisse d'étalonnage
Servizio svizzero di taratura
Swiss Calibration Service

Accreditation No.: SCS 0108

Glossary

DAE	data acquisition electronics
Connector angle	information used in DASY system to align probe sensor X to the robot coordinate system.

Methods Applied and Interpretation of Parameters

- *DC Voltage Measurement:* Calibration Factor assessed for use in DASY system by comparison with a calibrated instrument traceable to national standards. The figure given corresponds to the full scale range of the voltmeter in the respective range.
- *Connector angle*: The angle of the connector is assessed measuring the angle mechanically by a tool inserted. Uncertainty is not required.
- The following parameters as documented in the Appendix contain technical information as a result from the performance test and require no uncertainty.
  - *DC Voltage Measurement Linearity:* Verification of the Linearity at +10% and -10% of the nominal calibration voltage. Influence of offset voltage is included in this measurement.
  - *Common mode sensitivity:* Influence of a positive or negative common mode voltage on the differential measurement.
  - *Channel separation:* Influence of a voltage on the neighbor channels not subject to an input voltage.
  - *AD Converter Values with inputs shorted:* Values on the internal AD converter corresponding to zero input voltage
  - *Input Offset Measurement*: Output voltage and statistical results over a large number of zero voltage measurements.
  - *Input Offset Current:* Typical value for information; Maximum channel input offset current, not considering the input resistance.
  - *Input resistance:* Typical value for information: DAE input resistance at the connector, during internal auto-zeroing and during measurement.
  - *Low Battery Alarm Voltage:* Typical value for information. Below this voltage, a battery alarm signal is generated.
  - *Power consumption:* Typical value for information. Supply currents in various operating modes.

DC Voltage Measurement

A/D - Converter Resolution nominal

High Range: 1LSB = 6.1µV , full range = -100...+300 mV

Low Range: 1LSB = 61nV , full range = -1.....+3mV

DASY measurement parameters: Auto Zero Time: 3 sec; Measuring time: 3 sec

Calibration Factors	X	Y	Z
High Range	404.663 ± 0.02% (k=2)	404.640 ± 0.02% (k=2)	404.450 ± 0.02% (k=2)
Low Range	3.95131 ± 1.50% (k=2)	3.98690 ± 1.50% (k=2)	3.97645 ± 1.50% (k=2)

Connector Angle

Connector Angle to be used in DASY system	99.0 ° ± 1 °

Appendix (Additional assessments outside the scope of SCS0108)

1. DC Voltage Linearity

High Range		Reading (µV)	Difference (µV)	Error (%)
Channel X	+ Input	200033.11	-1.59	-0.00
Channel X	+ Input	20001.90	-1.52	-0.01
Channel X	- Input	-20008.04	1.53	-0.01
Channel Y	+ Input	200034.18	-0.62	-0.00
Channel Y	+ Input	20000.91	-2.38	-0.01
Channel Y	- Input	-20011.90	-2.25	0.01
Channel Z	+ Input	200034.96	0.07	0.00
Channel Z	+ Input	19999.54	-3.71	-0.02
Channel Z	- Input	-20012.28	-2.66	0.01

Low Range		Reading (µV)	Difference (µV)	Error (%)
Channel X	+ Input	1998.71	0.42	0.02
Channel X	+ Input	197.91	-0.10	-0.05
Channel X	- Input	-202.34	-0.29	0.14
Channel Y	+ Input	1997.56	-0.38	-0.02
Channel Y	+ Input	197.05	-0.88	-0.44
Channel Y	- Input	-203.51	-1.17	0.58
Channel Z	+ Input	1998.06	0.10	0.00
Channel Z	+ Input	197.22	-0.45	-0.23
Channel Z	- Input	-203.22	-0.72	0.36

2. Common mode sensitivity

DASY measurement parameters: Auto Zero Time: 3 sec; Measuring time: 3 sec

	Common mode Input Voltage (mV)	High Range Average Reading (µV)	Low Range Average Reading (µV)
Channel X	200	2.89	1.66
	- 200	-1.29	-2.59
Channel Y	200	-6.72	-6.95
	- 200	5.98	4.84
Channel Z	200	0.35	0.17
	- 200	-1.86	-1.85

3. Channel separation

DASY measurement parameters: Auto Zero Time: 3 sec; Measuring time: 3 sec

	Input Voltage (mV)	Channel X (µV)	Channel Y (µV)	Channel Z (µV)
Channel X	200	-	0.65	-3.70
Channel Y	200	6.72	-	2.71
Channel Z	200	9.32	4.17	-

4. AD-Converter Values with inputs shorted

DASY measurement parameters: Auto Zero Time: 3 sec; Measuring time: 3 sec

	High Range (LSB)	Low Range (LSB)
Channel X	15989	15937
Channel Y	16052	15877
Channel Z	16192	16625

5. Input Offset Measurement

DASY measurement parameters: Auto Zero Time: 3 sec; Measuring time: 3 sec
Input 10MΩ

	Average (µV)	min. Offset (µV)	max. Offset (µV)	Std. Deviation (µV)
Channel X	0.29	-0.70	1.38	0.40
Channel Y	-0.60	-1.51	0.33	0.34
Channel Z	-0.54	-1.41	0.87	0.40

6. Input Offset Current

Nominal Input circuitry offset current on all channels: <25fA

7. Input Resistance (Typical values for information)

	Zeroing (kOhm)	Measuring (MOhm)
Channel X	200	200
Channel Y	200	200
Channel Z	200	200

8. Low Battery Alarm Voltage (Typical values for information)

Typical values	Alarm Level (VDC)
Supply (+ Vcc)	+7.9
Supply (- Vcc)	-7.6

9. Power Consumption (Typical values for information)

Typical values	Switched off (mA)	Stand by (mA)	Transmitting (mA)
Supply (+ Vcc)	+0.01	+6	+14
Supply (- Vcc)	–0.01	-8	-9

Schmid & Partner Engineering AG

s p e a g

Zeughausstrasse 43, 8004 Zurich, Switzerland
Phone +41 44 245 9700, Fax +41 44 245 9779
www.speag.swiss, info@speag.swiss

IMPORTANT NOTICE

USAGE OF THE DAE4

The DAE unit is a delicate, high precision instrument and requires careful treatment by the user. There are no serviceable parts inside the DAE. Special attention shall be given to the following points:

Battery Exchange: The battery cover of the DAE4 unit is fixed using a screw, over tightening the screw may cause the threads inside the DAE to wear out.

Shipping of the DAE: Before shipping the DAE to SPEAG for calibration, remove the batteries and pack the DAE in an antistatic bag. This antistatic bag shall then be packed into a larger box or container which protects the DAE from impacts during transportation. The package shall be marked to indicate that a fragile instrument is inside.

E-Stop Failures: Touch detection may be malfunctioning due to broken magnets in the E-stop. Rough handling of the E-stop may lead to damage of these magnets. Touch and collision errors are often caused by dust and dirt accumulated in the E-stop. To prevent E-stop failure, the customer shall always mount the probe to the DAE carefully and keep the DAE unit in a non-dusty environment if not used for measurements.

Repair: Minor repairs are performed at no extra cost during the annual calibration. However, SPEAG reserves the right to charge for any repair especially if rough unprofessional handling caused the defect.

DASY Configuration Files: Since the exact values of the DAE input resistances, as measured during the calibration procedure of a DAE unit, are not used by the DASY software, a nominal value of 200 MOhm is given in the corresponding configuration file.

Important Note:
Warranty and calibration is void if the DAE unit is disassembled partly or fully by the Customer.

Important Note:
Never attempt to grease or oil the E-stop assembly. Cleaning and readjusting of the E-stop assembly is allowed by certified SPEAG personnel only and is part of the annual calibration procedure.

Important Note:
To prevent damage of the DAE probe connector pins, use great care when installing the probe to the DAE. Carefully connect the probe with the connector notch oriented in the mating position. Avoid any rotational movement of the probe body versus the DAE while turning the locking nut of the connector. The same care shall be used when disconnecting the probe from the DAE.

Calibration Laboratory of
Schmid & Partner
Engineering AG
Zeughausstrasse 43, 8004 Zurich, Switzerland

S Schweizerischer Kalibrierdienst
C Service suisse d'étalonnage
Servizio svizzero di taratura
S Swiss Calibration Service

Accredited by the Swiss Accreditation Service (SAS)
The Swiss Accreditation Service is one of the signatories to the EA Multilateral Agreement for the recognition of calibration certificates

Accreditation No.: SCS 0108

Client **Sporton**
Kunshan City

Certificate No: DAE4-1650_Sep23

CALIBRATION CERTIFICATE

Object	DAE4 - SD 000 D04 BO - SN: 1650
Calibration procedure(s)	QA CAL-06.v30 Calibration procedure for the data acquisition electronics (DAE)
Calibration date:	September 13, 2023

This calibration certificate documents the traceability to national standards, which realize the physical units of measurements (SI).
The measurements and the uncertainties with confidence probability are given on the following pages and are part of the certificate.

All calibrations have been conducted in the closed laboratory facility: environment temperature (22 ± 3)°C and humidity < 70%.

Calibration Equipment used (M&TE critical for calibration)

Primary Standards	ID #	Cal Date (Certificate No.)	Scheduled Calibration
Keithley Multimeter Type 2001	SN: 0810278	29-Aug-23 (No:37421)	Aug-24
Secondary Standards	**ID #**	**Check Date (in house)**	**Scheduled Check**
Auto DAE Calibration Unit	SE UWS 053 AA 1001	27-Jan-23 (in house check)	In house check: Jan-24
Calibrator Box V2.1	SE UMS 006 AA 1002	27-Jan-23 (in house check)	In house check: Jan-24

	Name	Function	Signature
Calibrated by:	Dominique Steffen	Laboratory Technician	
Approved by:	Sven Kühn	Technical Manager	

Issued: September 13, 2023

This calibration certificate shall not be reproduced except in full without written approval of the laboratory.