FCC Part 96.47 Test Report

Applicant	:	**Sonim Technologies, Inc.**
Equipment	:	**5G Feature Phone**
Brand Name	:	**Sonim**
Model Name	:	**X320(S1303),X320(S1403),X320(S1301),X320(S1401), X320(S1302),X320(S1402),X320(S1304),X320(S1404), X320(S1305),X320(S1405),X320(S1310),X320(S1410)**
FCC ID	:	**WYPS13030**
Standard	:	**FCC Part 96.47**
TEST DATE(S)	:	**Jul. 10, 2024 ~ Jul. 11, 2024**

We, Sporton International Inc. (Kunshan), would like to declare that the tested sample has been evaluated in accordance with the test procedures and has been in compliance with the applicable technical standards.

The test results in this report apply exclusively to the tested model / sample. Without written approval of Sporton International Inc. (Kunshan), the test report shall not be reproduced except in full.

Jason Jia

Approved by: Jason Jia

ACCREDITED
Cert #5145.02

Sporton International Inc. (Kunshan)
No. 1098, Pengxi North Road, Kunshan Economic Development Zone Jiangsu Province 215300 People's Republic of China

Table of Contents

1 GENERAL DESCRIPTION 5

1.1 APPLICANT 5

1.2 MANUFACTURER 5

1.3 PRODUCT FEATURE OF EQUIPMENT UNDER TEST 5

1.4 PRODUCT SPECIFICATION OF EQUIPMENT UNDER TEST 5

1.5 TESTING LOCATION 6

1.6 APPLICABLE STANDARDS 6

2 TEST CONFIGURATION OF EQUIPMENT UNDER TEST 7

2.1 CONNECTION DIAGRAM OF TEST SYSTEM 7

3 END USER DEVICE ADDITIONAL REQUIREMENT 8

3.1 TEST REQUIREMENT 8

3.2 TEST PROCEDURE 8

3.3 TEST RESULT 9

4 LIST OF MEASURING EQUIPMENT 11

5 MEASUREMENT UNCERTAINTY 12

APPENDIX A. SETUP PHOTO

History of this test report

Report No.	Version	Description	Issued Date
FG462605M	01	Initial issue of report	Sep. 14, 2024

Summary of Test Result

Report Clause	Ref Std. Clause	Test Items	Result (PASS/FAIL)	Remark
3	96.47	End User Device additional requirement	Pass	-

Disclaimer:
The product specifications of the EUT presented in the test report that may affect the test assessments are declared by the manufacturer who shall take full responsibility for the authenticity.

1 General Description

1.1 Applicant

Sonim Technologies, Inc.
4445 Eastgate Mall, Suite 200, San Diego, CA 92121, USA

1.2 Manufacturer

Sonim Technologies, Inc.
4445 Eastgate Mall, Suite 200, San Diego, CA 92121, USA

1.3 Product Feature of Equipment Under Test

Product Feature	
Equipment	5G Feature Phone
Brand Name	Sonim
Model Name	X320(S1303),X320(S1403),X320(S1301),X320(S1401),X320(S1302), X320(S1402),X320(S1304),X320(S1404),X320(S1305),X320(S1405), X320(S1310),X320(S1410)
FCC ID	WYPS13030
IMEI Code	016562000011750/016562000012758
HW Version	V1.0
SW Version	X32.0-01-14.0-19.01.00
EUT Stage	Identical Prototype

Remark: The above EUT's information was declared by manufacturer. Please refer to the specifications or user's manual for more detailed description.

1.4 Product Specification of Equipment Under Test

Standards-related Product Specification	
Tx/Rx Frequency	5G NR n48: 3550 MHz ~ 3700 MHz 5G NR n77: 3550 MHz ~ 3700 MHz 5G NR n78: 3550 MHz ~ 3700 MHz
Antenna Type / Gain	Ant 2: 0.7 dBi Ant 5: -3.3 dBi Ant 6: 0.1 dBi Ant 7: -1.6 dBi
Type of Modulation	DFT-s-OFDM (PI/2 BPSK / QPSK / 16QAM / 64QAM / 256QAM) CP-OFDM (QPSK / 16QAM / 64QAM / 256QAM)

1.5 Testing Location

Sporton International Inc. (Kunshan) is accredited to ISO/IEC 17025:2017 by American Association for Laboratory Accreditation with Certificate Number 5145.02.

Test Firm	Sporton International Inc. (Kunshan)		
Test Site Location	No. 1098, Pengxi North Road, Kunshan Economic Development Zone Jiangsu Province 215300 People's Republic of China TEL : +86-512-57900158		
Test Site No.	**Sporton Site No.**	**FCC Designation No.**	**FCC Test Firm Registration No.**
	DFS01-KS	CN1257	314309
Test Engineer	Chad Wang		
Temperature	20~24.5℃		
Relative Humidity	40~60%		

1.6 Applicable Standards

- FCC Part 96.47
- FCC KDB 940660 D01 Part 96 CBRS Eqpt v03
- WINNF-TS-0122-V1.0.2 CBRS CBSD Test Specification

Remark: All test items were verified and recorded according to the standards and without any deviation during the test.

2 Test Configuration of Equipment Under Test

2.1 Connection Diagram of Test System

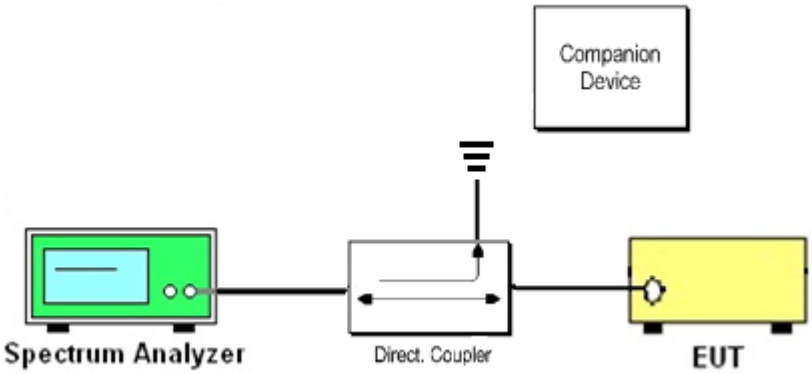

The companion device is certified CBRS (FCC ID: WBKRU4370)

3 End User Device additional requirement

3.1 Test Requirement

FCC Part 96.47

(a) End User Devices may operate only if they can positively receive and decode an authorization signal transmitted by a CBSD, including the frequencies and power limits for their operation.

(1) An End User Device must discontinue operations, change frequencies, or change its operational power level within 10 seconds of receiving instructions from its associated CBSD.

3.2 Test Procedure

Following procedure can be done by applying WINNF-TS-0122-V1.0.2 CBRS CBSD Test Specification, use the certified CBSD (FCC ID: WBKRU4370) as companion device to show compliance with Part 96.47 requirement for End User Device (EUD):

1. Setup with frequency 3550-3650MHz and power level 28dBm/MHz
2. Enable AP service from Cloud management
3. Check EUD Tx Frequency and power
4. Disable AP service from Ruckus Cloud management
    a. Check EUD stops transmission within 10seconds.

5. Setup with 3600-3700MHz & power level 18dBm/MHz
6. Enable AP service from Cloud management
7. Check EUD Tx Frequency and power
8. Disable AP service from Ruckus Cloud management
    a. Check EUD stops transmission within 10seconds.

3.3 Test Result

[Step 1] Setup with frequency 3550--3650MHz and power level 28dBm/MHz

[Step 3] Check EUD Tx Frequency and power

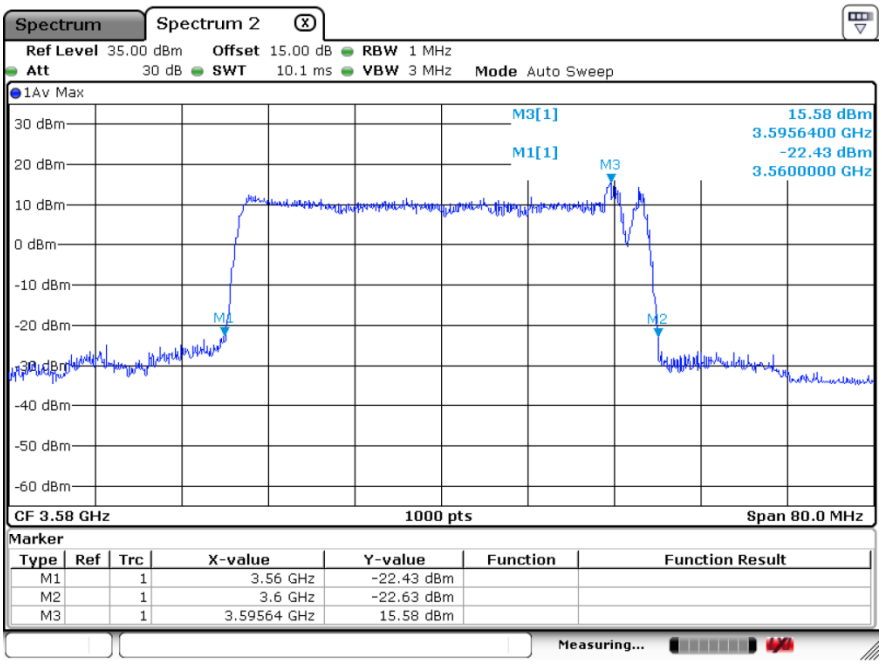

[Step 4.a.] EUD stops transmission within 10 seconds of receiving instructions from its associated CBSD.

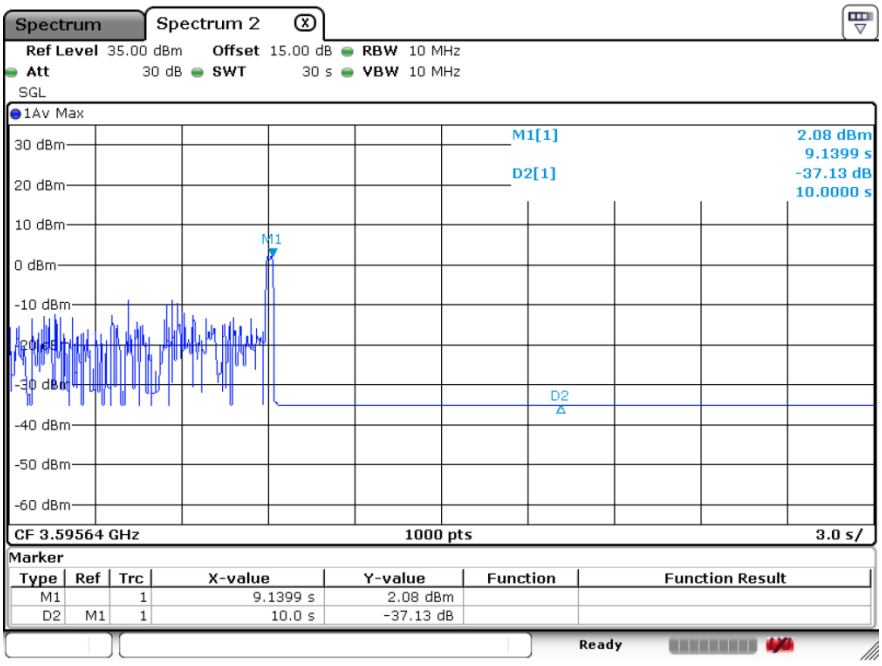

[Step 5] Setup with frequency 3600-3700MHz and power level 18dBm/MHz

[Step 7] Check EUD Tx Frequency and power

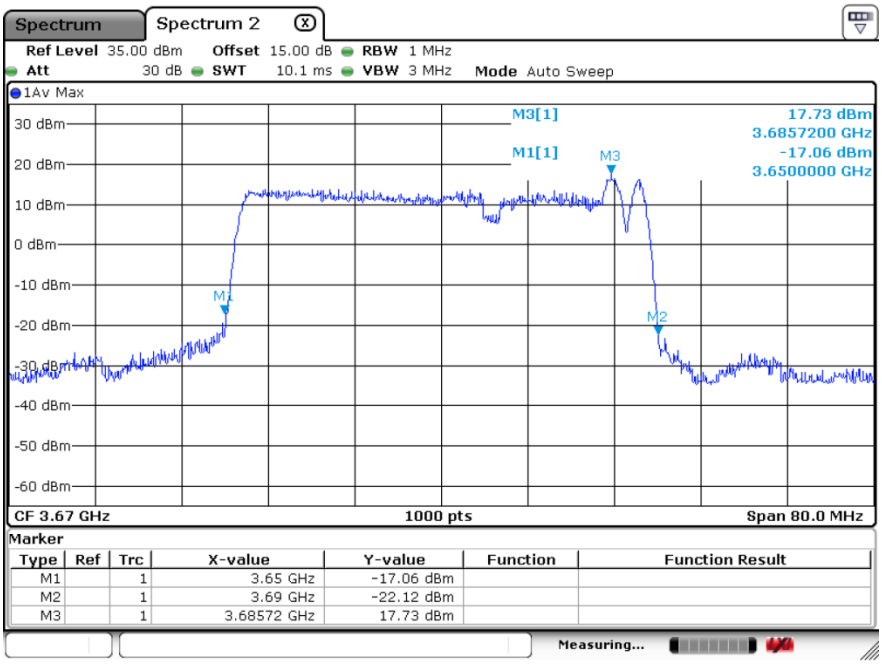

[Step 8.a.] After changing the frequency and power level,

The module (EUT) discontinues operations, change frequencies, or change its operational power level within 10 seconds of receiving instructions from its associated CBSD. Test result is PASS.

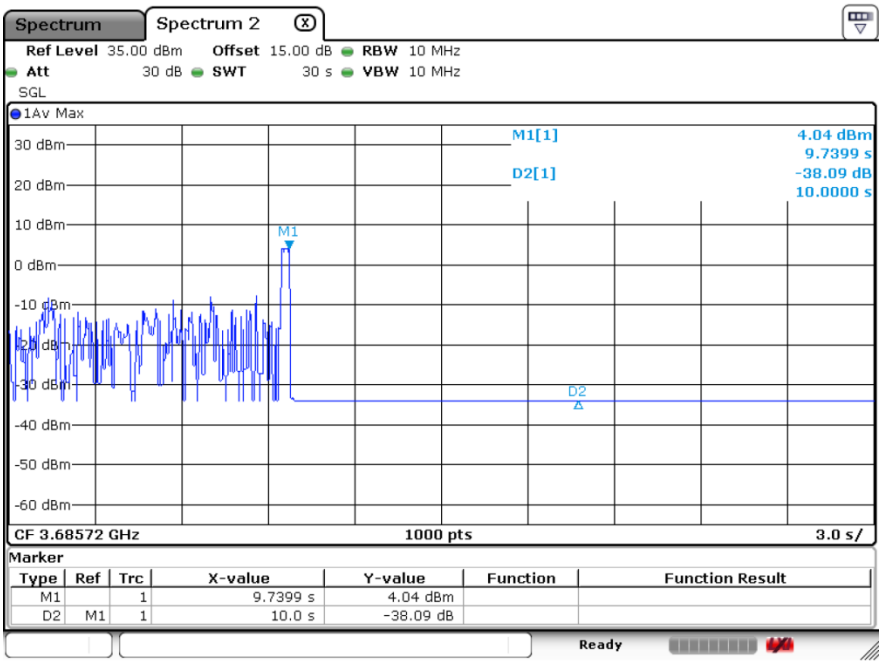

4 List of Measuring Equipment

Instrument	Manufacturer	Model No.	Serial No.	Characteristics	Calibration Date	Test Date	Due Date	Remark
Signal Analyzer	R&S	FSV7	101472	10Hz~7GHz	Jan. 05, 2024	Jul. 10, 2024 ~ Jul. 11, 2024	Jan. 04, 2025	Conducted (DFS01-KS)
Combiner	MTJ Cooperation	MTJ7112	N/A	0.4-6GHz	NCR	Jul. 10, 2024 ~ Jul. 11, 2024	NCR	Conducted (DFS01-KS)

5 Measurement Uncertainty

The measurement uncertainties shown below were calculated in accordance with the requirements of ANSI 63.10-2013. All the measurement uncertainty value were shown with a coverage K=2 to indicate 95% level of confidence. The measurement data show herein meets or exceeds the CISPR measurement uncertainty values specified in CISPR 16-4-2 and can be compared directly to specified limit to determine compliance.

Uncertainty of Conducted Measurement

Test Item	Uncertainty
Conducted Generated signal Levels	**±0.56 dB**
Conducted Time	**0.38%**

---------- THE END ----------