# RF-Emission Test Report

| | |
|---|---|
| **Application No.:** | SUCR2505000494WM |
| **Applicant:** | Sonim Technologies, Inc. |
| **Address of Applicant:** | 4445 Eastgate Mall, Suite 200, San Diego, CA 92121, USA |
| **Manufacturer:** | Sonim Technologies, Inc. |
| **Address of Manufacturer:** | 4445 Eastgate Mall, Suite 200, San Diego, CA 92121, USA |
| **EUT Description:** | Smartphone |
| **Model No:** | X800 |
| **FCC ID:** | WYPS6002 |
| **Standards:** | ANSI C63.19-2019<br>CFR 47 FCC Part 20 |
| **Date of Receipt:** | 2025-05-28 |
| **Date of Test:** | 2025-06-09 to 2025-06-10 |
| **Date of Issue:** | 2025-06-16 |
| **Test Result:** | **PASS *** |

* In the configuration tested, the EUT detailed in this report complied with the standards specified above.

This document is issued by the Company subject to its General Conditions of Service printed overleaf, available on request or accessible at http://www.sgs.com/en/Terms-and-Conditions and, for electronic format documents, subject to Terms and Conditions for Electronic Documents at http://www.sgs.com/en/Terms-and-Conditions/Terms-e-Document. Attention is drawn to the limitation of liability, indemnification and jurisdiction issues defined therein. Any holder of this document is advised that information contained hereon reflects the Company's findings at the time of its intervention only and within the limits of Client's instructions, if any. The Company's sole responsibility is to its Client and this document does not exonerate parties to a transaction from exercising all their rights and obligations under the transaction documents. This document cannot be reproduced except in full, without prior written approval of the Company. Any unauthorized alteration, forgery or falsification of the content or appearance of this document is unlawful and offenders may be prosecuted to the fullest extent of the law.
Unless otherwise stated the results shown in this test report refer only to the sample(s) tested and such sample(s) are retained for 30 days only.

**Attention: To check the authenticity of testing / inspection report & certificate, please contact us at telephone:(86-755) 8307 1443, or email: CN.Doccheck@sgs.com**

| Revision Record | | | |
|---|---|---|---|
| **Version** | **Description** | **Date** | **Remark** |
| 01 | Original | 2025-06-16 | / |
| | | | |
| | | | |

| | | | | |
|---|---|---|---|---|
| **Authorized for issue by:** | | | | |
| | | Alger Du<br>**Alger Du/ Project Engineer** | | |
| | | Leon Liu<br>**Leon Liu/ Reviewer** | | |

# TEST SUMMARY

| Frequency Band | HAC RF Emission Test result* | | Results |
|---|---|---|---|
| GSM 850 | E-Field dB(V/m) | 37.86 | PASS |
| PCS 1900 | E-Field dB(V/m) | 33.70 | PASS |
| WCDMA band 2 | E-Field dB(V/m) | / | PASS |
| WCDMA band 4 | E-Field dB(V/m) | / | PASS |
| WCDMA band 5 | E-Field dB(V/m) | / | PASS |
| LTE band 2 | E-Field dB(V/m) | / | PASS |
| LTE band 4 | E-Field dB(V/m) | / | PASS |
| LTE band 5 | E-Field dB(V/m) | / | PASS |
| LTE band 7 | E-Field dB(V/m) | / | PASS |
| LTE band 12 | E-Field dB(V/m) | / | PASS |
| LTE band 13 | E-Field dB(V/m) | / | PASS |
| LTE band 14 | E-Field dB(V/m) | / | PASS |
| LTE band 25 | E-Field dB(V/m) | / | PASS |
| LTE band 26 | E-Field dB(V/m) | / | PASS |
| LTE band 30 | E-Field dB(V/m) | / | PASS |
| LTE band 38 | E-Field dB(V/m) | / | PASS |
| LTE band 41 | E-Field dB(V/m) | / | PASS |
| LTE band 42 | E-Field dB(V/m) | / | PASS |
| LTE band 48 | E-Field dB(V/m) | / | PASS |
| LTE band 66 | E-Field dB(V/m) | / | PASS |
| LTE band 71 | E-Field dB(V/m) | / | PASS |
| FR1 n2 | E-Field dB(V/m) | / | PASS |
| FR1 n5 | E-Field dB(V/m) | / | PASS |
| FR1 n7 | E-Field dB(V/m) | / | PASS |
| FR1 n14 | E-Field dB(V/m) | / | PASS |
| FR1 n25 | E-Field dB(V/m) | / | PASS |
| FR1 n26 | E-Field dB(V/m) | / | PASS |
| FR1 n38 | E-Field dB(V/m) | / | PASS |
| FR1 n41 | E-Field dB(V/m) | / | PASS |
| FR1 n48 | E-Field dB(V/m) | / | PASS |
| FR1 n66 | E-Field dB(V/m) | / | PASS |
| FR1 n70 | E-Field dB(V/m) | / | PASS |
| FR1 n71 | E-Field dB(V/m) | / | PASS |
| FR1 n77 | E-Field dB(V/m) | / | PASS |
| FR1 n78 | E-Field dB(V/m) | / | PASS |
| WLAN2.4GHz | E-Field dB(V/m) | / | PASS |
| WLAN5GHz | E-Field dB(V/m) | / | PASS |
| WLAN6GHz | E-Field dB(V/m) | / | PASS |
| HAC ResultS: PASS | | | |

**Note:**

1) This portable wireless equipment has been shown to be hearing-aid compatible under the above rated category, specified in ANSI/IEEE Std.C63.19-2019 and had been tested in accordance with the specified measurement procedures, Hear-Aid Compatibility is based on the assumption that all production units will be designed electrically identical to the device tested in this report. Test results reported herein relate only to the item(s) tested and are for North American Bands only.

2) *- HAC RF Emission Test for low power exemption according to ANSI C63.19-2019 and HAC RF Emission rating is PASS.

3) According to the manufacturer's statement, perform verification testing in the original report (original report number SUCR240600020102) and select the worst position for verification.

The worst case is presented by selecting the maximum value from the original report (report number SUCR240600020102) and this report (report number SUCR250500049402).

Please refer to section 9.4 of the report for the experimental values of this experiment.

# CONTENTS

**1 General Information ..... 5**

1.1 Introduction ..... 5
1.2 Details of Client ..... 6
1.3 Test Location ..... 6
1.4 Test Facility ..... 6
1.5 General Description of EUT ..... 7
*1.5.1 DUT Antenna Locations ..... 9*
*1.5.2 List of air interfaces/frequency bands ..... 10*
1.6 Test Specification ..... 12
1.7 ANSI C63.19-2019 limits ..... 12

**2 Calibration certificate ..... 13**

**3 HAC (T Coil) Measurement System ..... 14**

3.1 Measurement System Diagram for SPEAG Robotic ..... 14
3.2 E-Field Probe ..... 15
3.3 Test Arch ..... 15
3.4 Phone Holder ..... 15

**4 Measurement uncertainty evaluation ..... 16**

**5 RF Emission Measurements Reference and Plane ..... 17**

**6 System Verification Procedure ..... 18**

6.1 System Check ..... 18
6.2 System Check Result ..... 19

**7 Modulation Interference Factor ..... 20**

**8 HAC Measurement Procedure ..... 22**

**9 HAC RF Measurement Results ..... 23**

9.1 Max Tune-up ..... 23
9.2 Conducted RF Output Power ..... 25
9.3 Low-power Exemption ..... 26
9.4 HAC RF Emission Test Results ..... 29

**10 Equipment list ..... 30**

# 1 General Information

## 1.1 Introduction

The purpose of the Hearing Aid Compatibility is to enable measurements of the near electric fields generated by wireless communication devices in the region controlled for use by a hearing aid in accordance with ANSI-C63.19-2019.

The purpose of this standard is to establish categories for hearing aids and for WD (wireless communications devices) that can indicate to health care practitioners and hearing aid users which hearing aids are compatible with which WD, and to provide tests that can be used to assess the electromagnetic characteristics of hearing aids and WD and assign them to these categories. The various parameters required, in order to demonstrate compatibility and accessibility are measured. The design of the standard is such that when a hearing aid and WD achieve one of the categories specified, as measured by the methodology of this standard, the indicated performance is realized.

In order to provide for the usability of a hearing aid with a WD, several factors must be coordinated:
a) Radio frequency (RF) measurements of the near-field electric fields emitted by a WD to categorize these emissions for correlation with the RF immunity of a hearing aid.

Hence, the following are measurements made for the WD:
RF E-Field emissions

The measurement plane is parallel to, and 1.5cm in front of, the reference plane.

Applications for certification of equipment operation under part 20, that a manufacturer is seeking to certify as hearing aid compatible, as set forth in §20.19 of that part, shall include a statement indication compliance with the test requirements of §20.19 and indicating the appropriate U-rating for the equipment. The manufacturer of the equipment shall be responsible for maintaining the test results.

## 1.2 Details of Client

| | |
|---|---|
| Applicant: | Sonim Technologies, Inc. |
| Address: | 4445 Eastgate Mall, Suite 200, San Diego, CA 92121, USA |
| Manufacturer: | Sonim Technologies, Inc. |
| Address: | 4445 Eastgate Mall, Suite 200, San Diego, CA 92121, USA |

## 1.3 Test Location

| | |
|---|---|
| Company: | SGS-CSTC Standards Technical Services (Suzhou) Co., Ltd. |
| Address: | South of No. 6 Plant, No. 1, Runsheng Road, Suzhou Industrial Park, Suzhou Area, China (Jiangsu) Pilot Free Trade Zone |
| Post code: | 215000 |
| Test Engineer: | Alger Du |

## 1.4 Test Facility

The test facility is recognized, certified, or accredited by the following organizations:

- **A2LA (Certificate No. 6336.01)**

SGS-CSTC STANDARDS TECHNICAL SERVICES (SUZHOU) CO., LTD. is accredited by the American Association for Laboratory Accreditation(A2LA). Certificate No. 6336.01.

- **Innovation, Science and Economic Development Canada**

SGS-CSTC STANDARDS TECHNICAL SERVICES (SUZHOU) CO., LTD. has been recognized by ISED as an accredited testing laboratory.
CAB identifier: CN0120.
IC#: 27594.

- **FCC –Designation Number: CN1312**

SGS-CSTC STANDARDS TECHNICAL SERVICES (SUZHOU) CO., LTD. has been recognized as an accredited testing laboratory.
Designation Number: CN1312.
Test Firm Registration Number: 717327

## 1.5 General Description of EUT

| | | | |
|---|---|---|---|
| **Device Type:** | portable device | | |
| **Exposure Category:** | uncontrolled environment / general population | | |
| **Product Name:** | Smartphone | | |
| **Model No.(EUT):** | X800 | | |
| **FCC ID:** | WYPS6002 | | |
| **Product Phase:** | Identical Prototype | | |
| **IMEI:** | 351348280187947/351348280187954 | | |
| **Hardware Version:** | V1.0 | | |
| **Software Version:** | X80.0-06-14.0-19.50.00 | | |
| **Antenna Type:** | Inner Antenna | | |
| **Modulation Mode:** | GSM: GMSK, 8PSK; | | |
| | WCDMA: QPSK;16QAM; | | |
| | LTE: QPSK,16QAM,64QAM,256QAM; | | |
| | NR: BPSK,QPSK,16QAM,64QAM,256QAM,CP-OFDM | | |
| | WIFI: DSSS, OFDM; BT: GFSK, π/4DQPSK,8DPSK | | |
| **GPRS Multi-slots Class:** | 12 | **EGPRS Multi-slots Class:** | 33 |
| **HSDPA UE Category:** | 10 | **HSUPA UE Category** | 6 |
| **Power Class** | 4, tested with power level 5(GSM850) | | |
| | 1, tested with power level 0(GSM1900) | | |
| | 3, tested with power control “all 1”(WCDMA Band) | | |
| | 3, tested with power control Max Power(LTE Band) | | |
| **Frequency Bands:** | Band | Tx (MHz) | Rx (MHz) |
| | GSM850 | 824 - 849 MHz | 869 - 894 MHz |
| | GSM1900 | 1850 - 1910 MHz | 1930 - 1990 MHz |
| | WCDMA Band II | 1850 -1910 MHz | 1930 - 1990 MHz |
| | WCDMA Band IV | 1710 -1755MHz | 2110 - 2155MHz |
| | WCDMA Band V | 824 - 849MHz | 869 - 894MHz |
| | LTE band 2 | 1850 - 1910 MHz | 1930 - 1990 MHz |
| | LTE band 4 | 1710 - 1755 MHz | 2110 - 2155 MHz |
| | LTE band 5 | 824 - 849 MHz | 869 - 894 MHz |
| | LTE band 7 | 2500 - 2570 MHz | 2620 - 2690 MHz |
| | LTE band 12 | 699 - 716 MHz | 729 - 746 MHz |
| | LTE band 13 | 777 - 787 MHz | 746 - 756 MHz |
| | LTE band 14 | 788 - 798 MHz | 758 - 768 MHz |
| | LTE band 25 | 1850 - 1915 MHz | 1930 - 1995 MHz |
| | LTE band 26 | 814 - 849 MHz | 859 - 894 MHz |
| | LTE band 30 | 2305 - 2315 MHz | 2350 - 2360 MHz |
| | LTE band 38 | 2570 - 2620 MHz | 2570 - 2620 MHz |
| | LTE band 41 | 2496 - 2690 MHz | 2496 - 2690 MHz |
| | LTE band 42 | 3400 - 3600 MHz | 3400 - 3600 MHz |
| | LTE band 48 | 3550 - 3700 MHz | 3550 - 3700 MHz |

| | | | |
|---|---|---|---|
| | LTE band 66 | 1710 - 1780 MHz | 2110 - 2200 MHz |
| | LTE band 71 | 663 - 698 MHz | 617 - 652 MHz |
| | FR1 n2 | 1850 - 1910 MHz | 1930 - 1990 MHz |
| | FR1 n5 | 824 - 849 MHz | 869 - 894 MHz |
| | FR1 n7 | 2500 - 2570 MHz | 2620 - 2690 MHz |
| | FR1 n14 | 788 - 798 MHz | 758- 768 MHz |
| | FR1 n25 | 1850 - 1915 MHz | 1930 - 1995 MHz |
| | FR1 n26 | 814 - 849 MHz | 859 - 894 MHz |
| | FR1 n38 | 2570 - 2620 MHz | 2570 - 2620 MHz |
| | FR1 n41 | 2496 - 2690 MHz | 2496 - 2690 MHz |
| | FR1 n48 | 3550 - 3700 MHz | 3550 - 3700 MHz |
| | FR1 n66 | 1710 - 1780 MHz | 2110 - 2200 MHz |
| | FR1 n70 | 1695 - 1710 MHz | 1995 - 2020 MHz |
| | FR1 n71 | 663 - 698 MHz | 617 - 652 MHz |
| | FR1 n77 | 3300 - 4200 MHz | 3300 - 4200 MHz |
| | FR1 n78 | 3300 - 3800 MHz | 3300 - 3800 MHz |
| | FR1 n77 | 3450 - 3550 MHz | 3450 - 3550 MHz |
| | | 3700 - 3980 MHz | 3700 - 3980 MHz |
| | WLAN2.4GHz | 2412-2462 MHz | 2412-2462 MHz |
| | WLAN5GHz | 5180~5240MHz | 5180~5240MHz |
| | | 5260~5320MHz | 5260~5320MHz |
| | | 5500~5720MHz | 5500~5720MHz |
| | | 5745~5825MHz | 5745~5825MHz |
| | WLAN6GHz | 5925-6425MHz | 5925-6425MHz |
| | Bluetooth | 2400~2483.5 | 2400~2483.5 |
| **Battery Information 1#:** | Model: | BAT-05000-21S | |
| | Normal Voltage: | 3.87V | |
| | Rated capacity: | 5000 mAh | |
| | Manufacturer1: | Shenzhen Aerospace Electronic Co., Ltd. | |
| **Battery Information 2#:** | Model: | BAT-05000-21S | |
| | Normal Voltage: | 3.87V | |
| | Rated capacity: | 5000 mAh | |
| | Manufacturer1: | Tianjin Lishen Juyuan New Energy Technology Co., Ltd. | |

Note:
*Since the above data and/or information is provided by the client relevant results or conclusions of this report are only made for these data and/or information, SGS is not responsible for the authenticity, integrity and results of the data and information and/or the validity of the conclusion.
Remark:
As above information is provided and confirmed by the applicant. SGS is not liable to the accuracy, suitability, reliability or/and integrity of the information.

### 1.5.1 DUT Antenna Locations

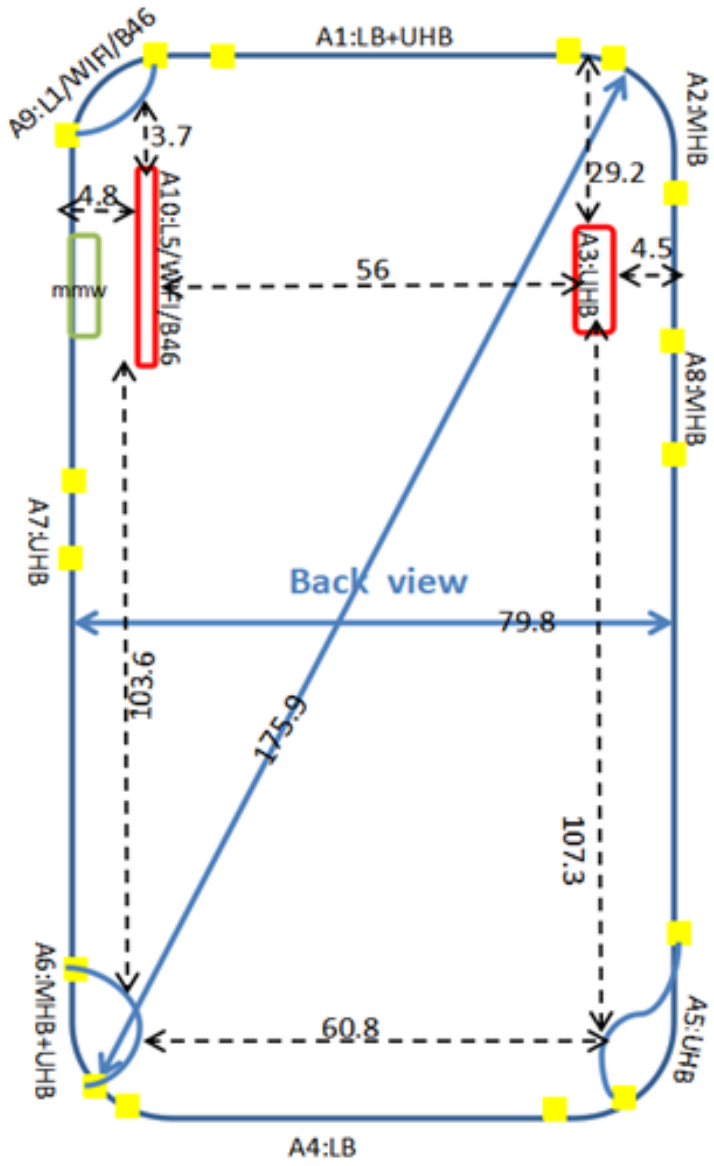


Note:
1) The diversity Antenna does not support transmitter function.

### 1.5.2 List of air interfaces/frequency bands

| Air Interface | Band (MHz) | Type | ANSI C63.19 Tested | Simultaneous Transmitter | Name of Voice Service | Power Reduction |
|---|---|---|---|---|---|---|
| **GSM** | 850 | VO | Yes | BT, Wi-Fi | CMRS Voice | NO |
| | 1900 | | | | | |
| | EDGE | VD | Yes | | Google Meet* | |
| **WCDMA** | Band II | VO | Yes | BT, Wi-Fi | CMRS Voice | NO |
| | Band IV | | | | | |
| | Band V | | | | | |
| | HSPA | VD | Yes | | Google Meet* | |
| **LTE FDD** | LTE band 2 | VD | Yes | BT, Wi-Fi | VoLTE<br>Google Duo* | NO |
| | LTE band 4 | | | | | |
| | LTE band 5 | | | | | |
| | LTE band 7 | | | | | |
| | LTE band 12 | | | | | |
| | LTE band 13 | | | | | |
| | LTE band 14 | | | | | |
| | LTE band 25 | | | | | |
| | LTE band 26 | | | | | |
| | LTE band 30 | | | | | |
| | LTE band 66 | | | | | |
| | LTE band 71 | | | | | |
| **LTE TDD** | LTE band 38 | VD | Yes | BT, Wi-Fi | VoLTE<br>Google Duo* | NO |
| | LTE band 41 | | | | | |
| | LTE band 42 | | | | | |
| | LTE band 48 | | | | | |
| **FR1 FDD** | FR1 n2 | DT | Yes | BT, Wi-Fi | VoNR<br>Google Duo* | NO |
| | FR1 n5 | | | | | |
| | FR1 n7 | | | | | |
| | FR1 n14 | | | | | |
| | FR1 n25 | | | | | |
| | FR1 n26 | | | | | |
| | FR1 n66 | | | | | |
| | FR1 n70 | | | | | |
| | FR1 n71 | | | | | |
| **FR1 TDD** | FR1 n38 | DT | Yes | BT, Wi-Fi | VoNR<br>Google Duo* | NO |
| | FR1 n41 | | | | | |
| | FR1 n48 | | | | | |
| | FR1 n77 | | | | | |
| | FR1 n78 | | | | | |
| **Wi-Fi** | 2450 | VD | Yes | WWAN | Google Meet* | NO |
| | 5200 | | | | | |
| | 5300 | | | | | |
| | 5500 | | | | | |
| | 5800 | | | | | |
| | U-NII 5 | | | | | |
| **BT** | 2450 | DT | No(1) | WWAN | NA | NO |
| VO: Legacy Cellular Voice Service | | | | | | |

DT: Digital Transport (no voice)
VD: IP Voice Service over Digital Transport
*ANSI C63.19-2019 use table 6.1 to establish the Normal speech input level and NOTE 2 of table 6.1 identifies the group of VoIP voice services that use −16 dBm0 as the normal speech input level.
Remark:
1.The WLAN6GHz U-NII 6/7/8 were above 6GHz and were not evaluated due to outside of the current scope of ANSI C63.19 and FCC HAC regulations.
2. The WLAN6GHz UNI-5 was evaluated for operations which are entirely below 6GHz, above 6 GHz were not evaluated due outside of the current scope of ANSI C63.19 and FCC HAC regulations.
3. Because features of Google Meet allow the option of voice-only communications, Meet has been tested for HAC/T-Coil compatibility to ensure the best user experience.
4. The Google Meet and google Fi the audio path, parameter and audio codec are all the same, therefore, the Google Meet is evaluation for this device to show compliance.

## 1.6 Test Specification

| Identity | Document Title |
|---|---|
| CFR 47 FCC Part 20 | §20.19 Hearing aid-compatible mobile handsets. |
| ANSI C63.19-2019 | American National Standard for Methods of Measurement of Compatibility between Wireless Communication Devices |
| KDB 285076 D01 | HAC Guidance v06r04 |

## 1.7 ANSI C63.19-2019 limits

| Emission Categories | E-field emissions dB(V/m) | | |
|---|---|---|---|
| | < 960 MHz | 960MHz-2000MHz | >2000 MHz |
| E field level | <= 39dB (V/m) | <= 36dB (V/m) | <= 35dB (V/m) |

Table 1： Telephone near-field categories in linear units

# 2 Calibration certificate

| | |
|---|---|
| Temperature | Min. = 18°C, Max. = 25 °C |
| Relative humidity | Min. = 30%, Max. = 70% |

Table 2： The Ambient Conditions

# 3 HAC (T Coil) Measurement System

## 3.1 Measurement System Diagram for SPEAG Robotic

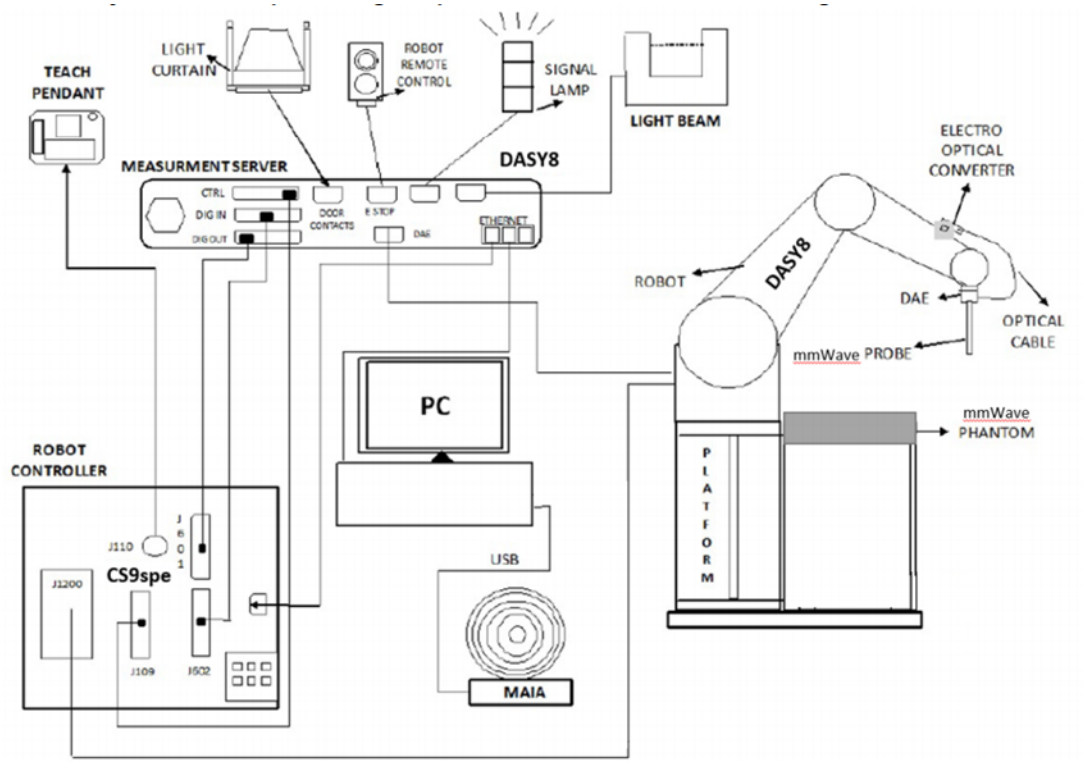


Fig. 1. The SPEAG Robotic Diagram

The DASY8 system for performing compliance tests consists of the following items:

- A standard high precision 6-axis robot (Stabile RX family) with controller, teach pendant and software. An arm extension is for accommodating the data acquisition electronics (DAE).
- An Audio Magnetic probe.
- A data acquisition electronics (DAE) which performs the signal amplification, signal multiplexing, AD-conversion, offset measurements, mechanical surface detection, collision detection, etc. The unit is battery powered with standard or rechargeable batteries. The signal is optically transmitted to the EOC.
- The Electro-optical converter (EOC) performs the conversion between optical and electrical of the signals for the digital communication to the DAE and for the analog signal from the optical surface detection. The EOC is connected to the measurement server.
- The function of the measurement server is to perform the time critical tasks such as signal filtering, control of the robot operation and fast movement interrupts.
- A probe alignment unit which improves the (absolute) accuracy of the probe positioning.
- A computer operating Windows system.
- DASY8 software.
- Remote control with teach pendant and additional circuitry for robot safety such as warning lamps, etc.
- The Test Arch SAM phantom
- The device holder for handheld mobile phones.
- Validation dipole kits allowing to validate the proper functioning of the system.

## 3.2 E-Field Probe

| | | |
|---|---|---|
| Construction | One dipole parallel, two dipoles normal to probe axis<br>Built-in shielding against static charges PEEK enclosure material | <br>EF3DV3 E-Field Probe |
| Calibration | In air from 100 MHz to 6.0 GHz<br>(absolute accuracy ±6.0%, k=2) | |
| Frequency | (extended to 20 MHz for MRI),<br>Linearity: ± 0.2 dB (100 MHz to 6 GHz) | |
| Directivity | ± 0.2 dB in air (rotation around probe axis)<br>± 0.4 dB in air (rotation normal to probe axis) | |
| Dynamic Range | 2 V/m to > 1000 V/m; Linearity: ± 0.2 dB | |
| Dimensions | Tip diameter: 8 mm<br>Distance from probe tip to dipole centers: 2.5 mm | |

## 3.3 Test Arch

| | | |
|---|---|---|
| Description | Enables easy and well defined positioning of the phone and validation dipoles as well as simple teaching of the robot. | 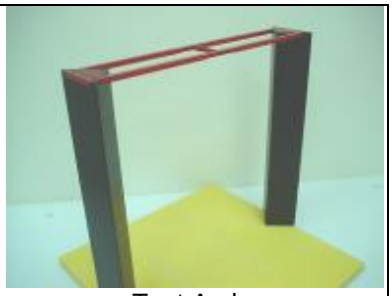 <br>Test Arch |
| Dimensions | length: 370 mm<br>width: 370 mm<br>height: 370 mm | |

## 3.4 Phone Holder

| | | |
|---|---|---|
| Description | Supports accurate and reliable positioning of any phone<br>Effect on near field <+/- 0.5 dB | <br>Phone Holder |

# 4 Measurement uncertainty evaluation

| Uncertainty Component | Uncertainty Value (%) | Probability Distribution | Divisor | ci € | Standard Uncertainty € (%) |
|---|---|---|---|---|---|
| **Measurement system** | | | | | |
| Probe calibration | ±5.1 | N | 1 | 1 | ±5.1 |
| Axial isotropy | ±4.7 | R | $\sqrt{3}$ | 1 | ±2.7 |
| Sensor position | ±16.5 | R | $\sqrt{3}$ | 1 | ±9.5 |
| Boundary effect | ±2.4 | R | $\sqrt{3}$ | 1 | ±1.4 |
| Phantom Boundary Effect | ±7.2 | R | $\sqrt{3}$ | 1 | ±4.1 |
| Linearity | ±4.7 | R | $\sqrt{3}$ | 1 | ±2.7 |
| Scaling with PMR calibration | ±10.0 | R | $\sqrt{3}$ | 1 | ±5.8 |
| System Detection limit | ±1.0 | R | $\sqrt{3}$ | 1 | ±0.6 |
| Readout Electronics | ±0.3 | N | $\sqrt{3}$ | 1 | ±0.3 |
| Response time | ±0.8 | R | $\sqrt{3}$ | 1 | ±0.5 |
| Integration time | ±2.6 | R | $\sqrt{3}$ | 1 | ±1.5 |
| RF ambient conditions | ±3.0 | R | $\sqrt{3}$ | 1 | ±1.7 |
| RF reflection | ±12.0 | R | $\sqrt{3}$ | 1 | ±6.9 |
| Probe positioner | ±1.2 | R | $\sqrt{3}$ | 1 | ±0.7 |
| Probe positioning | ±4.7 | R | $\sqrt{3}$ | 1 | ±2.7 |
| Extrapolation and interpolation | ±1.0 | R | $\sqrt{3}$ | 1 | ±0.6 |
| **Related to test samples** | | | | | |
| Device Positioning Vertical | ±4.7 | R | $\sqrt{3}$ | 1 | ±2.7 |
| Device Positioning Lateral | ±1.0 | R | $\sqrt{3}$ | 1 | ±0.6 |
| Device Holder and Phantom | ±2.4 | R | $\sqrt{3}$ | 1 | ±1.4 |
| Power drift | ±5.0 | R | $\sqrt{3}$ | 1 | ±2.9 |
| **Phantom and Setup Related** | | | | | |
| Phantom Thickness | ±2.4 | R | $\sqrt{3}$ | 1 | ±1.4 |
| Combined Std. Uncertainty | $u_c^{'} = \sqrt{\sum_{i=1}^{21} c_i^2 u_i^2}$ | | | | **±16.3** |
| Expanded Std. Uncertainty on Power (K=2) | | | | | **±32.6** |
| Expanded Std. Uncertainty on Field (K=2) | | | | | **±16.3** |

Table 3： Measurement uncertainties for RF

# 5 RF Emission Measurements Reference and Plane

Fig.3 illustrate the references and reference plane that shall be used in a typical EUT emissions measurement. The principle of this section is applied to EUT with similar geometry. Please refer to Appendix C for the setup photographs.

- The area is 5 cm by 5 cm.
- The area is centered on the audio frequency output transducer of the EUT.
- The area is in a reference plane, which is defined as the planar area that contains the highest point in the area of the phone that normally rests against the user's ear. It is parallel to the centerline of the receiver area of the phone and is defined by the points of the receiver-end of the EUT handset, which, in normal handset use, rest against the ear.
- The measurement plane is parallel to, and 10 mm in front of, the reference plane.

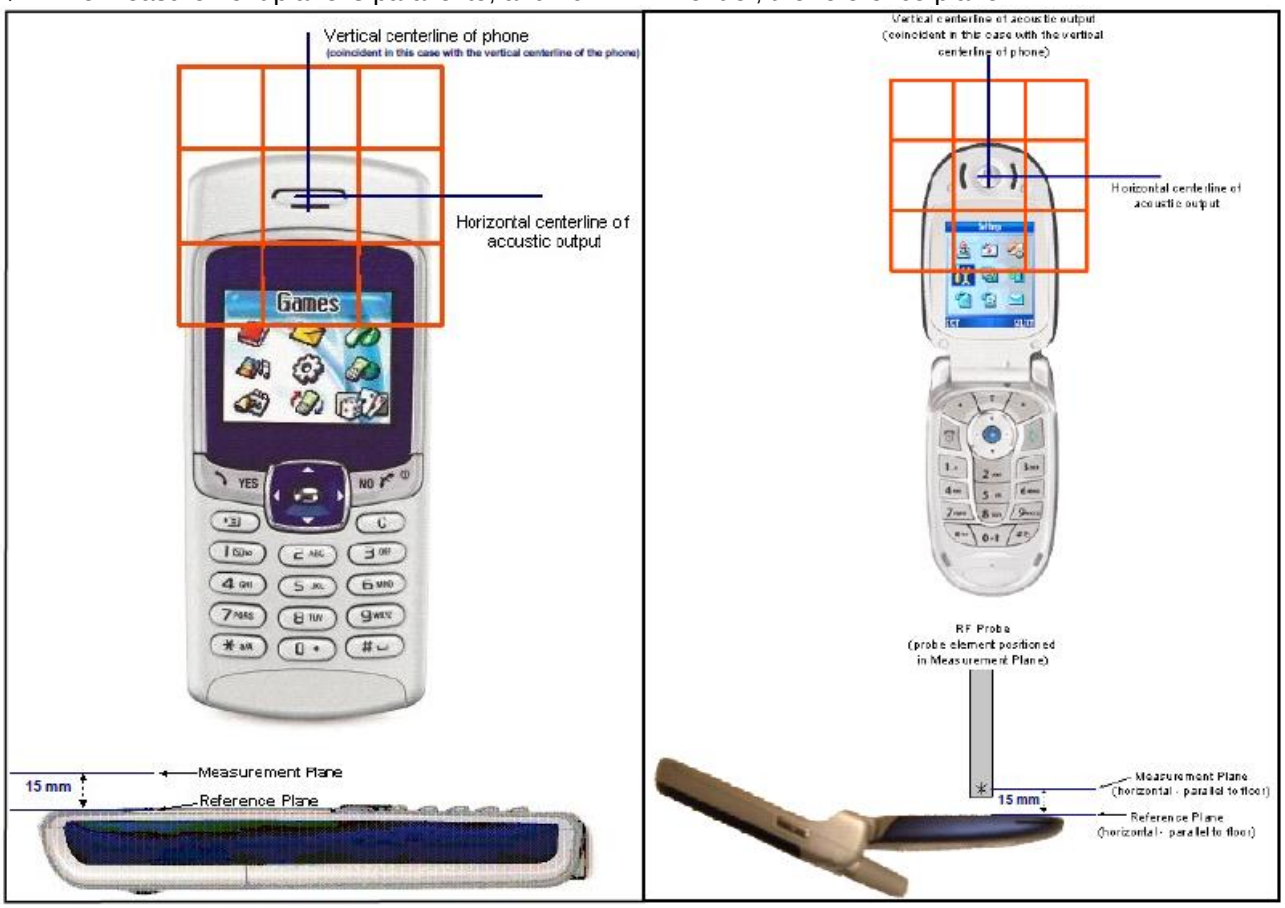


**Fig.3 WD reference and plane for RF emission measurements**

# 6 System Verification Procedure

## 6.1 System Check

Place a dipole antenna meeting the requirements given in ANSI C63.19-2019 in the position normally occupied by the WD. The dipole antenna serves as a known source for an electrical and magnetic output. Position the E-field probe so that the following occurs:

• The probes and their cables are parallel to the coaxial feed of the dipole antenna

• The probe cables and the coaxial feed of the dipole antenna approach the measurement area from opposite directions

• The center point of the probe element(s) are 15 mm from the closest surface of the dipole elements.

Scan the length of the dipole with the E-field probe and record the two maximum values found near the dipole ends. Average the two readings and compare the reading to the expected value in the calibration certificate or the expected value in this standard.

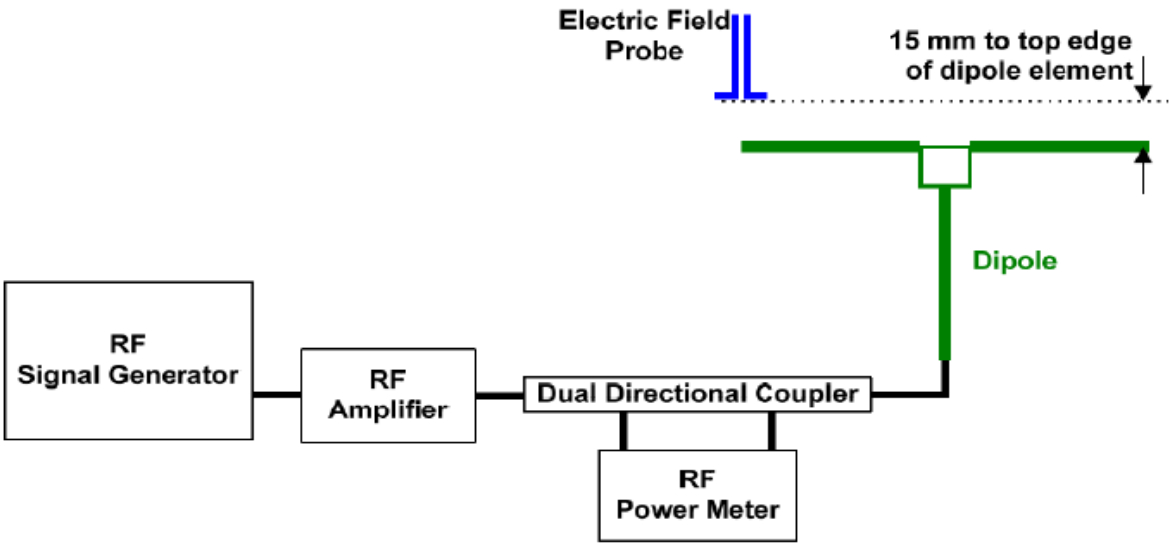


Fig.4 System verification

## 6.2 System Check Result

| Mode | Frequency (MHz) | Input Power (mW) | E-Field (V/m) | Target Value (V/m) | Deviation (%) | Limit (%) | Test Date |
|---|---|---|---|---|---|---|---|
| CW | 835 | 100 | 105.3 | 110.3 | -4.53 | ±12.8 | 2025/6/9 |
| CW | 1880 | 100 | 89.5 | 86.9 | 2.99 | ±12.8 | 2025/6/9 |

**Note:**
* Please refer to the appendix A for detailed measurement data and plot.
** Target value is provided by SPEAD in the calibration certificate of specific dipoles.
*** Deviation (%) = 100 * (Measured value minus Target value) divided by Target value.
**** ANSI C63.19 requires values within ± 18% are acceptable.

# 7 Modulation Interference Factor

For any specific fixed and repeatable modulated signal, a modulation interference factor (MIF, expressed in dB)
may be developed that relates its interference potential to its steady state rms signal level or average power level.
This factor is a function only of the audio-frequency amplitude modulation characteristics of the signal and is the
same for field-strength and conducted power measurements. It is important to emphasize that the MIF is valid only for a specific repeatable audio-frequency amplitude modulation characteristic. Any change in modulation
characteristic requires determination and application of a new MIF
The Modulation Interference factor (MIF, in dB) is added to the measured average E-field (in dBV/m) and converts it to the RF Audio Interference level (in dBV/m). This level considers the audible amplitude modulation components in the RF E-field. CW fields without amplitude modulation are assumed to not interfere with the hearing aid electronics.
Modulations without time slots and low fluctuations at low frequencies have low MIF values, TDMA modulations
with narrow transmission and repetition rates of few 100 Hz have high MIF values and give similar classifications as ANSI C63.19-2019.
DASY8 is therefore using the indirect measurement method according to ANSI C63.19-2019 which is the primary method. These near field probes read the averaged E-field measurement. Especially for the new high peak-to-average (PAR) signal types, the probes shall be linearized by PMR calibration in order to not overestimate the field reading. Probe Modulation Response (PMR) calibration linearizes the probe response over its dynamic range for specific modulations which are characterized by their UID and result in an uncertainty specified in the probe calibration certificate. The MIF is characteristic for a given waveform envelope and can be used as a constant conversion factor if the probe has been PMR calibrated.
The evaluation method for the MIF is defined in ANSI C63.19-2019 section D.7. An RMS demodulated RF signal is fed to a spectral filter (similar to an A weighting filter) and forwarded to a temporal filter acting as a quasi-peak
detector. The averaged output of these filtering is scaled to a 1 kHz 80% AM signal as reference. MIF measurement requires additional instrumentation and is not well suited for evaluation by the end user with reasonable uncertainty.
It may alliteratively be determined through analysis and simulation, because it is constant and characteristic for a
communication signal. DASY8 uses well-defined signals for PMR calibration. The MIF of these signals has been
determined by simulation and it is automatically applied.

The MIF measurement uncertainty is estimated as follows, declared by HAC equipment provider SPEAG, for modulation frequencies from slotted waveforms with fundamental frequency and at least 2 harmonics within 10 kHz:
1. 0.2 dB for MIF: -7 to +5 dB
2. 0.5 dB for MIF: -13 to +11 dB
3. 1 dB for MIF: > -20 dB
MIF values applied in this test report were provided by the HAC equipment provider of SPEAG, and the worst
values for all air interfaces are listed below to be determine the Low-power Exemption.

| SPEAG UID | UID version | Communication system | MIF (dB) |
|---|---|---|---|
| 10021 | DAC | GSM-FDD (TDMA, GMSK) | 3.63 |
| 10025 | DAC | EDGE-FDD (TDMA, 8PSK, TN 0) | 3.75 |
| 10460 | AAA | UMTS-FDD (WCDMA, AMR) | -25.43 |
| 10225 | AAA | UMTS-FDD (HSPA+) | -20.39 |
| 10169 | CAE | LTE-FDD (SC-FDMA, 1 RB, 20 MHz, QPSK) | -15.63 |
| 10170 | CAE | LTE-FDD (SC-FDMA,1RB, 20 MHz,16-QAM) | -9.76 |
| 10172 | CAG | LTE-TDD (SC-FDMA, 1 RB, 20 MHz, QPSK) | -1.62 |
| 10173 | CAG | 5G NR (CP-OFDM, 1 RB, 15 MHz, QPSK, 15 kHz) | -12.08 |
| 10973 | CAG | 5G NR (DFT-s-OFDM, 1 RB, 100 MHz, QPSK, 30 kHz) | -1.64 |
| 10173 | CAG | LTE-TDD (SC-FDMA,1RB, 20 MHz,16-QAM) | -1.44 |
| 10061 | CAB | IEEE 802.11b WiFi 2.4 GHz (DSSS, 11 Mbps) | -2.02 |
| 10077 | CAB | IEEE 802.11g WiFi 2.4 GHz (DSSS-OFDM, 54 Mbps) | 0.12 |
| 10427 | AAB | IEEE 802.11n (HT Green eld, 150 Mbps, 64-QAM) | -13.44 |
| 10069 | CAC | IEEE 802.11a/h WiFi 5 GHz (OFDM, 54 Mbps) | -3.15 |
| 10616 | AAB | IEEE 802.11ac WiFi (40MHz, MCS0, 90pc duty cycle) | -5.57 |
| 10671 | AAB | IEEE 802.11ax WiFi (20MHz, MCS0, 90pc duty cycle) | -5.58 |

# 8 HAC Measurement Procedure

**The evaluation was performed with the following procedure:**
a) Confirm the proper operation of the field probe, probe measurement system, and other instrumentation and the positioning system.
b) Position the WD in its intended test position.
c) Set the WD to transmit a fixed and repeatable combination of signal power and modulation characteristic that is representative of the worst case (highest interference potential) encountered in normal use. Transiently occurring start-up, changeover, or termination conditions, or other operations likely to occur less than 1% of the time during normal operation, may be excluded from consideration.
d) The center subgrid shall be centered on the T-Coil mode perpendicular measurement point or the acoustic output, as appropriate. Locate the field probe at the initial test position in the 50 mm by 50 mm grid, which is contained in the measurement plane, refer to illustrated in Figure 3. If the field alignment method is used, align the probe for maximum field reception.
e) Record the reading at the output of the measurement system.
f) Scan the entire 50 mm by 50 mm region in equally spaced increments and record the reading at each measurement point. The distance between measurement points shall be sufficient to assure the identification of the maximum reading.
g) Identify the five contiguous subgrids around the center subgrid whose maximum reading is the lowest of all available choices. This eliminates the three subgrids with the maximum readings. Thus, the six areas to be used to determine the WD's highest emissions are identified.
h) Identify the maximum reading within the no excluded subgrids identified in step g).
i) Convert the maximum reading identified in step h) to RF audio interference level, in, V/m, by taking the square root of the reading and then dividing it by the measurement system transfer function, established in 5.5.1.1. Convert the result to dB(V/m) by taking the base-10 logarithm and multiplying it by 20.
Indirect measurement method
Replacing step i) of 5.5.1.2, the RF audio interference level in dB(V/m) is obtained by adding the MIF (in dB) to the maximum steady-state rms field-strength reading, in dB(V/m), from step h). Use this result to determine the category rating.
j) Compare this RF audio interference level with the categories in Clause 8 and record the resulting WD category rating.
k) For the T-Coil mode M-rating assessment, determine whether the chosen perpendicular measurement point is contained in an included subgrid of the first scan. If so, then a second scan is not necessary. The first scan and resultant category rating may be used for the T-Coil mode M rating.
Otherwise, repeat step a) through step i), with the grid shifted so that it is centered on the perpendicular measurement point. Record the WD category rating.

# 9 HAC RF Measurement Results

## 9.1 Max Tune-up

| Ant 1 | | | | |
|---|---|---|---|---|
| Frequency Band | | Channel | Frequency(MHz) | Tune up Power (dBm) |
| GSM | GSM850 | 190 | 836.6 | 31.00 |
| | EDGE850 | 190 | 836.6 | 25.00 |
| WCDMA | Band V | 4183 | 836.6 | 21.00 |
| | HSPA | 4183 | 836.6 | 18.00 |
| LTE FDD | Band 5 | 20525 | 836.5 | 21.00 |
| | Band 12 | 23095 | 707.5 | 24.00 |
| | Band 13 | 23230 | 782 | 22.50 |
| | Band 14 | 23790 | 710 | 22.50 |
| | Band 26 | 26865 | 831.5 | 21.00 |
| | Band 71 | 133297 | 680.5 | 23.50 |
| 5G NR FDD | n5 | 167300 | 836.5 | 21.00 |
| | n14 | 158600 | 793 | 22.50 |
| | n26 | 166300 | 836.5 | 21.00 |
| | n71 | 136100 | 680.5 | 23.50 |

| Ant 2 | | | | |
|---|---|---|---|---|
| Frequency Band | | Channel | Frequency(MHz) | Tune up Power (dBm) |
| GSM | GSM1900 | 661 | 1880 | 26.50 |
| | EDGE1900 | 661 | 1880 | 22.50 |
| WCDMA | Band II | 9400 | 1880 | 18.50 |
| | HSPA | 9400 | 1880 | 15.50 |
| | Band IV | 1412 | 1732.4 | 18.50 |
| | HSPA | 1412 | 1732.4 | 16.00 |
| LTE FDD | Band 2 | 18900 | 1880 | 18.50 |
| | Band 4 | 20175 | 1732.5 | 18.50 |
| | Band 7 | 21100 | 2535 | 19.00 |
| | Band 25 | 26365 | 1882.5 | 18.50 |
| | Band 30 | 27710 | 2310 | 21.00 |
| | Band 66 | 132322 | 1745 | 21.00 |
| LTE TDD | Band 38 | 38000 | 2595 | 19.50 |
| | Band 41 | 40620 | 2593 | 21.50 |
| FR1 FDD | N2 | 375960 | 1879.8 | 17.50 |
| | N7 | 507000 | 2535 | 17.50 |
| | N25 | 376520 | 1882.6 | 17.50 |
| | N30 | 462000 | 2310 | 22.00 |
| | N66 | 349000 | 1745 | 18.50 |
| | N70 | 340500 | 1702.5 | 24.00 |
| FR1 TDD | N38 | 519000 | 2595 | 16.00 |
| | N41 | 518598 | 2592.99 | 17.50 |

| Ant 3 | | | | |
|---|---|---|---|---|
| Frequency Band | | Channel | Frequency(MHz) | Tune up Power (dBm) |
| LTE TDD | Band 42 | 42590 | 3500 | 21.00 |
| | Band 48 | 55990 | 3625 | 20.50 |
| 5G NR TDD | n48 | 641666 | 3624.99 | 20.50 |
| | n77 | 656000 | 3840 | 21.00 |
| | n78 | 636666 | 3549.99 | 22.00 |

| Ant 5 | | | | |
|---|---|---|---|---|
| Frequency Band | | Channel | Frequency(MHz) | Tune up Power (dBm) |
| LTE FDD | Band 2 | 18900 | 1880 | 25.00 |
| | Band 4 | 20175 | 1732.5 | 25.00 |
| | Band 7 | 21100 | 2535 | 25.00 |
| | Band 25 | 26365 | 1882.5 | 25.00 |
| | Band 66 | 132322 | 1745 | 25.00 |
| 5G NR FDD | n7 | 507000 | 2535 | 25.00 |

| Ant 7 | | | | |
|---|---|---|---|---|
| Frequency Band | | Channel | Frequency(MHz) | Tune up Power (dBm) |
| 5G NR TDD | n77 | 656000 | 3840 | 24.00 |
| | n78 | 636666 | 3549.99 | 23.00 |

| Ant 9+10 | | | | |
|---|---|---|---|---|
| Frequency Band | | Channel | Frequency(MHz) | Tune up Power (dBm) |
| 2.4GHz WLAN | 802.11b | 6 | 2437 | 17.50 |
| | 802.11g | 6 | 2437 | 17.50 |
| | 802.11n-HT20 | 6 | 2437 | 17.50 |
| | 802.11n-HT40 | 6 | 2437 | 17.50 |
| | 802.11ac-VHT20 | 6 | 2437 | 17.50 |
| | 802.11ac-VHT40 | 6 | 2437 | 17.50 |
| | 802.11ax-HE20 | 6 | 2437 | 17.50 |
| | 802.11ax-HE40 | 6 | 2437 | 17.50 |
| 5GHz WLAN | 802.11a | 40 | 5200 | 22.00 |
| | 802.11n-HT20 | 40 | 5200 | 22.00 |
| | 802.11n-HT40 | 40 | 5200 | 22.00 |
| | 802.11ac-VHT20 | 40 | 5200 | 22.00 |
| | 802.11ac-VHT40 | 40 | 5200 | 22.00 |
| | 802.11ac-VHT80 | 40 | 5200 | 22.00 |
| | 802.11ac-VHT160 | 40 | 5200 | 22.00 |
| | 802.11ax-HE20 | 40 | 5200 | 22.00 |
| | 802.11ax-HE40 | 40 | 5200 | 22.00 |
| | 802.11ax-HE80 | 40 | 5200 | 22.00 |
| | 802.11ax-HE160 | 40 | 5200 | 22.00 |
| 6GHz WLAN | 802.11ax-HE20 | 5 | 5975 | 19.00 |
| | 802.11ax-HE40 | 5 | 5975 | 19.00 |
| | 802.11ax-HE80 | 5 | 5975 | 19.00 |
| | 802.11ax-HE160 | 5 | 5975 | 19.00 |

## 9.2 Conducted RF Output Power

| GSM 850 Ant 1 | | | | | |
|---|---|---|---|---|---|
| Burst Output Power(dBm) | | | | | |
| Channel | | 128 | 190 | 251 | Tune up |
| GSM(GMSK) | GSM | 31.82 | 31.79 | 31.80 | 33.00 |

| GSM 1900 Ant 2 | | | | | |
|---|---|---|---|---|---|
| Burst Output Power(dBm) | | | | | |
| Channel | | 512 | 661 | 810 | Tune up |
| GSM(GMSK) | GSM | 24.76 | 24.79 | 24.75 | 26.00 |

## 9.3 Low-power Exemption

The primary method for establishing the RF interference potential of a WD is based on conducted power to the antenna. The waveform-specific modulation interference factor (MIF) is measured separately and added to the measured average conducted power, in dBm.

The WD's conducted power must be at or below either the stated RFAIPL (Table 4.1) or the stated peak power level (Table 4.2), or the average near-field emissions over the measurement area must be at or below the stated RFAIL (Table 4.3), or the stated peak field strength (Table 4.4).

The WD may demonstrate compliance by meeting any of these four requirements, but it must do so in each of its operating bands at its established worst-case normal speech-mode operating condition.

**Table 4.1—Wireless device RF audio interference power level**

| Frequency range (MHz) | $RF_{AIPL}$ (dBm) |
|---|---|
| <960 | 29 |
| 960–2000 | 26 |
| >2000 | 25 |

**Table 4.2—Wireless device RF peak power level**

| Frequency range (MHz) | $RF_{Peak\ Power}$ (dBm) |
|---|---|
| < 960 | 35 |
| 960–2000 | 32 |
| >2000 | 31 |

**Table 4.3—Wireless device RF audio interference level**

| Frequency range (MHz) | $RF_{AIL}$ [dB(V/m)] |
|---|---|
| ≤960 | 39 |
| 960–2000 | 36 |
| >2000 | 35 |

**Table 4.4—Wireless device RF peak near-field level**

| Frequency range (MHz) | $RF_{peak}$ [dB(V/m)] |
|---|---|
| ≤960 | 45 |
| 960–2000 | 42 |
| >2000 | 41 |

An analysis shall be performed following the guidance of the RF air interface technology being evaluated. Factors that will affect the RF interference potential shall be evaluated, and the worst-case operating mode shall be identified and used in the evaluation. Any factor that can affect the RF interference potential shall be evaluated.

Examples of such factors are those that will change the RF signal envelope, such as discontinuous transmission due to data load, power management, or configuration options of the RF air interface technology.

RF audio interference power level is compared to the limits in Sec.5 Table 4.1.

| Ant 1 | | | | |
|---|---|---|---|---|
| Air Interface | Max Average Antenna Input Power (dBm) | Worst Case MIF (dB) | Power + MIF(dB) | C63.19 test required |
| GSM850 | 31.00 | 3.63 | 34.63 | YES |
| EDGE850 | 25.00 | 3.75 | 28.75 | NO |
| WCDMA | 21.00 | -25.43 | -4.43 | NO |
| WCDMA - HSPA | 18.00 | -20.39 | -2.39 | NO |
| LTE - FDD | 24.00 | -9.76 | 14.24 | NO |
| 5G FR1 - FDD | 23.50 | -12.08 | 11.42 | NO |

Note: Select tests with highest Power+MIF values for the same frequency band.

| Ant 2 | | | | |
|---|---|---|---|---|
| Air Interface | Max Average Antenna Input Power (dBm) | Worst Case MIF (dB) | Power + MIF(dB) | C63.19 test required |
| GSM1900 | 26.50 | 3.63 | 30.13 | YES |
| EDGE1900 | 22.50 | 3.75 | 26.25 | NO |
| WCDMA | 18.50 | -25.43 | -6.93 | NO |
| WCDMA - HSPA | 16.00 | -20.39 | -4.39 | NO |
| LTE - FDD | 20.00 | -9.76 | 10.24 | NO |
| LTE - TDD | 21.50 | -1.44 | 20.06 | NO |
| FR1 - FDD | 24.00 | -12.08 | 11.92 | NO |
| FR1 - TDD | 17.50 | -1.64 | 15.86 | NO |

Note: Select tests with highest Power+MIF values for the same frequency band.

| Ant 3 | | | | |
|---|---|---|---|---|
| Air Interface | Max Average Antenna Input Power (dBm) | Worst Case MIF (dB) | Power + MIF(dB) | C63.19 test required |
| LTE - TDD | 21.00 | -1.44 | 19.56 | NO |
| 5G FR1 - TDD | 22.00 | -1.64 | 20.36 | NO |

Note: Select tests with highest Power+MIF values for the same frequency band.

| Ant 5 | | | | |
|---|---|---|---|---|
| Air Interface | Max Average Antenna Input Power (dBm) | Worst Case MIF (dB) | Power + MIF(dB) | C63.19 test required |
| LTE - FDD | 25.00 | -9.76 | 15.24 | NO |
| 5G FR1 - FDD | 25.00 | -12.08 | 12.92 | NO |

Note: Select tests with highest Power+MIF values for the same frequency band.

| Ant 7 | | | | |
|---|---|---|---|---|
| Air Interface | Max Average Antenna Input Power (dBm) | Worst Case MIF (dB) | Power + MIF(dB) | C63.19 test required |
| 5G FR1 - TDD | 24.00 | -1.64 | 22.36 | NO |

Note: Select tests with highest Power+MIF values for the same frequency band.

| Ant 9+10 | | | | |
|---|---|---|---|---|
| Air Interface | Max Average Antenna Input Power (dBm) | Worst Case MIF (dB) | Power + MIF(dB) | C63.19 test required |
| 802.11b | 17.50 | -2.02 | 15.48 | NO |
| 802.11g | 17.50 | 0.12 | 17.62 | NO |
| 802.11n | 22.00 | -13.44 | 8.56 | NO |
| 802.11a | 22.00 | -3.15 | 18.85 | NO |
| 802.11ac | 22.00 | -5.57 | 16.43 | NO |
| 802.11ax | 22.00 | -5.58 | 16.42 | NO |

Note: Select tests with highest Power+MIF values for the same frequency band.

## 9.4 HAC RF Emission Test Results

| Air Interface | Modulation / Mode | Channel | Frequency(MHz) | Ant | Average Antenna Input Power (dBm) | MIF | E-Field (dBV/m) | RF Limit (dB V/m) | RF Pass/Fail | Date |
|---|---|---|---|---|---|---|---|---|---|---|
| GSM850 | GSM Voice | 251 | 848.8 | Ant 1 | 31.80 | 3.63 | 37.86 | 39 | PASS | 2025/6/10 |
| GSM1900 | GSM Voice | 810 | 1909.8 | Ant 2 | 24.75 | 3.63 | 33.7 | 36 | PASS | 2025/6/9 |

**Remark:**

1. The detail RF Emission results please refer to appendix B.

# 10 Equipment list

| Test Equipment | | Manufacturer | Model No. | Inventory No. | Cal. Date | Cal. Due date |
|---|---|---|---|---|---|---|
| ☒ | Software | SPEAG | D8 HAC V1.2 | NA | NCR | NCR |
| ☒ | DAE | SPEAG | DAE4 | 1374 | 2024-10-30 | 2025-10-29 |
| ☒ | E-Field Probe | SPEAG | EF3DV3 | 4051 | 2024-08-14 | 2025-08-13 |
| ☒ | Validation Kits | SPEAG | CD835V3 | 1030 | 2024-06-14 | 2027-06-13 |
| ☒ | Validation Kits | SPEAG | CD1880V3 | 1023 | 2024-06-14 | 2027-06-13 |
| ☒ | Test Arch SD HAC | SPEAG | NA | NA | NCR | NCR |
| ☒ | Universal Radio Communication Tester | R&S | CMW500 | 111637 | 2024-09-10 | 2025-09-09 |
| ☒ | RADIO COMMUNICATION TESTR | R&S | CMX500 | 101930 | 2025-01-16 | 2026-01-15 |
| ☒ | Signal Generator | R&S | SMB100A | 182393 | 2025-01-16 | 2026-01-15 |
| ☒ | Preamplifier | Qiji | YX28980933 | 202104001 | NCR | NCR |
| ☒ | Power Sensor | Keysight | U2002H | MY5639004 | 2024-09-10 | 2025-09-09 |
| ☒ | Power Sensor | Agilent | U2002H | MY48200110 | 2024-11-21 | 2025-11-20 |
| ☒ | Coaxial low pass filter | Mini-Circuits | VLF-2500(+) | NA | NCR | NCR |
| ☒ | Coaxial low pass filter | Microlab Fxr | LA-F13 | NA | NCR | NCR |
| ☒ | DC POWER SUPPLY | SAKO | SK1730SL5A | NA | NCR | NCR |
| ☒ | Humidity and Temperature Indicator | MingGao | MingGao | NA | 2024-06-14 | 2025-06-13 |

Note:
1. All the equipments are within the valid period when the tests are performed.

---End of Report---