CE EMC
TEST REPORT

for

AIS Class B Transponder

MODEL: WideLink B600W; WideLink B600

Test Report Number:

T160222W01-RE

Issued to:

Alltek Marine Electronics Corp.

**14F-2, No.237, Sec. 1, Datong Rd., Xizhi District,
New Taipei City, Taiwan, R.O.C.**

Issued by:

Compliance Certification Services Inc.

Xindian Lab.

**No.163-1, Jhongsheng Rd., Xindian Dist.,
New Taipei City, 23151 Taiwan.**

TEL: 886-2-22170894

FAX: 886-2-22171029

Issued Date: January 18, 2017

Testing Laboratory
1108

Note: This report shall not be reproduced except in full, without the written approval of Compliance Certification Services Inc. This document may be altered or revised by Compliance Certification Services Inc. personnel only, and shall be noted in the revision section of the document. The client should not use it to claim product endorsement by TAF, A2LA, NIST or any government agencies. The test results in the report only apply to the tested sample.

Revision History

Rev.		Issue Date		Revisions	Effect Page	Revised By
00		January 18, 2017		Initial Issue	ALL	Andrea Chen

This report shall not be reproduced except in full, without the written approval of Compliance Certification Services.

TABLE OF CONTENTS

1 TEST CERTIFICATION 4

2 TEST RESULT SUMMARY 5

3 EUT DESCRIPTION 6

4 TEST METHODOLOGY 7

4.1. DECISION OF FINAL TEST MODE 7
4.2. EUT SYSTEM OPERATION 7

5 SETUP OF EQUIPMENT UNDER TEST 8

5.1. DESCRIPTION OF SUPPORT UNITS 8
5.2. CONFIGURATION OF SYSTEM UNDER TEST 9

6 FACILITIES AND ACCREDITATIONS 10

6.1. FACILITIES 10
6.2. ACCREDITATIONS 10
6.3. MEASUREMENT UNCERTAINTY 10

7 EMISSION TEST 11

7.1. CONDUCTED EMISSION MEASUREMENT 11
7.2. CONDUCTED EMISSION MEASUREMENT AT TELECOMMUNICATION PORTS 15
7.3. RADIATED EMISSION MEASUREMENT 18
7.4. HARMONICS CURRENT MEASUREMENT 26
7.5. VOLTAGE FLUCTUATION AND FLICKS MEASUREMENT 28

8 IMMUNITY TEST 30

8.1. GENERAL DESCRIPTION 30
8.2. GENERAL PERFORMANCE CRITERIA DESCRIPTION 31
8.3. ELECTROSTATIC DISCHARGE (ESD) 33
8.4. RADIATED, RADIO-FREQUENCY, ELECTROMAGNETIC FIELD (RS) 38
8.5. ELECTRICAL FAST TRANSIENT (EFT) 41
8.6. SURGE IMMUNITY TEST 44
8.7. CONDUCTED RADIO FREQUENCY DISTURBANCES (CS) 47
8.8. VOLTAGE DIP & VOLTAGE INTERRUPTIONS 50

9 PHOTOGRAPHS OF THE TEST CONFIGURATION 52

APPENDIX 1 - PHOTOGRAPHS OF EUT A1-1

This report shall not be reproduced except in full, without the written approval of Compliance Certification Services.

1 TEST CERTIFICATION

Product:	AIS Class B Transponder
Model:	WideLink B600W; WideLink B600
Brand:	AMEC
Applicant:	**Alltek Marine Electronics Corp.** 14F-2, No.237, Sec. 1, Datong Rd., Xizhi District, New Taipei City, Taiwan, R.O.C.
Manufacturer:	**Alltek Marine Electronics Corp.** 14F-2, No.237, Sec. 1, Datong Rd., Xizhi District, New Taipei City, Taiwan, R.O.C.
Tested:	February 25, 2016 ~ April 21, 2016
Test Voltage:	12VDC/24VDC
Applicable Standards:	**ETSI EN 301 489-17 V2.2.1 2012** **ETSI EN 301 489-1 V1.9.2 2011** EN 55022: 2010 / AC: 2011 EN 61000-3-2: 2014 EN 61000-3-3: 2013 EN 61000-4-2: 2009 EN 61000-4-3: 2006 + A1: 2008 + A2: 2010 EN 61000-4-4: 2012 EN 61000-4-5: 2014 EN 61000-4-6: 2014 EN 61000-4-11: 2004

Deviation from Applicable Standard
None

The above equipment has been tested by Compliance Certification Services Inc., and found compliance with the requirements set forth in the technical standards mentioned above. The results of testing in this report apply only to the product/system, which was tested. Other similar equipment will not necessarily produce the same results due to production tolerance and measurement uncertainties.

Approved by:

Sam Hu
Assistant Manager

Reviewed by:

Eva Fan
Supervisor of report document dept.

This report shall not be reproduced except in full, without the written approval of Compliance Certification Services.

2 TEST RESULT SUMMARY

EMISSION			
Standard	**Item**	**Result**	**Remarks**
EN 55022: 2010 / AC: 2011	Conducted (Power Port)	N/A	Please see the page 14
	Conducted (Telecom port)	N/A	Please see the page 17
	Radiated	PASS	Meet Class B limit
EN 61000-3-2: 2014	Harmonic current emissions	N/A	Please see the page 27
EN 61000-3-3: 2013	Voltage fluctuations & flicker	N/A	Please see the page 29

IMMUNITY【 EN 301 489-1 V1.9.2: 2011 】			
Standard	**Item**	**Result**	**Remarks**
EN 61000-4-2: 2009	ESD	PASS	Meets the requirements of Performance Criterion CT&CR
EN 61000-4-3: 2006 + A1: 2008 + A2: 2010	RS	PASS	Meets the requirements of Performance Criterion CT&CR
EN 61000-4-4: 2012	EFT	PASS	Meets the requirements of Performance Criterion CT&CR
EN 61000-4-5: 2014	Surge	N/A	Please see the page 46
EN 61000-4-6: 2014	CS	PASS	Meets the requirements of Performance Criterion CT&CR
EN 61000-4-11: 2004	Voltage dips & voltage variations	N/A	Please see the page 51

Note: 1. The statements of test result on the above are decided by the request of test standard only; the measurement uncertainties are not factored into this compliance determination.
2. The information of measurement uncertainty is available upon the customer's request.

This report shall not be reproduced except in full, without the written approval of Compliance Certification Services.

3 EUT DESCRIPTION

Product	AIS Class B Transponder
Brand Name	AMEC
Model	WideLink B600W; WideLink B600
Applicant	Alltek Marine Electronics Corp.
Housing material	Plastic
Identify Number	T160222W01
Received Date	February 22, 2016
EUT Power Rating	12VDC/24VDC from DC power supply
Hardware	M-PCB-B601MBV2
Software	V1.1.5
Frequency Range	IEEE 802.11b/g/ IEEE 802.11n HT 20 MHz Mode: 2412 ~ 2472 MHz IEEE 802.11n HT 40 MHz Mode: 2422~ 2462 MHz
Transmit Power (mean EIRP)	IEEE 802.11b Mode: 19.53dBm (89.7429mW) IEEE 802.11g Mode: 19.52dBm (89.5365mW) IEEE 802.11n HT 20 MHz Mode: 19.48dBm (88.7156mW) IEEE 802.11n HT 40 MHz Mode: 19.49dBm (88.9201mW)
Modulation Technique	IEEE 802.11b Mode: DSSS IEEE 802.11g Mode: OFDM IEEE 802.11n HT 20 MHz Mode: OFDM IEEE 802.11n HT 40 MHz Mode: OFDM
Number of Channels	IEEE 802.11b/g Mode: 13 Channels IEEE 802.11n HT 20 MHz Mode: 13 Channels IEEE 802.11n HT 40 MHz Mode: 9 Channels
Antenna Specification	CHIP Antenna: 1.00 dBi Dipole Antenna:: 2.94 dBi
Temperature Range	-15°C ~ +55°C

Model Differences

Model Name	Difference	Tested (Check)
WideLink B600W	With Wi-Fi Function	☒
WideLink B600	Without Wi-Fi Function	☐

This report shall not be reproduced except in full, without the written approval of Compliance Certification Services.

I/O PORT

I/O PORT TYPES	Q'TY	TESTED WITH
1. USB Port	1	1
2. GPS Antenna Port	1	1
3. VHF Antenna Port	1	1
4. NMEA 0183 Port	2	2
5. NMEA 2000 Port	1	1
6. Micro SD Slot	1	1

Note: Client consigns only one model sample to test (Model Number is WideLink B600W).

4 TEST METHODOLOGY

4.1. DECISION OF FINAL TEST MODE

The EUT was tested together with the below additional components, and a configuration, which produced the worst emission levels, was selected and recorded in this report.

The test configuration modes are as the following:

Radiation Modes:

1	**12VDC MODE**
	12VDC MODE / 1-6GHz
2	**24VDC MODE**

Worst:

Conduction: N/A (The subject equipment is not intended to be connected to AC mains supply. Therefore, this test is not applicable)

Radiation: Mode 1

4.2. EUT SYSTEM OPERATION

1. All peripherals connect EUT to test.

This report shall not be reproduced except in full, without the written approval of Compliance Certification Services.

5 SETUP OF EQUIPMENT UNDER TEST

5.1. DESCRIPTION OF SUPPORT UNITS

The EUT has been tested as an independent unit together with other necessary accessories or support units. The following support units or accessories were used to form a representative test configuration during the tests.

Peripherals Devices:

No.	Equipment	Model No.	Serial No.	FCC ID / BSMI ID	Brand Name	Data Cable	Power Cord
1	VHF Antenna	ANT-11(TENTA-11) (AMEC P/N:AMEC-ANT-MFB-1200V)	N/A	N/A	AMEC	Shielded, 10m	N/A
2	USB Mouse	M-U0026	N/A	DOC BSMI: T41126	Logitech	Shielded, 1.8m	N/A
3	USB Keyboard	Y-U0011	1346SY01XWV8	DOC BSMI: T51160	Logitech	Shielded, 1.8m	N/A
4	GPS Antenna	ANT-21 (AGGRESSOR-21) (AGGRESSOR-111-C) (AMEC P/N:M-ANT-C1283-570001-A)	N/A	N/A	AMEC	Shielded, 10m	N/A
5	Host PC	DCSM	HBQHY1S	DOC BSMI: R33002	DELL	N/A	Unshielded, 1.8m
6	Monitor	P2314Ht	N/A	DOC BSMI: R33002	DELL	Shielded, 1.8m with two cores	Unshielded, 1.8m
7	Adaptor	YS-1015-U12	N/A	N/A	YHi	N/A	Unshielded, 1.8m
8	NMEA 0183 Cable	N/A	N/A	N/A	AMEC	Unshielded, 2.0m	N/A
9	NMEA 2000 Cable	N/A	N/A	N/A	AMEC	Unshielded, 0.9m	N/A
10	Micro SD Card	N/A	N/A	N/A	PQI	N/A	N/A
11	Mini USB to USB cable	N/A	N/A	N/A	AMEC	Shielded, 1.8m	N/A

Note:

1) All the equipment/cables were placed in the worst-case configuration to maximize the emission during the test.
2) Grounding was established in accordance with the manufacturer's requirements and conditions for the intended use.

This report shall not be reproduced except in full, without the written approval of Compliance Certification Services.

5.2. CONFIGURATION OF SYSTEM UNDER TEST

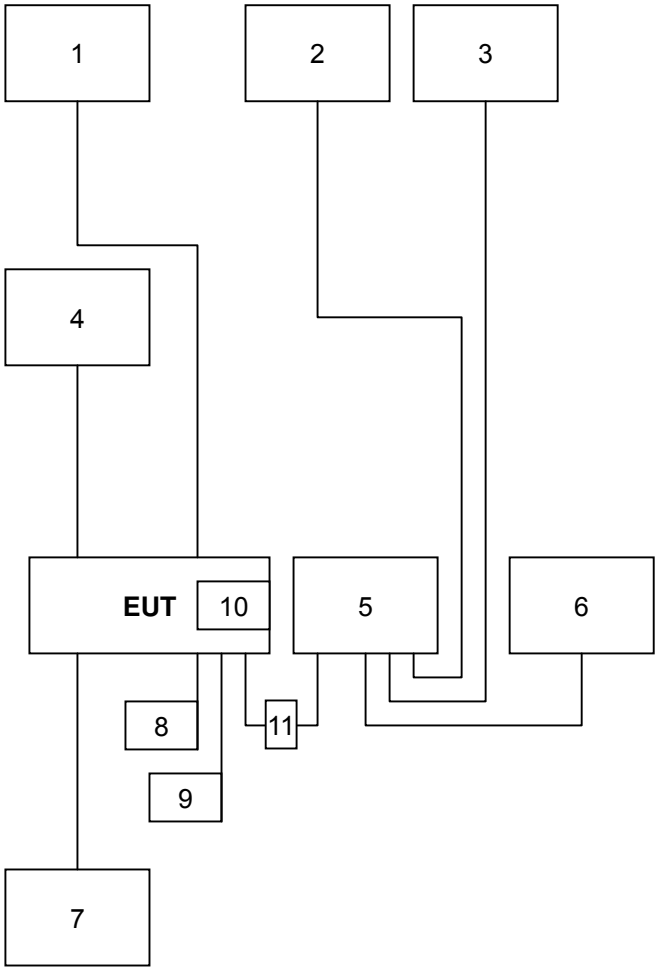

This report shall not be reproduced except in full, without the written approval of Compliance Certification Services.

6 FACILITIES AND ACCREDITATIONS

6.1. FACILITIES

All measurement facilities used to collect the measurement data are located at:

☒ No.163-1, Jhongsheng Rd., Xindian Dist., New Taipei City, 23151 Taiwan.

☐ No.81-1, Lane 210, Bade 2nd Rd., Lujhu Township, Taoyuan County 33841, TAIWAN, R.O.C.

☐ No.11, Wu-Gong 6th Rd., Wugu Industrial Park, New Taipei City 248, Taiwan (R.O.C.)

☐ No.139, Wugong Rd., Wugu Industrial Park, New Taipei City 248, Taiwan (R.O.C.)

The sites are constructed in conformance with the requirements of ANSI C63.4 and CISPR Publication 22. All receiving equipment conforms to CISPR 16-1-1, CISPR 16-1-2, CISPR 16-1-3, CISPR 16-1-4, CISPR 16-1-5.

6.2. ACCREDITATIONS

Our laboratories are accredited and approved by the following accreditation body according to ISO/IEC 17025.

Taiwan	TAF
USA	A2LA

The measuring facility of laboratories has been authorized or registered by the following approval agencies.

Canada	Industry Canada
Norway	Nemko
Japan	VCCI
Taiwan	BSMI
USA	FCC

Copies of granted accreditation certificates are available for downloading from our web site, http:///www.ccsrf.com

6.3. MEASUREMENT UNCERTAINTY

Where relevant, the following measurement uncertainty levels have been estimated for tests performed on the EUT as specified in CISPR 16-4-2:

Measurement	Frequency	Uncertainty
Conducted emissions	0.15MHz ~ 30MHz	N/A
Radiated emissions	30MHz ~ 1000MHz	± 4.12
	1000MHz ~ 6000MHz	± 4.74

This uncertainty represents an expanded uncertainty expressed at approximately the 95% confidence level using a coverage factor of k=2.

Consistent with industry standard (e.g. CISPR 22: 2005, clause 11, Measurement Uncertainty) determining compliance with the limits shall be base on the results of the compliance measurement. Consequently the measure emissions being less than the maximum allowed emission result in this be a compliant test or passing test.

The acceptable measurement uncertainty value without requiring revision of the compliance statement is base on conducted and radiated emissions being less than U_{CISPR} which is 3.6dB and 5.2dB respectively. CCS values (called U_{Lab} in CISPR 16-4-2) is less than U_{CISPR} as shown in the table above. Therefore, MU need not be considered for compliance.

This report shall not be reproduced except in full, without the written approval of Compliance Certification Services.

7 EMISSION TEST

7.1. CONDUCTED EMISSION MEASUREMENT

7.1.1. LIMITS

Table 5: Limits for conducted emissions

Frequency (MHz)	Quasi-peak	Average
0.15 - 0.5	66 - 56	56 - 46
0.50 - 5.0	56	46
5.0 - 30.0	60	50

Note: 1. The lower limit shall apply at the transition frequencies.
2. The limit decreases in line with the logarithm of the frequency in the range of 0.15 to 0.50 MHz.
3. All emanations from a class A/B digital device or system, including any network of conductors and apparatus connected thereto, shall not exceed the level of field strengths specified above.

Alternatively, for equipment intended to be used in telecommunication centres only, the limits given in table 6 may be used.

Table 6: Limits for conducted emissions of equipment intended to be used in telecommunication centres only

Frequency (MHz)	Quasi-peak	Average
0.15 - 0.5	79	66
0.50 – 30.0	73	60

7.1.2. TEST INSTRUMENTS

Conducted Emission room #				
Name of Equipment	**Manufacturer**	**Model**	**Serial Number**	**Calibration Due**

NOTE: 1. The calibration interval of the above test instruments is 12 months and the calibrations are traceable to NML/ROC and NIST/USA.
2. N.C.R = No Calibration Request.

This report shall not be reproduced except in full, without the written approval of Compliance Certification Services.

7.1.3. TEST PROCEDURES (please refer to measurement standard or CCS SOP PA-031)

Procedure of Preliminary Test

- The EUT and support equipment, if needed, were set up as per the test configuration to simulate typical usage per the user's manual. When the EUT is a tabletop system, a wooden table with a height of 0.8 meters is used and is placed on the ground plane as per EN 55022 (see Test Facility for the dimensions of the ground plane used). When the EUT is a floor standing equipment, it is placed on the ground plane, which has a 3-12 mm non-conductive covering to insulate the EUT from the ground plane.
- All I/O cables were positioned to simulate typical actual usage as per EN 55022.
- The EUT installed by AC main power, through a Line Impedance Stabilization Network (LISN), which was supplied power source and was grounded to the ground plane.
- All support equipment power by a second LISN.
- The test program of the EUT was started. Emissions were measured on each current carrying line of the EUT using an EMI Test Receiver connected to the LISN powering the EUT.
- The Receiver scanned from 150kHz to 30MHz for emissions in each of the test modes.
- During the above scans, the emissions were maximized by cable manipulation.
- The test mode(s) described in Item 3.1 were scanned during the preliminary test.
- After the preliminary scan, we found the test mode described in Item 3.1 producing the highest emission level.
- The worst configuration of EUT and cable of the above highest emission level were recorded for reference of the final test.

Procedure of Final Test

- EUT and support equipment were set up on the test bench as per the configuration with highest emission level in the preliminary test.
- A scan was taken on both power lines, Line 1 and Line 2, recording at least the six highest emissions. Emission frequency and amplitude were recorded into a computer in which correction factors were used to calculate the emission level and compare reading to the applicable limit.
- The test data of the worst-case condition(s) was recorded.

This report shall not be reproduced except in full, without the written approval of Compliance Certification Services.

7.1.4. TEST SETUP

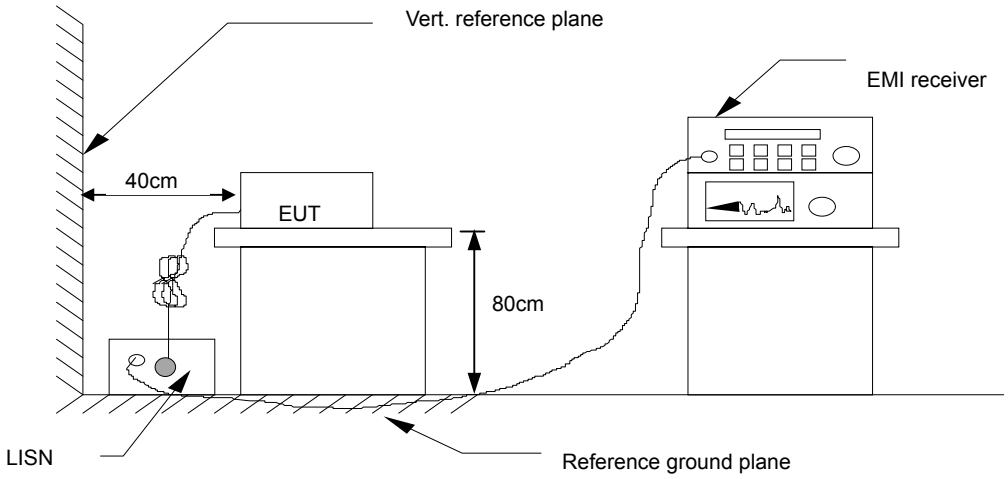

- For the actual test configuration, please refer to the related item – Photographs of the Test Configuration.

7.1.5. DATA SAMPLE

Freq. (MHz)	Reading (dBuV)	Factor (dB)	Result (dBuV)	Limit (dBuV)	Margin (dB)	Detector (P/Q/A)	Line (L1/L2)
x.xx	42.95	0.55	43.50	56	-12.50	Q	L1

Freq. = Emission frequency in MHz
Reading = Uncorrected Analyzer/Receiver reading
Factor = Insertion loss of LISN + Cable Loss + Pulse Limit
Result = Reading + Factor
Limit = Limit stated in standard
Margin = Reading in reference to limit
P = Peak Reading
Q = Quasi-peak Reading
A = Average Reading
L1 = Hot side
L2 = Neutral side

Calculation Formula

Margin (dB) = Result (dBuV) – Limit (dBuV)

This report shall not be reproduced except in full, without the written approval of Compliance Certification Services.

7.1.6. TEST RESULTS

Model No.	N/A	**6dB Bandwidth**	N/A
Environmental Conditions	N/A	**Test Mode**	N/A
Tested by	N/A		

Note: The subject equipment is not intended to be connected to AC mains supply. Therefore, this test is not applicable.

This report shall not be reproduced except in full, without the written approval of Compliance Certification Services.

7.2. CONDUCTED EMISSION MEASUREMENT AT TELECOMMUNICATION PORTS

7.2.1. LIMITS

The telecommunication ports shall meet the class B limits given in EN 55022 [1].

Frequency (MHz)	Voltage Limit (dBuV)		Current Limit (dBuA)	
	Quasi-peak	Average	Quasi-peak	Average
0.15 - 0.5	84 ~ 74	74 ~ 64	40 ~ 30	30 ~ 20
0.5 - 30.0	74	64	30	20

Note: The limits decrease linearly with the logarithm of the frequency in the range 0.15 MHz to 0.5 MHz.

Alternatively, for equipment intended to be used in telecommunication centres only, the class A limits given in EN 55022 [1] may be used.

Frequency (MHz)	Voltage Limit (dBuV)		Current Limit (dBuA)	
	Quasi-peak	Average	Quasi-peak	Average
0.15 ~ 0.5	97 ~ 87	84 ~ 74	53 ~ 43	40 ~ 30
0.5 ~ 30.0	87	74	43	30

Note: The limits decrease linearly with the logarithm of the frequency in the range 0.15 MHz to 0.5 MHz.

7.2.2. TEST INSTRUMENTS

Conducted Emission room #				
Name of Equipment	**Manufacturer**	**Model**	**Serial Number**	**Calibration Due**

NOTE: 1. The calibration interval of the above test instruments is 12 months and the calibrations are traceable to NML/ROC and NIST/USA.
2. N.C.R = No Calibration Request.

This report shall not be reproduced except in full, without the written approval of Compliance Certification Services.

7.2.3. TEST PROCEDURE (please refer to measurement standard or CCS SOP PA-031)

- Selecting ISN for unscreened cable or a current probe for screened cable to take measurement.
- The port of the EUT was connected to the remote side support equipment through the ISN/Current Probe and communication in normal condition.
- Making a overall range scan by using the test receiver controlled by controller and record at least six highest emissions for showing in the test report.
- Emission frequency and amplitude were recorded into a computer in which correction factors were used to calculate the emission level and compare reading to the applicable limit.
- In case of measuring on the screened cable, the current limit shall be applied; otherwise the voltage limit should be applied.
- The following test mode was scanned during the preliminary test:

  N/A

- After the preliminary scan, we found the following test mode(s) producing the highest emission level and test data of the worst case was recorded.

  N/A

This report shall not be reproduced except in full, without the written approval of Compliance Certification Services.

7.2.4. TEST SETUP

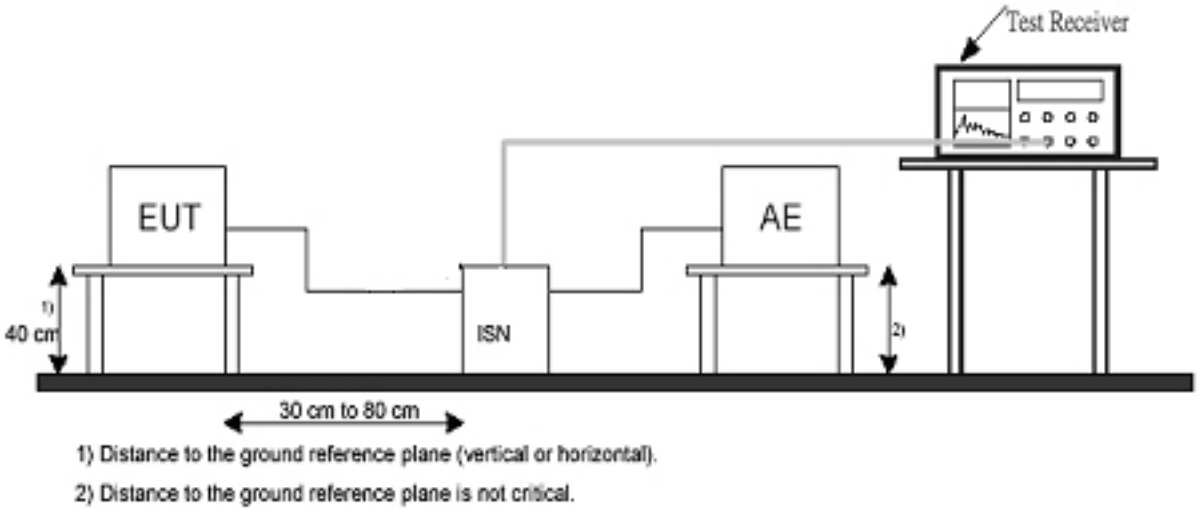

- For the actual test configuration, please refer to the related item – Photographs of the Test Configuration.

7.2.5. DATA SAMPLE

Freq. (MHz)	Reading (dBuV)	Factor (dB)	Result (dBuV)	Limit (dBuV)	Margin (dB)	Detector (P/Q/A)
x.xx	62.95	0.55	63.50	84	-20.50	Q

Freq. = Emission frequency in MHz
Reading = Uncorrected Analyzer/Receiver reading
Factor = Insertion loss of LISN + Cable Loss + Pulse Limit
Result = Reading + Factor
Limit = Limit stated in standard
Margin = Reading in reference to limit
P = Peak Reading
Q = Quasi-peak Reading
A = Average Reading

Calculation Formula

Margin (dB) = Result (dBuV) – Limit (dBuV)

7.2.6. TEST RESULTS

Model No.	N/A	**6dB Bandwidth**	N/A
Environmental Conditions	N/A	**Test Mode**	N/A
Tested by	N/A		

Note: No applicable, the EUT doesn't have LAN Port or Modem port.

This report shall not be reproduced except in full, without the written approval of Compliance Certification Services.

7.3. RADIATED EMISSION MEASUREMENT

7.3.1. LIMITS

FREQUENCY (MHz)	Limit (quasi-peak) dBuV/m	
	Class B	Class A
30 ~ 230	30	40
230 ~ 1000	37	47

Note: 1. The lower limit shall apply at the transition frequencies.
2. Alternatively, for ancillary equipment intended to be used in telecommunication centres only, the class A limits given in EN 55022 [1] may be used.

Table 3: Limits for radiated disturbance above 1 GHz at a measurement distance of 3 m

Frequency (GHz)	Average Limit dB(uV/m)	Peak Limit dB(uV/m)
1 ~ 3	50	70
3 ~ 6	54	74

Note: The lower limit applies at the transition frequency.

Alternatively, for ancillary equipment intended to be used in telecommunication centres only, the class A limits given in EN 55022 [1] and the limits above 1 GHz shown in table 4 apply.

Table 4: Limits above 1 GHz for radiated emissions from ancillary equipment intended for use in telecommunication centres only, and measured on a stand alone basis at a measurement distance of 3 m

Frequency (GHz)	Average Limit dB(uV/m)	Peak Limit dB(uV/m)
1 ~ 3	56	76
3 ~ 6	60	80

Note: The lower limit applies at the transition frequency.

This report shall not be reproduced except in full, without the written approval of Compliance Certification Services.

7.3.2. TEST INSTRUMENTS

Open Area Test Site # H				
Name of Equipment	**Manufacturer**	**Model**	**Serial Number**	**Calibration Due**
EMI Test Receiver	R&S	ESCI	101340	04/07/2016
Pre-Amplifier	HP	8447D	1937A01554	10/01/2016
CABLE	EMCI	CFD400-E	N-Type#H10	04/08/2016
Thermo-Hygro Meter	Wisewind	201A	No. 03	06/02/2016
Test S/W	EZ-EMC			
Above 1GHz Used				
Signal Analyzer (9k – 44GHz)	Agilent	N9010A	MY53440125	12/13/2016
Horn Antenna (1 – 18GHz)	EMCO	3117	00139062	10/21/2016
Pre-Amplifier (1 – 26.5GHz)	HP	8449B	3008A01266	12/13/2016
CABLE (1 – 18GHz)	Rosnol	A1K50-EW0630	151126-1	12/16/2016
THERMO-HYGRO METER	WISEWIND	201A	No. 02	05/10/2016
Test S/W	EZ-EMC			

NOTE: 1. The calibration interval of the above test instruments is 12 months and the calibrations are traceable to NML/ROC and NIST/USA.
2. N.C.R = No Calibration Request.

This report shall not be reproduced except in full, without the written approval of Compliance Certification Services.

7.3.3. TEST PROCEDURE (please refer to measurement standard or CCS SOP PA-031)

Procedure of Preliminary Test

- The equipment was set up as per the test configuration to simulate typical usage per the user's manual. When the EUT is a tabletop system, a wooden turntable with a height of 0.8 meters is used which is placed on the ground plane. When the EUT is a floor standing equipment, it is placed on the ground plane which has a 3-12 mm non-conductive covering to insulate the EUT from the ground plane.
- Support equipment, if needed, was placed as per EN 55022.
- All I/O cables were positioned to simulate typical usage as per EN 55022.
- The EUT received AC power source from the outlet socket under the turntable. All support equipment power received from another socket under the turntable.
- The antenna was placed at 3 or 10 meter away from the EUT as stated in EN 55022. The antenna connected to the Spectrum Analyzer via a cable and at times a pre-amplifier would be used.
- The Analyzer / Receiver quickly scanned from 30MHz to 6000MHz. The EUT test program was started. Emissions were scanned and measured rotating the EUT to 360 degrees and positioning the antenna 1 to 4 meters above the ground plane, in both the vertical and the horizontal polarization, to maximize the emission reading level.
- The test mode(s) described in Item 4.1 were scanned during the preliminary test:
- After the preliminary scan, we found the test mode described in Item 4.1 producing the highest emission level.
- The worst configuration of EUT and cable, antenna position, polarization and turntable position of the above highest emission levels were recorded for the final test.

Procedure of Final Test

- EUT and support equipment were set up on the turntable as per the configuration with highest emission level in the preliminary test.
- The Analyzer / Receiver scanned from 30MHz to 6000MHz. Emissions were scanned and measured rotating the EUT to 360 degrees, varying cable placement and positioning the antenna 1 to 4 meters above the ground plane, in both the vertical and the horizontal polarization, to maximize the emission reading level.
- Recorded at least the six highest emissions. Emission frequency, amplitude, antenna position, polarization and turntable position were recorded into a computer in which correction factors were used to calculate the emission level and compare reading to the applicable limit. Below 1GHz the Q.P. reading and above 1GHz the Peak and Average reading are presented.
- The test data of the worst-case condition(s) was recorded.

This report shall not be reproduced except in full, without the written approval of Compliance Certification Services.

7.3.4. TEST SETUP

Below 1GHz

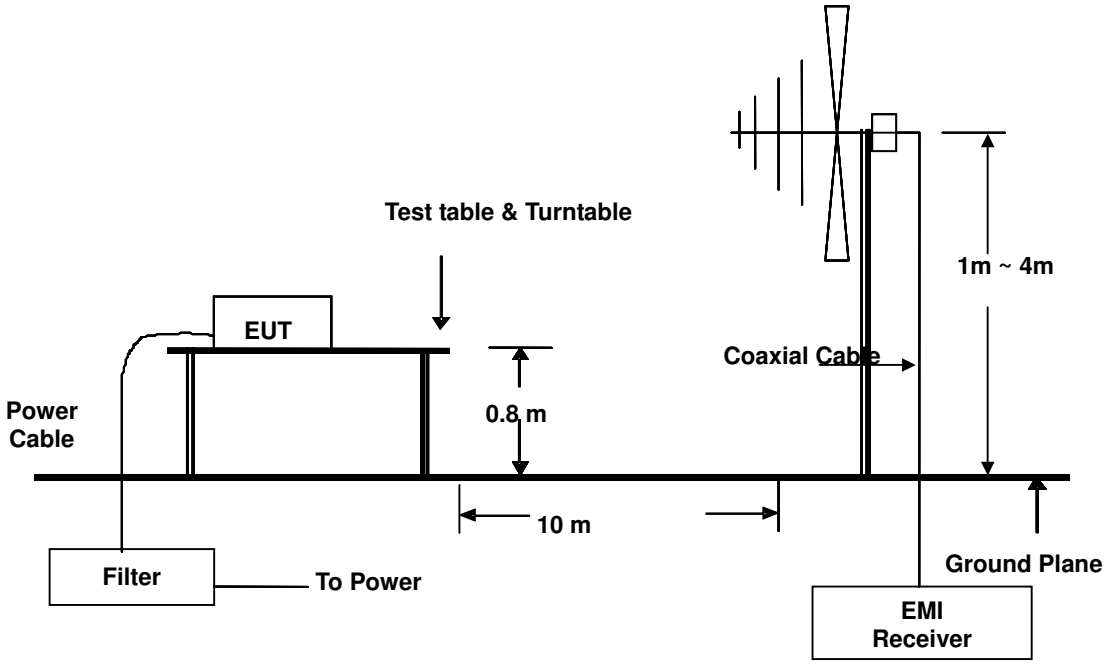

Above 1GHz

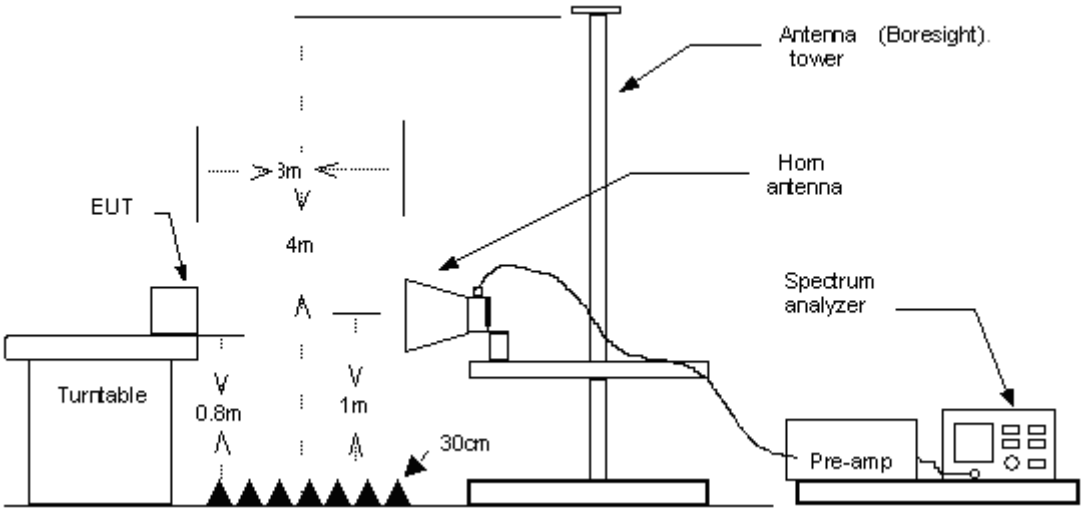

- For the actual test configuration, please refer to the related item – Photographs of the Test Configuration.

This report shall not be reproduced except in full, without the written approval of Compliance Certification Services.

7.3.5. DATA SAMPLE

Below 1GHz

Freq. (MHz)	Reading (dBuV)	Factor (dB/m)	Result (dBuV/m)	Limit (dBuV/m)	Margin (dB)	Detector (P/Q)	Pol. (H/V)
x.xx	14.0	12.2	26.2	30	-3.8	Q	H

Above 1GHz

Freq. (MHz)	Reading (dBuV)	Factor (dB/m)	Result (dBuV/m)	Limit (dBuV/m)	Margin (dB)	Detector (P/A)	Pol. (H/V)
x.xx	42.95	0.55	43.50	54	-10.50	A	H

Freq. = Emission frequency in MHz
Reading = Uncorrected Analyzer/Receiver reading
Factor = Antenna Factor + Cable Loss - Amplifier Gain
Result = Reading + Factor
Limit = Limit stated in standard
Margin = Reading in reference to limit
P = Peak Reading
Q = Quasi-peak Reading
A = Average Reading
H = Antenna Polarization: Horizontal
V = Antenna Polarization: Vertical

Calculation Formula

Margin (dB) = Result (dBuV/m) – Limit (dBuV/m)

This report shall not be reproduced except in full, without the written approval of Compliance Certification Services.

7.3.6. TEST RESULTS

Below 1GHz

Model No.	WideLink B600W	**Test Mode**	Mode 1
Environmental Conditions	24°C, 61% RH	**6dB Bandwidth**	120 kHz
Antenna Pole	Vertical	**Antenna Distance**	10m
Detector Function	Quasi-peak.	**Tested by**	Jim Lian
Standard	EN 55022 CLASS B		

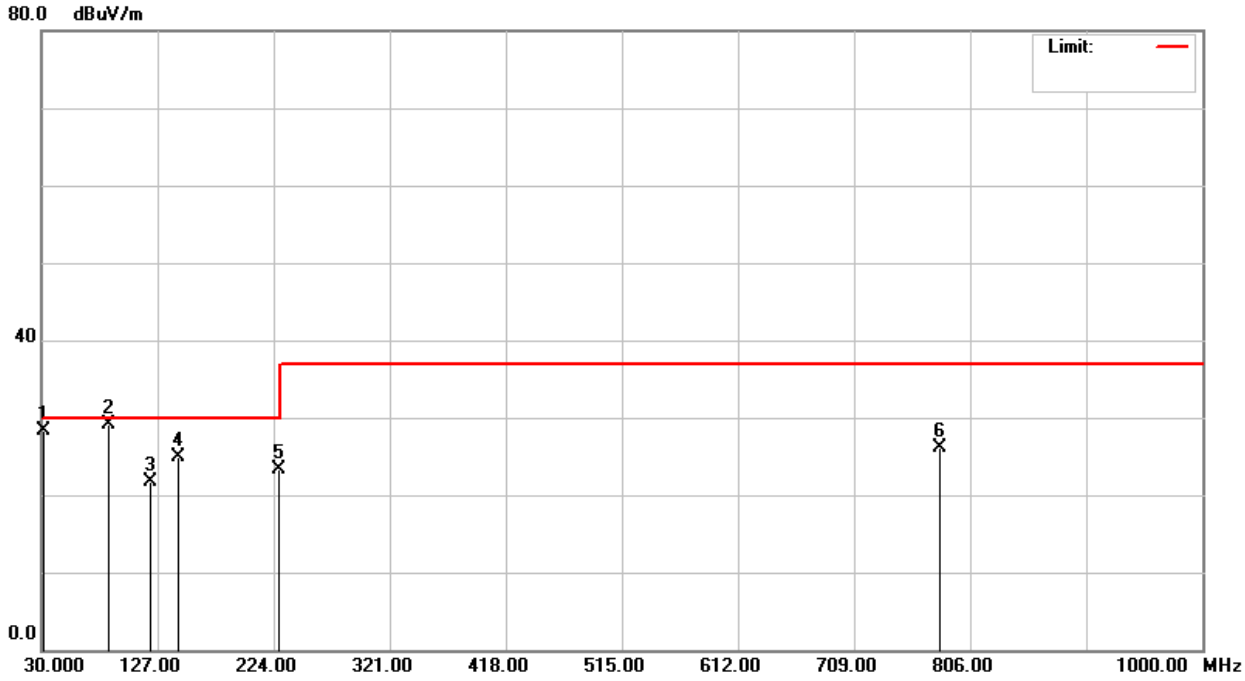

Radiated Emission Readings									
Frequency Range Investigated				**30 MHz to 1000 MHz at 10m**					
Freq. (MHz)	Reading (dBuV)	Factor (dB/m)	Result (dBuV/m)	Limit (dBuV/m)	Margin (dB)	Height (cm)	Degree (°)	Detector (P/Q)	Pol. (H/V)
32.5040	**38.00**	**-9.77**	**28.23**	**30.00**	**-1.77**	**100**	**190**	**Q**	**V**
86.7840	**47.00**	**-17.96**	**29.04**	**30.00**	**-0.96**	**100**	**334**	**Q**	**V**
121.6200	**36.00**	**-14.39**	**21.61**	**30.00**	**-8.39**	**100**	**47**	**Q**	**V**
143.9800	**39.60**	**-14.76**	**24.84**	**30.00**	**-5.16**	**100**	**88**	**Q**	**V**
228.5000	**38.70**	**-15.47**	**23.23**	**30.00**	**-6.77**	**100**	**225**	**Q**	**V**
780.5600	**30.20**	**-4.01**	**26.19**	**37.00**	**-10.81**	**400**	**123**	**Q**	**V**

Note: 1. P= Peak Reading; Q= Quasi-peak Reading.

This report shall not be reproduced except in full, without the written approval of Compliance Certification Services.

Model No.	WideLink B600W	**Test Mode**	Mode 1
Environmental Conditions	24°C, 61% RH	**6dB Bandwidth**	120 kHz
Antenna Pole	Horizontal	**Antenna Distance**	10m
Detector Function	Quasi-peak.	**Tested by**	Jim Lian
Standard	EN 55022 CLASS B		

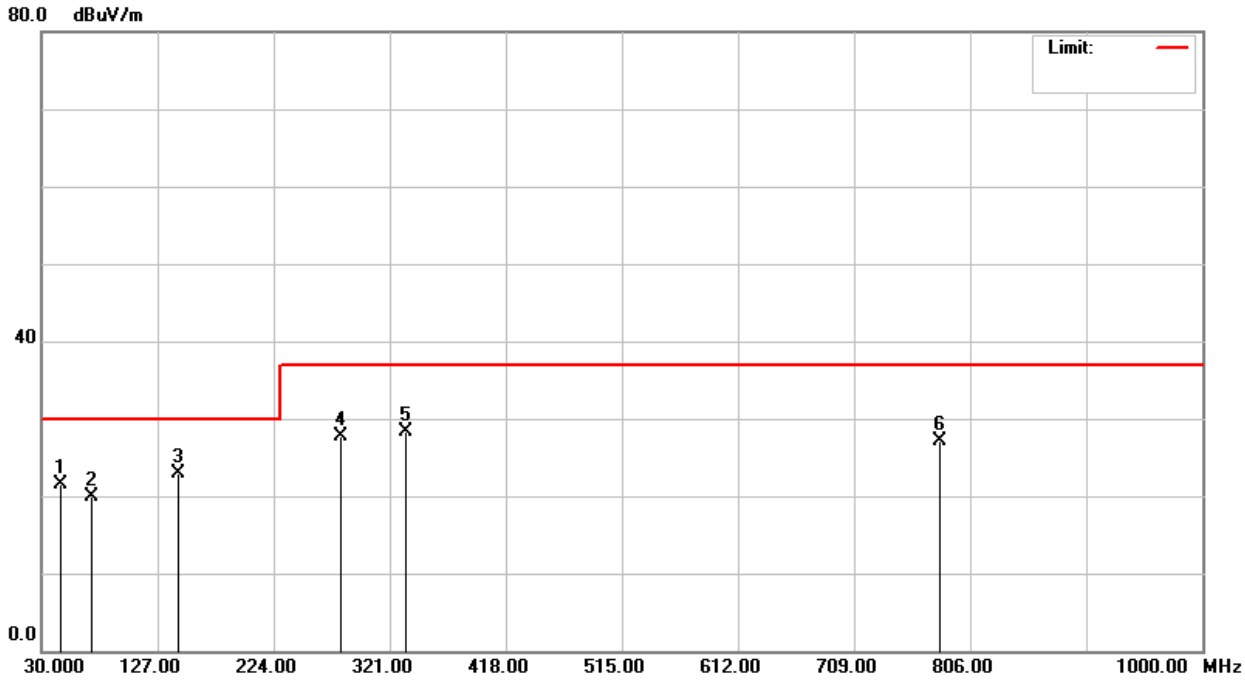

Radiated Emission Readings									
Frequency Range Investigated				**30 MHz to 1000 MHz at 10m**					
Freq. (MHz)	Reading (dBuV)	Factor (dB/m)	Result (dBuV/m)	Limit (dBuV/m)	Margin (dB)	Height (cm)	Degree (°)	Detector (P/Q)	Pol. (H/V)
45.6800	**38.30**	**-16.75**	**21.55**	**30.00**	**-8.45**	**400**	**168**	**Q**	**H**
71.7800	**39.60**	**-19.67**	**19.93**	**30.00**	**-10.07**	**400**	**330**	**Q**	**H**
143.8200	**37.60**	**-14.75**	**22.85**	**30.00**	**-7.15**	**400**	**274**	**Q**	**H**
280.3400	**40.30**	**-12.65**	**27.65**	**37.00**	**-9.35**	**400**	**95**	**Q**	**H**
334.6800	**39.60**	**-11.29**	**28.31**	**37.00**	**-8.69**	**400**	**188**	**Q**	**H**
780.2400	**31.20**	**-4.01**	**27.19**	**37.00**	**-9.81**	**100**	**111**	**Q**	**H**

Note: 1. P= Peak Reading; Q= Quasi-peak Reading.

This report shall not be reproduced except in full, without the written approval of Compliance Certification Services.

Above 1GHz

Model No.	WideLink B600W	**Test Mode**	Mode 1
Environmental Conditions	22°C, 64% RH	**6dB Bandwidth**	1 MHz
Antenna Pole	Vertical / Horizontal	**Antenna Distance**	3m
Highest frequency generated or used	2400MHz	**Upper frequency**	6000MHz
Detector Function	Peak and average.	**Tested by**	Kevin Wang
Standard	EN 55022 CLASS B		

Radiated Emission Readings							
Frequency Range Investigated				**Above 1GHz at 3m**			
Freq. (MHz)	Reading (dBuV)	Factor (dB/m)	Result (dBuV/m)	Limit (dBuV/m)	Margin (dB)	Detector (P/A)	Pol. (H/V)
2091.667	**49.11**	**-3.25**	**45.86**	**70.00**	**-24.14**	**P**	**V**
2408.333	**48.53**	**-2.80**	**45.73**	**70.00**	**-24.27**	**P**	**V**
2983.333	**47.77**	**-2.18**	**45.59**	**70.00**	**-24.41**	**P**	**V**
3825.000	**48.03**	**-1.09**	**46.94**	**74.00**	**-27.06**	**P**	**V**
4825.000	**48.29**	**-0.03**	**48.26**	**74.00**	**-25.74**	**P**	**V**
5075.000	**48.42**	**0.13**	**48.55**	**74.00**	**-25.45**	**P**	**V**

Radiated Emission Readings							
Frequency Range Investigated				**Above 1GHz at 3m**			
Freq. (MHz)	Reading (dBuV)	Factor (dB/m)	Result (dBuV/m)	Limit (dBuV/m)	Margin (dB)	Detector (P/A)	Pol. (H/V)
1841.667	**51.67**	**-4.81**	**46.86**	**70.00**	**-23.14**	**P**	**H**
2108.333	**49.36**	**-3.24**	**46.12**	**70.00**	**-23.88**	**P**	**H**
2408.333	**48.56**	**-2.80**	**45.76**	**70.00**	**-24.24**	**P**	**H**
2666.667	**47.56**	**-2.49**	**45.07**	**70.00**	**-24.93**	**P**	**H**
3700.000	**48.31**	**-1.28**	**47.03**	**74.00**	**-26.97**	**P**	**H**
4825.000	**51.03**	**-0.03**	**51.00**	**74.00**	**-23.00**	**P**	**H**

Note: P= Peak Reading; A= Average Reading.

This report shall not be reproduced except in full, without the written approval of Compliance Certification Services.

7.4. HARMONICS CURRENT MEASUREMENT

7.4.1. LIMITS OF HARMONICS CURRENT MEASUREMENT

Limits for Class A equipment	
Harmonics Order n	Max. permissible harmonics current A
Odd harmonics	
3	2.30
5	1.14
7	0.77
9	0.40
11	0.33
13	0.21
15<=n<=39	0.15x15/n
Even harmonics	
2	1.08
4	0.43
6	0.30
8<=n<=40	0.23x8/n

Limits for Class D equipment		
Harmonics Order n	Max. permissible harmonics current per watt mA/W	Max. permissible harmonics current A
Odd Harmonics only		
3	3.4	2.30
5	1.9	1.14
7	1.0	0.77
9	0.5	0.40
11	0.35	0.33
13	0.30	0.21
15<=n<=39	3.85/n	0.15x15/n

Note: 1. Class A and Class D are classified according to item 7.4.3.
2. According to section 7 of EN 61000-3-2, the above limits for all equipment except for lighting equipment having an active input power > 75 W and no limits apply for equipment with an active input power up to and including 75 W.

7.4.2. TEST INSTRUMENTS

Name of Equipment	Manufacturer	Model	Serial Number	Calibration Due

NOTE: The calibration interval of the above test instruments is 12 months and the calibrations are traceable to NML/ROC and NIST/USA.

This report shall not be reproduced except in full, without the written approval of Compliance Certification Services.

7.4.3. TEST PROCEDURE (please refer to measurement standard or CCS SOP PA-029)

- The EUT was placed on the top of a wooden table 0.8 meters above the ground and operated to produce the maximum harmonic components under normal operating conditions for each successive harmonic component in turn.
- The classification of EUT is according to section 5 of EN 61000-3-2.
- The EUT is classified as follows:

  Class A: Balanced three-phase equipment, Household appliances excluding equipment as Class D, Tools excluding portable tools, Dimmers for incandescent lamps, audio equipment, equipment not specified in one of the three other classes.

  Class B: Portable tools; Arc welding equipment which is not professional equipment.

  Class C: Lighting equipment.

  Class D: Equipment having a specified power less than or equal to 600 W of the following types: Personal computers and personal computer monitors; television receivers and refrigerators and freezers having one or more variable-speed drives to control compressor motor(s).

- The correspondent test program of test instrument to measure the current harmonics emanated from EUT is chosen. The measure time shall be not less than the time necessary for the EUT to be exercised.

7.4.4. TEST SETUP

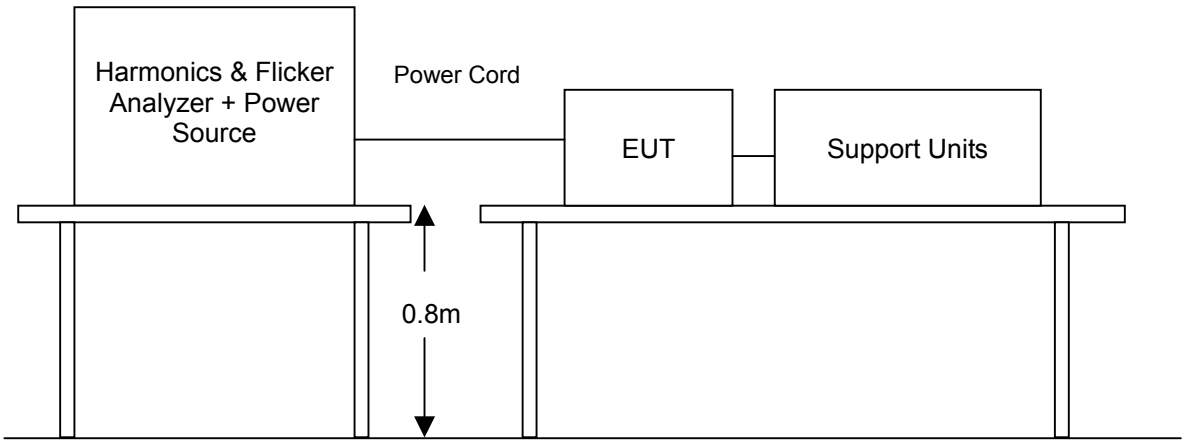

- For the actual test configuration, please refer to the related item – Photographs of the Test Configuration.

7.4.5. TEST RESULTS

Power Consumption	N/A	**Test Results**	N/A
Environmental Conditions	N/A	**Limits**	Class ☐ A ☐ B ☐ C ☐ D
Test Mode	N/A	**Tested by**	N/A

NOTE: The subject equipment is not intended to be connected to AC mains supply. Therefore, this test is not applicable.

This report shall not be reproduced except in full, without the written approval of Compliance Certification Services.

7.5. VOLTAGE FLUCTUATION AND FLICKS MEASUREMENT

7.5.1. LIMITS OF VOLTAGE FLUCTUATION AND FLICKS MEASUREMENT

Test Item	Limit	Remark
P_{st}	1.0	P_{st} means short-term flicker indicator.
P_{lt}	0.65	P_{lt} means long-term flicker indicator.
T_{dt} (ms)	500	T_{dt} means maximum time that dt exceeds 3.3 %.
d_{max} (%)	4%	d_{max} means maximum relative voltage change.
dc (%)	3.3%	dc means relative steady-state voltage change

7.5.2. TEST INSTRUMENTS

Name of Equipment	Manufacturer	Model	Serial Number	Calibration Due

NOTE: The calibration interval of the above test instruments is 12 months and the calibrations are traceable to NML/ROC and NIST/USA.

7.5.3. TEST PROCEDURE (please refer to measurement standard or CCS SOP PA-030)

- The EUT was placed on the top of a wooden table 0.8 meters above the ground and operated to produce the most unfavorable sequence of voltage changes under normal operating conditions.
- During the flick measurement, the measure time shall include that part of whole operation cycle in which the EUT produce the most unfavorable sequence of voltage changes. The observation period for short-term flicker indicator is 10 minutes and the observation period for long-term flicker indicator is 2 hours.

This report shall not be reproduced except in full, without the written approval of Compliance Certification Services.

7.5.4. TEST SETUP

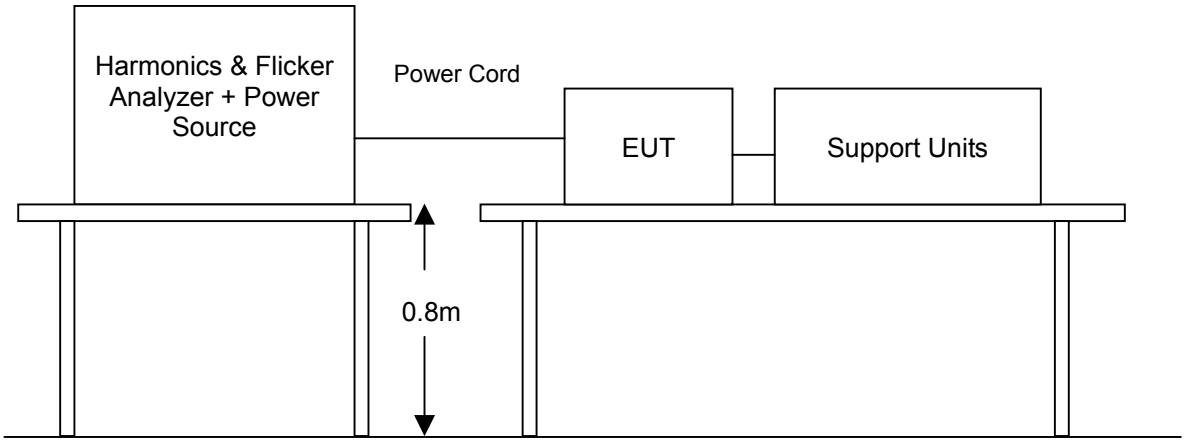

- For the actual test configuration, please refer to the related item – Photographs of the Test Configuration.

7.5.5. TEST RESULTS

Observation Period (Tp)	N/A	**Test Mode**	N/A
Environmental Conditions	N/A	**Tested by**	N/A

TEST PARAMETER	MEASUREMENT VALUE	LIMIT	REMARK
P_{st}	N/A	1.0	N/A
P_{lt}	N/A	0.65	N/A
T_{dt} (ms)	N/A	500	N/A
d_{max} (%)	N/A	4%	N/A
dc (%)	N/A	3.3%	N/A

Note: The subject equipment is not intended to be connected to AC mains supply. Therefore, this test is not applicable.

This report shall not be reproduced except in full, without the written approval of Compliance Certification Services.

8 IMMUNITY TEST

8.1. GENERAL DESCRIPTION

Product Standard	ETSI EN 301 489-1 V1.9.2 2011	
	Test Type	**Minimum Requirement**
Basic Standard, Specification, and Performance Criterion required	EN 61000-4-2	Electrostatic Discharge – ESD: 8kV air discharge, 4kV Contact discharge, Performance Criterion TT&TR
	EN 61000-4-3	Radio-Frequency Electromagnetic Field Susceptibility Test – RS: 80 ~1000 MHz and 1400 ~ 2700MHz, 3V/m, 80% AM(1kHz), Performance Criterion CT&CR
	EN 61000-4-4	Electrical Fast Transient/Burst - EFT, AC Power Port: 1kV, DC Power Port: 0.5kV Signal Ports and Telecommunication Ports: 0.5kV Performance Criterion TT&TR
	EN 61000-4-5	Surge Immunity Test: 1.2/50 μs Open Circuit Voltage, 8 /20 μs Short Circuit Current, AC Power Port ~ line to line: 1kV, line to earth (ground): 2kV DC Power Port ~ line to line and line to earth (ground): 0.5kV AC Signal Ports and Telecommunication Ports ~ line to ground: 1kV DC Signal Ports and Telecommunication Ports ~ line to ground: 0.5kV Performance Criterion TT&TR
	EN 61000-4-6	Conducted Radio Frequency Disturbances Test –CS: AC Power Port; DC Power Port; Signal Ports and Telecommunication Ports: 0.15 ~ 80 MHz, 3Vrms, 80% AM, 1kHz, Performance Criterion CT&CR
	EN 61000-4-11	Voltage Dips: 1) 0% residual 0.5 periods Performance TT or TR 2) 0% residual 1 periods Performance TT or TR 3) 70% residual 25 periods Performance TT or TR 4) 0% residual 250 periods Performance TT or TR

This report shall not be reproduced except in full, without the written approval of Compliance Certification Services.

8.2. GENERAL PERFORMANCE CRITERIA DESCRIPTION

General performance criteria

The performance criteria are:

- performance criteria A for immunity tests with phenomena of a continuous nature;
- performance criteria B for immunity tests with phenomena of a transient nature;
- performance criteria C for immunity tests with power interruptions exceeding a certain time.

The equipment shall meet the minimum performance criteria as specified in the following clauses.

Performance table

Table 1: Performance criteria

Criteria	During test	After test
A	Shall operate as intended. May show degradation of performance (see note 1). Shall be no loss of function. Shall be no unintentional transmissions.	Shall operate as intended. Shall be no degradation of performance (see note 2). Shall be no loss of function. Shall be no loss of stored data or user programmable functions.
B	May show loss of function (one or more). May show degradation of performance (see note 1). No unintentional transmissions.	Functions shall be self-recoverable. Shall operate as intended after recovering. Shall be no degradation of performance (see note 2). Shall be no loss of stored data or user programmable functions.
C	May be loss of function (one or more).	Functions shall be recoverable by the operator. Shall operate as intended after recovering. Shall be no degradation of performance (see note 2).

NOTE 1: Degradation of performance during the test is understood as a degradation to a level not below a minimum performance level specified by the manufacturer for the use of the apparatus as intended. In some cases the specified minimum performance level may be replaced by a permissible degradation of performance. If the minimum performance level or the permissible performance degradation is not specified by the manufacturer then either of these may be derived from the product description and documentation (including leaflets and advertising) and what the user may reasonably expect from the apparatus if used as intended. NOTE 2: No degradation of performance after the test is understood as no degradation below a minimum performance level specified by the manufacturer for the use of the apparatus as intended. In some cases the specified minimum performance level may be replaced by a permissible degradation of performance. After the test no change of actual operating data or user retrievable data is allowed. If the minimum performance level or the permissible performance degradation is not specified by the manufacturer then either of these may be derived from the product description and documentation (including leaflets and advertising) and what the user may reasonably expect from the apparatus if used as intended.

This report shall not be reproduced except in full, without the written approval of Compliance Certification Services.

Performance criteria for Continuous phenomena applied to Transmitters (CT)

The performance criteria A shall apply.

Tests shall be repeated with the EUT in standby mode (if applicable) to ensure that unintentional transmission does not occur. In systems using acknowledgement signals, it is recognized that an ACKnowledgement (ACK) or Not ACKnowledgement (NACK) transmission may occur, and steps should be taken to ensure that any transmission resulting from the application of the test is correctly interpreted.

Performance criteria for Transient phenomena applied to Transmitters (TT)

The performance criteria B shall apply, except for voltage dips of 100 ms and voltage interruptions of 5 000 ms duration, for which performance criteria C shall apply. Tests shall be repeated with the EUT in standby mode (if applicable) to ensure that unintentional transmission does not occur. In systems using acknowledgement signals, it is recognized that an acknowledgement (ACK) or not-acknowledgement.

(NACK) transmission may occur, and steps should be taken to ensure that any transmission resulting from the application of the test is correctly interpreted.

Performance criteria for Continuous phenomena applied to Receivers (CR)

The performance criteria A shall apply.

Where the EUT is a transceiver, under no circumstances, shall the transmitter operate unintentionally during the test. In systems using acknowledgement signals, it is recognized that an ACK or NACK transmission may occur, and steps should be taken to ensure that any transmission resulting from the application of the test is correctly interpreted.

Performance criteria for Transient phenomena applied to Receivers (TR)

The performance criteria B shall apply, except for voltage dips of 100 ms and voltage interruptions of 5 000 ms duration for which performance criteria C shall apply.

Where the EUT is a transceiver, under no circumstances, shall the transmitter operate unintentionally during the test. In systems using acknowledgement signals, it is recognized that an ACK or NACK transmission may occur, and steps should be taken to ensure that any transmission resulting from the application of the test is correctly interpreted.

This report shall not be reproduced except in full, without the written approval of Compliance Certification Services.

8.3. ELECTROSTATIC DISCHARGE (ESD)

8.3.1. TEST SPECIFICATION

Basic Standard:	EN 61000-4-2
Discharge Impedance:	330 ohm / 150 pF
Discharge Voltage:	Air Discharge: 2 ; 4 ; 8 kV (Direct) Contact Discharge: 2 ; 4kV (Direct/Indirect)
Polarity:	Positive & Negative
Number of Discharge:	Minimum 10 times at each test point
Discharge Mode:	Single Discharge 1 second minimum

8.3.2. TEST INSTRUMENT

IMMUNITY SHIELDED ROOM				
Name of Equipment	**Manufacturer**	**Model**	**Serial Number**	**Calibration Due**
ESD Generator	Teseq	NSG 437	249	12/13/2016
Aneroid Barometer	Sato	7610-20	89090	10/15/2016
Thermo-Hygrometer	TECPEL	DTM-303	080269	04/19/2016

Note: The calibration interval of the above test instruments is 12 months and the calibrations are traceable to NML/ROC and NIST/USA.

This report shall not be reproduced except in full, without the written approval of Compliance Certification Services.

8.3.3. TEST PROCEDURE (please refer to measurement standard or CCS SOP PA-022)

The discharges shall be applied in two ways:

a) Contact discharges to the conductive surfaces and coupling planes:
The EUT shall be exposed to at least 20 discharges, 10 each at negative and positive polarity, at a minimum of four test points. One of the test points shall be subjected to at least 50 indirect discharges to the center of the front edge of the **H**orizontal **C**oupling **P**lane (**HCP**). The remaining three test points shall each receive at least 10 direct contact discharges. If no direct contact test points are available, then at least 20 indirect discharges shall be applied in the indirect mode. Test shall be performed at a maximum repetition rate of one discharge per second.

b) Air discharges at slots and apertures and insulating surfaces:
On those parts of the EUT where it is not possible to perform contact discharge testing, the equipment should be investigated to identify user accessible points where breakdown may occur. Such points are tested using the air discharge method. This investigation should be restricted to those area normally handled by the user. A minimum of 10 single air discharges shall be applied to the selected test point for each such area.

The basic test procedure was in accordance with EN 61000-4-2:

a) The EUT was located 0.1 m minimum from all side of the **HCP** (dimensions 1.6m x 0.8m).
b) The support units were located another table 30 cm away from the EUT, but direct support unit was/were located at same location as EUT on the HCP and keep at a distance of 10 cm with EUT.
c) The time interval between two successive single discharges was at least 1 second.
d) Contact discharges were applied to the non-insulating coating, with the pointed tip of the generator penetrating the coating and contacting the conducting substrate.
e) Air discharges were applied with the round discharge tip of the discharge electrode approaching the EUT as fast as possible (without causing mechanical damage) to touch the EUT. After each discharge, the ESD generator was removed from the EUT and re-triggered for a new single discharge. The test was repeated until all discharges were complete.
f) At least ten single discharges (in the most sensitive polarity) were applied at the front edge of each **HCP** opposite the center point of each unit of the EUT and 0.1 meters from the front of the EUT. The long axis of the discharge electrode was in the plane of the **HCP** and perpendicular to its front edge during the discharge.
g) At least ten single discharges (in the most sensitive polarity) were applied to the center of one vertical edge of the **V**ertical **C**oupling **P**lane (**VCP**) in sufficiently different positions that the four faces of the EUT were completely illuminated. The **VCP** (dimensions 0.5m x 0.5m) was placed vertically to and 0.1 meters from the EUT.

This report shall not be reproduced except in full, without the written approval of Compliance Certification Services.

8.3.4. TEST SETUP

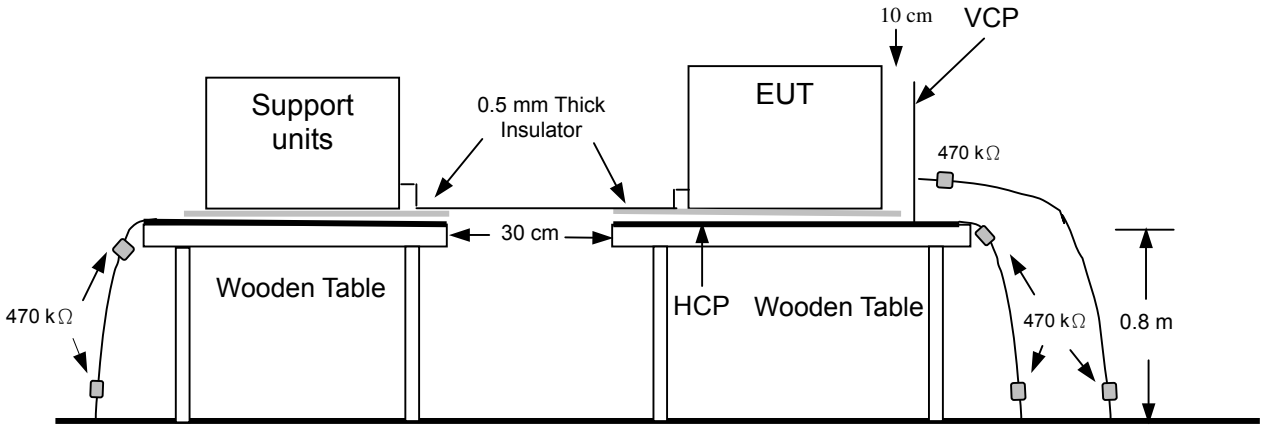

Ground Reference Plane

- For the actual test configuration, please refer to the related item – Photographs of the Test Configuration.

NOTE:

TABLE-TOP EQUIPMENT

The configuration consisted of a wooden table 0.8 meters high standing on the **G**round **R**eference **P**lane. The **GRP** consisted of a sheet of aluminum at least 0.25mm thick, and 2.5 meters square connected to the protective grounding system. A **H**orizontal **C**oupling **P**lane (1.6m x 0.8m) was placed on the table and attached to the **GRP** by means of a cable with 940k total impedance. The equipment under test, was installed in a representative system as described in section 7 of EN 61000-4-2, and its cables were placed on the **HCP** and isolated by an insulating support of 0.5mm thickness. A distance of 1-meter minimum was provided between the EUT and the walls of the laboratory and any other metallic structure.

FLOOR-STANDING EQUIPMENT

The equipment under test was installed in a representative system as described in section 7 of EN 61000-4-2, and its cables were isolated from the Ground Reference Plane by an insulating support of 0.1-meter thickness. The GRP consisted of a sheet of aluminum that is at least 0.25mm thick, and 2.5 meters square connected to the protective grounding system and extended at least 0.5 meters from the EUT on all sides.

This report shall not be reproduced except in full, without the written approval of Compliance Certification Services.

8.3.5. TEST RESULTS

Temperature	20°C	Humidity	43% RH
Pressure	1010mbar	Tested By	Bonny Tsai
Required Passing Performance		Criterion TT&TR	

Air Discharge							
Test Points	Test Levels			Results			
	± 2 KV	± 4 KV	± 8 KV	Pass	Fail	Performance Criterion	Observation
Front	☒	☒	☒	☒	☐	☒CT / ☒CR ☐TT / ☐TR	Note ☐1 ☒2
Back	☒	☒	☒	☒	☐	☒CT / ☒CR ☐TT / ☐TR	Note ☐1 ☒2
Left	☒	☒	☒	☒	☐	☒CT / ☒CR ☐TT / ☐TR	Note ☐1 ☒2
Right	☒	☒	☒	☒	☐	☒CT / ☒CR ☐TT / ☐TR	Note ☐1 ☒2
Top	☒	☒	☒	☒	☐	☒CT / ☒CR ☐TT / ☐TR	Note ☐1 ☒2

Contact Discharge							
Test Points	Test Levels			Results			
	± 2 kV	± 4 kV	± 8 kV	Pass	Fail	Performance Criterion	Observation
Front	☒	☒	☐	☒	☐	☒CT / ☒CR ☐TT / ☐TR	Note ☒1 ☐2
Back	☒	☒	☐	☒	☐	☒CT / ☒CR ☐TT / ☐TR	Note ☒1 ☐2

Discharge To Horizontal Coupling Plane							
Side of EUT	Test Levels			Results			
	± 2 KV	± 4 KV	± 8 KV	Pass	Fail	Performance Criterion	Observation
Front	☒	☒	☐	☒	☐	☒CT / ☒CR ☐TT / ☐TR	Note ☒1 ☐2
Back	☒	☒	☐	☒	☐	☒CT / ☒CR ☐TT / ☐TR	Note ☒1 ☐2
Left	☒	☒	☐	☒	☐	☒CT / ☒CR ☐TT / ☐TR	Note ☒1 ☐2
Right	☒	☒	☐	☒	☐	☒CT / ☒CR ☐TT / ☐TR	Note ☒1 ☐2

Discharge To Vertical Coupling Plane							
Side of EUT	Test Levels			Results			
	± 2 KV	± 4 KV	± 8 KV	Pass	Fail	Performance Criterion	Observation
Front	☒	☒	☐	☒	☐	☒CT / ☒CR ☐TT / ☐TR	Note ☒1 ☐2
Back	☒	☒	☐	☒	☐	☒CT / ☒CR ☐TT / ☐TR	Note ☒1 ☐2
Left	☒	☒	☐	☒	☐	☒CT / ☒CR ☐TT / ☐TR	Note ☒1 ☐2
Right	☒	☒	☐	☒	☐	☒CT / ☒CR ☐TT / ☐TR	Note ☒1 ☐2

Note: 1. There was no change compared with initial operation during the test.
2. No discharge point.

This report shall not be reproduced except in full, without the written approval of Compliance Certification Services.

The Photo for Discharge Points of EUT

Front

Back

Red Dot —Air Discharged
Blue Dot —Contact Discharged

This report shall not be reproduced except in full, without the written approval of Compliance Certification Services.

8.4. RADIATED, RADIO-FREQUENCY, ELECTROMAGNETIC FIELD (RS)

8.4.1. TEST SPECIFICATION

Basic Standard:	EN 61000-4-3
Frequency Range:	80 MHz ~1000 MHz, 1400 MHz ~ 2700 MHz
Field Strength:	3 V/m
Modulation:	1kHz Sine Wave, 80%, AM Modulation
Frequency Step:	1 % of preceding frequency value
Polarity of Antenna:	Horizontal and Vertical
Test Distance:	3 m
Antenna Height:	1.5m

8.4.2. TEST INSTRUMENT

RS Chamber				
Name of Equipment	**Manufacturer**	**Model**	**Serial Number**	**Calibration Due**
Calibration of Field	N/A	Chamber#RS	80-1000MHz	04/01/2016
Signal Generator	Agilent	N5181A	MY47421336	12/10/2016
Electric Field Probe	AR	FL7006	0338955	06/14/2016
RF Power Meter	Boonton	4242-01-02	14357	03/09/2017
Amplifier	AR	500W1000A	320994	No Calibration Required
Direction Coupler	AR	DC6180A	312189	No Calibration Required
Broadband Antenna	AR	AT1080	311819	No Calibration Required
Thermo-Hygro meter	TFA	N/A	NO.6	10/25/2016
Calibration of Field	N/A	Chamber#RS	1000-3000MHz	04/06/2016
Amplifier	AR	60S1G3	302728	No Calibration Required
Horn Antenna	EMCO	3115	5761	No Calibration Required
Direction Coupler	AR	DC7144A	306217	No Calibration Required
Software	Emcware Ver. 2.6.0.16			

Note: 1. The calibration interval of the above test instruments is 12 months and the calibrations are traceable to NML/ROC and NIST/USA.
2. N.C.R.= No Calibration required

This report shall not be reproduced except in full, without the written approval of Compliance Certification Services.

8.4.3. TEST PROCEDURE (please refer to measurement standard or CCS SOP PA-023)

The test procedure was in accordance with EN 61000-4-3

a) The testing was performed in a fully anechoic chamber. The transmit antenna was located at a distance of 3 meters from the EUT.

b) The frequency range is swept from 80 MHz to 1000 MHz / 1400 MHz to 2700 MHz, with the signal 80% amplitude modulated with a 1kHz sine-wave. The rate of sweep did not exceed 1.5 x 10^{-3} decade/s, where the frequency range is swept incrementally, the step size was 1% of preceding frequency value.

c) The dwell time at each frequency shall be not less than the time necessary for the EUT to be able to respond.

d) The field strength level was 3 V/m.

e) The test was performed with the EUT exposed to both vertically and horizontally polarized fields on each of the four sides.

8.4.4. TEST SETUP

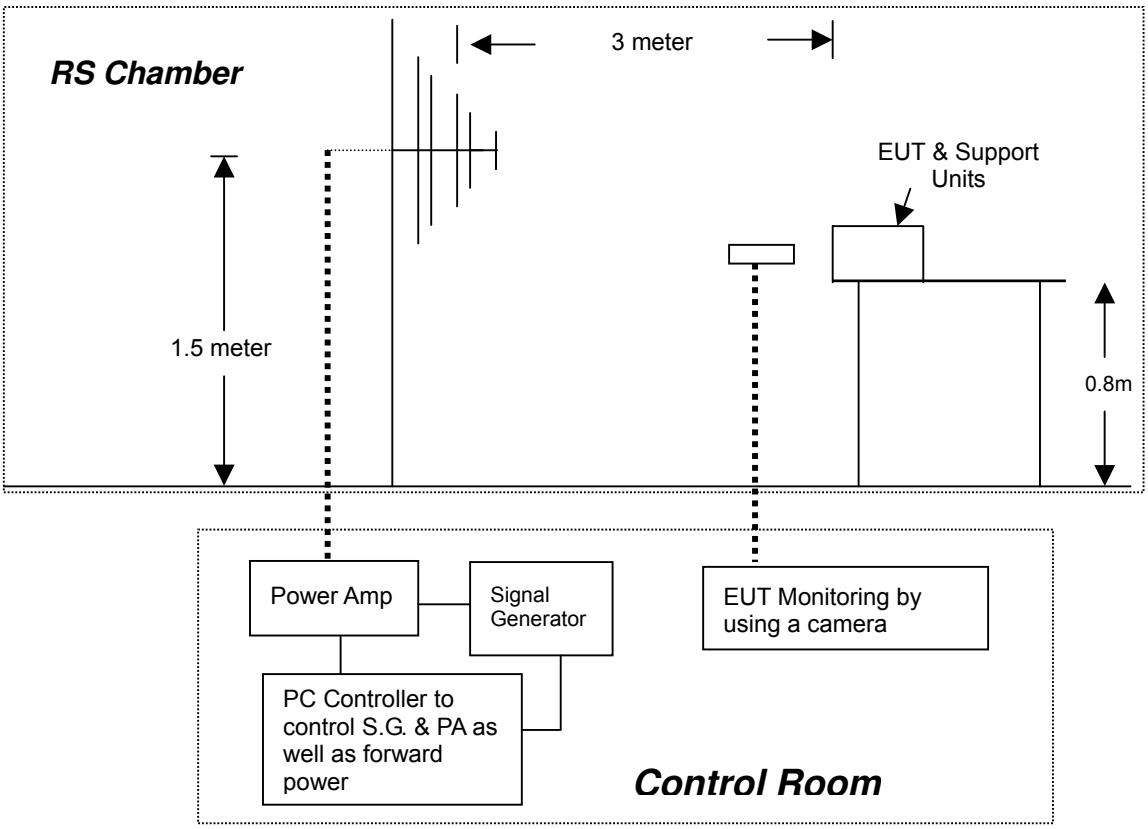

- For the actual test configuration, please refer to the related item – Photographs of the Test Configuration.

This report shall not be reproduced except in full, without the written approval of Compliance Certification Services.

NOTE:

TABLETOP EQUIPMENT

The EUT installed in a representative system as described in section 7 of EN 61000-4-3 was placed on a non-conductive table 0.8 meters in height. The system under test was connected to the power and signal wire according to relevant installation instructions.

FLOOR STANDING EQUIPMENT

The EUT installed in a representative system as described in section 7 of EN 61000-4-3 was placed on a non-conductive wood support 0.1 meters in height. The system under test was connected to the power and signal wire according to relevant installation instructions.

8.4.5. TEST RESULTS

Temperature	23°C	**Humidity**	60% RH
Pressure	1010mbar	**Dwell Time**	3 sec.
Tested By	Bonny Tsai	**Required Passing Performance**	Criterion CT&CR

Frequency (MHz)	Polarity	Azimuth	Field Strength (V/m)	Performance Criterion	Observation	Result
80 ~ 1000	V&H	0	3	☒CT ☒CR	Note ☒1 ☐2	PASS
80 ~ 1000	V&H	90	3	☒CT ☒CR	Note ☒1 ☐2	PASS
80 ~ 1000	V&H	180	3	☒CT ☒CR	Note ☒1 ☐2	PASS
80 ~ 1000	V&H	270	3	☒CT ☒CR	Note ☒1 ☐2	PASS
1400 ~ 2700	V&H	0	3	☒CT ☒CR	Note ☒1 ☐2	PASS
1400 ~ 2700	V&H	90	3	☒CT ☒CR	Note ☒1 ☐2	PASS
1400 ~ 2700	V&H	180	3	☒CT ☒CR	Note ☒1 ☐2	PASS
1400 ~ 2700	V&H	270	3	☒CT ☒CR	Note ☒1 ☐2	PASS

Note: There was no change compared with the initial operation during the test.

This report shall not be reproduced except in full, without the written approval of Compliance Certification Services.

8.5. ELECTRICAL FAST TRANSIENT (EFT)

8.5.1. TEST SPECIFICATION

Basic Standard:	EN 61000-4-4
Test Voltage:	DC Power Port: 0.5kV Signal Ports and Telecommunication Ports: 0.5kV
Polarity:	Positive & Negative
Impulse Frequency:	5 kHz
Impulse Wave-shape:	5/50 ns
Burst Duration:	15 ms
Burst Period:	300 ms
Test Duration:	Not less than 1 min.

8.5.2. TEST INSTRUMENT

Immunity Shield Room				
Name of Equipment	**Manufacturer**	**Model**	**Serial Number**	**Calibration Due**
EMC Immunity Tester	EMC Partner	TRANSIENT 2000	1117	03/10/2017
Capacitive Clamp	EMC-Partner	CN-EFT1000	589	07/21/2016
Software	Genecs Ver. 3.27			

Note: 1. The calibration interval of the above test instruments is 12 months and the calibrations are traceable to NML/ROC and NIST/USA.
2. N.C.R.= No Calibration required

8.5.3. TEST PROCEDURE (please refer to measurement standard or CCS SOP PA-024)

a) All types of cables, including their length, and the interface port of the EUT to which they were connected.

b) Both positive and negative polarity discharges were applied.

c) The length of the "hot wire" from the coaxial output of the EFT generator to the terminals on the EUT should not exceed 0.5 meter.

d) The duration time of each test sequential was 1 minute.

e) The transient/burst waveform was in accordance with EN 61000-4-4, 5/50ns.

This report shall not be reproduced except in full, without the written approval of Compliance Certification Services.

8.5.4. TEST SETUP

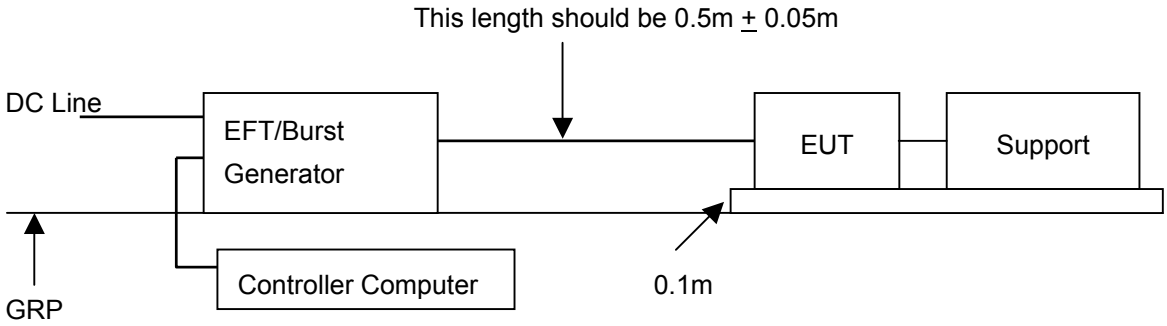

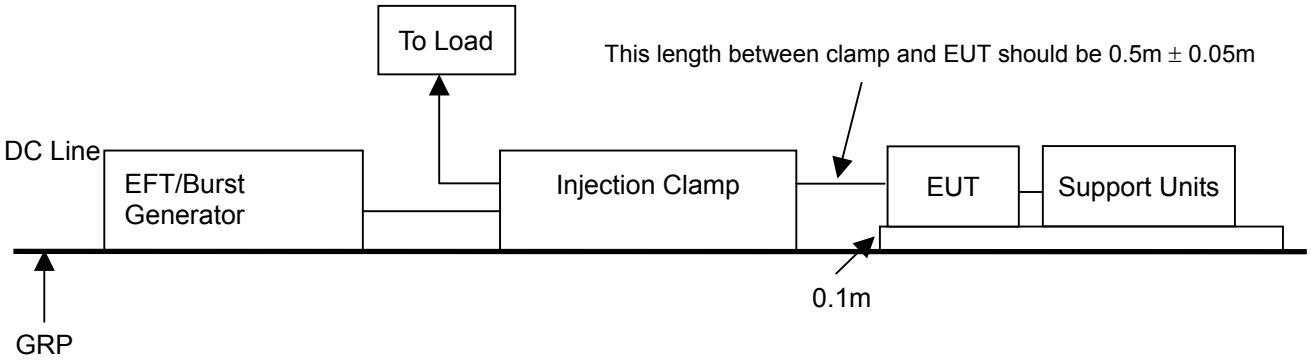

- For the actual test configuration, please refer to the related item – Photographs of the Test Configuration.

NOTE:

TABLETOP EQUIPMENT
The configuration consisted of a wooden table (0.8m high) standing on the Ground Reference Plane. The GRP consisted of a sheet of aluminum (at least 0.25mm thick and 2.5m square) connected to the protective grounding system. A minimum distance of 0.5m was provided between the EUT and the walls of the laboratory or any other metallic structure.

FLOOR STANDING EQUIPMENT
The EUT installed in a representative system as described in section 7 of EN 61000-4-4 and its cables, were isolated from the Ground Reference Plane by an insulating support that is 0.1-meter thick. The GRP consisted of a sheet of aluminum (at least 0.25mm thick and 2.5m square) connected to the protective grounding system.

This report shall not be reproduced except in full, without the written approval of Compliance Certification Services.

8.5.5. TEST RESULTS

Temperature	20°C	**Humidity**	50% RH
Pressure	1010mbar	**Tested By**	Bonny Tsai
Required Passing Performance		**Criterion TT&TR**	

Test Point	Polarity	Test Level (kV)	Performance Criterion	Observation	Result
L	+/-	0.5	☒ **CT** / ☒ **CR** ☐ **TT** / ☐ **TR**	**Note** ☒**1** ☐**2**	PASS
N	+/-	0.5	☒ **CT** / ☒ **CR** ☐ **TT** / ☐ **TR**	**Note** ☒**1** ☐**2**	PASS
L - N	+/-	0.5	☒ **CT** / ☒ **CR** ☐ **TT** / ☐ **TR**	**Note** ☒**1** ☐**2**	PASS
Antenna	+/-	0.5	☒ **CT** / ☒ **CR** ☐ **TT** / ☐ **TR**	**Note** ☒**1** ☐**2**	PASS

Note: 1. There was no change compared with initial operation during the test.

This report shall not be reproduced except in full, without the written approval of Compliance Certification Services.

8.6. SURGE IMMUNITY TEST

8.6.1. TEST SPECIFICATION

Basic Standard:	EN 61000-4-5
Wave-Shape:	Combination Wave 1.2/50 μs Open Circuit Voltage 8/20 μs Short Circuit Current
Test Voltage:	AC Power Port~ line to line: 1kV, line to ground: 2kV Signal Ports and Telecommunication Ports: 1kV
Surge Input/Output:	AC Power Line: L-N / L-PE / N-PE Signal Line: L-G
Generator Source Impedance:	2 ohm between networks 12 ohm between network and ground 42 ohm between network and ground
Polarity:	Positive/Negative
Phase Angle:	0° / 90° / 180° / 270°
Pulse Repetition Rate:	1 time / min. (maximum)
Number of Tests:	5 positive and 5 negative at selected points

8.6.2. TEST INSTRUMENT

Immunity Shield Room				
Name of Equipment	**Manufacturer**	**Model**	**Serial Number**	**Calibration Due**

Note: 1. The calibration interval of the above test instruments is 12 months and the calibrations are traceable to NML/ROC and NIST/USA.
2. N.C.R.= No Calibration required

This report shall not be reproduced except in full, without the written approval of Compliance Certification Services.

8.6.3. TEST PROCEDURE (please refer to measurement standard or CCS SOP PA-025)

a) For EUT power supply:
The surge is applied to the EUT power supply terminals via the capacitive coupling network. Decoupling networks are required in order to avoid possible adverse effects on equipment not under test that may be powered by the same lines, and to provide sufficient decoupling impedance to the surge wave. The power cord between the EUT and the coupling/decoupling networks was shorter than 2 meters in length.

b) For test applied to unshielded un-symmetrically operated interconnection lines of EUT:
The surge was applied to the lines via the capacitive coupling. The coupling / decoupling networks didn't influence the specified functional conditions of the EUT. The interconnection line between the EUT and the coupling/decoupling networks was shorter than 2 meters in length.

c) For test applied to unshielded symmetrically operated interconnection / telecommunication lines of EUT:
The surge was applied to the lines via gas arrestors coupling. Test levels below the ignition point of the coupling arrestor were not specified. The interconnection line between the EUT and the coupling/decoupling networks was shorter than 2 meters in length.

8.6.4. TEST SETUP

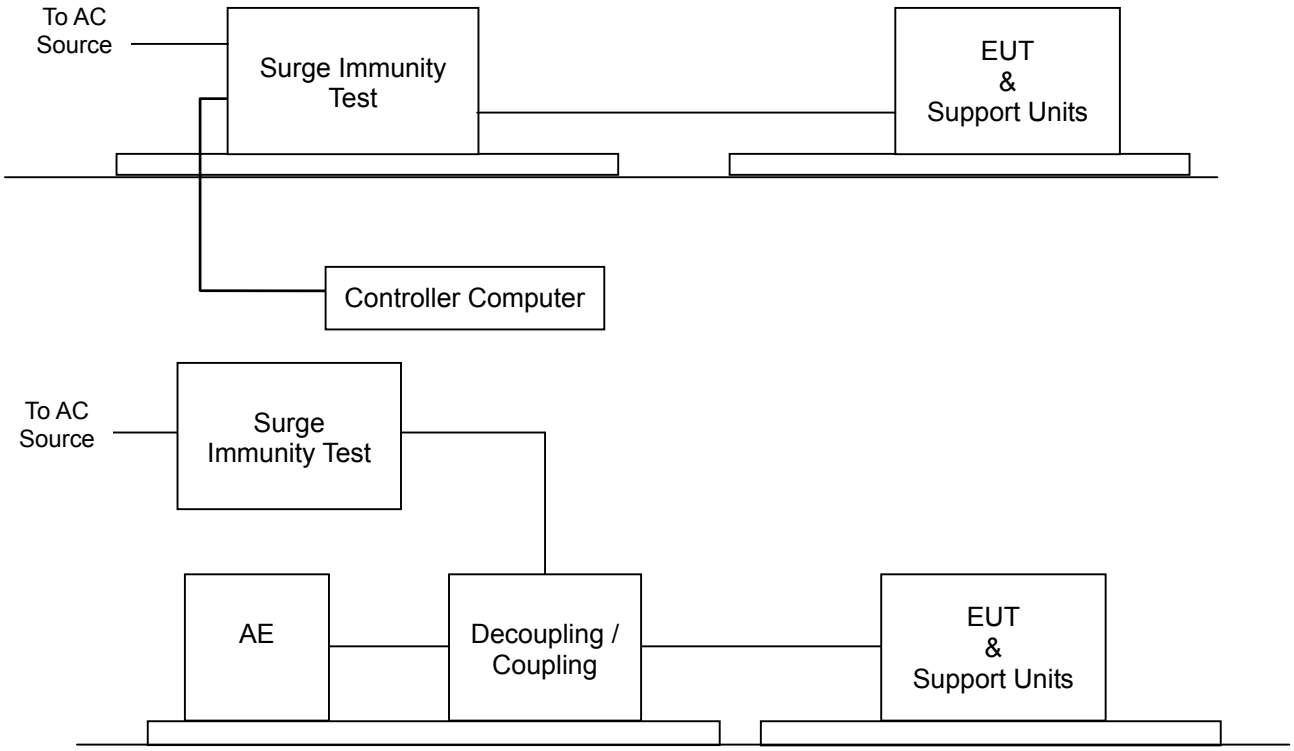

- For the actual test configuration, please refer to the related item – Photographs of the Test Configuration.

This report shall not be reproduced except in full, without the written approval of Compliance Certification Services.

8.6.5. TEST RESULTS

Temperature	N/A	**Humidity**	N/A
Pressure	N/A	**Tested By**	N/A
Required Passing Performance		**Criterion TT&TR**	

Test Point	Polarity	Test Level (kV)	Performance Criterion	Observation	Result
L - N	+/-	1	☐ CT / ☐ CR ☐ TT / ☐ TR	Note ☒1 ☐2	N/A
L - PE	+/-	2	☐ CT / ☐ CR ☐ TT / ☐ TR	Note ☒1 ☐2	N/A
N - PE	+/-	2	☐ CT / ☐ CR ☐ TT / ☐ TR	Note ☒1 ☐2	N/A
RJ45	+/-	1	☐ CT / ☐ CR ☐ TT / ☐ TR	Note ☒1 ☐2	N/A

NOTE: 1. The subject equipment is not intended to be connected to AC mains supply. Therefore, this test is not applicable.

This report shall not be reproduced except in full, without the written approval of Compliance Certification Services.

8.7. CONDUCTED RADIO FREQUENCY DISTURBANCES (CS)

8.7.1. TEST SPECIFICATION

Basic Standard:	EN 61000-4-6
Frequency Range:	0.15 MHz ~ 80 MHz
Field Strength:	3 Vrms
Modulation:	1kHz Sine Wave, 80%, AM Modulation
Frequency Step:	1 % of preceding frequency value
Coupled cable:	Power Mains, Unshielded Antenna Line, Unshielded
Coupling device:	☒ CDN-M2 (2 wires) ☐ CDN-M3 (3 wires) ☐ CDN-T2 for Line ☐ CDN-T4/T8 for RJ45 ☒ EM-Clamp

8.7.2. TEST INSTRUMENT

CS Room				
Name of Equipment	**Manufacturer**	**Model**	**Serial Number**	**Calibration Due**
CWS Generator	EM Test	CWS 500N1.4	P1446143188	02/21/2017
CDN (EUT)	Teseq	CDN M016	35820	06/15/2016
CDN	Teseq	CDN M016	35821	06/08/2016
EM Clamp	Schaffner	KEMZ 801	19227	02/22/2017
Attenuator	EMCI	SA3NL	10006F	No Calibration Required
Software	icd.control Ver. 5.1.9			

Note: 1. The calibration interval of the above test instruments is 12 months and the calibrations are traceable to NML/ROC and NIST/USA.
2. N.C.R.= No Calibration required

This report shall not be reproduced except in full, without the written approval of Compliance Certification Services.

8.7.3. TEST PROCEDURE (please refer to measurement standard or CCS SOP PA-026)

The EUT shall be tested within its intended operating and climatic conditions.

The test shell performed with the test generator connected to each of the coupling and decoupling devices in turn, while the other non-excited RF input ports of the coupling devices are terminated by a 50-ohm load resistor.

The frequency range was swept from 150 kHz to 80 MHz, using the signal level established during the setting process and with a disturbance signal of 80 % amplitude. The signal was modulated with a 1 kHz sine wave, pausing to adjust the RF signal level or the switch coupling devices as necessary. The sweep rate was 1.5 x 10^{-3} decades/s. Where the frequency range is swept incrementally, the step size was 1 % of preceding frequency value from 150 kHz to 80 MHz.

The dwell time at each frequency was less than the time necessary for the EUT to be exercised, and able to respond. Sensitive frequencies such as clock frequency(ies) and harmonics or frequencies of dominant interest, was analyzed separately.

Attempts was made to fully exercise the EUT during testing, and to fully interrogate all exercise modes selected for susceptibility.

8.7.4. TEST SETUP

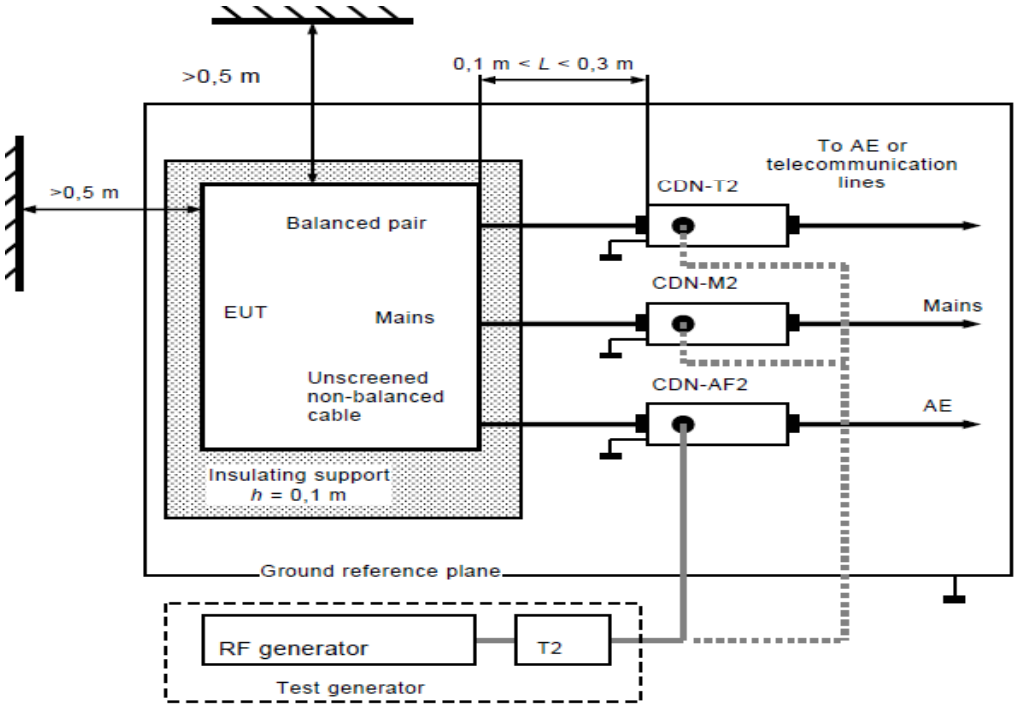

Note: 1. The CDNs and / or EM clamp used for real test depends on ports and cables configuration of EUT.
2. The EUT clearance from any metallic obstacles shall be at least 0.5m

- For the actual test configuration, please refer to the related item – Photographs of the Test Configuration.

NOTE:
TABLE-TOP AND FLOOR-STANDING EQUIPMENT
The equipment to be tested was placed on an insulating support of 0.1 meters height above a ground reference plane. All relevant cables shall be provided with the appropriate coupling and decoupling devices at a distance between 0.1 meters and 0.3 meters from the projected geometry of the EUT on the ground reference plane.

This report shall not be reproduced except in full, without the written approval of Compliance Certification Services.

8.7.5. TEST RESULTS

Temperature	21°C	**Humidity**	50% RH
Pressure	1009mbar	**Tested By**	Bonny Tsai
Required Passing Performance		**Criterion CT&CR**	

Frequency Band (MHz)	Field Strength (Vrms)	Cable	Injection Method	Performance Criterion	Observation	Result
0.15 ~ 80	3	DC Power Line (0.3m)	CDN-M2	☒CT ☒CR	Note ☒1 ☐2	PASS
0.15 ~ 80	3	Antenna Line (0.3m)	EM-Clamp	☒CT ☒CR	Note ☒1 ☐2	PASS

Note: 1. There was no change compared with initial operation during the test.

This report shall not be reproduced except in full, without the written approval of Compliance Certification Services.

8.8. VOLTAGE DIP & VOLTAGE INTERRUPTIONS

8.8.1. TEST SPECIFICATION

Basic Standard:	EN 61000-4-11
Test duration time:	Minimum three test events in sequence
Interval between event:	Minimum 10 seconds
Angle:	0~360 degree
Step:	45 degree

8.8.2. TEST INSTRUMENT

Immunity shielded room				
Name of Equipment	**Manufacturer**	**Model**	**Serial Number**	**Calibration Due**

Note: 1. The calibration interval of the above test instruments is 12 months and the calibrations are traceable to NML/ROC and NIST/USA.
2. N.C.R.= No Calibration required

8.8.3. TEST PROCEDURE (please refer to measurement standard or CCS SOP PA-028)

1. The EUT and support units were located on a wooden table, 0.8 m away from ground floor.
2. Setting the parameter of tests and then perform the test software of test simulator.
3. Conditions changes to occur at 0 degree crossover point of the voltage waveform.
4. Recording the test result in test record form.

8.8.4. TEST SETUP

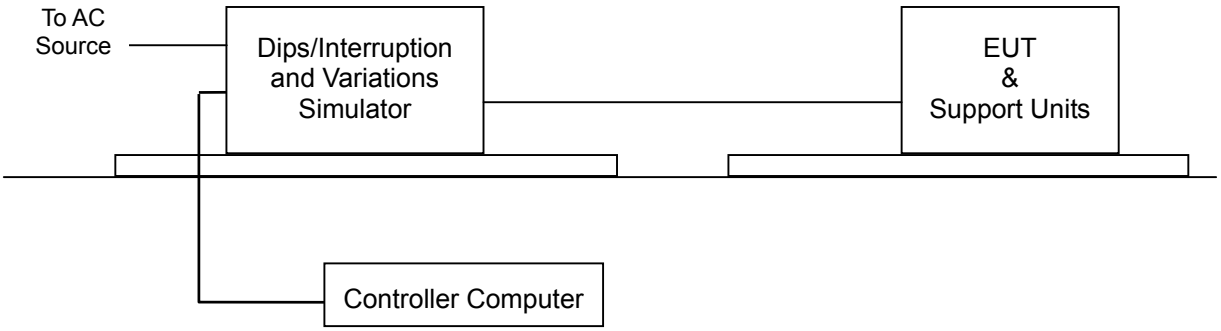

- For the actual test configuration, please refer to the related item – Photographs of the Test Configuration.

This report shall not be reproduced except in full, without the written approval of Compliance Certification Services.

8.8.5. TEST RESULTS

Temperature	N/A	**Humidity**	N/A
Pressure	N/A	**Tested By**	N/A
Required Passing Performance	**TT or TR: 0% residual 0.5 periods** **0% residual 1 periods** **70% residual 25 periods** **TT or TR: 0% residual 250 periods**		

Test Power: 230Vac, 50Hz				
Voltage (% Reduction)	**Duration (Period)**	**Performance Criterion**	**Observation**	**Test Result**
0	0.5	☐ **CT** / ☐ **CR** ☐ **TT** / ☐ **TR**	**Note** ☒**1** ☐**2**	N/A
0	1	☐ **CT** / ☐ **CR** ☐ **TT** / ☐ **TR**	**Note** ☒**1** ☐**2**	N/A
70	25	☐ **CT** / ☐ **CR** ☐ **TT** / ☐ **TR**	**Note** ☒**1** ☐**2**	N/A
0	250	☐ **CT** / ☐ **CR** ☐ **TT** / ☐ **TR**	**Note** ☒**1** ☐**2**	N/A

NOTE: 1. The subject equipment is not intended to be connected to AC mains supply. Therefore, this test is not applicable.

This report shall not be reproduced except in full, without the written approval of Compliance Certification Services.

9 PHOTOGRAPHS OF THE TEST CONFIGURATION

RADIATED EMISSION TEST

This report shall not be reproduced except in full, without the written approval of Compliance Certification Services.

ESD Test

RS Test

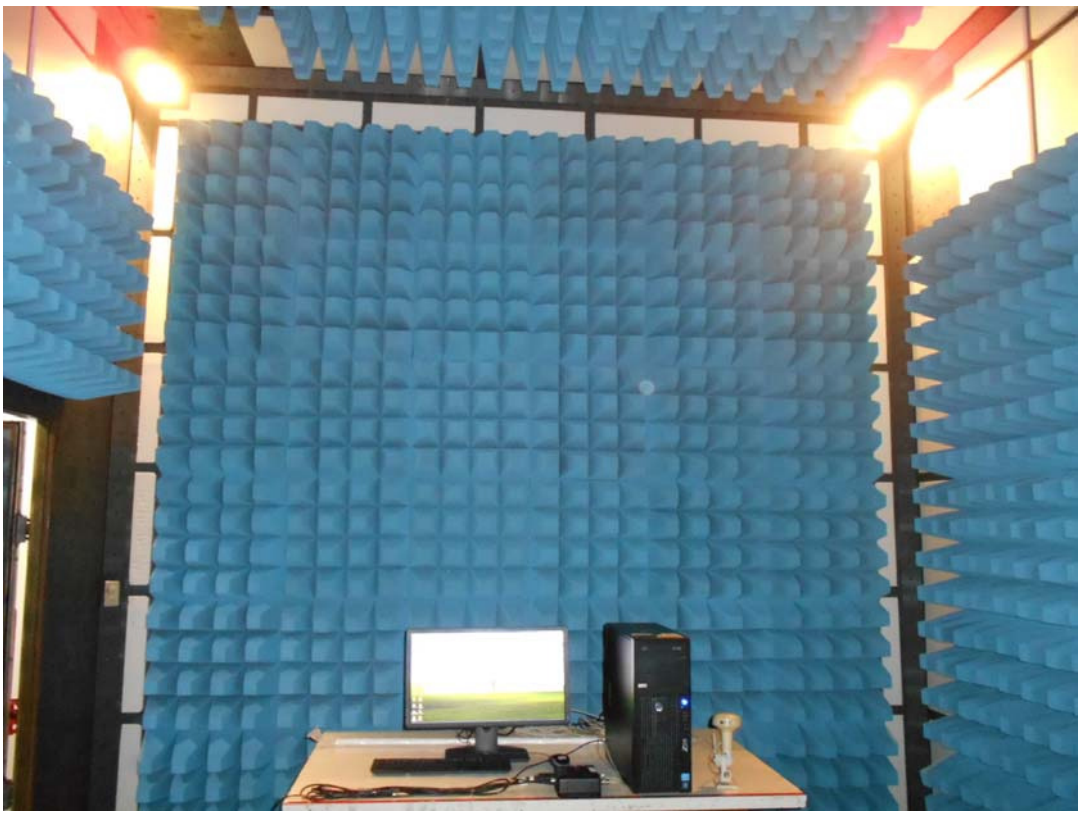

This report shall not be reproduced except in full, without the written approval of Compliance Certification Services.

EFT Test

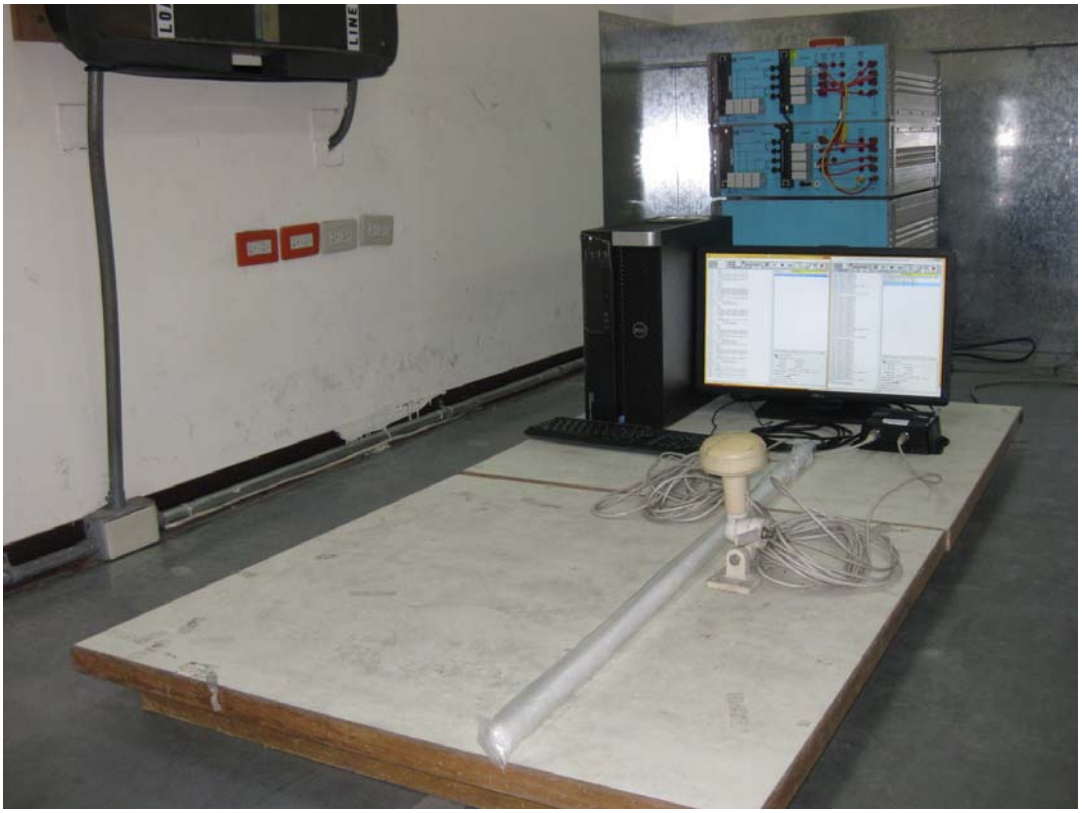

EFT For I/O Test

This report shall not be reproduced except in full, without the written approval of Compliance Certification Services.

CS Test

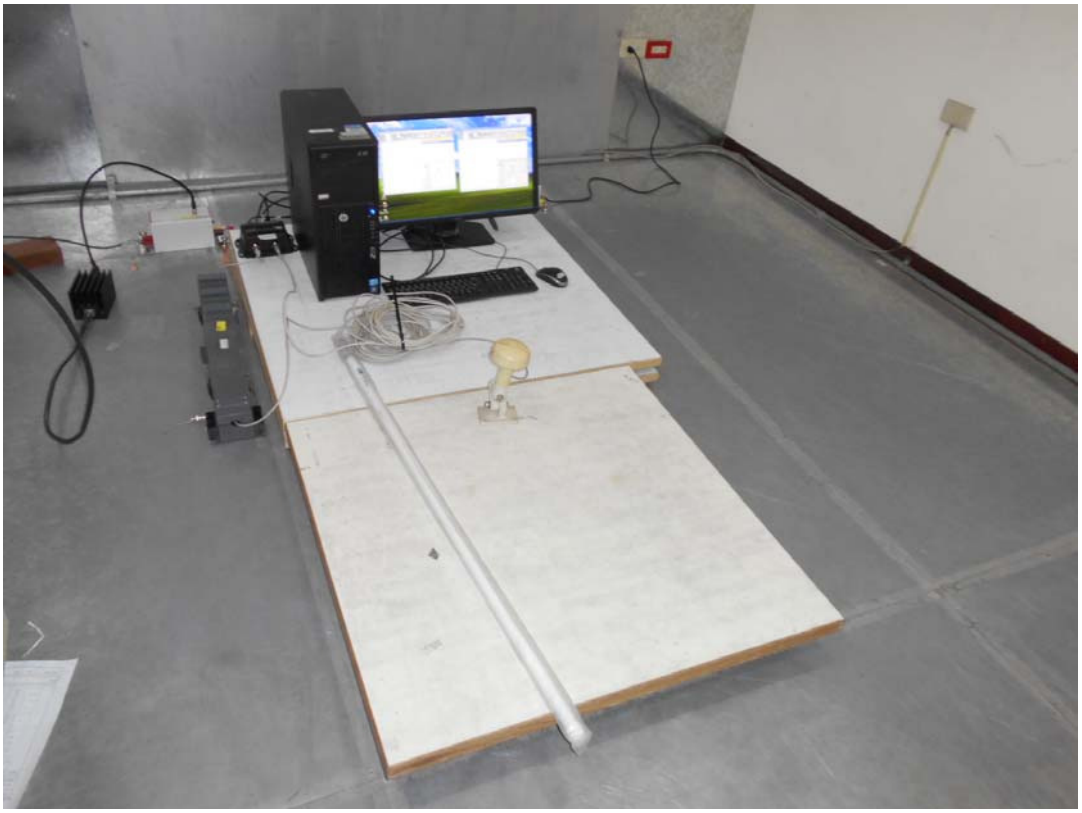

CS For I/O Test

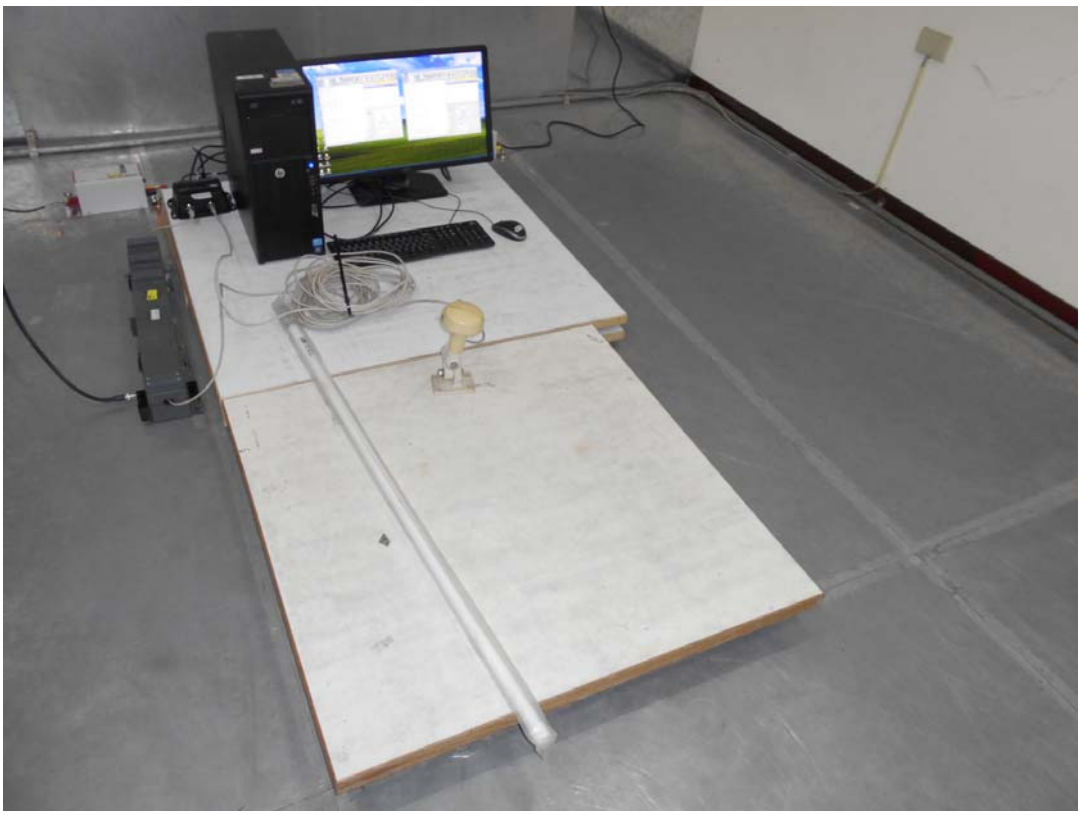

This report shall not be reproduced except in full, without the written approval of Compliance Certification Services.