TEST REPORT

for

AIS Class B Transponder

MODEL: WideLink B600W; WideLink B600

Test Report Number:
T160222W01-E

Issued to:

Alltek Marine Electronics Corp.

**14F-2, No.237, Sec. 1, Datong Rd., Xizhi District,
New Taipei City, Taiwan, R.O.C.**

Issued by:

Compliance Certification Services Inc.
Xindian Lab.
**No.163-1, Jhongsheng Rd., Xindian Dist.,
New Taipei City, 23151 Taiwan.**
TEL: 886-2-22170894
FAX: 886-2-22171029

Issued Date: January 18, 2017

Testing Laboratory
1108

Note: This report shall not be reproduced except in full, without the written approval of Compliance Certification Services Inc. This document may be altered or revised by Compliance Certification Services Inc. personnel only, and shall be noted in the revision section of the document. The client should not use it to claim product endorsement by TAF, A2LA, NVLAP, NIST or any government agencies. The test results in the report only apply to the tested sample.

Revision History

Rev.		Issue Date		Revisions	Effect Page	Revised By
00		January 18, 2017		Initial Issue	ALL	Andrea Chen

This report shall not be reproduced except in full, without the written approval of Compliance Certification Services.

TABLE OF CONTENTS

1 TEST CERTIFICATION 4
2 TEST RESULT SUMMARY 5
3 EUT DESCRIPTION 6
4 TEST METHODOLOGY 7
4.1. DECISION OF FINAL TEST MODE 7
4.2. EUT SYSTEM OPERATION 7
5 SETUP OF EQUIPMENT UNDER TEST 8
5.1. DESCRIPTION OF SUPPORT UNITS 8
5.2. CONFIGURATION OF SYSTEM UNDER TEST 9
6 FACILITIES AND ACCREDITATIONS 10
6.1. FACILITIES 10
6.2. ACCREDITATIONS 10
6.3. MEASUREMENT UNCERTAINTY 10
7 EMISSION TEST 11
7.1. CONDUCTED EMISSION MEASUREMENT 11
7.2. RADIATED EMISSION MEASUREMENT 18
8 IMMUNITY TEST 30
8.1. GENERAL DESCRIPTION 30
8.2. GENERAL PERFORMANCE CRITERIA DESCRIPTION 33
8.3. ELECTROSTATIC DISCHARGE (ESD) 34
8.4. RADIATED, RADIO-FREQUENCY, ELECTROMAGNETIC FIELD (RS) 39
8.5. ELECTRICAL FAST TRANSIENT (EFT) 42
8.6. SURGE IMMUNITY TEST 44
8.7. CONDUCTED RADIO FREQUENCY DISTURBANCES (CS) 46
8.8. POWER SUPPLY SHORT-TERM VARIATION TEST 49
8.9. POWER SUPPLY FAILURE TEST 51
9 PHOTOGRAPHS OF THE TEST CONFIGURATION 53
10 METHOD AND SCREENSHOTS OF EUT'S TRANSMITTING/RECEIVING PERFORMANCE CHECK 60
APPENDIX 1 - PHOTOGRAPHS OF EUT A1-1

This report shall not be reproduced except in full, without the written approval of Compliance Certification Services.

1 TEST CERTIFICATION

Product:	AIS Class B Transponder
Model:	WideLink B600W; WideLink B600
Brand:	AMEC
Applicant:	**Alltek Marine Electronics Corp.** 14F-2, No.237, Sec. 1, Datong Rd., Xizhi District, New Taipei City, Taiwan, R.O.C.
Manufacturer:	**Alltek Marine Electronics Corp.** 14F-2, No.237, Sec. 1, Datong Rd., Xizhi District, New Taipei City, Taiwan, R.O.C.
Tested:	February 25, 2016 ~ April 18, 2016
Applicable Standards:	**EN 60945: 2002 (For Clause 9, 10)** **IEC 60945: 2002 (For Clause 9, 10)** **IEC 60945 corrigendum 1: 2008** IEC 61000-4-2: 2008 IEC 61000-4-3: 2006 + A1: 2007 + A2: 2010 IEC 61000-4-4: 2012 IEC 61000-4-5: 2014 IEC 61000-4-6: 2013 Power supply short-term variation Power supply failure

Deviation from Applicable Standard
None

The above equipment was tested by Compliance Certification Services Inc. for compliance with the requirements of technical standards specified above under the EMC Directive 2014/30/EU. The results of testing in this report apply only to the product/system, which was tested. Other similar equipment will not necessarily produce the same results due to production tolerance and measurement uncertainties.

Approved by:

Sam Hu
Assistant Manager

Reviewed by:

Eva Fan
Supervisor of report document dept.

This report shall not be reproduced except in full, without the written approval of Compliance Certification Services.

2 TEST RESULT SUMMARY

EMISSION			
Standard	**Item**	**Result**	**Remarks**
EN 60945: 2002 (For Clause 9, 10) IEC 60945: 2002 (For Clause 9, 10) IEC 60945 corrigendum 1: 2008			
CISPR 16-1-1, CISPR 16-1-2	Conducted (Power Port)	PASS	Reference to EN 60945 clause 9.2 Table 5
CISPR 16-1-1, CISPR 16-1-4	Radiated	PASS	Reference to EN 60945 clause 9.3 Table 5

IMMUNITY			
Standard	**Item**	**Result**	**Remarks**
IEC 61000-4-2: 2008	ESD	PASS	Reference to EN 60945 clause 10.9
IEC 61000-4-3: 2006 + A1: 2007 + A2: 2010	RS	PASS	Reference to EN 60945 clause 10.4
IEC 61000-4-4: 2012	EFT	PASS	Reference to EN 60945 clause 10.5
IEC 61000-4-5: 2014	Surge	N/A	Please see the page 45
IEC 61000-4-6: 2013	CS	PASS	Reference to EN 60945 clause 10.3
POWER SUPPLY SHORT-TERM VARIATION		N/A	Please see the page 50
POWER SUPPLY FAILURE TEST		PASS	Reference to EN 60945 clause 10.8

This report shall not be reproduced except in full, without the written approval of Compliance Certification Services.

3 EUT DESCRIPTION

Product	AIS Class B Transponder
Brand Name	AMEC
Model	WideLink B600W; WideLink B600
Applicant	Alltek Marine Electronics Corp.
Housing material	Plastic
Identify Number	T160222W01
Received Date	February 22, 2016
EUT Power Rating	12VDC/24VDC from DC power supply
Hardware	M-PCB-B601MBV2
Software	V1.1.5

Model Differences

Model Name	Difference	Tested (Check)
WideLink B600W	With Wi-Fi Function	☒
WideLink B600	Without Wi-Fi Function	☐

I/O PORT

I/O PORT TYPES	Q'TY	TESTED WITH
1. USB Port	1	1
2. GPS Antenna Port	1	1
3. VHF Antenna Port	1	1
4. NMEA 0183 Port	2	2
5. NMEA 2000 Port	1	1
6. Micro SD Slot	1	1

Note: Client consigns only one sample to test (Model Number: WideLink B600W).

This report shall not be reproduced except in full, without the written approval of Compliance Certification Services.

4 TEST METHODOLOGY

4.1. DECISION OF FINAL TEST MODE

The EUT was tested together with the below additional components, and a configuration, which produced the worst emission levels, was selected and recorded in this report.

The test configuration/ modes are as the following:

Conduction Modes:

1	**12VDC MODE**
2	**24VDC MODE**

Radiation Modes:

1	**12VDC MODE**
2	**24VDC MODE**

Worst:

Conduction: Mode 1

Radiation: Mode 1

4.2. EUT SYSTEM OPERATION

1. All peripherals connect EUT to test.

This report shall not be reproduced except in full, without the written approval of Compliance Certification Services.

5 SETUP OF EQUIPMENT UNDER TEST

5.1. DESCRIPTION OF SUPPORT UNITS

The EUT has been tested as an independent unit together with other necessary accessories or support units. The following support units or accessories were used to form a representative test configuration during the tests.

Peripherals Devices:

No.	Equipment	Model No.	Serial No.	FCC ID / BSMI ID	Brand Name	Data Cable	Power Cord
1	VHF Antenna	ANT-11(TENTA-11) (AMEC P/N:AMEC-ANT-MFB-1200V)	N/A	N/A	AMEC	Shielded, 10m	N/A
2	USB Mouse	M-U0026	N/A	DOC BSMI: T41126	Logitech	Shielded, 1.8m	N/A
3	USB Keyboard	Y-U0011	1346SY01XWV8	DOC BSMI: T51160	Logitech	Shielded, 1.8m	N/A
4	GPS Antenna	ANT-21 (AGGRESSOR-21) (AGGRESSOR-111-C) (AMEC P/N:M-ANT-C1283-570001-A)	N/A	N/A	AMEC	Shielded, 10m	N/A
5	Host PC	DCSM	HBQHY1S	DOC BSMI: R33002	DELL	N/A	Unshielded, 1.8m
6	Monitor	P2314Ht	N/A	DOC BSMI: R33002	DELL	Shielded, 1.8m with two cores	Unshielded, 1.8m
7	Adaptor	YS-1015-U12	N/A	N/A	YHi	N/A	Unshielded, 1.8m
8	NMEA 0183 Cable	N/A	N/A	N/A	AMEC	Unshielded, 2.0m	N/A
9	NMEA 2000 Cable	N/A	N/A	N/A	AMEC	Unshielded, 0.9m	N/A
10	Micro SD Card	N/A	N/A	N/A	PQI	N/A	N/A
11	Mini USB to USB cable	N/A	N/A	N/A	AMEC	Shielded, 1.8m	N/A

Note:
1) All the equipment/cables were placed in the worst-case configuration to maximize the emission during the test.
2) Grounding was established in accordance with the manufacturer's requirements and conditions for the intended use.

This report shall not be reproduced except in full, without the written approval of Compliance Certification Services.

5.2. CONFIGURATION OF SYSTEM UNDER TEST

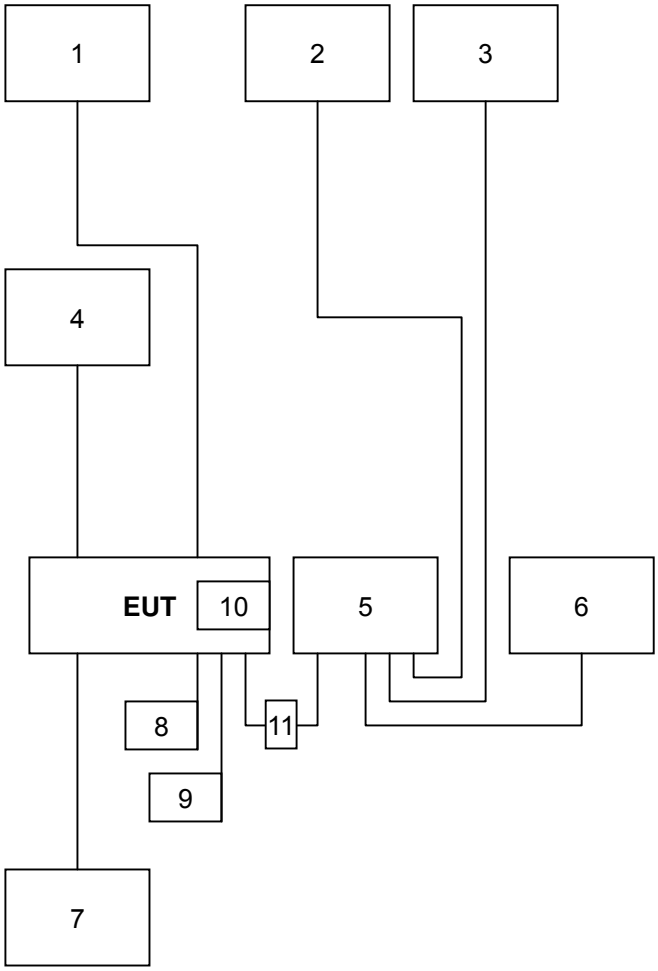

This report shall not be reproduced except in full, without the written approval of Compliance Certification Services.

6 FACILITIES AND ACCREDITATIONS

6.1. FACILITIES

All measurement facilities used to collect the measurement data are located at CCSrf Taiwan Xindian Lab. at No.163-1, Jhongsheng Rd., Xindian Dist., New Taipei City, 23151 Taiwan.

The sites are constructed in conformance with the requirements of ANSI C63.4 and CISPR Publication 22. All receiving equipment conforms to CISPR 16-1-1, CISPR 16-1-2, CISPR 16-1-3, CISPR 16-1-4 and CISPR 16-1-5.

6.2. ACCREDITATIONS

Our laboratories are accredited and approved by the following accreditation body according to ISO/IEC 17025.

Taiwan	TAF
USA	A2LA

The measuring facility of laboratories has been authorized or registered by the following approval agencies.

Canada	Industry Canada
Norway	Nemko
Japan	VCCI
Taiwan	BSMI
USA	FCC

Copies of granted accreditation certificates are available for downloading from our web site, http://www.ccsrf.com

6.3. MEASUREMENT UNCERTAINTY

Where relevant, the following measurement uncertainty levels have been estimated for tests performed on the EUT as specified in CISPR 16-4-2:

Measurement	Frequency	Uncertainty
Conducted emissions (Power port)	0.01MHz ~ 30MHz	± 1.59
Radiated emissions	0.15MHz ~ 30MHz	± 1.60
	30MHz ~ 1000MHz	± 4.01
	1000MHz ~ 2000MHz	± 4.74

This uncertainty represents an expanded uncertainty expressed at approximately the 95% confidence level using a coverage factor of k=2.

Consistent with industry standard (e.g. CISPR 22: 2005, clause 11, Measurement Uncertainty) determining compliance with the limits shall be base on the results of the compliance measurement. Consequently the measure emissions being less than the maximum allowed emission result in this be a compliant test or passing test.

The acceptable measurement uncertainty value without requiring revision of the compliance statement is base on conducted and radiated emissions being less than U_{CISPR} which is 3.6dB and 5.2dB respectively. CCS values (called U_{Lab} in CISPR 16-4-2) is less than U_{CISPR} as shown in the table above. Therefore, MU need not be considered for compliance.

This report shall not be reproduced except in full, without the written approval of Compliance Certification Services.

7 EMISSION TEST

7.1. CONDUCTED EMISSION MEASUREMENT

7.1.1. LIMITS

TEST STANDARD: Reference to EN 60945 clause 9.2 Table 5

FREQUENCY (MHz)	Quasi-peak
0.10 – 0.15	96~50
0.15 - 0.35	60~50
0.35 - 30.0	50

NOTE: 1. The lower limit shall apply at the transition frequencies.
2. All emanations from digital device or system, including any network of conductors and apparatus connected thereto, shall not exceed the level of field strengths specified above.

7.1.2. TEST INSTRUMENTS

Conducted Emission room # A				
Name of Equipment	**Manufacturer**	**Model**	**Serial Number**	**Calibration Due**
TEST RECEIVER	R&S	ESCI	101201	08/21/2016
LISN (EUT)	SCHWARZBECK	NSLK 8127	8127527	08/23/2016
BNC CABLE	EMCI	CFD300-NL	BNC#A8	05/19/2016
Pulse Limiter	R&S	ESH3Z2	SD-C002	08/23/2016
THERMO-HYGRO METER	WISEWIND	201A	No. 02	05/10/2016
Satellite Simulator	HJC	GPS-101	EN001	No Cal. Required
Test S/W	EZ-EMC			

NOTE: 1. The calibration interval of the above test instruments is 12 months and the calibrations are traceable to NML/ROC and NIST/USA.
2. N.C.R = No Calibration Request.

This report shall not be reproduced except in full, without the written approval of Compliance Certification Services.

7.1.3. TEST PROCEDURES (please refer to measurement standard or CCS SOP PA-031)

Procedure of Preliminary Test

- The EUT was set up as per the test configuration to simulate typical usage per the user's manual. When the EUT is a tabletop system, a wooden table with a height of 0.8 meters is used and is placed on the ground plane as per CISPR 16-2-1, 7.4.1 (see Test Facility for the dimensions of the ground plane used). When the EUT is a floor-standing equipment, it is placed on the ground plane which has a 15 cm non-conductive covering to insulate the EUT from the ground plane.
- Support equipment, if needed, was placed as per CISPR 16-2-1, 7.4.1.
- All I/O cables were positioned to simulate typical actual usage as per CISPR 16-2-1, 7.4.1.
- The test equipment EUT installed received DC power, through a Line Impedance Stabilization Network (LISN), which supplied power source and was grounded to the ground plane.
- All support equipment received power from a second LISN.
- The EUT test program was started. Emissions were measured on each current carrying line of the EUT using an EMI Test Receiver connected to the LISN powering the EUT.
- The Receiver scanned from 10kHz to 30MHz for emissions in each of the test modes.
- During the above scans, the emissions were maximized by cable manipulation.
- The test mode(s) described in Item 4.1 were scanned during the preliminary test.
- After the preliminary scan, we found the test mode described in Item 4.1 producing the highest emission level.
- The EUT configuration and cable configuration of the above highest emission level were recorded for reference of the final test.
- The power input cables between the a.c. and the d.c. power ports of the EUT and the artificial mains network shall be screened and not exceed 0.8 m in length.

Procedure of Final Test

- EUT and support equipment were set up on the test bench as per the configuration with highest emission level in the preliminary test.
- A scan was taken on both power lines, Line 1 and Line 2, recording at least the six highest emissions. Emission frequency and amplitude were recorded into a computer in which correction factors were used to calculate the emission level and compare reading to the applicable limit.
- The test data of the worst-case condition(s) was recorded.

This report shall not be reproduced except in full, without the written approval of Compliance Certification Services.

7.1.4. TEST SETUP

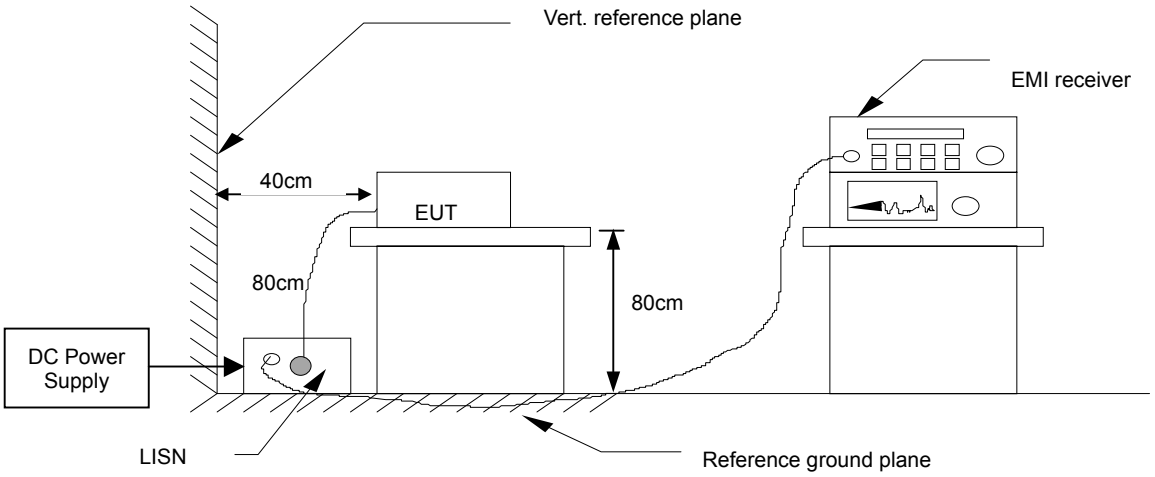

- For the actual test configuration, please refer to the related item – Photographs of the Test Configuration.

7.1.5. DATA SAMPLE

Freq. (MHz)	Reading (dBuV)	Factor (dB)	Result (dBuV)	Limit (dBuV)	Margin (dB)	Detector (Q)	Line (L1/L2)
x.xx	42.95	0.55	43.50	73	-29.50	Q	L1

Freq. = Emission frequency in MHz
Reading = Uncorrected Analyzer/Receiver reading
Factor = Insertion loss of LISN + Cable Loss + Pulse Limit
Result = Read Level + Factor
Limit = Limit stated in standard
Margin = Reading in reference to limit
P = Peak Reading
Q = Quasi-peak Reading
A = Average Reading
L1 = Hot side
L2 = Neutral side

Calculation Formula

Margin (dB) = Result (dBuV) – Limit (dBuV)

This report shall not be reproduced except in full, without the written approval of Compliance Certification Services.

7.1.6. TEST RESULTS

Model No.	WideLink B600W	**6dB Bandwidth**	200 Hz
Environmental Conditions	25°C, 58% RH	**Test Mode**	Mode 1
Tested by	Kevin Wang	**Phase**	L1
Standard	EN 60945		

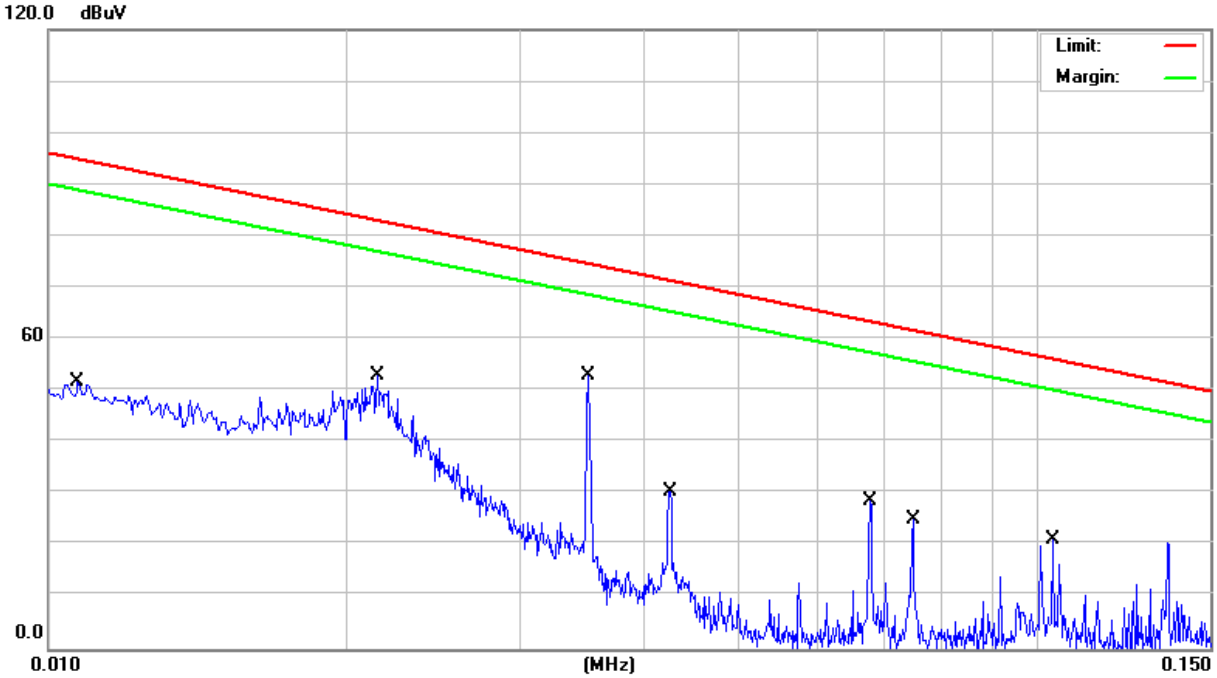

Conducted Emission Readings							
Frequency Range Investigated				**10 kHz to 150 kHz**			
Freq. (MHz)	Reading (dBuV)	Factor (dB)	Result (dBuV)	Limit (dBuV)	Margin (dB)	Detector (Q)	Line (L1/L2)
0.0107	**41.22**	**10.46**	**51.68**	**94.85**	**-43.17**	**Q**	**L1**
0.0215	**42.42**	**10.56**	**52.98**	**82.99**	**-30.01**	**Q**	**L1**
0.0352	**42.72**	**10.27**	**52.99**	**74.62**	**-21.63**	**Q**	**L1**
0.0425	**20.35**	**10.20**	**30.55**	**71.42**	**-40.87**	**Q**	**L1**
0.0680	**18.65**	**10.09**	**28.74**	**63.43**	**-34.69**	**Q**	**L1**
0.0750	**14.98**	**10.07**	**25.05**	**61.77**	**-36.72**	**Q**	**L1**
0.1040	**10.96**	**10.06**	**21.02**	**56.21**	**-35.19**	**Q**	**L1**

Note: 1. L1 = Line One (Live Line) / L2 = Line Two (Neutral Line).

This report shall not be reproduced except in full, without the written approval of Compliance Certification Services.

Model No.	WideLink B600W	**6dB Bandwidth**	200 Hz
Environmental Conditions	25°C, 58% RH	**Test Mode**	Mode 1
Tested by	Kevin Wang	**Phase**	L2
Standard	EN 60945		

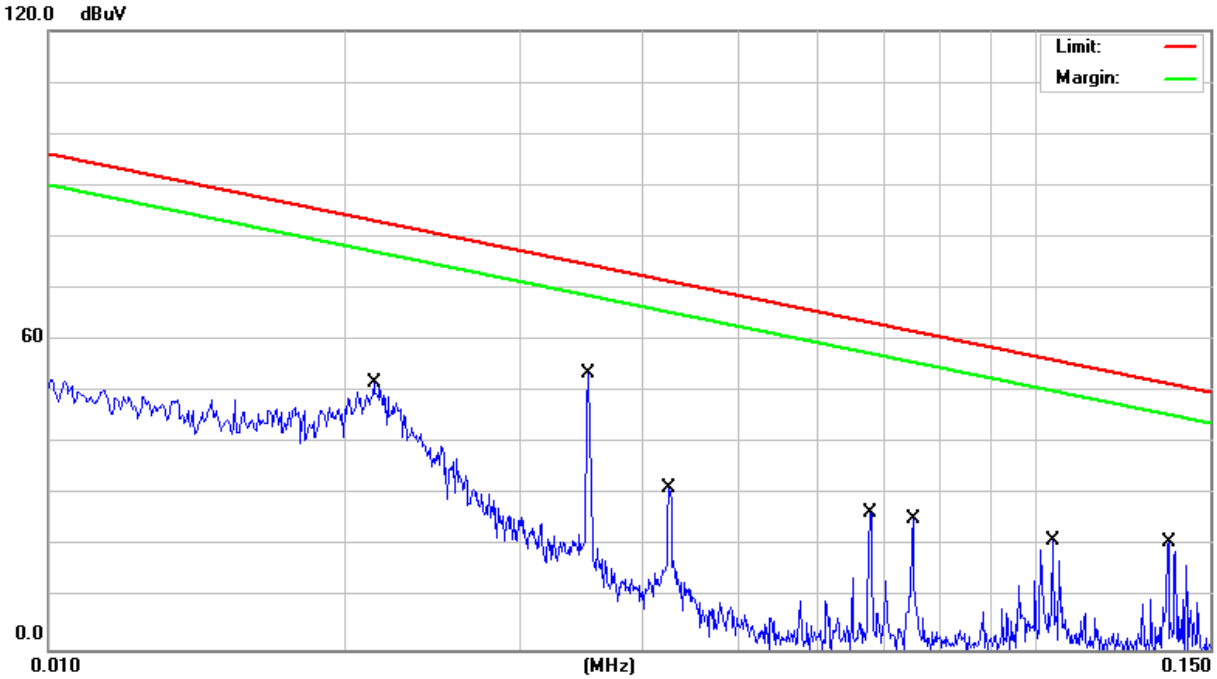

Conducted Emission Readings							
Frequency Range Investigated				**10 kHz to 150 kHz**			
Freq. (MHz)	Reading (dBuV)	Factor (dB)	Result (dBuV)	Limit (dBuV)	Margin (dB)	Detector (Q)	Line (L1/L2)
0.0214	**41.18**	**10.57**	**51.75**	**83.07**	**-31.32**	**Q**	**L2**
0.0352	**43.16**	**10.27**	**53.43**	**74.62**	**-21.19**	**Q**	**L2**
0.0425	**21.16**	**10.20**	**31.36**	**71.42**	**-40.06**	**Q**	**L2**
0.0680	**16.59**	**10.10**	**26.69**	**63.43**	**-36.74**	**Q**	**L2**
0.0750	**15.29**	**10.08**	**25.37**	**61.77**	**-36.40**	**Q**	**L2**
0.1040	**11.04**	**10.06**	**21.10**	**56.21**	**-35.11**	**Q**	**L2**
0.1361	**10.77**	**10.05**	**20.82**	**51.64**	**-30.82**	**Q**	**L2**

Note: 1. L1 = Line One (Live Line) / L2 = Line Two (Neutral Line).

This report shall not be reproduced except in full, without the written approval of Compliance Certification Services.

Model No.	WideLink B600W	**6dB Bandwidth**	9 kHz
Environmental Conditions	25°C, 58% RH	**Test Mode**	Mode 1
Tested by	Kevin Wang	**Phase**	L1
Standard	EN 60945		

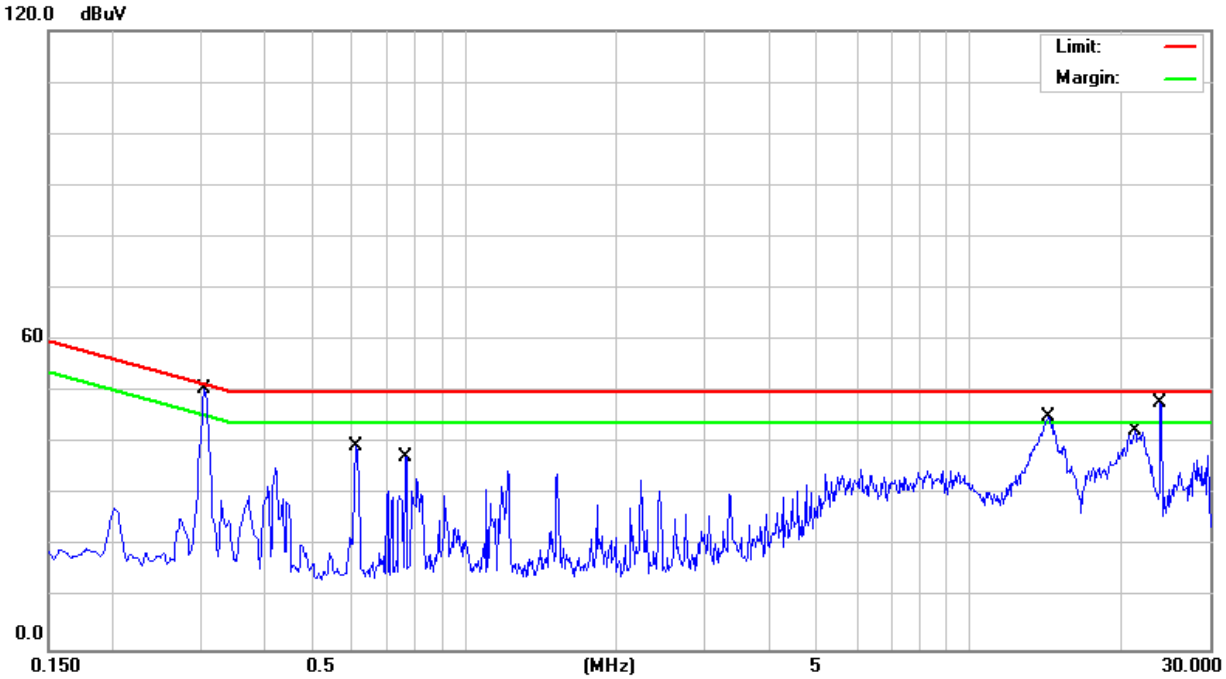

Conducted Emission Readings							
Frequency Range Investigated				**150 kHz to 30 MHz**			
Freq. (MHz)	Reading (dBuV)	Factor (dB)	Result (dBuV)	Limit (dBuV)	Margin (dB)	Detector (Q)	Line (L1/L2)
0.3060	**40.11**	**10.09**	**50.20**	**51.58**	**-1.38**	**Q**	**L1**
0.6100	**28.63**	**10.10**	**38.73**	**50.00**	**-11.27**	**Q**	**L1**
0.7660	**21.67**	**10.11**	**31.78**	**50.00**	**-18.22**	**Q**	**L1**
14.4180	**31.73**	**10.79**	**42.52**	**50.00**	**-7.48**	**Q**	**L1**
21.3300	**25.57**	**11.22**	**36.79**	**50.00**	**-13.21**	**Q**	**L1**
23.9980	**31.32**	**11.58**	**42.90**	**50.00**	**-7.10**	**Q**	**L1**

Note: 1. L1 = Line One (Live Line) / L2 = Line Two (Neutral Line).

This report shall not be reproduced except in full, without the written approval of Compliance Certification Services.

Model No.	WideLink B600W	**6dB Bandwidth**	9 kHz
Environmental Conditions	25°C, 58% RH	**Test Mode**	Mode 1
Tested by	Kevin Wang	**Phase**	L2
Standard	EN 60945		

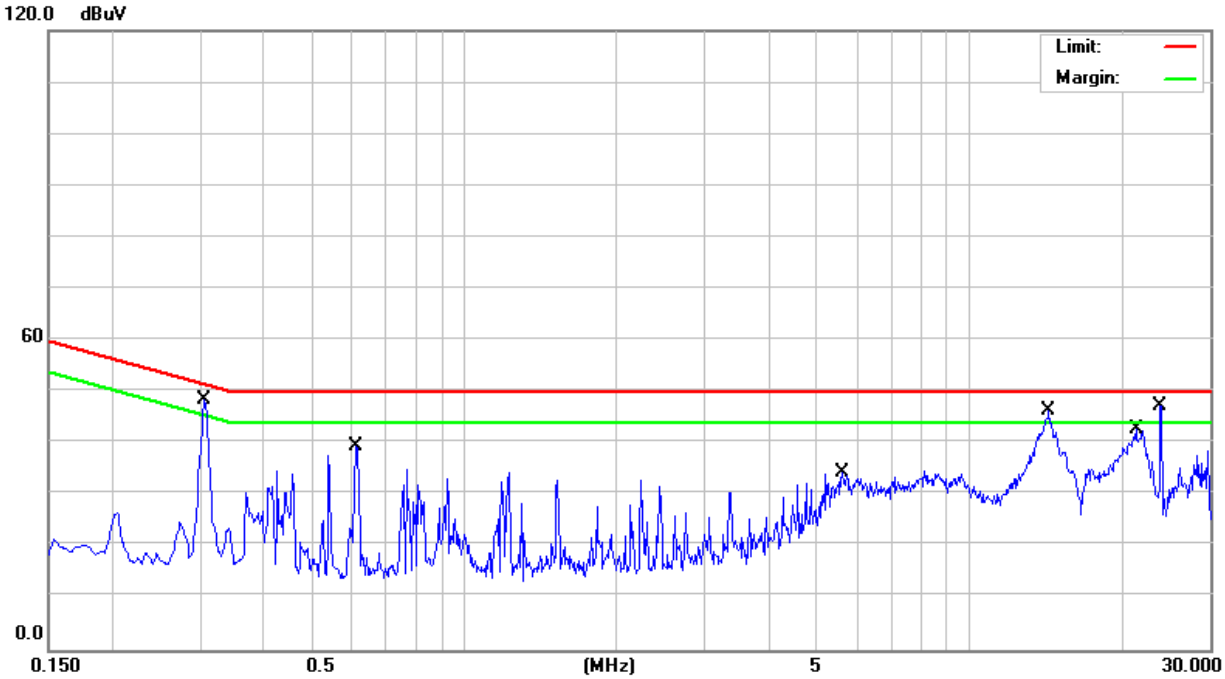

Conducted Emission Readings							
Frequency Range Investigated				**150 kHz to 30 MHz**			
Freq. (MHz)	Reading (dBuV)	Factor (dB)	Result (dBuV)	Limit (dBuV)	Margin (dB)	Detector (Q)	Line (L1/L2)
0.3060	**38.34**	**10.08**	**48.42**	**51.58**	**-3.16**	**Q**	**L2**
0.6100	**29.45**	**10.09**	**39.54**	**50.00**	**-10.46**	**Q**	**L2**
5.6060	**23.99**	**10.34**	**34.33**	**50.00**	**-15.67**	**Q**	**L2**
14.4220	**35.49**	**10.78**	**46.27**	**50.00**	**-3.73**	**Q**	**L2**
21.4100	**31.37**	**11.25**	**42.62**	**50.00**	**-7.38**	**Q**	**L2**
23.9580	**34.19**	**11.63**	**45.82**	**50.00**	**-4.18**	**Q**	**L2**

Note: 1. L1 = Line One (Live Line) / L2 = Line Two (Neutral Line).

This report shall not be reproduced except in full, without the written approval of Compliance Certification Services.

7.2. RADIATED EMISSION MEASUREMENT

7.2.1. LIMITS

TEST STANDARD: Reference to EN 60945 clause 9.3 Table 5

FREQUENCY (MHz)	dBuV/m (At 3m)
0.15 - 0.30	80 ~ 52 (Quasi-peak)
0.30 - 30	52 ~ 34 (Quasi-peak)
30 - 2000	54 (Quasi-peak)
156 - 165	30 (Peak) or 24 (Quasi-peak)

NOTE: 1. The lower limit shall apply at the transition frequencies.
2. Emission level (dBuV/m) = 20 log Emission level (uV/m).

7.2.2. TEST INSTRUMENTS

Test Site # Chamber D				
Name of Equipment	**Manufacturer**	**Model**	**Serial Number**	**Calibration Due**
EMI Test Receiver	R&S	ESCI	101202	09/24/2016
Loop Antenna	ARA	PLA-1030/B	1027	07/28/2016
Pre-Amplifier	HP	461A	0946A04138	11/27/2016
CABLE	EMCI	CFD300-NL	BNC#D1	05/19/2016
Thermo-Hygro Meter	Wisewind	201A	No. 02	05/10/2016
Signal Analyzer (9k – 44GHz)	Agilent	N9010A	MY53440125	12/13/2016
Horn Antenna (1 – 18GHz)	EMCO	3117	00139062	10/21/2016
Pre-Amplifier (1 – 26.5GHz)	HP	8449B	3008A01266	12/13/2016
CABLE (1 – 18GHz)	Rosnol	A1K50-EW0630	151126-1	12/20/2016
Satellite Simulator	HJC	GPS-101	EN001	No Cal. Required
Test S/W	EZ-EMC			

NOTE: 1. The calibration interval of the above test instruments is 12 months and the calibrations are traceable to NML/ROC and NIST/USA.
2. N.C.R = No Calibration Request.

This report shall not be reproduced except in full, without the written approval of Compliance Certification Services.

7.2.3. TEST PROCEDURE (please refer to measurement standard or CCS SOP PA-031)

Procedure of Preliminary Test

- The equipment was set up as per the test configuration to simulate typical usage per the user's manual. When the EUT is a tabletop system, a wooden turntable with a height of 0.8 meters is used which is placed on the ground plane. When the EUT is a floor-standing equipment, it is placed on the ground plane which has a 15 cm non-conductive covering to insulate the EUT from the ground plane.
- Support equipment, if needed, was placed as per CISPR 16-2-3.
- All I/O cables were positioned to simulate typical usage as per CISPR 16-2-3.
- The EUT received DC power source from the outlet socket under the turntable. All support equipment power received from another socket under the turntable.
- The antenna was placed at 3 meter away from the EUT as stated in CISPR 16-2-3. The antenna connected to the Spectrum Analyzer via a cable and at times a pre-amplifier would be used.
- The Analyzer / Receiver quickly scanned from 150KHz to 2000MHz. The EUT test program was started. Emissions were scanned and measured rotating the EUT to 360 degrees and positioning the antenna 1 to 4 meters above the ground plane, in both the vertical and the horizontal polarization, to maximize the emission reading level.
- The test mode(s) described in Item 4.1 were scanned during the preliminary test:
- After the preliminary scan, we found the test mode described in Item 4.1 producing the highest emission level.
- The EUT and cable configuration, antenna position, polarization and turntable position of the above highest emission level were recorded for the final test.

Procedure of Final Test

- EUT and support equipment were set up on the turntable as per the configuration with highest emission level in the preliminary test.
- The Analyzer / Receiver scanned from 150KHz to 2000MHz. Emissions were scanned and measured rotating the EUT to 360 degrees, varying cable placement and positioning the antenna 1 to 4 meters above the ground plane, in both the vertical and the horizontal polarization, to maximize the emission reading level.
- Recorded at least the six highest emissions. Emission frequency, amplitude, antenna position, polarization and turntable position were recorded into a computer in which correction factors were used to calculate the emission level and compare reading to the applicable limit and only Q.P. reading is presented.
- The test data of the worst-case condition(s) was recorded.

This report shall not be reproduced except in full, without the written approval of Compliance Certification Services.

7.2.4. TEST SETUP

150kHz ~ 30MHz

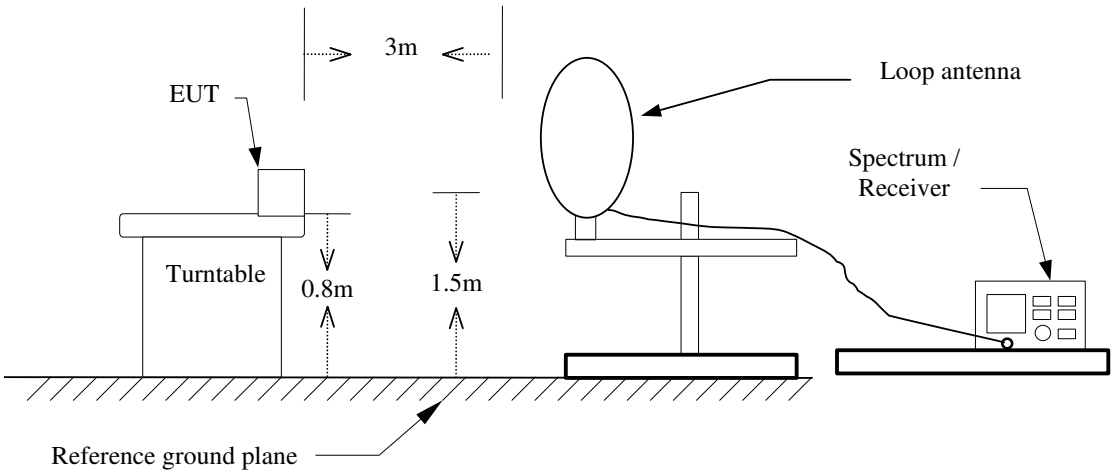

30MHz ~ 1GHz

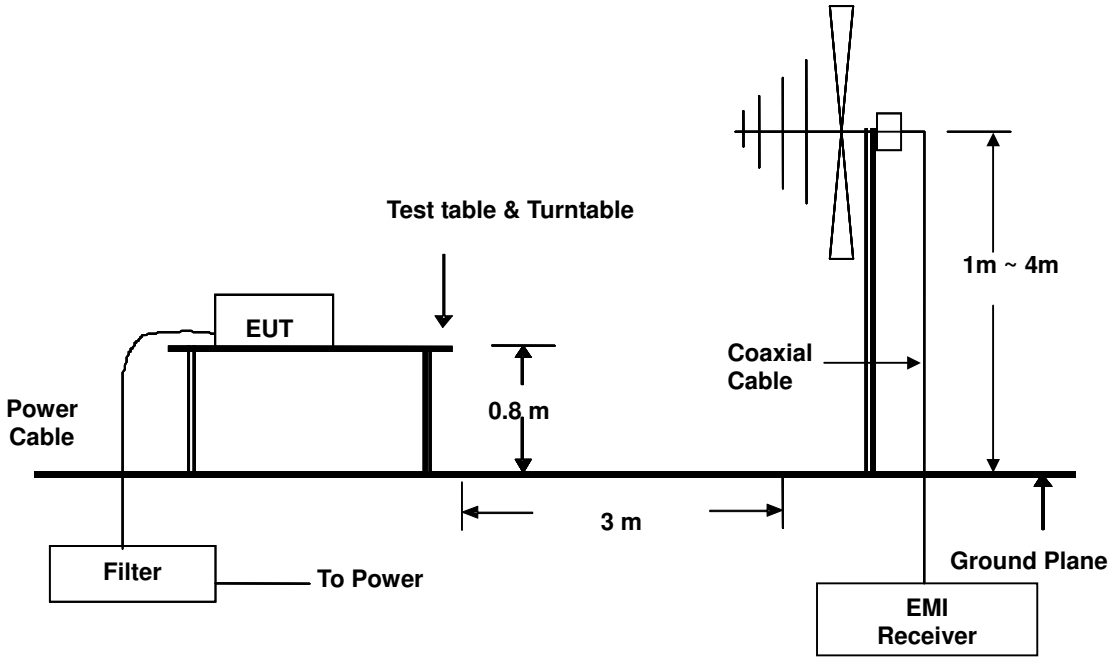

This report shall not be reproduced except in full, without the written approval of Compliance Certification Services.

1GHz ~ 2GHz

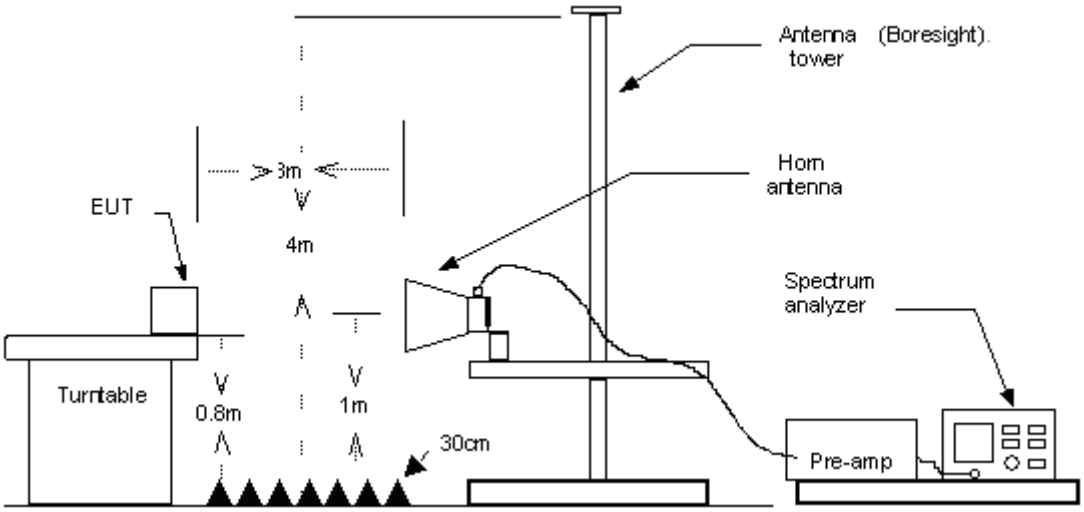

- For the actual test configuration, please refer to the related item – Photographs of the Test Configuration.

7.2.5. DATA SAMPLE

30MHz ~ 1GHz

Freq. (MHz)	Reading (dBuV)	Factor (dB/m)	Result (dBuV/m)	Limit (dBuV/m)	Margin (dB)	Detector (P/Q)	Pol. (H/V)
x.xx	14.0	12.2	26.2	40	-13.8	Q	H

1GHz ~ 2GHz

Freq. (MHz)	Reading (dBuV)	Factor (dB/m)	Result (dBuV/m)	Limit (dBuV/m)	Margin (dB)	Detector (Q)	Pol. (H/V)
x.xx	42.95	0.55	43.50	60	-16.50	Q	H

Freq. = Emission frequency in MHz
Reading = Uncorrected Analyzer/Receiver reading
Factor = Antenna Factor + Cable Loss - Amplifier Gain
Result = Reading + Factor
Limit = Limit stated in standard
Margin = Reading in reference to limit
P = Peak Reading
Q = Quasi-peak Reading
H = Antenna Polarization: Horizontal
V = Antenna Polarization: Vertical

Calculation Formula

Margin (dB) = Result (dBuV/m) – Limit (dBuV/m)

This report shall not be reproduced except in full, without the written approval of Compliance Certification Services.

7.2.6. TEST RESULTS

150kHz ~ 30MHz

Model No.	WideLink B600W	**Test Mode**	Mode 1
Environmental Conditions	22°C, 64% RH	**6dB Bandwidth**	9 kHz
Antenna Pole	Vertical	**Antenna Distance**	3m
Detector Function	Quasi-peak.	**Tested by**	Kevin Wang
Standard	EN 60945		

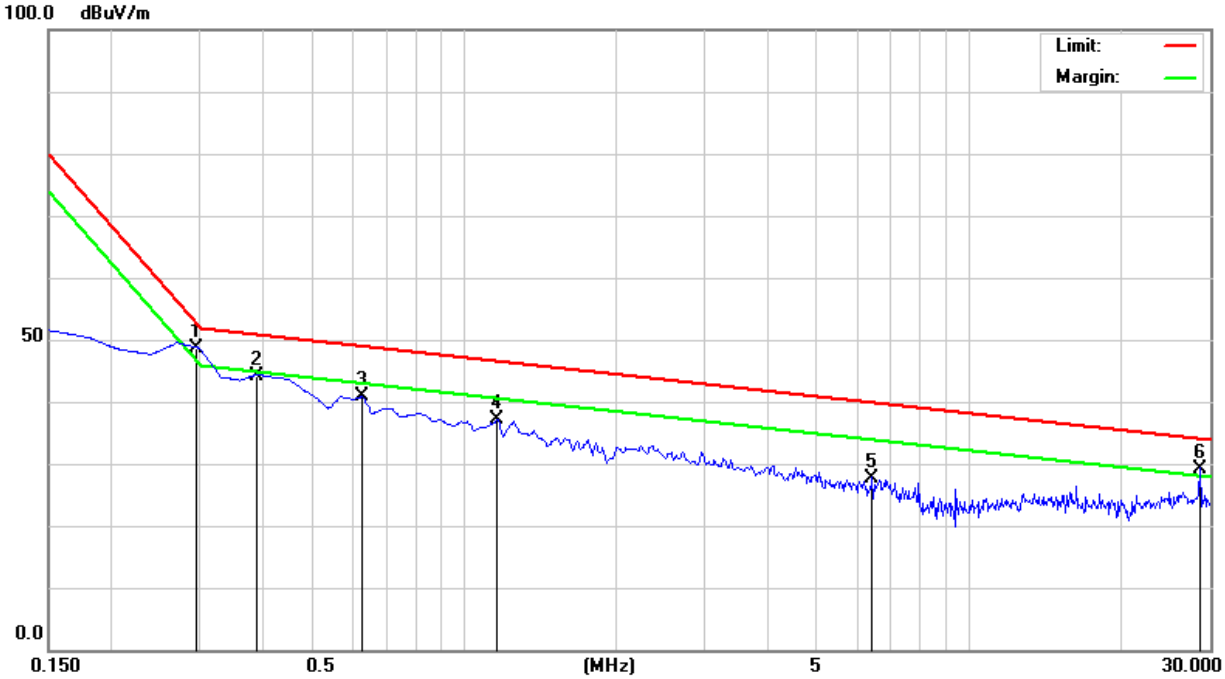

Radiated Emission Readings							
Frequency Range Investigated				**150kHz to 30MHz at 3m**			
Freq. (MHz)	Reading (dBuV)	Factor (dB/m)	Result (dBuV/m)	Limit (dBuV/m)	Margin (dB)	Detector (Q)	Pol. (H/V)
0.2940	**34.40**	**14.31**	**48.71**	**52.80**	**-4.09**	**Q**	**V**
0.3888	**32.00**	**12.11**	**44.11**	**50.99**	**-6.88**	**Q**	**V**
0.6276	**32.60**	**8.23**	**40.83**	**49.11**	**-8.28**	**Q**	**V**
1.1649	**33.10**	**3.94**	**37.04**	**46.70**	**-9.66**	**Q**	**V**
6.4483	**35.40**	**-7.66**	**27.74**	**40.01**	**-12.27**	**Q**	**V**
28.6567	**38.20**	**-8.95**	**29.25**	**34.18**	**-4.93**	**Q**	**V**

Note: 1. P= Peak Reading; Q= Quasi-peak Reading.

This report shall not be reproduced except in full, without the written approval of Compliance Certification Services.

Model No.	WideLink B600W	**Test Mode**	Mode 1
Environmental Conditions	22°C, 64% RH	**6dB Bandwidth**	9 kHz
Antenna Pole	Horizontal	**Antenna Distance**	3m
Detector Function	Quasi-peak.	**Tested by**	Kevin Wang
Standard	EN 60945		

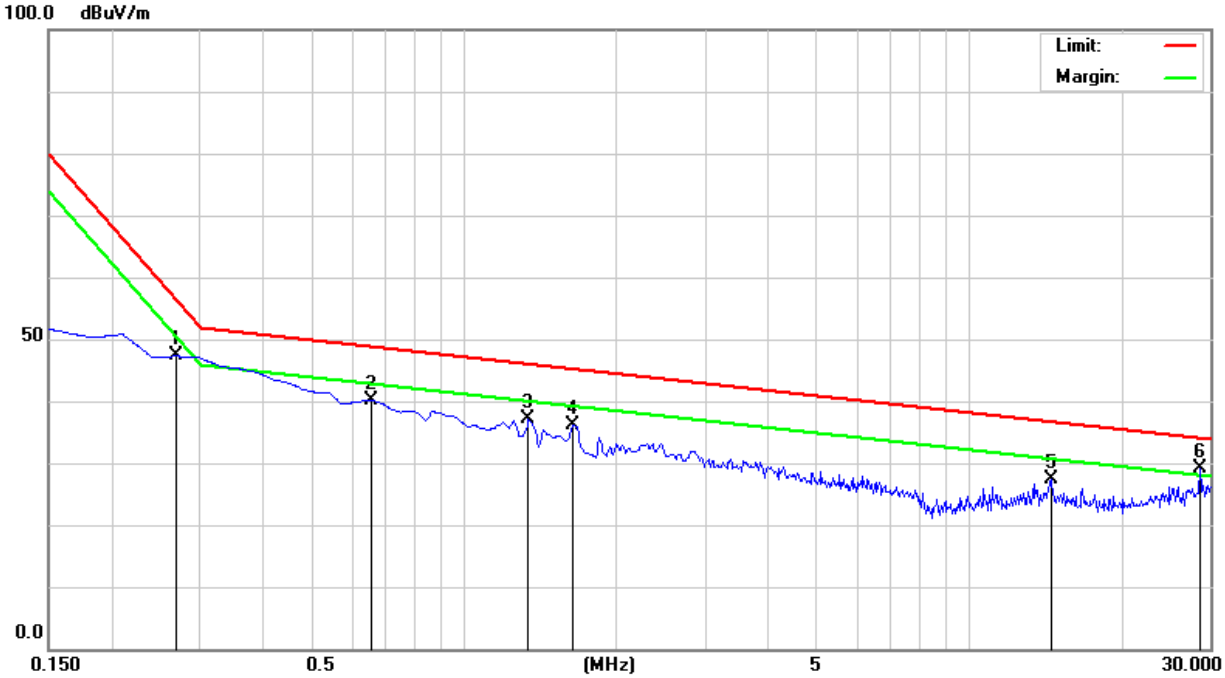

Radiated Emission Readings							
Frequency Range Investigated				**150kHz to 30MHz at 3m**			
Freq. (MHz)	Reading (dBuV)	Factor (dB/m)	Result (dBuV/m)	Limit (dBuV/m)	Margin (dB)	Detector (Q)	Pol. (H/V)
0.2694	**32.10**	**15.18**	**47.28**	**56.33**	**-9.05**	**Q**	**H**
0.6574	**32.30**	**7.82**	**40.12**	**48.93**	**-8.81**	**Q**	**H**
1.3440	**34.10**	**2.94**	**37.04**	**46.14**	**-9.10**	**Q**	**H**
1.6425	**34.90**	**1.26**	**36.16**	**45.35**	**-9.19**	**Q**	**H**
14.5676	**36.50**	**-9.17**	**27.33**	**36.82**	**-9.49**	**Q**	**H**
28.6567	**38.10**	**-8.95**	**29.15**	**34.18**	**-5.03**	**Q**	**H**

Note: 1. P= Peak Reading; Q= Quasi-peak Reading.

This report shall not be reproduced except in full, without the written approval of Compliance Certification Services.

156MHz ~ 165MHz

Model No.	WideLink B600W	**Test Mode**	Mode 1
Environmental Conditions	22°C, 64% RH	**6dB Bandwidth**	9 kHz
Antenna Pole	Vertical	**Antenna Distance**	3m
Detector Function	Peak	**Tested by**	Kevin Wang
Standard	EN 60945		

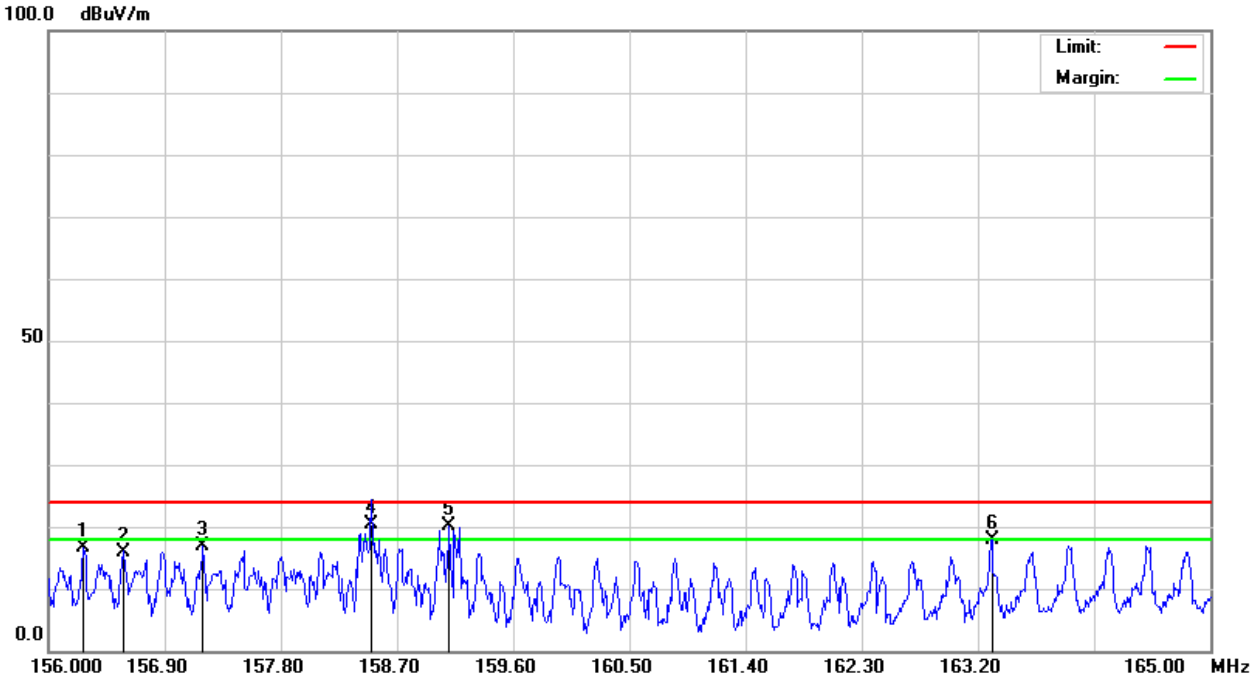

Radiated Emission Readings							
Frequency Range Investigated				**156MHz to 165MHz at 3m**			
Freq. (MHz)	Reading (dBuV)	Factor (dB/m)	Result (dBuV/m)	Limit (dBuV/m)	Margin (dB)	Detector (Q)	Pol. (H/V)
156.2700	**28.60**	**-11.99**	**16.61**	**24.00**	**-7.39**	**Q**	**V**
156.5760	**28.00**	**-12.01**	**15.99**	**24.00**	**-8.01**	**Q**	**V**
157.1970	**29.00**	**-12.06**	**16.94**	**24.00**	**-7.06**	**Q**	**V**
158.5020	**32.60**	**-12.13**	**20.47**	**24.00**	**-3.53**	**Q**	**V**
159.1050	**32.30**	**-12.18**	**20.12**	**24.00**	**-3.88**	**Q**	**V**
163.3080	**30.30**	**-12.33**	**17.97**	**24.00**	**-6.03**	**Q**	**V**

Note: 1. P= Peak Reading; Q= Quasi-peak Reading.

This report shall not be reproduced except in full, without the written approval of Compliance Certification Services.

Model No.	WideLink B600W	**Test Mode**	Mode 1
Environmental Conditions	22°C, 64% RH	**6dB Bandwidth**	9 kHz
Antenna Pole	Horizontal	**Antenna Distance**	3m
Detector Function	Peak	**Tested by**	Kevin Wang
Standard	EN 60945		

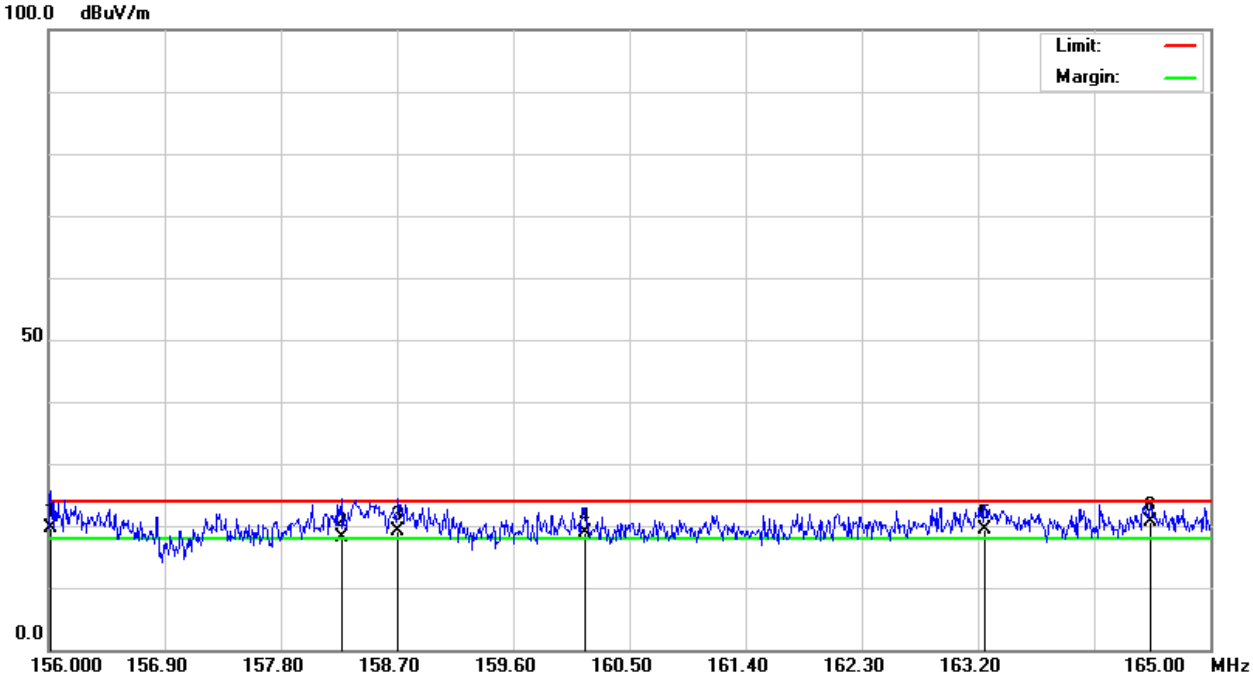

Radiated Emission Readings							
Frequency Range Investigated				**156MHz to 165MHz at 3m**			
Freq. (MHz)	Reading (dBuV)	Factor (dB/m)	Result (dBuV/m)	Limit (dBuV/m)	Margin (dB)	Detector (Q)	Pol. (H/V)
156.0180	**31.50**	**-11.98**	**19.52**	**24.00**	**-4.48**	**Q**	**H**
158.2680	**30.20**	**-12.12**	**18.08**	**24.00**	**-5.92**	**Q**	**H**
158.7090	**31.30**	**-12.15**	**19.15**	**24.00**	**-4.85**	**Q**	**H**
160.1580	**31.20**	**-12.25**	**18.95**	**24.00**	**-5.05**	**Q**	**H**
163.2540	**31.60**	**-12.33**	**19.27**	**24.00**	**-4.73**	**Q**	**H**
164.5320	**32.90**	**-12.37**	**20.53**	**24.00**	**-3.47**	**Q**	**H**

Note: 1. P= Peak Reading; Q= Quasi-peak Reading.

This report shall not be reproduced except in full, without the written approval of Compliance Certification Services.

30MHz ~ 1GHz

Model No.	WideLink B600W	**Test Mode**	Mode 1
Environmental Conditions	22°C, 64% RH	**6dB Bandwidth**	120 kHz
Antenna Pole	Vertical	**Antenna Distance**	3m
Detector Function	Quasi-peak.	**Tested by**	Kevin Wang
Standard	EN 60945		

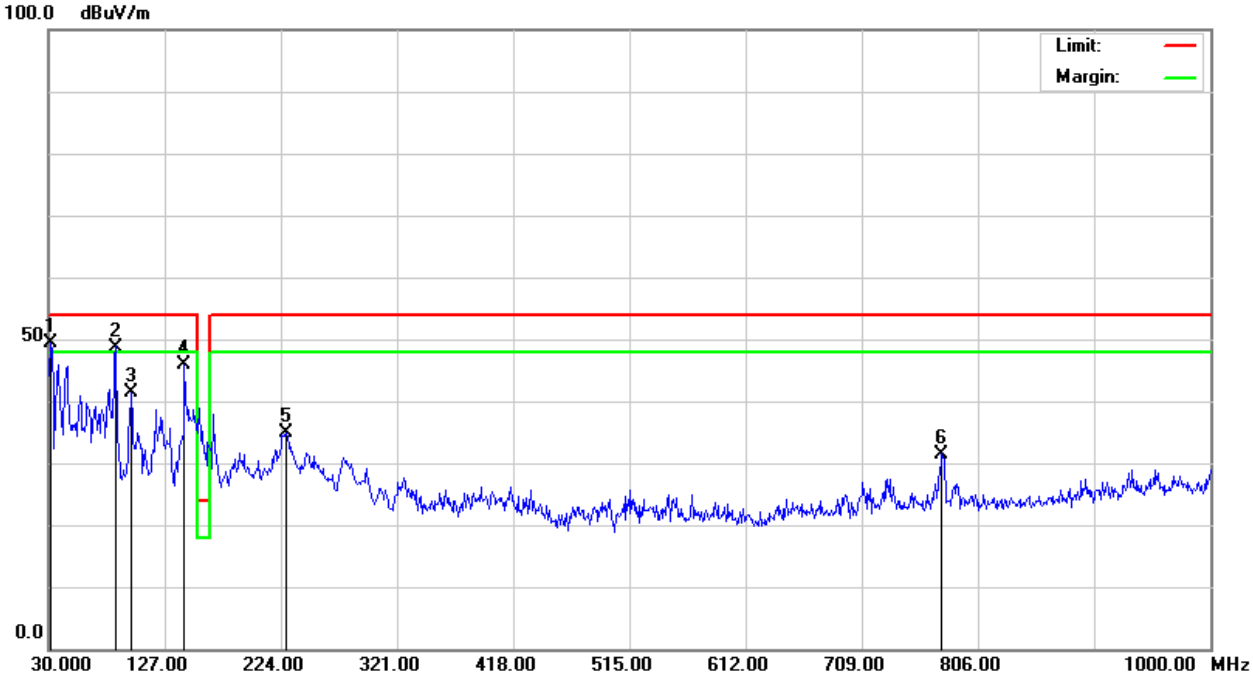

Radiated Emission Readings							
Frequency Range Investigated				**30MHz to 1000MHz at 3m**			
Freq. (MHz)	Reading (dBuV)	Factor (dB/m)	Result (dBuV/m)	Limit (dBuV/m)	Margin (dB)	Detector (Q)	Pol. (H/V)
31.9400	**53.10**	**-3.76**	**49.34**	**54.00**	**-4.66**	**Q**	**V**
86.2600	**65.70**	**-16.97**	**48.73**	**54.00**	**-5.27**	**Q**	**V**
98.8700	**55.80**	**-14.45**	**41.35**	**54.00**	**-12.65**	**Q**	**V**
143.4900	**56.90**	**-11.12**	**45.78**	**54.00**	**-8.22**	**Q**	**V**
227.8800	**47.90**	**-12.96**	**34.94**	**54.00**	**-19.06**	**Q**	**V**
775.9300	**32.70**	**-1.26**	**31.44**	**54.00**	**-22.56**	**Q**	**V**

Note: 1. P= Peak Reading; Q= Quasi-peak Reading.

This report shall not be reproduced except in full, without the written approval of Compliance Certification Services.

Model No.	WideLink B600W	**Test Mode**	Mode 1
Environmental Conditions	22°C, 64% RH	**6dB Bandwidth**	120 kHz
Antenna Pole	Horizontal	**Antenna Distance**	3m
Detector Function	Quasi-peak.	**Tested by**	Kevin Wang
Standard	EN 60945		

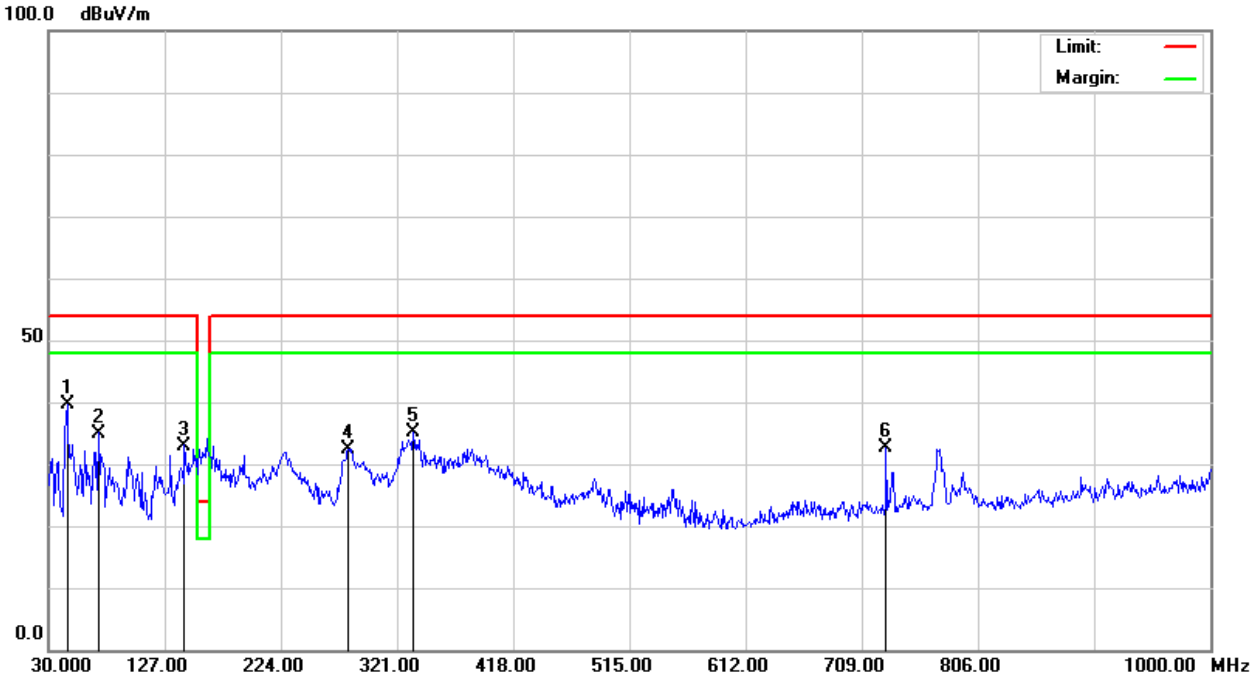

Radiated Emission Readings							
Frequency Range Investigated				**30MHz to 1000MHz at 3m**			
Freq. (MHz)	Reading (dBuV)	Factor (dB/m)	Result (dBuV/m)	Limit (dBuV/m)	Margin (dB)	Detector (Q)	Pol. (H/V)
45.5200	**53.90**	**-14.25**	**39.65**	**54.00**	**-14.35**	**Q**	**H**
71.7100	**51.10**	**-16.11**	**34.99**	**54.00**	**-19.01**	**Q**	**H**
143.4900	**44.10**	**-11.12**	**32.98**	**54.00**	**-21.02**	**Q**	**H**
280.2600	**42.90**	**-10.55**	**32.35**	**54.00**	**-21.65**	**Q**	**H**
334.5799	**44.60**	**-9.59**	**35.01**	**54.00**	**-18.99**	**Q**	**H**
729.3700	**34.60**	**-2.08**	**32.52**	**54.00**	**-21.48**	**Q**	**H**

Note: 1. P= Peak Reading; Q= Quasi-peak Reading.

This report shall not be reproduced except in full, without the written approval of Compliance Certification Services.

1GHz ~ 2GHz

Model No.	WideLink B600W	**Test Mode**	Mode 1
Environmental Conditions	22°C, 64% RH	**6dB Bandwidth**	120 kHz
Antenna Pole	Vertical	**Antenna Distance**	3m
Detector Function	Quasi-peak.	**Tested by**	Kevin Wang
Standard	EN 60945		

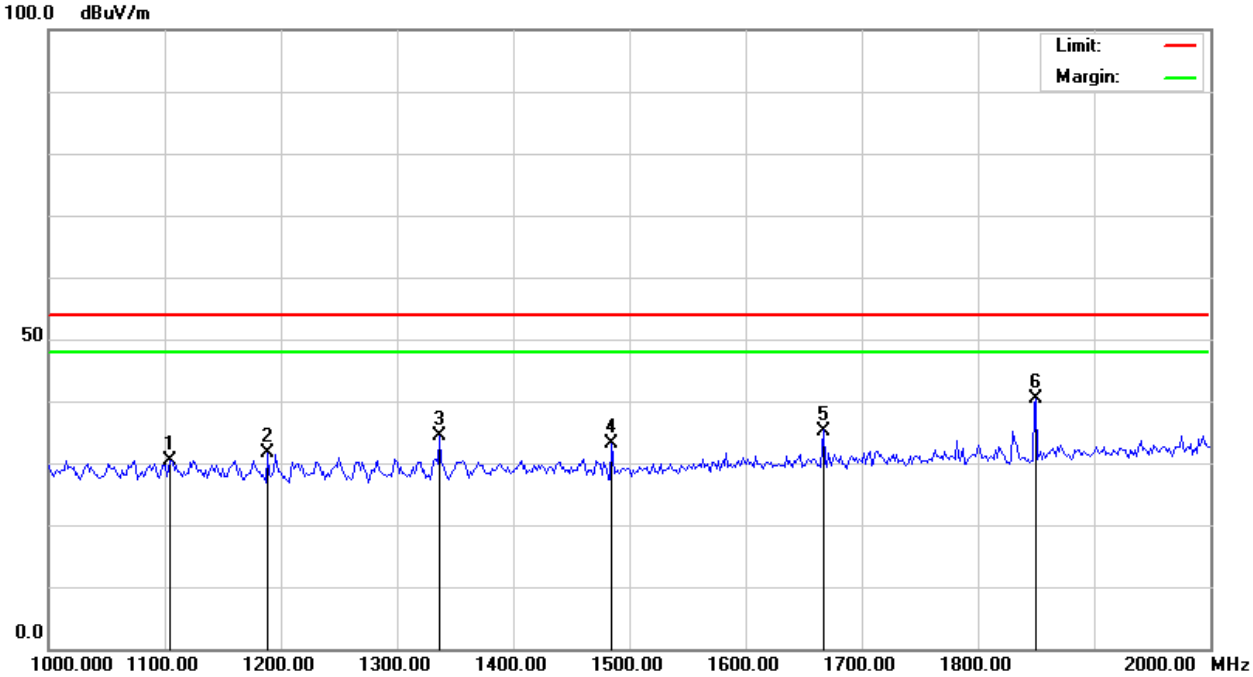

Radiated Emission Readings							
Frequency Range Investigated				**1000MHz to 2000MHz at 3m**			
Freq. (MHz)	Reading (dBuV)	Factor (dB/m)	Result (dBuV/m)	Limit (dBuV/m)	Margin (dB)	Detector (Q)	Pol. (H/V)
1105.000	**39.10**	**-8.70**	**30.40**	**54.00**	**-23.60**	**Q**	**V**
1188.333	**40.10**	**-8.52**	**31.58**	**54.00**	**-22.42**	**Q**	**V**
1336.667	**42.50**	**-8.22**	**34.28**	**54.00**	**-19.72**	**Q**	**V**
1485.000	**41.10**	**-7.91**	**33.19**	**54.00**	**-20.81**	**Q**	**V**
1666.667	**41.60**	**-6.38**	**35.22**	**54.00**	**-18.78**	**Q**	**V**
1850.000	**45.10**	**-4.74**	**40.36**	**54.00**	**-13.64**	**Q**	**V**

Note: 1. P= Peak Reading; Q= Quasi-peak Reading.

This report shall not be reproduced except in full, without the written approval of Compliance Certification Services.

Model No.	WideLink B600W	**Test Mode**	Mode 1
Environmental Conditions	22°C, 64% RH	**6dB Bandwidth**	120 kHz
Antenna Pole	Horizontal	**Antenna Distance**	3m
Detector Function	Quasi-peak.	**Tested by**	Kevin Wang
Standard	EN 60945		

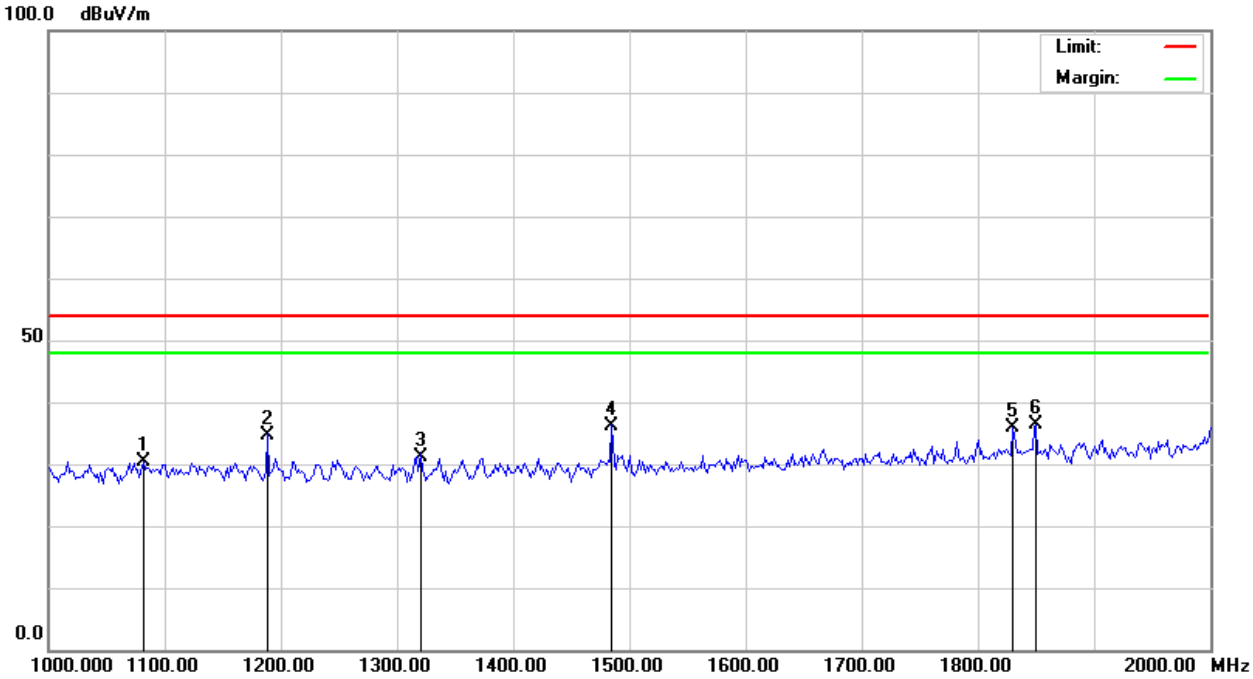

Radiated Emission Readings							
Frequency Range Investigated				**1000MHz to 2000MHz at 3m**			
Freq. (MHz)	Reading (dBuV)	Factor (dB/m)	Result (dBuV/m)	Limit (dBuV/m)	Margin (dB)	Detector (Q)	Pol. (H/V)
1081.667	**39.00**	**-8.74**	**30.26**	**54.00**	**-23.74**	**Q**	**H**
1188.333	**43.20**	**-8.52**	**34.68**	**54.00**	**-19.32**	**Q**	**H**
1320.000	**39.40**	**-8.25**	**31.15**	**54.00**	**-22.85**	**Q**	**H**
1485.000	**44.10**	**-7.91**	**36.19**	**54.00**	**-17.81**	**Q**	**H**
1830.000	**40.80**	**-4.92**	**35.88**	**54.00**	**-18.12**	**Q**	**H**
1850.000	**41.00**	**-4.74**	**36.26**	**54.00**	**-17.74**	**Q**	**H**

Note: 1. P= Peak Reading; Q= Quasi-peak Reading.

This report shall not be reproduced except in full, without the written approval of Compliance Certification Services.

8 IMMUNITY TEST

8.1. GENERAL DESCRIPTION

Product Standard	EN 60945: 2002 (For Clause 9, 10) IEC 60945: 2002 (For Clause 9, 10) IEC 60945 corrigendum 1: 2008	
	Test Type	**Minimum Requirement**
Basic Standard, Specification, and Performance Criterion required	IEC 61000-4-2	Electrostatic Discharge – ESD: 8kV air discharge, 6kV Contact discharge, Performance Criterion B
	IEC 61000-4-3	Radio-Frequency Electromagnetic Field Susceptibility Test – RS: 80 ~ 2000 MHz, 10V/m, 80% AM(400Hz), Performance Criterion A
	IEC 61000-4-4	Electrical Fast Transient/Burst - EFT, AC Power line: 2kV, Common On Signal/Control line: 1 kV, Performance Criterion B
	IEC 61000-4-5	Surge Immunity Test: 1.2/50 µs Open Circuit Voltage, 8/20 µs Short Circuit Current, AC Power Port ~ Line to line: 0.5kV, Line to ground: 1kV Performance Criterion B
	IEC 61000-4-6	Conducted Radio Frequency Disturbances Test – CS, AC Power Port; DC Power Port; Signal Ports and Telecommunication Ports: 0.15 ~ 80 MHz, 3Vrms, 80% AM, 400Hz, Other frequency: 2MHz, 3MHz, 4MHz, 6.2MHz, 8.2MHz, 12.6MHz, 16.5MHz, 18.8MHz, 22MHz and 25MHz, 10Vrms, 80% AM, 400Hz Performance Criterion A
	power supply short-term variation (all equipment categories except portable)	Voltage: nominal ± (20 ± 1) %, duration 1,5 s ± 0,2 s, Frequency: nominal ± (10 ± 0,5) %, duration 5 s ± 0,5 s, superimposed Performance Criterion B
	power supply failure (all equipment categories except portable)	60 s interruption a.c. and d.c. power ports Performance criterion C

This report shall not be reproduced except in full, without the written approval of Compliance Certification Services.

8.1.1. GENERAL EUT (AIS RELATED) TEST SETUP ENVIRONMENT

In order to do performance-check during the EMC immunity tests, an equipment setup (AIS related) as shown in the following diagram is used in general. A Satellite Simulator is used during the tests to emulate GPS signal source for the EUT.

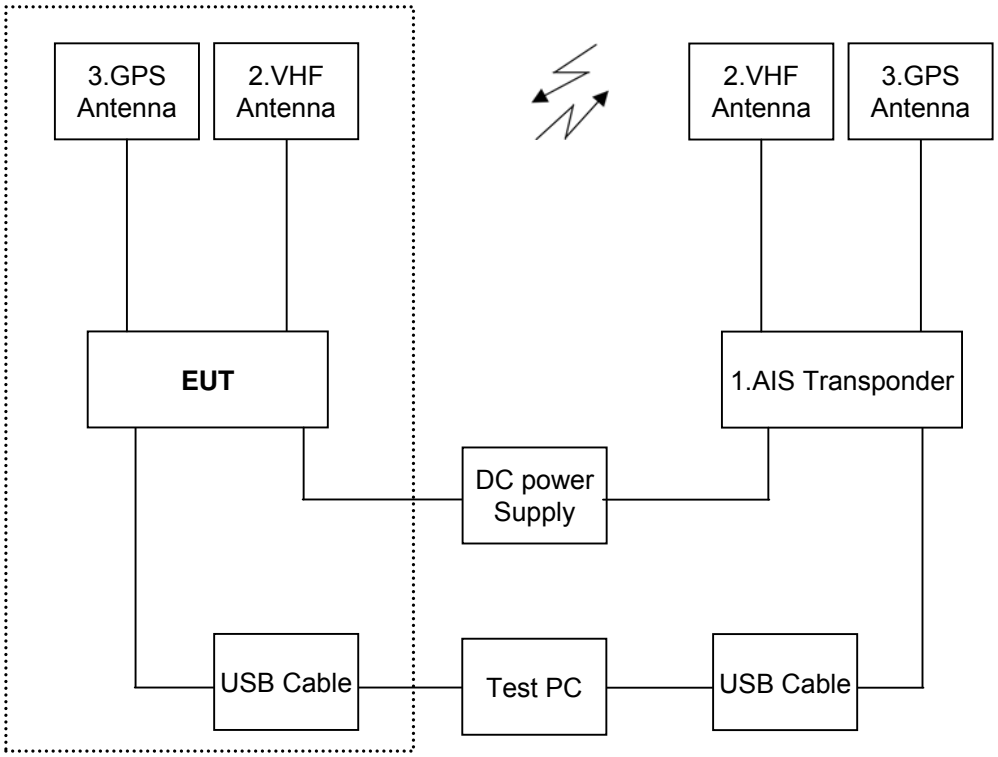

No.	Equipment	Model No.	Serial No.	FCC ID / BSMI ID	Brand Name	Data Cable	Power Cord
1	AIS Transponder	CAMINO-108	A6K082353	WZ7AIS-B108	AMEC	Shielded, 1.4m	N/A
2	VHF Antenna	ANT-11(TENTA-11) (AMEC P/N:AMEC-ANT-MFB-1200V)	N/A	N/A	N/A	Shielded, 0.6m	N/A
3	GPS Antenna	ANT-21 (AGGRESSOR-21) (AGGRESSOR-111-C) (AMEC P/N:M-ANT-C1283-570001-A)	N/A	N/A	AMEC	Shielded, 10m	N/A

The Satellite Simulator (GPS simulator model GPS-101) is put outside the EMC chamber with a cable connecting to a Tx antenna placed inside the EMC chamber. This GPS-101's Tx antenna transmits simulated-GPS-source-signal wirelessly to the GPS antenna (AMEC model ANT-21/AGGRESSOR-21) connected to the EUT.

This report shall not be reproduced except in full, without the written approval of Compliance Certification Services.

8.1.2. PERFORMANCE CHECK METHOD

The EUT is set into autonomous mode using channels AIS 1 and AIS 2 with a reporting interval of 2 s in the test environment in Section 8.1.1. An additional AIS transponder is used to monitor the content of reports and the reporting intervals of EUT. The EUT performance shall not be degraded during or after the test.
A PC software tool is used in parallel to record the AIS transmitting rate and receiving rate. The data is used to check if there is any degradation of performance or loss of function.

An IEC-61162-Datalogger software is used (running on PC) to check the EUT performance during and after the test together with the additional AIS transponder. The method and screenshots on how to verify the transmitting/receiving performance of the EUT are described in Section 10.

This report shall not be reproduced except in full, without the written approval of Compliance Certification Services.

8.2. GENERAL PERFORMANCE CRITERIA DESCRIPTION

Criteria A:	The EUT shall continue to operate as intended during and after the test. No degradation of performance or loss of function is allowed, as defined in the relevant equipment standard and in the technical specification published by the manufacturer.
Criteria B:	The EUT shall continue to operate as intended after the test. No degradation of performance or loss of function is allowed, as defined in the relevant equipment standard and in the technical specification published by the manufacturer. During the test, degradation or loss of function or performance which is self-recoverable is however, allowed, but no change of actual operating state or stored data is allowed.
Criteria C:	Temporary degradation or loss of function or performance is allowed during the test, provided the function is self-recoverable, or can be restored at the end of the test by the operation of the controls, as defined in the relevant equipment standard and in the technical specification published by the manufacturer.

NOTE: Reference to EN 60945 clause 10.1 & Table 6

This report shall not be reproduced except in full, without the written approval of Compliance Certification Services.

8.3. ELECTROSTATIC DISCHARGE (ESD)

8.3.1. TEST SPECIFICATION (Reference to EN 60945 clause 10.9)

Basic Standard:	IEC 61000-4-2
Discharge Impedance:	330 ohm / 150 pF
Discharge Voltage:	Air Discharge: 2 ; 4 ; 8 kV (Direct) Contact Discharge: 2 ; 4 ; 6 kV (Direct/Indirect)
Polarity:	Positive & Negative
Number of Discharge:	Minimum 10 times at each test point
Discharge Mode:	Single Discharge 1 second minimum

8.3.2. TEST INSTRUMENT

IMMUNITY SHIELDED ROOM				
Name of Equipment	**Manufacturer**	**Model**	**Serial Number**	**Calibration Due**
ESD Generator	Teseq	NSG 437	249	12/13/2016
Aneroid Barometer	Sato	7610-20	89090	10/15/2016
Thermo-Hygrometer	TECPEL	DTM-303	080269	04/19/2016
Satellite Simulator	HJC	GPS-101	EN001	No Cal. Required

NOTE: The calibration interval of the above test instruments is 12 months and the calibrations are traceable to NML/ROC and NIST/USA.

This report shall not be reproduced except in full, without the written approval of Compliance Certification Services.

8.3.3. TEST PROCEDURE (please refer to measurement standard or CCS SOP PA-022)

The discharges shall be applied in two ways:

a) Contact discharges to the conductive surfaces and coupling planes:
The EUT shall be exposed to at least 20 discharges, 10 each at negative and positive polarity, at a minimum of four test points. One of the test points shall be subjected to at least 10 indirect discharges to the center of the front edge of the **H**orizontal **C**oupling **P**lane (**HCP**). The remaining three test points shall each receive at least 10 direct contact discharges. If no direct contact test points are available, then at least 20 indirect discharges shall be applied in the indirect mode. Test shall be performed at a maximum repetition rate of one discharge per second.

b) Air discharges at slots and apertures and insulating surfaces:
On those parts of the EUT where it is not possible to perform contact discharge testing, the equipment should be investigated to identify user accessible points where breakdown may occur. Such points are tested using the air discharge method. This investigation should be restricted to those area normally handled by the user. A minimum of 10 single air discharges shall be applied to the selected test point for each such area.

The basic test procedure was in accordance with IEC 61000-4-2:

a) The EUT was located 0.1 m minimum from all side of the **HCP** (dimensions 1.6m x 0.8m).
b) The support units were located another table 30 cm away from the EUT, but direct support unit was/were located at same location as EUT on the HCP and keep at a distance of 10 cm with EUT.
c) The time interval between two successive single discharges was at least 1 second.
d) Contact discharges were applied to the non-insulating coating, with the pointed tip of the generator penetrating the coating and contacting the conducting substrate.
e) Air discharges were applied with the round discharge tip of the discharge electrode approaching the EUT as fast as possible (without causing mechanical damage) to touch the EUT. After each discharge, the ESD generator was removed from the EUT and re-triggered for a new single discharge. The test was repeated until all discharges were complete.
f) At least ten single discharges (in the most sensitive polarity) were applied at the front edge of each **HCP** opposite the center point of each unit of the EUT and 0.1 meters from the front of the EUT. The long axis of the discharge electrode was in the plane of the **HCP** and perpendicular to its front edge during the discharge.
g) At least ten single discharges (in the most sensitive polarity) were applied to the center of one vertical edge of the **V**ertical **C**oupling **P**lane (**VCP**) in sufficiently different positions that the four faces of the EUT were completely illuminated. The **VCP** (dimensions 0.5m x 0.5m) was placed vertically to and 0.1 meters from the EUT.

This report shall not be reproduced except in full, without the written approval of Compliance Certification Services.

8.3.4. TEST SETUP

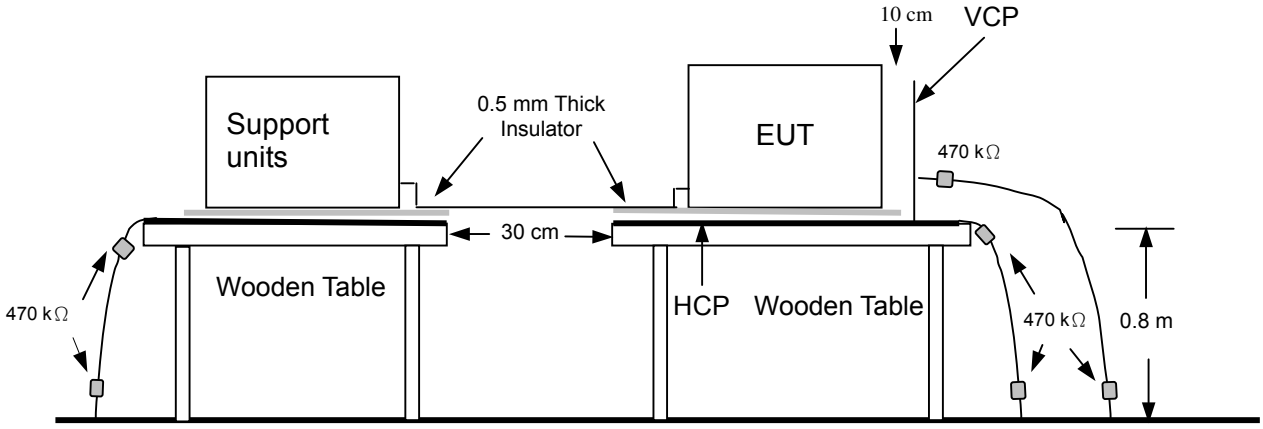

Ground Reference Plane

- For the actual test configuration, please refer to the related item – Photographs of the Test Configuration.

NOTE:

TABLE-TOP EQUIPMENT

The configuration consisted of a wooden table 0.8 meters high standing on the **G**round **R**eference **P**lane. The **GRP** consisted of a sheet of aluminum at least 0.25mm thick, and 2.5 meters square connected to the protective grounding system. A **H**orizontal **C**oupling **P**lane (1.6m x 0.8m) was placed on the table and attached to the **GRP** by means of a cable with 940k total impedance. The equipment under test, was installed in a representative system as described in section 7 of IEC 61000-4-2, and its cables were placed on the **HCP** and isolated by an insulating support of 0.5mm thickness. A distance of 1-meter minimum was provided between the EUT and the walls of the laboratory and any other metallic structure.

FLOOR-STANDING EQUIPMENT

The equipment under test was installed in a representative system as described in section 7 of IEC 61000-4-2, and its cables were isolated from the Ground Reference Plane by an insulating support of 0.1-meter thickness. The GRP consisted of a sheet of aluminum that is at least 0.25mm thick, and 2.5 meters square connected to the protective grounding system and extended at least 0.5 meters from the EUT on all sides.

This report shall not be reproduced except in full, without the written approval of Compliance Certification Services.

8.3.5. TEST RESULTS

Temperature	20°C	**Humidity**	43% RH
Pressure	1010mbar	**Tested By**	Bonny Tsai
Required Passing Performance		**Criterion B**	

Air Discharge							
Test Points	**Test Levels**			**Results**			
	± 2 kV	**± 4 kV**	**± 8 kV**	**Pass**	**Fail**	**Performance Criterion**	**Observation**
Front	☒	☒	☒	☒	☐	☒A ☐B	Note ☐1 ☒2
Back	☒	☒	☒	☒	☐	☒A ☐B	Note ☐1 ☒2
Left	☒	☒	☒	☒	☐	☒A ☐B	Note ☐1 ☒2
Right	☒	☒	☒	☒	☐	☒A ☐B	Note ☐1 ☒2
Top	☒	☒	☒	☒	☐	☒A ☐B	Note ☐1 ☒2

Contact Discharge							
Test Points	**Test Levels**			**Results**			
	± 2 kV	**± 4 kV**	**± 6 kV**	**Pass**	**Fail**	**Performance Criterion**	**Observation**
Front	☒	☒	☒	☒	☐	☒A ☐B	Note ☒1 ☐2
Back	☒	☒	☒	☒	☐	☒A ☐B	Note ☒1 ☐2

Discharge To Horizontal Coupling Plane							
Side of EUT	**Test Levels**			**Results**			
	± 2 kV	**± 4 kV**	**± 6 kV**	**Pass**	**Fail**	**Performance Criterion**	**Observation**
Front	☒	☒	☒	☒	☐	☒A ☐B	Note ☒1 ☐2
Back	☒	☒	☒	☒	☐	☒A ☐B	Note ☒1 ☐2
Left	☒	☒	☒	☒	☐	☒A ☐B	Note ☒1 ☐2
Right	☒	☒	☒	☒	☐	☒A ☐B	Note ☒1 ☐2

Discharge To Vertical Coupling Plane							
Side of EUT	**Test Levels**			**Results**			
	± 2 kV	**± 4 kV**	**± 6 kV**	**Pass**	**Fail**	**Performance Criterion**	**Observation**
Front	☒	☒	☒	☒	☐	☒A ☐B	Note ☒1 ☐2
Back	☒	☒	☒	☒	☐	☒A ☐B	Note ☒1 ☐2
Left	☒	☒	☒	☒	☐	☒A ☐B	Note ☒1 ☐2
Right	☒	☒	☒	☒	☐	☒A ☐B	Note ☒1 ☐2

NOTE: 1. There was no degradation of performance or loss of function found on EUT during and after the test.
2. No discharge point.

This report shall not be reproduced except in full, without the written approval of Compliance Certification Services.

The Photo for Discharge Points of EUT
Front

Back

Red Dot —Air Discharged
Blue Dot —Contact Discharged

This report shall not be reproduced except in full, without the written approval of Compliance Certification Services.

8.4. RADIATED, RADIO-FREQUENCY, ELECTROMAGNETIC FIELD (RS)

8.4.1. TEST SPECIFICATION (Reference to EN 60945 clause 10.4)

Basic Standard:	IEC 61000-4-3
Frequency Range:	80 ~ 2000 MHz
Field Strength:	10 V/m
Modulation:	400Hz Sine Wave, 80%, AM Modulation
Frequency Step:	1 % of preceding frequency value
Polarity of Antenna:	Horizontal and Vertical
Test Distance:	3 m
Antenna Height:	1.5 m

8.4.2. TEST INSTRUMENT

844 RS Chamber				
Name of Equipment	**Manufacturer**	**Model**	**Serial Number**	**Calibration Due**
Calibration of Field	N/A	Chamber#RS	80-1000MHz	04/01/2016
Signal Generator	Agilent	N5181A	MY47421336	12/10/2016
Electric Field Probe	AR	FL7006	0338955	06/14/2016
RF Power Meter	Boonton	4242-01-02	14357	03/09/2017
Amplifier	AR	500W1000A	320994	No Cal. Required
Direction Coupler	AR	DC6180A	312189	No Cal. Required
Broadband Antenna	AR	AT1080	311819	No Cal. Required
Thermo-Hygrometer	TFA	N/A	NO.6	10/25/2016
Calibration of Field	N/A	Chamber#RS	1000-6000MHz	06/21/2016
Amplifier	AR	50S1G6M1	0343693	No Cal. Required
Horn Antenna	EMCO	3115	5761	No Cal. Required
Direction Coupler	AR	DC7200	0343647	No Cal. Required
Satellite Simulator	HJC	GPS-101	EN001	No Cal. Required
Software	Emcware Ver. 2.6.0.16			

NOTE: 1. The calibration interval of the above test instruments is 12 months and the calibrations are traceable to NML/ROC and NIST/USA.
2. N.C.R.= No Calibration required

This report shall not be reproduced except in full, without the written approval of Compliance Certification Services.

8.4.3. TEST PROCEDURE (please refer to measurement standard or CCS SOP PA-023)

The test procedure was in accordance with IEC 61000-4-3

a) The testing was performed in a fully anechoic chamber. The transmit antenna was located at a distance of 3 meter from the EUT.

b) The frequency range is swept from 80 MHz to 2000 MHz with the signal 80% amplitude modulated with a 400Hz sine-wave. The rate of sweep did not exceed 1.5 x 10^{-3} decade/s, where the frequency range is swept incrementally, the step size was 1% of preceding frequency value.

c) The dwell time at each frequency shall be not less than the time necessary for the EUT to be able to respond.

d) The test was performed with the EUT exposed to both vertically and horizontally polarized fields on each of the four sides.

8.4.4. TEST SETUP

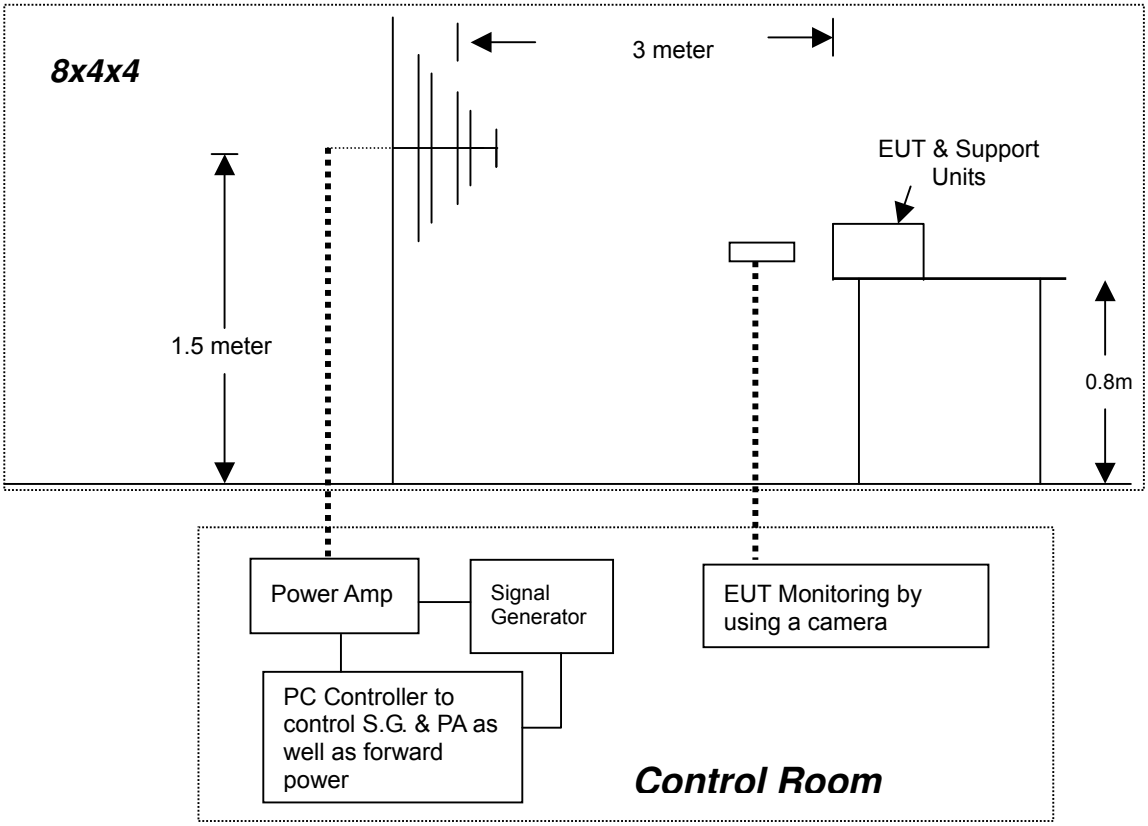

- For the actual test configuration, please refer to the related item – Photographs of the Test Configuration.

This report shall not be reproduced except in full, without the written approval of Compliance Certification Services.

NOTE:

TABLETOP EQUIPMENT

The EUT installed in a representative system as described in section 7 of IEC 61000-4-3 was placed on a non-conductive table 0.8 meters in height. The system under test was connected to the power and signal wire according to relevant installation instructions.

FLOOR STANDING EQUIPMENT

The EUT installed in a representative system as described in section 7 of IEC 61000-4-3 was placed on a non-conductive wood support 0.1 meters in height. The system under test was connected to the power and signal wire according to relevant installation instructions.

8.4.5. TEST RESULTS

Temperature	23°C	**Humidity**	60% RH
Pressure	1010mbar	**Dwell Time**	3 sec.
Tested By	Bonny Tsai	**Required Passing Performance**	**Criterion A**

Frequency (MHz)	Polarity	Azimuth	Field Strength (V/m)	Observation	Result
80 ~ 2000	V&H	0	10	Note	PASS
80 ~ 2000	V&H	90	10	Note	PASS
80 ~ 2000	V&H	180	10	Note	PASS
80 ~ 2000	V&H	270	10	Note	PASS

NOTE: There was no degradation of performance or loss of function found on EUT during and after the test.

This report shall not be reproduced except in full, without the written approval of Compliance Certification Services.

8.5. ELECTRICAL FAST TRANSIENT (EFT)

8.5.1. TEST SPECIFICATION (Reference to EN 60945 clause 10.5)

Basic Standard:	IEC 61000-4-4
Test Voltage:	Common On Signal/Control line: 1 kV
Polarity:	Positive & Negative
Impulse Frequency:	5 kHz at 1kV & 2.5kHz at 2kV
Impulse Wave-shape:	5/50 ns
Burst Duration:	15 ms
Burst Period:	300 ms
Test Duration:	3 min to 5 min for each of positive and negative polarity pulses

8.5.2. TEST INSTRUMENT

Immunity Shield Room				
Name of Equipment	**Manufacturer**	**Model**	**Serial Number**	**Calibration Due**
EMC Immunity Tester	EMC Partner	TRANSIENT 2000	1117	03/10/2017
Capacitive Clamp	EMC-Partner	CN-EFT1000	589	07/21/2016
Satellite Simulator	HJC	GPS-101	EN001	No Cal. Required
Software	Genecs Ver. 3.27			

NOTE: 1. The calibration interval of the above test instruments is 12 months and the calibrations are traceable to NML/ROC and NIST/USA.
2. N.C.R.= No Calibration required

8.5.3. TEST PROCEDURE (please refer to measurement standard or CCS SOP PA-024)

a) All types of cables, including their length, and the interface port of the EUT to which they were connected.

b) Both positive and negative polarity discharges were applied.

c) The length of the "hot wire" from the coaxial output of the EFT generator to the terminals on the EUT should not exceed 0.5 meter.

d) The duration time of each test sequential was 1 minute.

e) The transient/burst waveform was in accordance with IEC 61000-4-4, 5/50ns.

This report shall not be reproduced except in full, without the written approval of Compliance Certification Services.

8.5.4. TEST SETUP

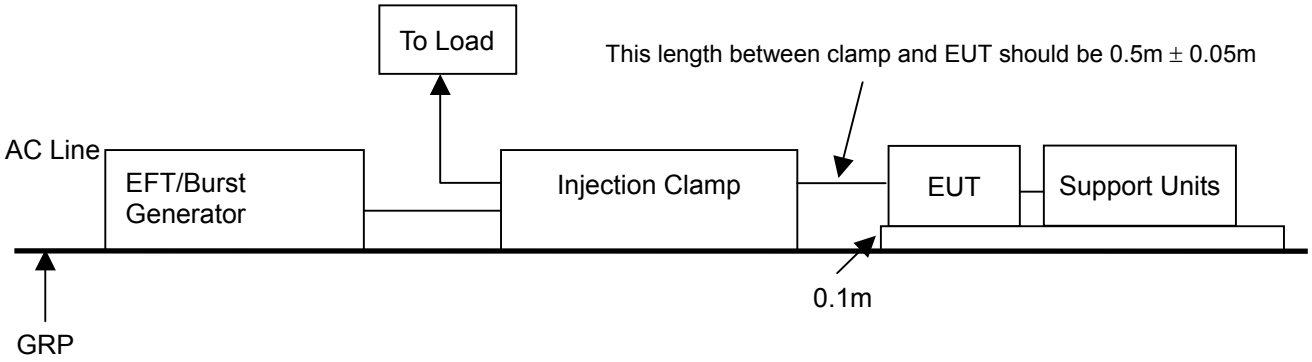

- For the actual test configuration, please refer to the related item – Photographs of the Test Configuration.

NOTE:

TABLETOP EQUIPMENT

The configuration consisted of a wooden table (0.1m high) standing on the Ground Reference Plane. The GRP consisted of a sheet of aluminum (at least 0.25mm thick and 2.5m square) connected to the protective grounding system. A minimum distance of 0.5m was provided between the EUT and the walls of the laboratory or any other metallic structure.

FLOOR STANDING EQUIPMENT

The EUT installed in a representative system as described in section 7 of IEC 61000-4-4 and its cables, were isolated from the Ground Reference Plane by an insulating support that is 0.1-meter thick. The GRP consisted of a sheet of aluminum (at least 0.25mm thick and 2.5m square) connected to the protective grounding system.

8.5.5. TEST RESULTS

Temperature	20°C	**Humidity**	50% RH
Pressure	1010mbar	**Tested By**	Bonny Tsai
Required Passing Performance		**Criterion B**	

Test Point	Polarity	Test Level (kV)	Performance Criterion	Observation	Result
GPS	+/-	1	☒A ☐B	Note ☒1 ☐2	PASS
VHF	+/-	1	☒A ☐B	Note ☒1 ☐2	PASS
NMEA 0183	+/-	1	☒A ☐B	Note ☒1 ☐2	PASS
NMEA 2000	+/-	1	☒A ☐B	Note ☒1 ☐2	PASS
USB	+/-	1	☒A ☐B	Note ☒1 ☐2	PASS

NOTE: 1. There was no degradation of performance or loss of function found on EUT during and after the test.

This report shall not be reproduced except in full, without the written approval of Compliance Certification Services.

8.6. SURGE IMMUNITY TEST

8.6.1. TEST SPECIFICATION (Reference to EN 60945 clause 10.6)

Basic Standard:	IEC 61000-4-5
Wave-Shape:	Combination Wave 1.2/50 μs Open Circuit Voltage 8 /20 μs Short Circuit Current,
Test Voltage:	AC Power: Power Line ~ Line to Line: 0.5 kV; Line to Ground: 1 kV
Surge Input/Output:	Power Line: L-N / L-PE / N-PE
Generator Source Impedance:	2 ohm between networks 12 ohm between network and ground
Polarity:	Positive/Negative
Phase Angle:	AC Power: 0° / 90° / 180° / 270°
Pulse Repetition Rate:	1 time / min. (maximum)
Number of Tests:	5 min for each of positive and negative polarity pulses

8.6.2. TEST INSTRUMENT

Immunity Shield Room				
Name of Equipment	**Manufacturer**	**Model**	**Serial Number**	**Calibration Due**

NOTE: 1. The calibration interval of the above test instruments is 12 months and the calibrations are traceable to NML/ROC and NIST/USA.
2. N.C.R.= No Calibration required

This report shall not be reproduced except in full, without the written approval of Compliance Certification Services.

8.6.3. TEST PROCEDURE (please refer to measurement standard or CCS SOP PA-025)

a) For EUT power supply:

The surge is applied to the EUT power supply terminals via the capacitive coupling network. Decoupling networks are required in order to avoid possible adverse effects on equipment not under test that may be powered by the same lines, and to provide sufficient decoupling impedance to the surge wave. The power cord between the EUT and the coupling/decoupling networks was shorter than 2 meters in length.

b) For test applied to unshielded un-symmetrically operated interconnection lines of EUT:

The surge was applied to the lines via the capacitive coupling. The coupling / decoupling networks didn't influence the specified functional conditions of the EUT. The interconnection line between the EUT and the coupling/decoupling networks was shorter than 2 meters in length.

c) For test applied to unshielded symmetrically operated interconnection / telecommunication lines of EUT:

The surge was applied to the lines via gas arrestors coupling. Test levels below the ignition point of the coupling arrestor were not specified. The interconnection line between the EUT and the coupling/decoupling networks was shorter than 2 meters in length.

8.6.4. TEST SETUP

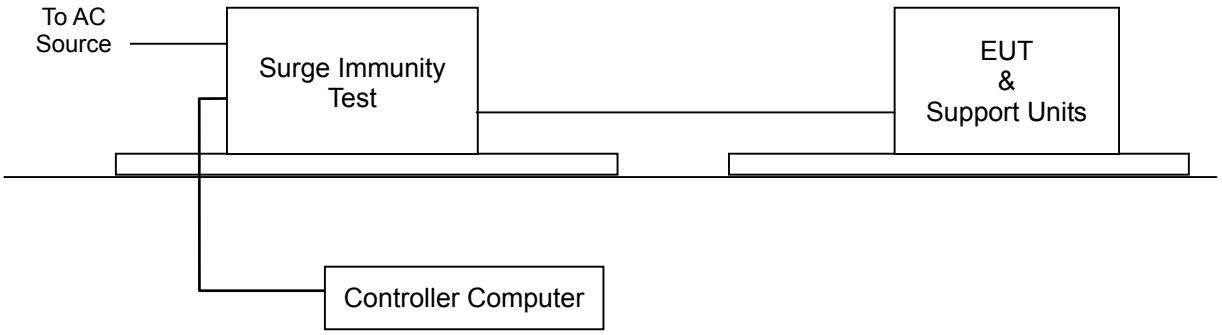

- For the actual test configuration, please refer to the related item – Photographs of the Test Configuration.

8.6.5. TEST RESULTS

Temperature	N/A	**Humidity**	N/A
Pressure	N/A	**Tested By**	N/A
Required Passing Performance		**Criterion B**	

Test Point	Polarity	Test Level (kV)	Performance Criterion	Observation	Result
L - N	+/-	0.5	☐A ☐B	Note ☒1 ☐2	N/A
L - PE	+/-	1	☐A ☐B	Note ☒1 ☐2	N/A
N - PE	+/-	1	☐A ☐B	Note ☒1 ☐2	N/A

Note: 1. The subject equipment is not intended to be connected to AC mains supply. Therefore, this test is not applicable.

This report shall not be reproduced except in full, without the written approval of Compliance Certification Services.

8.7. CONDUCTED RADIO FREQUENCY DISTURBANCES (CS)

8.7.1. TEST SPECIFICATION (Reference to EN 60945 clause 10.3)

Basic Standard:	IEC 61000-4-6
Frequency Range:	(1) 0.15MHz~80MHz (2) 2MHz, 3MHz, 4MHz, 6.2MHz, 8.2MHz, 12.6MHz, 16.5MHz 18.8MHz, 22MHz, 25MHz
Field Strength:	(1) 3Vrms; (2) 10Vrms
Modulation:	400Hz Sine Wave, 80%, AM Modulation
Frequency Step:	1 % of preceding frequency value
Coupled cable:	DC Power Mains, Unshielded; All I/O Line, Unshielded
Coupling device:	CDN-M2 (2 wires); EM-Clamp

8.7.2. TEST INSTRUMENT

CS Room				
Name of Equipment	**Manufacturer**	**Model**	**Serial Number**	**Calibration Due**
CWS Generator	EM Test	CWS 500N1.4	P1446143188	02/21/2017
CDN (EUT)	Teseq	CDN M016	35820	02/22/2017
CDN	Teseq	CDN M016	35821	02/22/2017
EM Clamp	Schaffner	KEMZ 801	19227	02/22/2017
Attenuator	EMCI	SA3NL	10006F	No Cal. Required
Satellite Simulator	HJC	GPS-101	EN001	No Cal. Required
Software	icd.control Ver. 5.1.9			

NOTE: 1. The calibration interval of the above test instruments is 12 months and the calibrations are traceable to NML/ROC and NIST/USA.
2. N.C.R.= No Calibration required

8.7.3. TEST PROCEDURE (please refer to measurement standard or CCS SOP PA-026)

The EUT shall be tested within its intended operating and climatic conditions.

The test shell performed with the test generator connected to each of the coupling and decoupling devices in turn, while the other non-excited RF input ports of the coupling devices are terminated by a 50-ohm load resistor.

The frequency range was swept from 150 kHz to 80 MHz, using the signal level established during the setting process and with a disturbance signal of 80 % amplitude. The signal was modulated with a 400Hz sine wave, pausing to adjust the RF signal level or the switch coupling devices as necessary. The sweep rate was 1.5 x 10^{-3} decades/s. Where the frequency range is swept incrementally, the step size was 1 % of preceding frequency value from 150 kHz to 80 MHz.

Additionally the following fixed frequencies 2 ,3 ,4 ,6.2 ,8.2 ,12.6 ,16.5 ,18.8 ,22 and 25 MHz

The dwell time at each frequency was less than the time necessary for the EUT to be exercised, and able to respond. Sensitive frequencies such as clock frequency(ies) and harmonics or frequencies of dominant interest, was analyzed separately.

Attempts was made to fully exercise the EUT during testing, and to fully interrogate all exercise modes selected for susceptibility.

This report shall not be reproduced except in full, without the written approval of Compliance Certification Services.

8.7.4. TEST SETUP

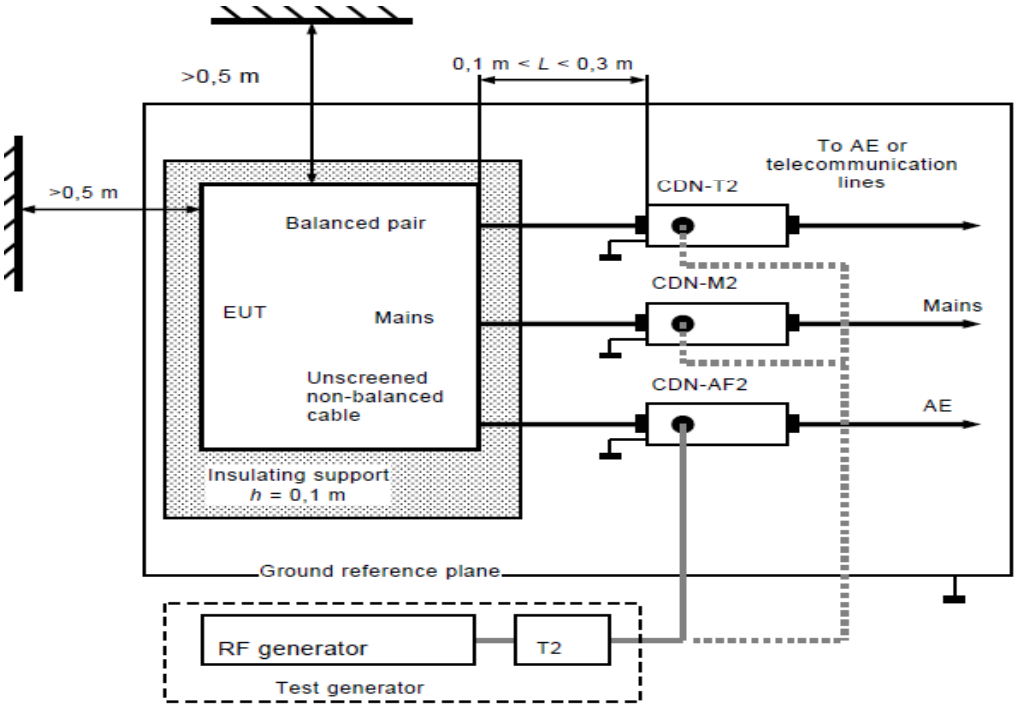

Note: 1. The CDNs and / or EM clamp used for real test depends on ports and cables configuration of EUT.
2. The EUT clearance from any metallic obstacles shall be at least 0.5m

- For the actual test configuration, please refer to the related item – Photographs of the Test Configuration.

NOTE:

TABLE-TOP AND FLOOR-STANDING EQUIPMENT

The equipment to be tested is placed on an insulating support of 0.1 meters height above a ground reference plane. All relevant cables shall be provided with the appropriate coupling and decoupling devices at a distance between 0.1 meters and 0.3 meters from the projected geometry of the EUT on the ground reference plane.

This report shall not be reproduced except in full, without the written approval of Compliance Certification Services.

8.7.5. TEST RESULTS

Temperature	21°C	Humidity	50% RH
Pressure	1009mbar	Tested By	Bonny Tsai
Required Passing Performance		Criterion A	

Frequency Band (MHz)	Field Strength (Vrms)	Cable	Injection Method	Performance Criterion	Observation	Result
0.15 ~ 80	3	DC Power Line (0.3m)	CDN-M2	☒A ☐B	Note ☒1 ☐2	PASS
2	10	DC Power Line (0.3m)	CDN-M2	☒A ☐B	Note ☒1 ☐2	PASS
3	10	DC Power Line (0.3m)	CDN-M2	☒A ☐B	Note ☒1 ☐2	PASS
4	10	DC Power Line (0.3m)	CDN-M2	☒A ☐B	Note ☒1 ☐2	PASS
6.2	10	DC Power Line (0.3m)	CDN-M2	☒A ☐B	Note ☒1 ☐2	PASS
8.2	10	DC Power Line (0.3m)	CDN-M2	☒A ☐B	Note ☒1 ☐2	PASS
12.6	10	DC Power Line (0.3m)	CDN-M2	☒A ☐B	Note ☒1 ☐2	PASS
16.5	10	DC Power Line (0.3m)	CDN-M2	☒A ☐B	Note ☒1 ☐2	PASS
18.8	10	DC Power Line (0.3m)	CDN-M2	☒A ☐B	Note ☒1 ☐2	PASS
22	10	DC Power Line (0.3m)	CDN-M2	☒A ☐B	Note ☒1 ☐2	PASS
25	10	DC Power Line (0.3m)	CDN-M2	☒A ☐B	Note ☒1 ☐2	PASS
0.15 ~ 80	3	All I/O Line (0.3m)	EM-Clamp	☒A ☐B	Note ☒1 ☐2	PASS
2	10	All I/O Line (0.3m)	EM-Clamp	☒A ☐B	Note ☒1 ☐2	PASS
3	10	All I/O Line (0.3m)	EM-Clamp	☒A ☐B	Note ☒1 ☐2	PASS
4	10	All I/O Line (0.3m)	EM-Clamp	☒A ☐B	Note ☒1 ☐2	PASS
6.2	10	All I/O Line (0.3m)	EM-Clamp	☒A ☐B	Note ☒1 ☐2	PASS
8.2	10	All I/O Line (0.3m)	EM-Clamp	☒A ☐B	Note ☒1 ☐2	PASS
12.6	10	All I/O Line (0.3m)	EM-Clamp	☒A ☐B	Note ☒1 ☐2	PASS
16.5	10	All I/O Line (0.3m)	EM-Clamp	☒A ☐B	Note ☒1 ☐2	PASS
18.8	10	All I/O Line (0.3m)	EM-Clamp	☒A ☐B	Note ☒1 ☐2	PASS
22	10	All I/O Line (0.3m)	EM-Clamp	☒A ☐B	Note ☒1 ☐2	PASS
25	10	All I/O Line (0.3m)	EM-Clamp	☒A ☐B	Note ☒1 ☐2	PASS

NOTE: 1. There was no degradation of performance or loss of function found on EUT during and after the test.

This report shall not be reproduced except in full, without the written approval of Compliance Certification Services.

8.8. POWER SUPPLY SHORT-TERM VARIATION TEST

8.8.1. TEST SPECIFICATION (Reference to EN 60945 clause 10.7)

Basic Standard:	IMMUNITY TO POWER SUPPLY SHORT-TERM VARIATION
Test duration time:	Minimum three test events in sequence
Interval between event:	1/10 min
Voltage and frequency variation rise and decay:	Voltage: nominal ± (20 ± 1) %, duration 1,5 s ± 0,2 s, Frequency: nominal ± (10 ± 0,5) %, duration 5 s ± 0,5 s, superimposed

8.8.2. TEST INSTRUMENT

Immunity shielded room				
Name of Equipment	**Manufacturer**	**Model**	**Serial Number**	**Calibration Due**

NOTE: 1. The calibration interval of the above test instruments is 12 months and the calibrations are traceable to NML/ROC and NIST/USA.
2. N.C.R.= No Calibration required

8.8.3. TEST PROCEDURE (please refer to measurement standard or CCS SOP PA-028)

1. The EUT and support units were located on a wooden table, 0.8 m away from ground floor.
2. Setting the parameter of tests and then perform the test software of test simulator.
3. Recording the test result in test record form.

This report shall not be reproduced except in full, without the written approval of Compliance Certification Services.

8.8.4. TEST SETUP

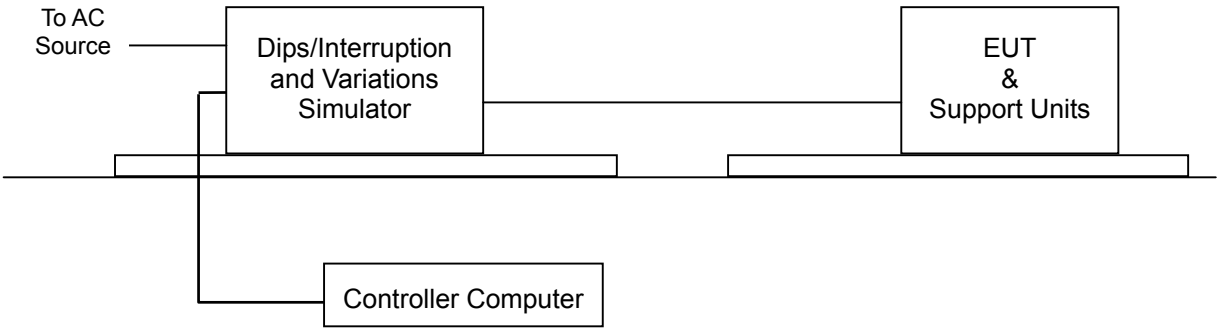

- For the actual test configuration, please refer to the related item – Photographs of the Test Configuration.

8.8.5. TEST RESULTS

Temperature	N/A	**Humidity**	N/A
Pressure	N/A	**Tested By**	N/A
Required Passing Performance		**Criterion B**	

Test Power: 230Vac, 50Hz				
POWER	**Duration (Sec)**	**Performance Criterion**	**Observation**	**Test Result**
276/55	1.5/5	☐A ☐B ☐C	**Note** ☒1 ☐2 ☐3	N/A
184/45	1.5/5	☐A ☐B ☐C	**Note** ☒1 ☐2 ☐3	N/A

NOTE: 1. The subject equipment is not intended to be connected to AC mains supply. Therefore, this test is not applicable.

This report shall not be reproduced except in full, without the written approval of Compliance Certification Services.

8.9. POWER SUPPLY FAILURE TEST

8.9.1. TEST SPECIFICATION (Reference to EN 60945 clause 10.8)

Basic Standard:	IMMUNITY TO POWER SUPPLY FAILURE
Test duration time:	60 Sec
Requirement:	3 TIMES

8.9.2. TEST INSTRUMENT

Immunity shielded room				
Name of Equipment	**Manufacturer**	**Model**	**Serial Number**	**Calibration Due**
EMC Immunity Tester	EMC Partner	TRANSIENT 2000	1117	03/10/2017
AC/DC Clamp Meter	Lutron	CM-9930R	I.200121	05/26/2016
Satellite Simulator	HJC	GPS-101	EN001	No Cal. Required
Software	Genecs Ver. 3.27			

NOTE: 1. The calibration interval of the above test instruments is 12 months and the calibrations are traceable to NML/ROC and NIST/USA.
2. N.C.R.= No Calibration required

8.9.3. TEST PROCEDURE (please refer to measurement standard or CCS SOP PA-028)

1. The EUT and support units were located on a wooden table, 0.1 m away from ground floor.
2. Setting the parameter of tests and then perform the test software of test simulator.
3. Conditions changes to occur at 0 degree crossover point of the voltage waveform.
4. Recording the test result in test record form.

This report shall not be reproduced except in full, without the written approval of Compliance Certification Services.

8.9.4. TEST SETUP

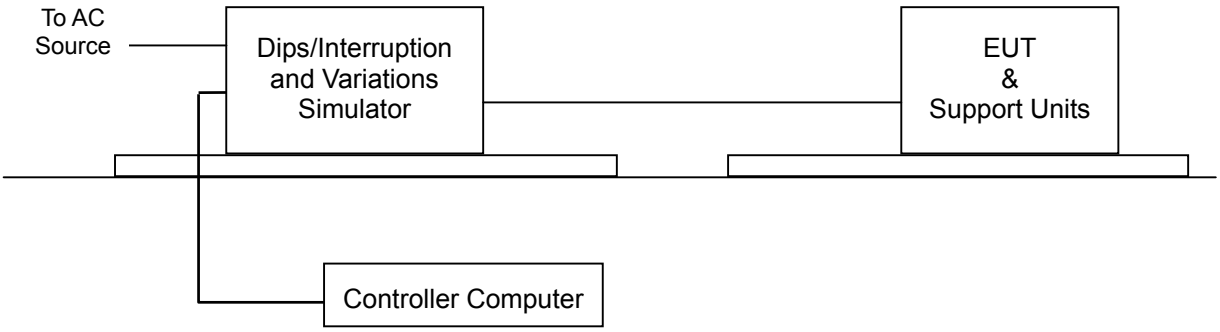

- For the actual test configuration, please refer to the related item – Photographs of the Test Configuration.

8.9.5. TEST RESULTS

Temperature	20°C	**Humidity**	59% RH
Pressure	1010mbar	**Tested By**	Bonny Tsai
Required Passing Performance		**Criterion C**	

Test Power: 230Vac, 50Hz				
Voltage (% Reduction)	**Duration (Sec)**	**Performance Criterion**	**Observation**	**Test Result**
100	60	☐A ☐B ☒C	**Note** ☒1 ☐2 ☐3	PASS

NOTE: 1. During power supply failure tests, EUT operates automatically and normally each time after power is restored.

This report shall not be reproduced except in full, without the written approval of Compliance Certification Services.

9 PHOTOGRAPHS OF THE TEST CONFIGURATION

CONDUCTED EMISSION TEST

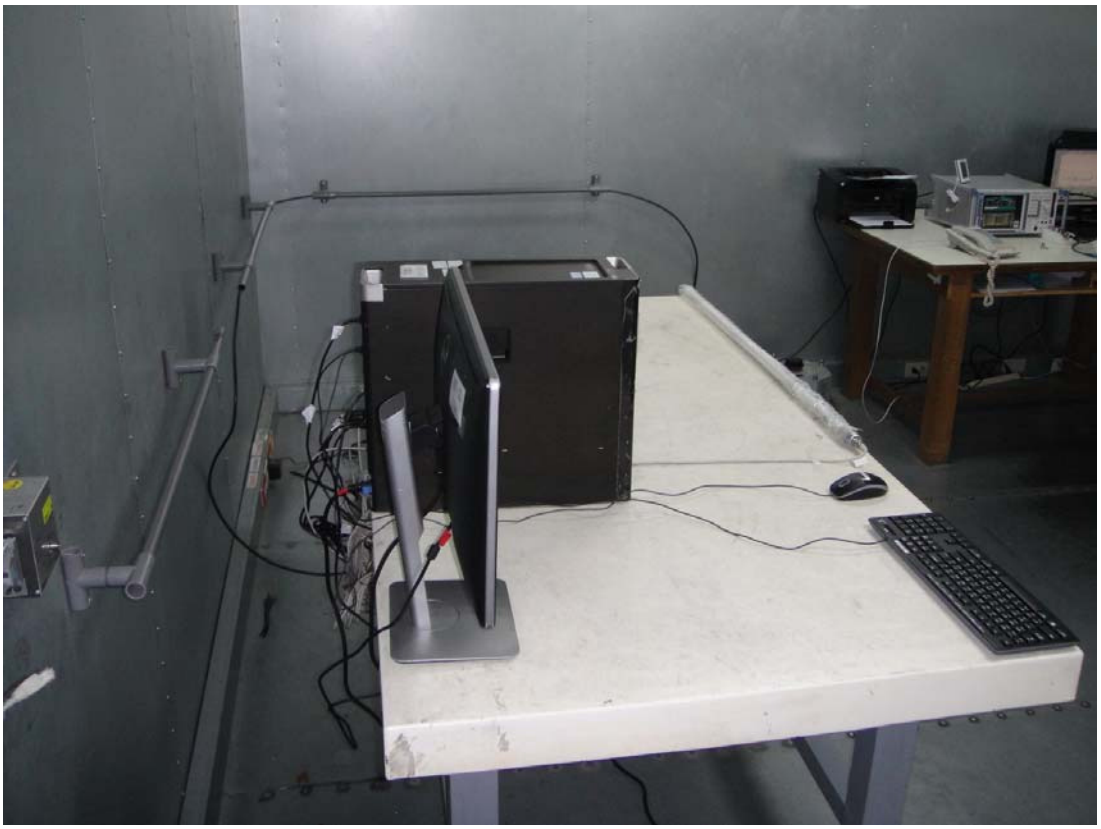

This report shall not be reproduced except in full, without the written approval of Compliance Certification Services.

RADIATED EMISSION TEST

150kHz ~ 30MHz

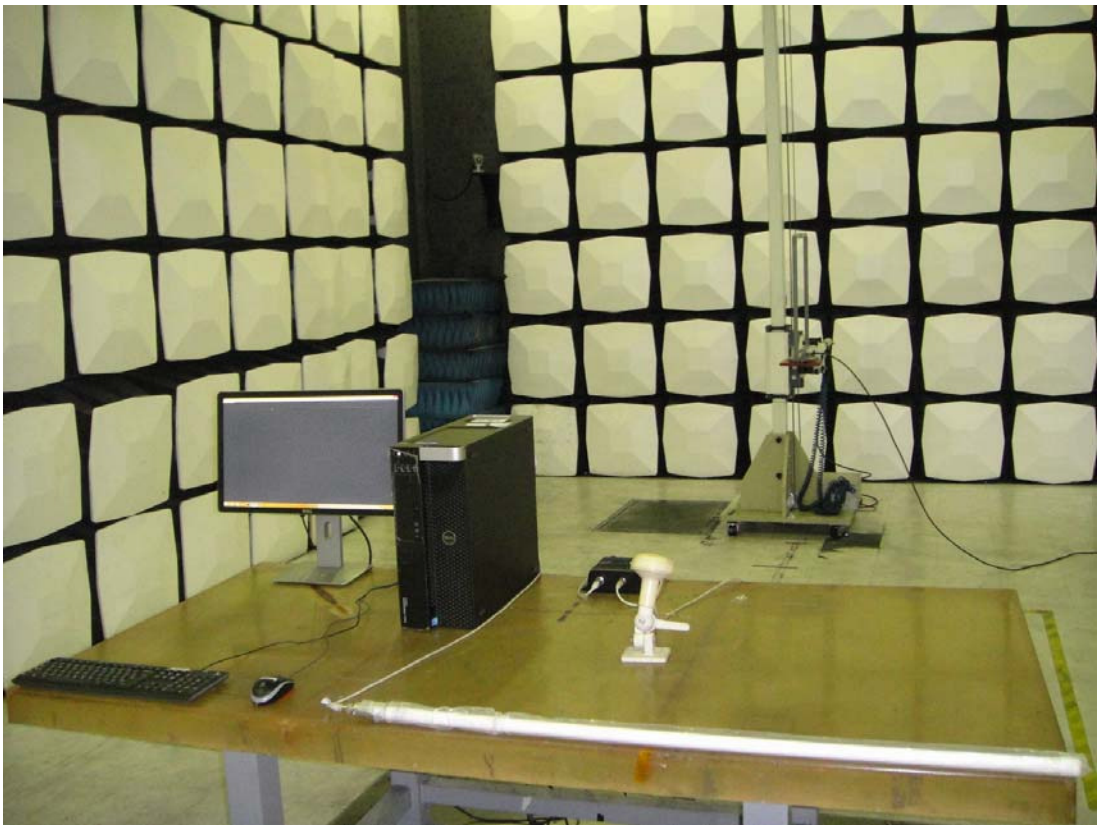

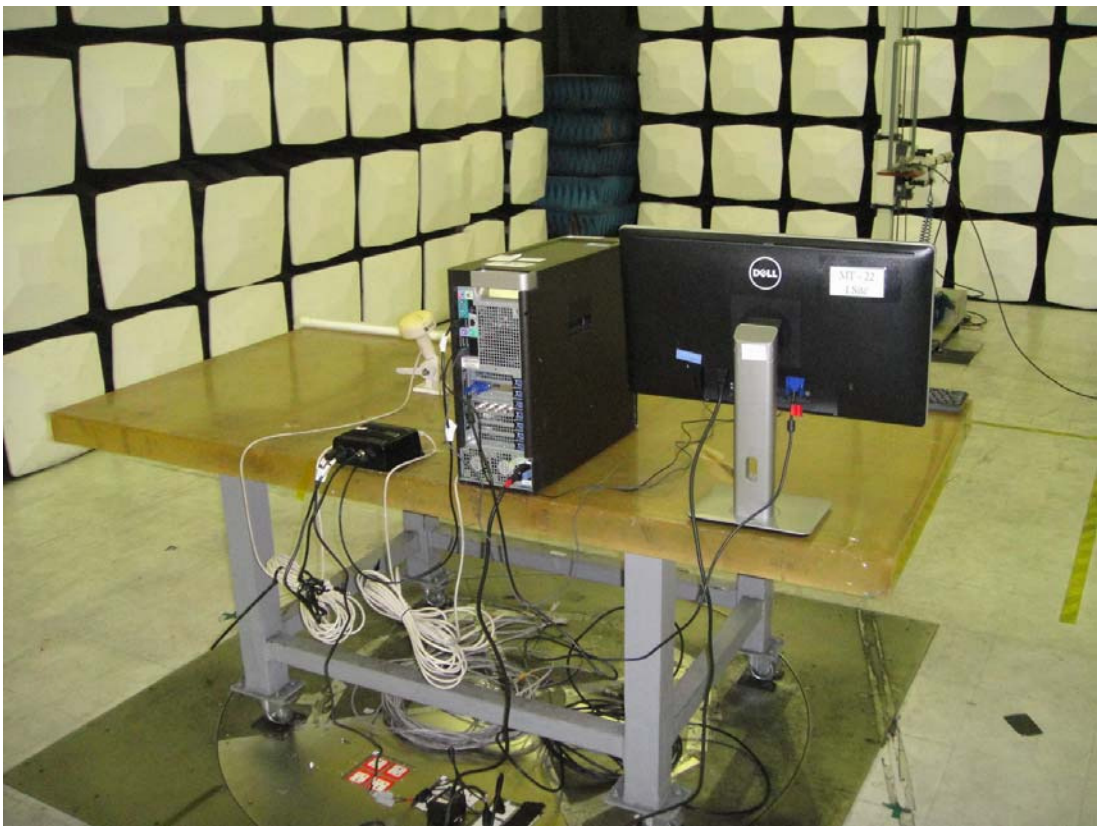

This report shall not be reproduced except in full, without the written approval of Compliance Certification Services.

30MHz ~ 1GHz

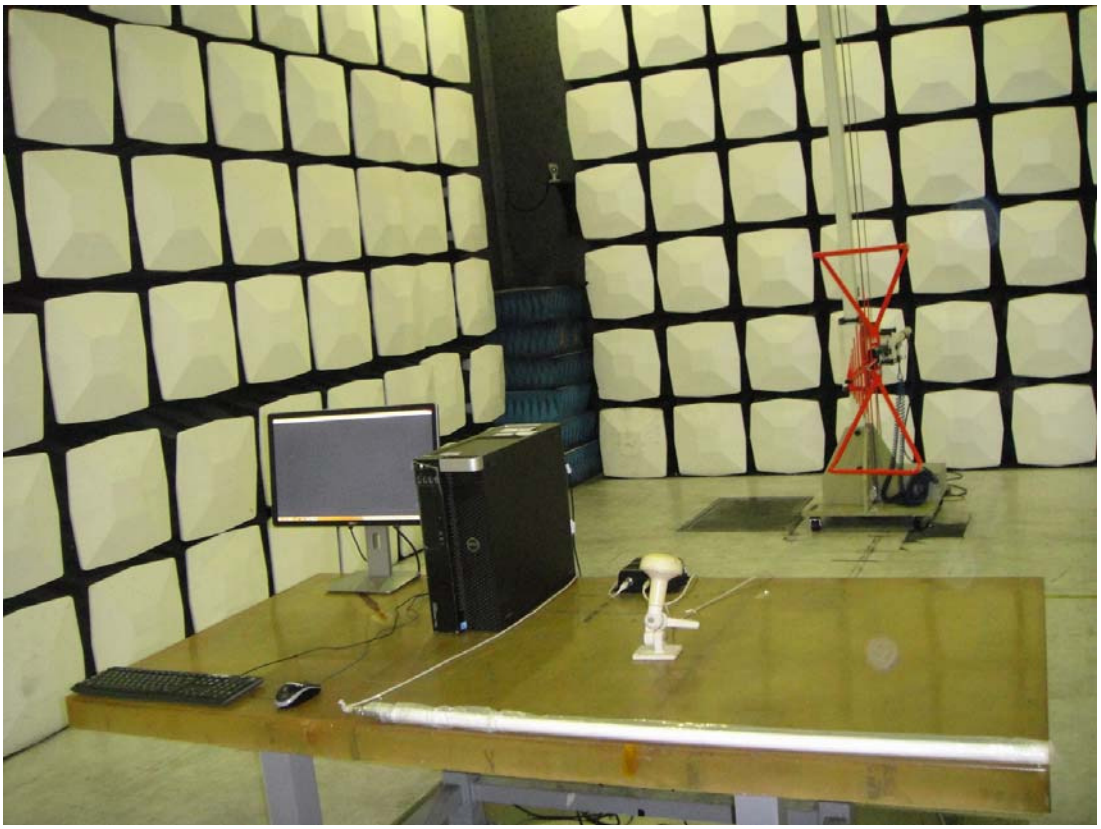

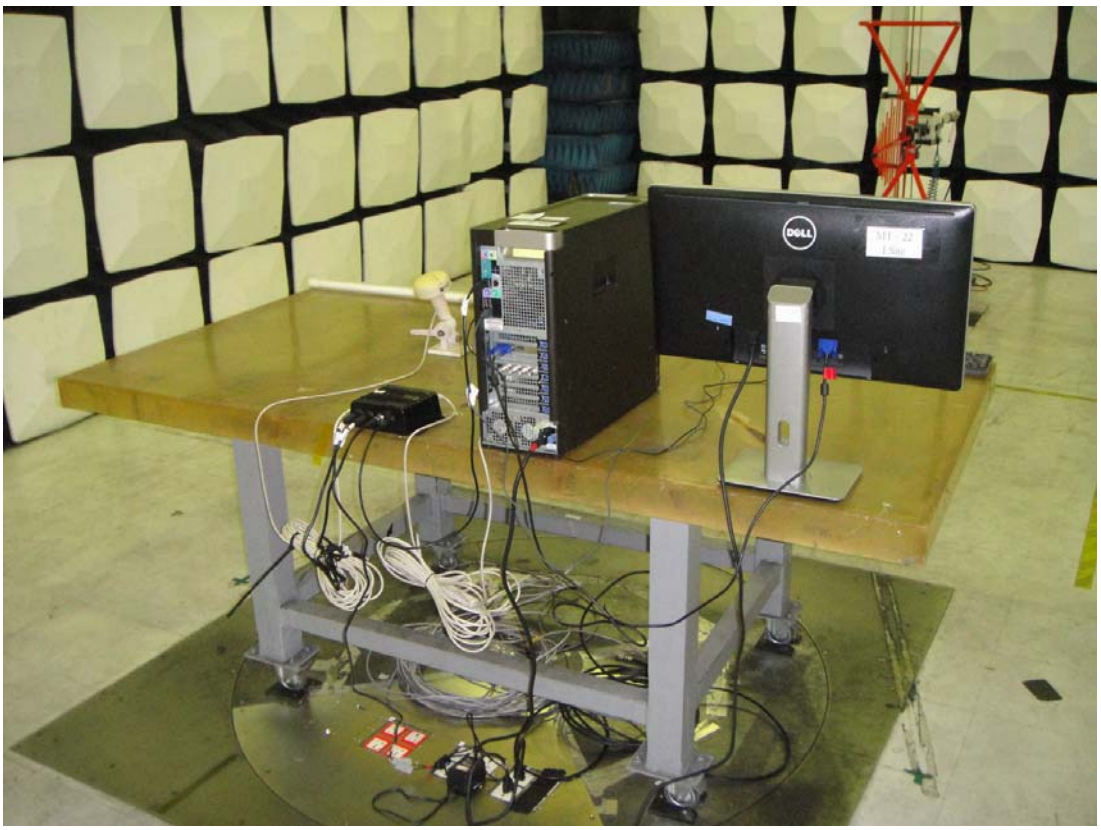

This report shall not be reproduced except in full, without the written approval of Compliance Certification Services.

1GHz ~ 2GHz

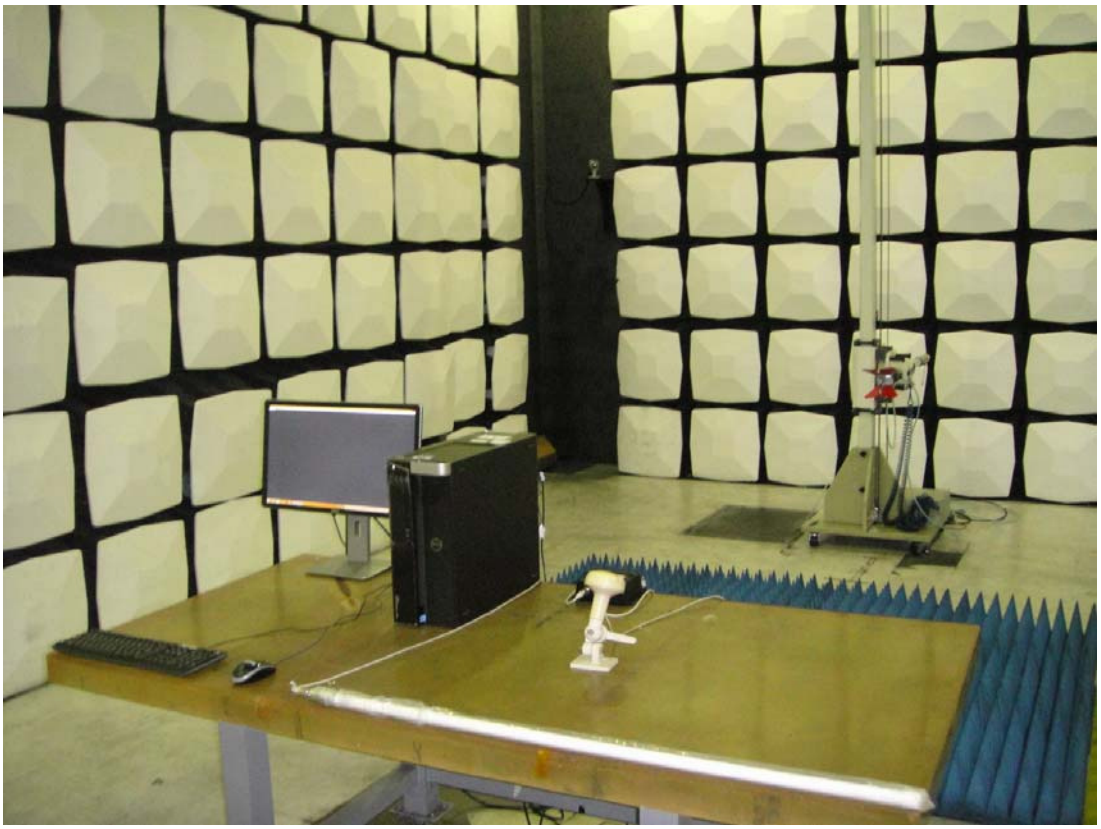

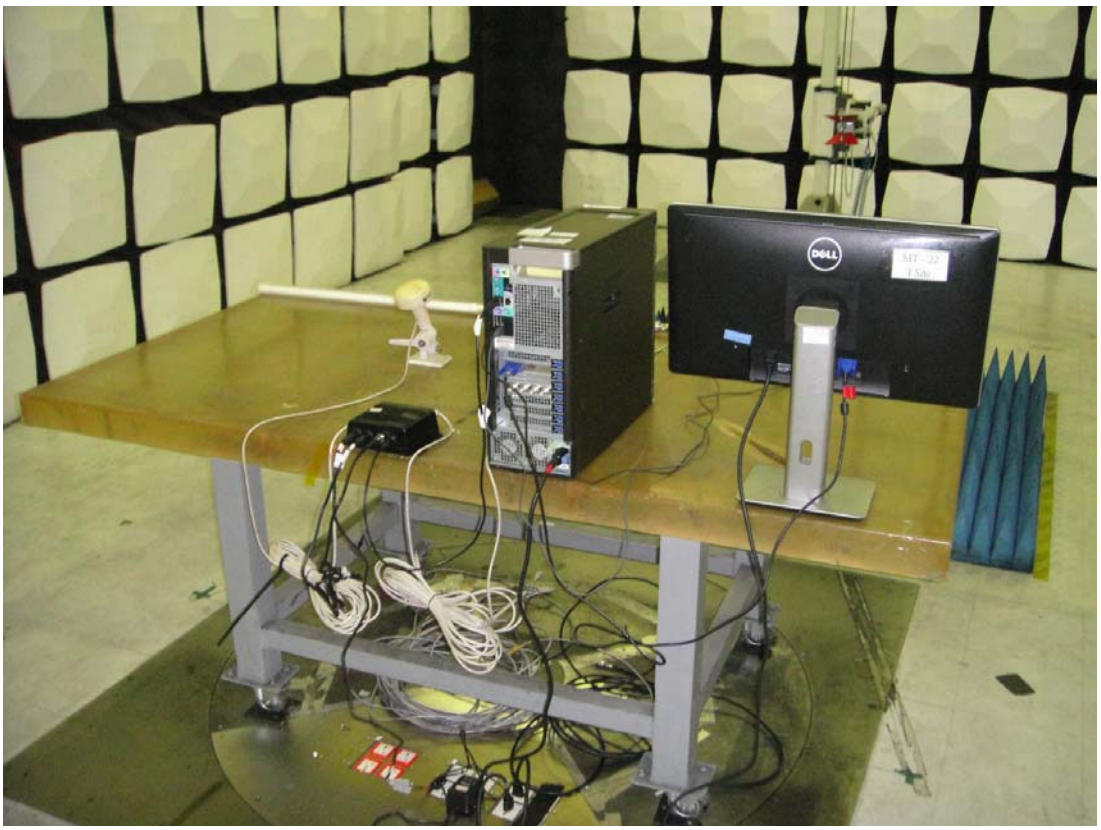

This report shall not be reproduced except in full, without the written approval of Compliance Certification Services.

ESD Test

RS Test

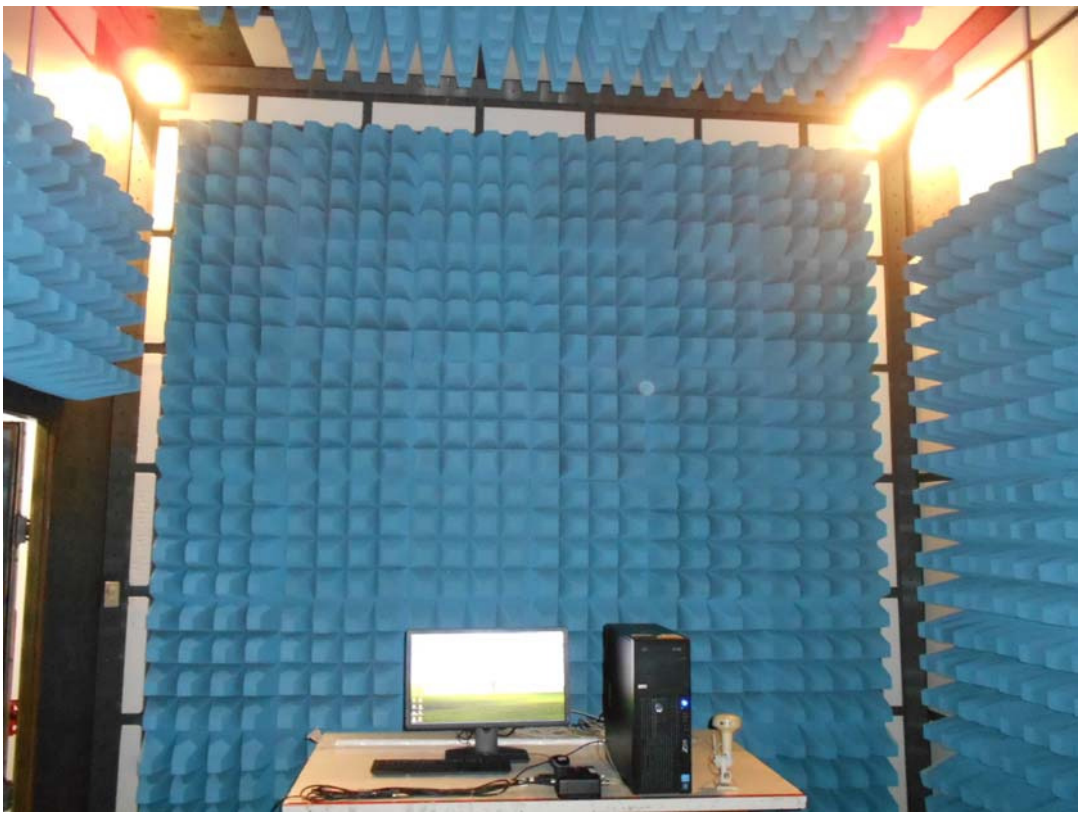

This report shall not be reproduced except in full, without the written approval of Compliance Certification Services.

EFT For I/O Test

CS Test

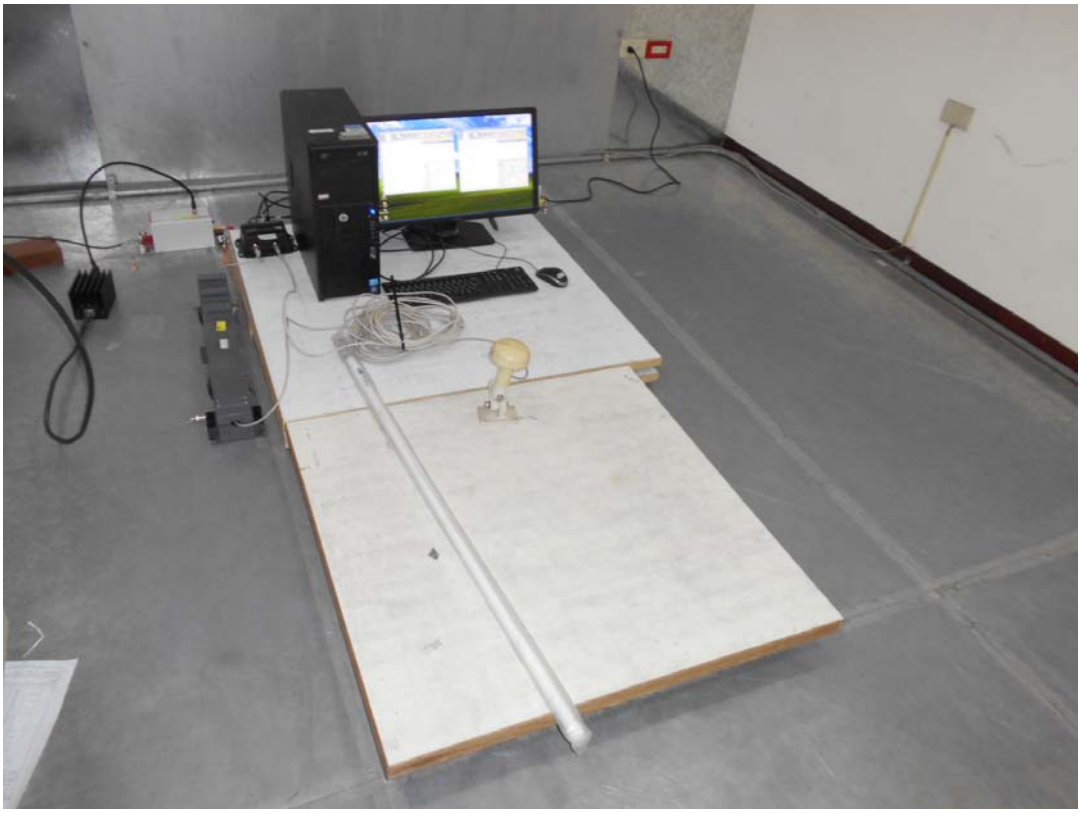

This report shall not be reproduced except in full, without the written approval of Compliance Certification Services.

CS For I/O Test

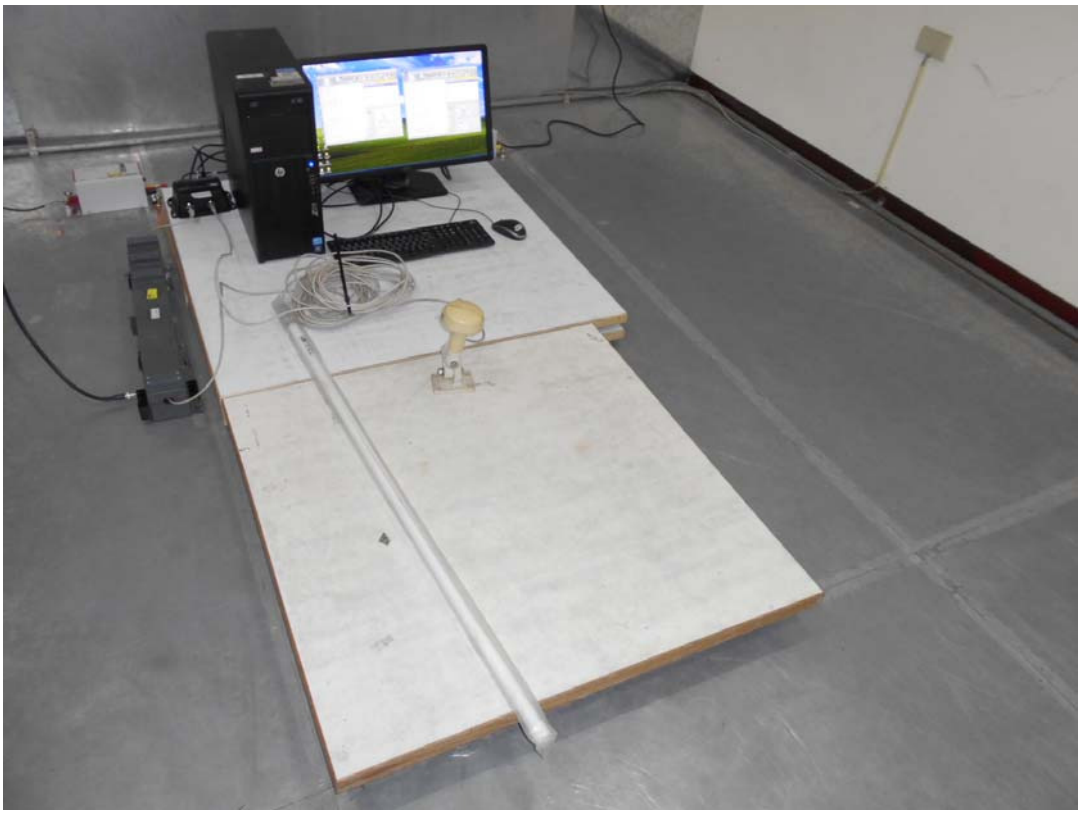

POWER SUPPLY FAILURE TEST

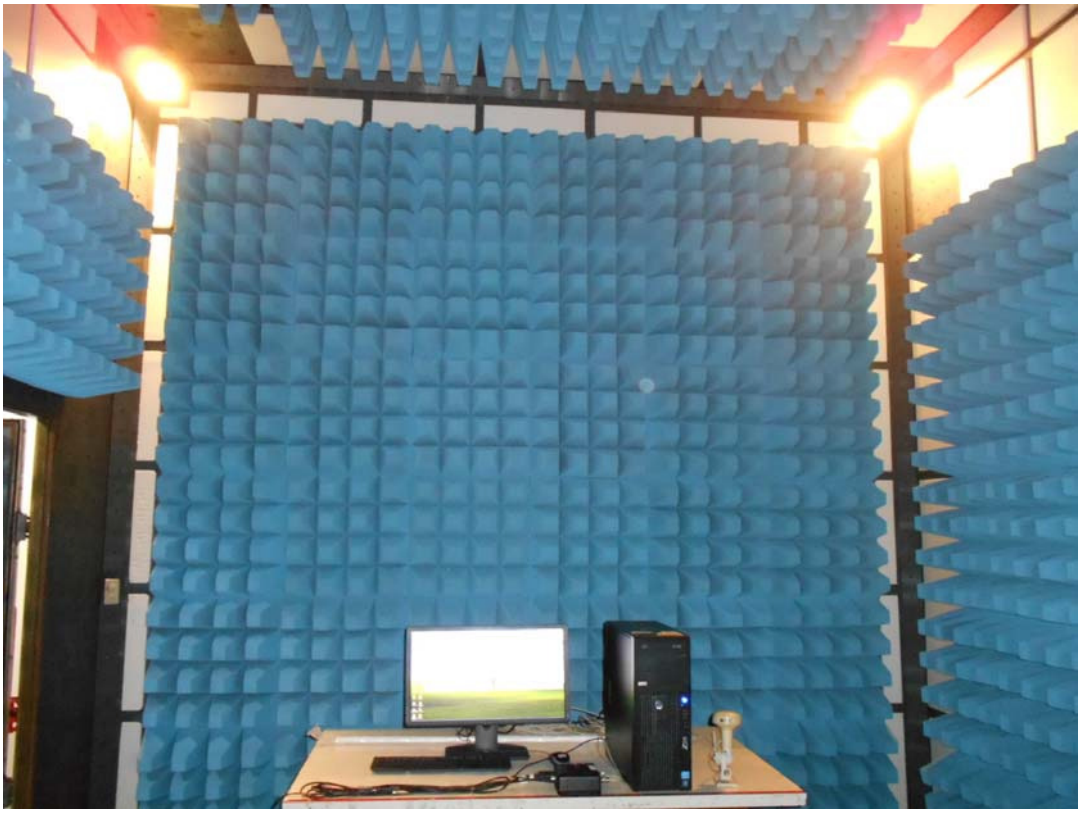

This report shall not be reproduced except in full, without the written approval of Compliance Certification Services.

10 METHOD AND SCREENSHOTS OF EUT'S TRANSMITTING/RECEIVING PERFORMANCE CHECK

Screenshot of ESD:

On the screenshot below, the transmitting packet quantity (of the additional AIS transponder) is marked by "Tx-packet" which is 435 on the screenshot. The receiving packet quantity of the EUT is marked by "Rx-packet" which is 430 on the screenshot. So the PER (packet error rate) of the EUT receiving performance under this test is 0.23%.

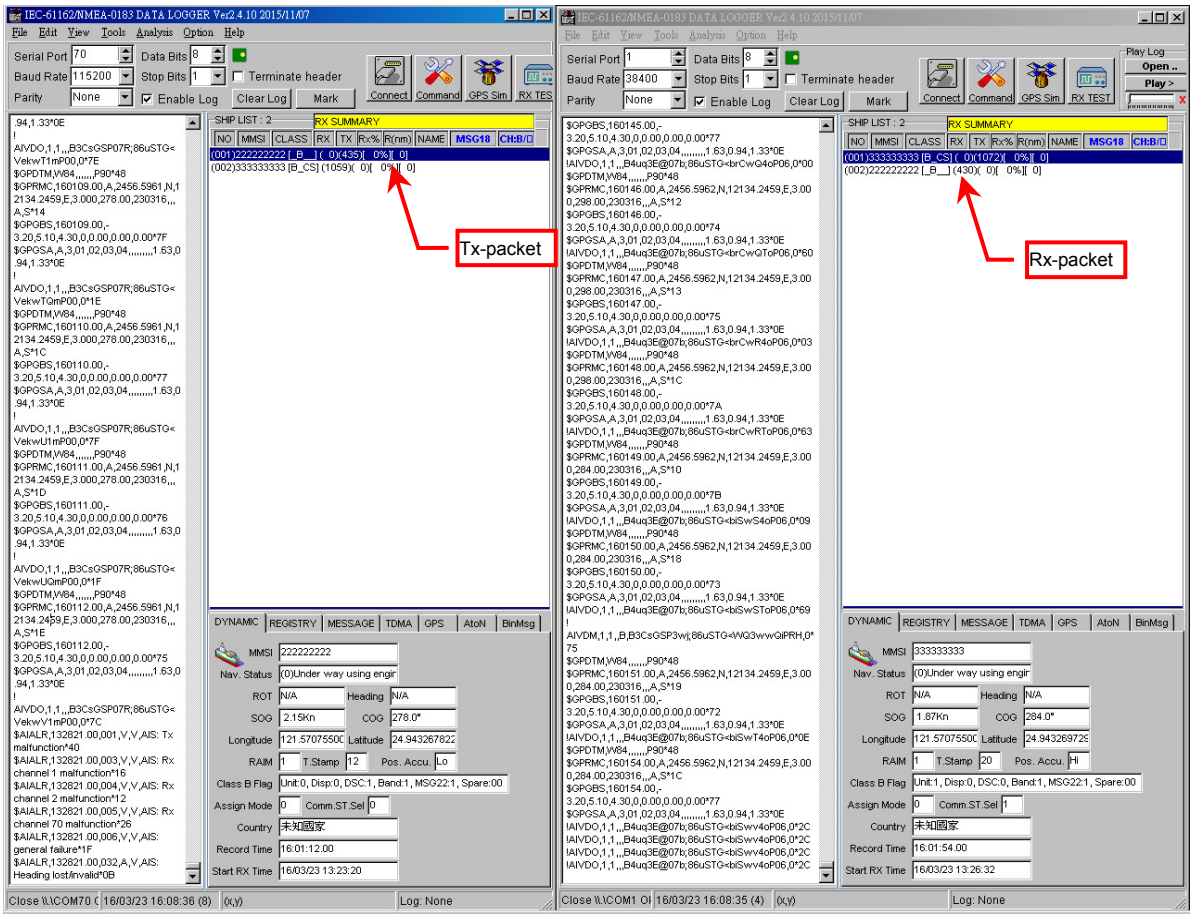

This report shall not be reproduced except in full, without the written approval of Compliance Certification Services.

Screenshot of RS:

On the screenshot below, the transmitting packet quantity (of the additional AIS transponder) is marked by “Tx-packet” which is 5462 on the screenshot. The receiving packet quantity of the EUT is marked by “Rx-packet” which is 5445 on the screenshot. So the PER (packet error rate) of the EUT receiving performance under this test is 0.24%.

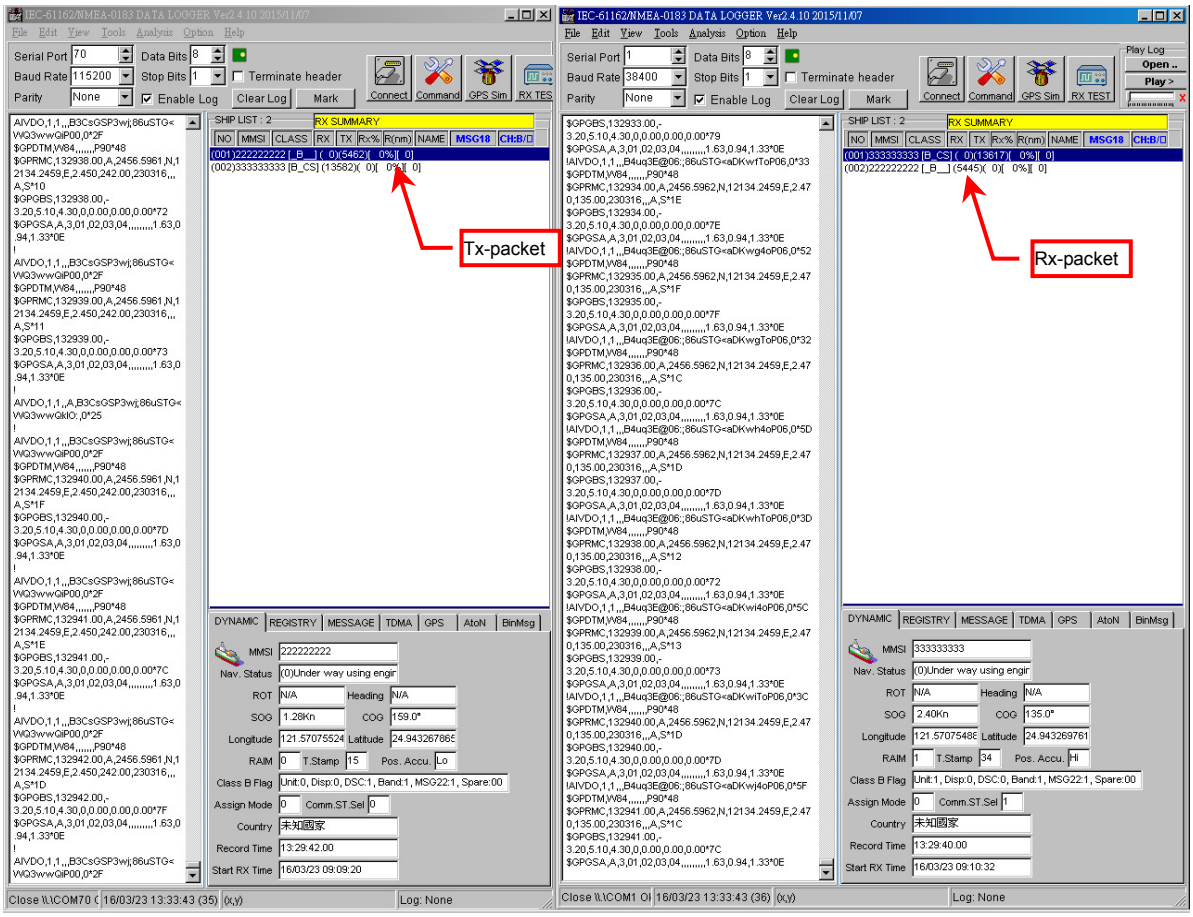

This report shall not be reproduced except in full, without the written approval of Compliance Certification Services.

Screenshot of EFT:

On the screenshot below, the transmitting packet quantity (of the additional AIS transponder) is marked by “Tx-packet” which is 1398 on the screenshot. The receiving packet quantity of the EUT is marked by “Rx-packet” which is 1381 on the screenshot. So the PER (packet error rate) of the EUT receiving performance under this test is 0.14%.

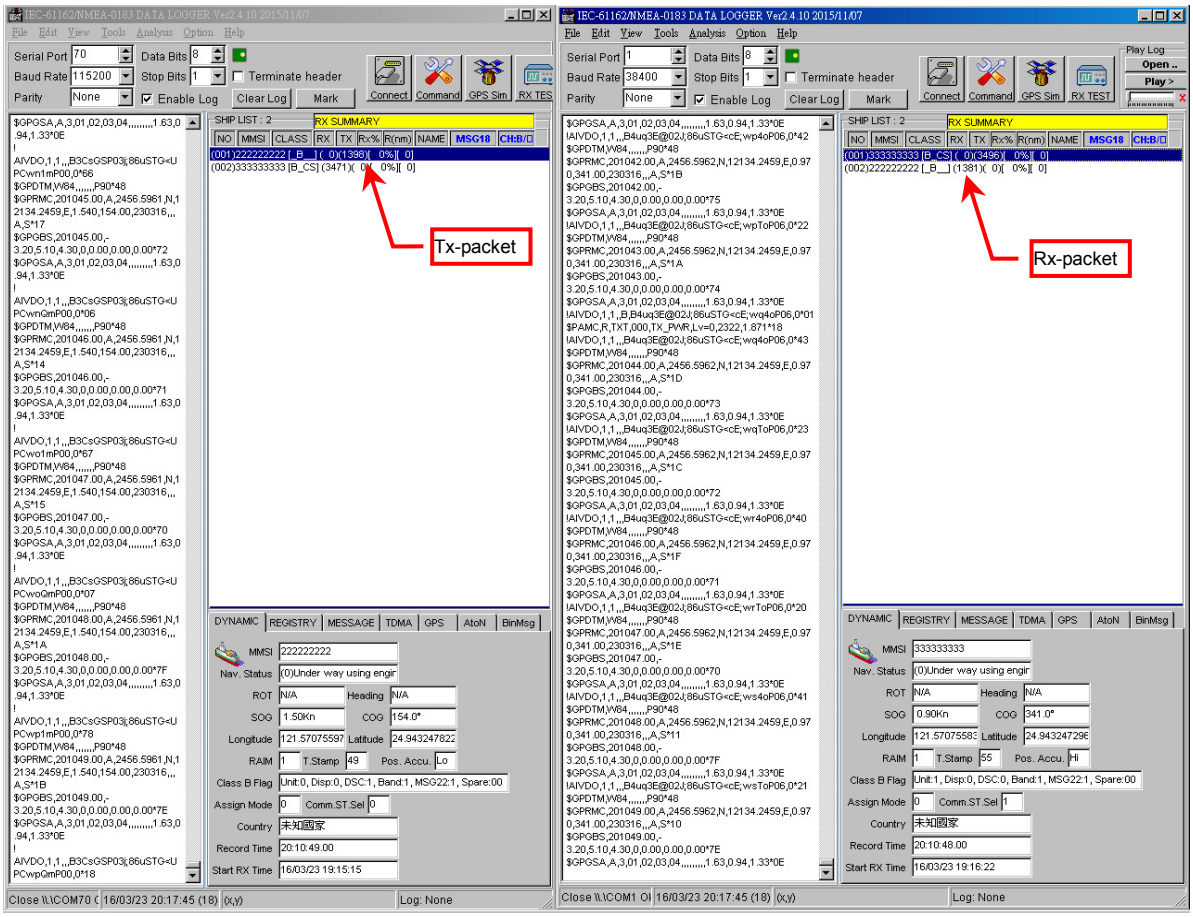

This report shall not be reproduced except in full, without the written approval of Compliance Certification Services.

Screenshot of CS:

On the screenshot below, the transmitting packet quantity (of the additional AIS transponder) is marked by “Tx-packet” which is 1373 on the screenshot. The receiving packet quantity of the EUT is marked by “Rx-packet” which is 1362 on the screenshot. So the PER (packet error rate) of the EUT receiving performance under this test is 0.37%.

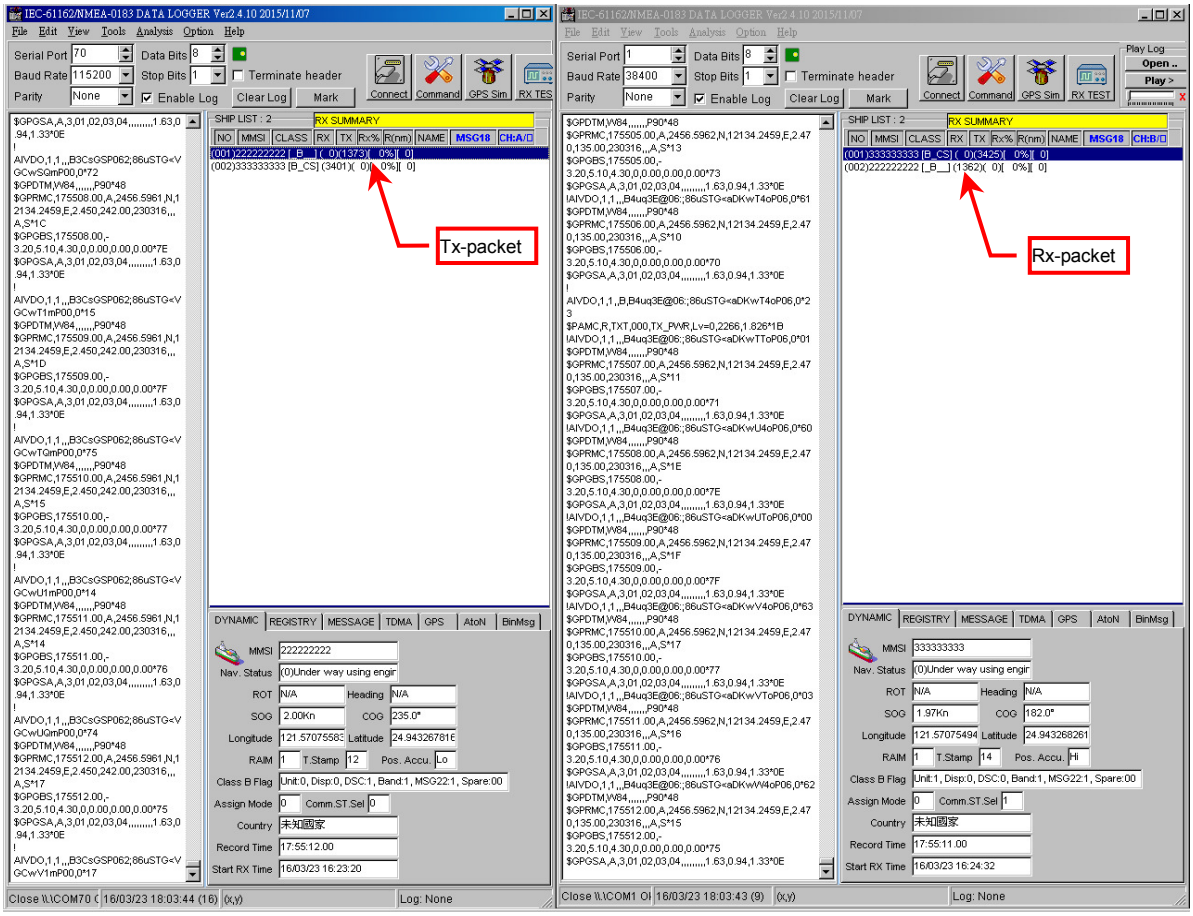

This report shall not be reproduced except in full, without the written approval of Compliance Certification Services.

Screenshot of Power supply failure:

On the screenshot below, the transmitting packet quantity (of the additional AIS transponder) is marked by “Tx-packet” which is 9 on the screenshot. The receiving packet quantity of the EUT is marked by “Rx-packet” which is 48 on the screenshot. So the PER (packet error rate) of the EUT receiving performance under this test is 0.23%.

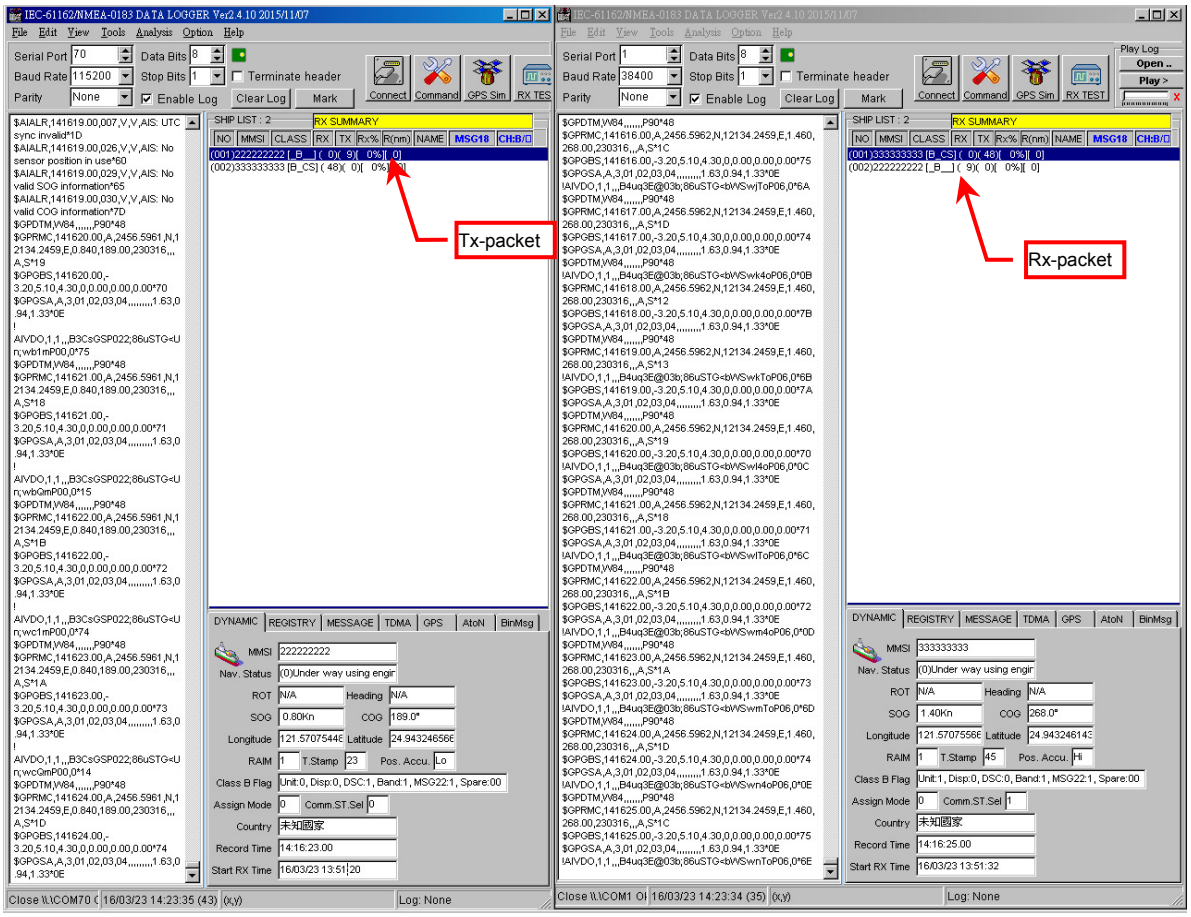

This report shall not be reproduced except in full, without the written approval of Compliance Certification Services.