Axon Body 4 Camera User Manual

Models AX1037 AX1038
Document Revision: A
June 2023

App Store is a trademark of Apple, Inc. registered in the US and other countries. iOS is a trademark of Cisco Technology, Inc., Play Store and Android are trademarks of Google, Inc.

, AXON, Axon, Axon Body 4, Axon Commander, Axon Device Manager, Axon Evidence, Axon Signal, Axon View, and Axon View XL are trademarks of Axon Enterprise, Inc., some of which are registered in the US and other countries. For more information, visit www.axon.com/legal.

All rights reserved. ©2023 Axon Enterprise, Inc.

Table of Contents

Introduction **5**
Important Safety and Health Information 5
Additional Reading 5
Getting Started 6
Axon Body 4 Camera Registration with Axon Device Manager 6
Getting to Know Your Axon Body 4 Camera **11**
POV Module 15
Accessories and Mounts 16
Operating the Axon Body 4 Camera **17**
Operating Modes 17
Turning on the Camera and Ready (Buffering) Mode 17
Starting Recording (Event) Mode 18
Muting Audio Recording 18
Adding Markers while Recording 19
Lighting the Camera Display 19
Battery Status 19
Sleep Mode 19
Entering and Exiting Sleep Mode 20
Configuring Your Camera 21
Adjusting Audio Prompt Volume 21
Turning On or Off Camera Lights 21
Setting Camera Automatic LED Brightness 22
Turning Camera Vibrations On or Off 23
Stealth Mode 24
Other Settings and Functionality 25
Using Axon View 25
Pairing Your Axon Body 4 Camera with a Smart Device 25
Axon Signal 26
Axon View XL Standalone Mode 26
Button, Notification, and Display Reference Tables **28**

Button Actions 28
Camera Display 29
Notifications 30
LED Status 31
Operation LED 31
Triad LED (in the field) 31
Triad LED (in an Axon Dock) 31
Care and Maintenance 32
Cleaning the Camera 32
Charging the Battery 32
Charging an Axon Body 4 Camera while Powered Off 33
Camera Internal Clock 34
Wet Axon Body 4 Cameras 34
Camera Storage 34
Troubleshooting and Other Information 34
Viewing Camera Information on the Camera Display 35
Technical Support 35
Warranty Policy 35
Warnings 36
Radio Waves 36
Declaration of Conformity 38
Compliance Marks 39

Introduction

The Axon Body 4 is a camera system incorporating audio and video recording devices. This camera is designed for use in tough environmental conditions encountered in law enforcement, corrections, military, and security activities. The Axon Body 4 camera is designed to record events for secure storage, retrieval, and analysis to the Axon Evidence or Axon Commander services. The recorded events are transferred to your storage solution using the Axon Body 4 Dock. Axon Body 4 is also equipped with live streaming and geolocation capabilities for real-time monitoring in the field. Additionally, the Axon View application enables playback of footage on a smart device for review prior to storing the data.

The Axon Body 4 camera has 2 operating modes: Ready mode and Recording mode. The Ready, or Buffering, mode provides pre-event buffering to capture activities that occur prior to the user activating the Recording, or Event, mode.

Note: The Axon Body 4 camera does not support offline mode and is not compatible with Evidence Sync.

Important Safety and Health Information

Read, understand, and follow all warnings and instructions before using this product. The most up-to-date warnings and instructions are available at www.axon.com.

Additional Reading

This manual explains how to operate the Axon Body 4 camera hardware. Other manuals cover additional aspects of the Axon Body 4 system. These documents are available at help.axon.com.

For information on working with uploaded videos and managing Axon Body 4 cameras, including inventory management and agency-wide settings, see the *Axon Evidence User and Administrator Reference Guide*.

For information on installing and setting up Axon Body 4 Docks to transfer information and recharge your camera, see the *Axon Body 4 Dock Installation Manual*.

For instructions on using Axon cameras with a smart device, see the *Axon View for Android Devices User Manual* or the *Axon View for iOS Devices User Manual*.

The Axon Academy website explains how to register for and use the Axon Evidence (Evidence.com) website, configure settings, install Evidence Sync software, assign personnel to cameras, recharge your camera, and transfer video from an Axon device to a computer. Visit academy.axon.com.

Getting Started

Axon Body 4 cameras must be registered by your agency before they can be assigned to users. Additionally, it is recommended that you adjust the agency-wide Axon Body 4 Camera Settings in Axon Evidence before assigning cameras to users.

Axon Body 4 Camera Registration with Axon Device Manager

This section provides information about the out-of-the-box registration process for Axon Body 4 cameras. Camera registration requires the use of Axon Device Manager (ADM) and an Axon Body 4 Dock.

Prerequisites: In addition to an Axon Body 4 camera, registration requires:

- Axon Device Manager (ADM) installed on an appropriate device - If you already have ADM installed, ensure you have v3.0.3 (Android) or v2.0.3 (iOS) or higher.

  Note: You must have device management permissions to use ADM. If you aren't sure if you have permissions to use ADM, contact an Axon Evidence administrator for your agency to check on your permissions.

- An Axon Body 4 Dock connected to power and the Internet (green LED visible on the WAN port). See the *Axon Body 4 Dock Installation Manual* for information on installing a dock.

Before starting, Axon recommends that you familiarize yourself with the camera buttons by reviewing the information in the Getting to Know Your Axon Body 4 Camera section.

You can register multiple cameras, up to 100, at once if you have an Axon Dock bay for each camera. You must keep your mobile device with ADM within 30 feet of all the cameras you are registering.

1. Un-box the Axon Body 4 camera. Power on the camera by pressing the **Power** button, on top of the camera, until you feel a short vibration.

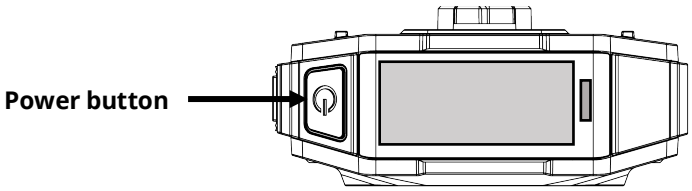

The camera starts and the camera display, on top of the camera, shows **DOCK DEVICE** or **DOCK DEVICE OR CONNECT VIEWXL.**

2. Place the camera in the Axon Body 4 Dock.

The camera display shows Register Device, the Operation and Triad LEDs are solid blue.

3. Open ADM and tap the Settings icon (☰) in the upper left.

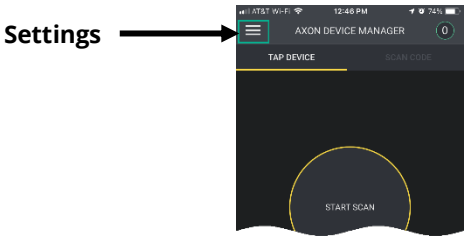

4. Under the Registration heading, tap **Devices** and then tap **Axon Body 4**.

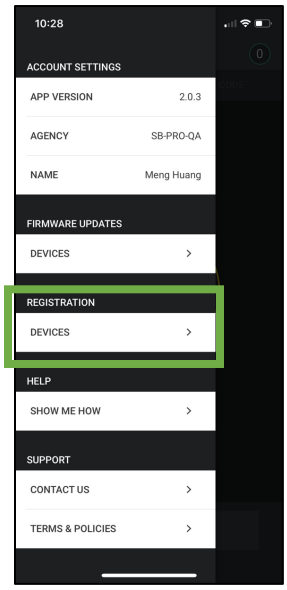

5. Review the device registration setup and tap **Next** to move to the next screen. Tap **Start Scan** when you are ready to start the registration process.

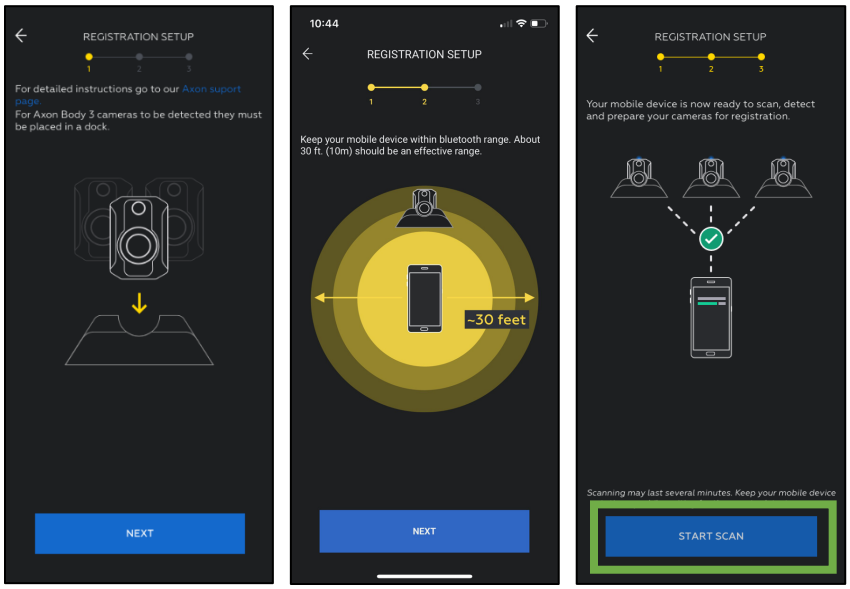

6. ADM detects and prepares unregistered cameras. The number of detected and prepared cameras appears at the top of the ADM screen.

   - When a camera is prepared, the Operation and Triad LEDs blink green.
   - Go to the camera and press the **Select** button (located between the volume buttons). You must confirm the registration by pressing the **Select** button.

- If successful, the display will change to show **NOT ASSIGNED** to indicate the camera is ready to be assigned to a user.

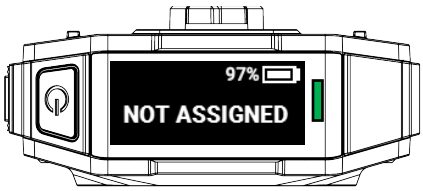

7. When you have registered all the detected cameras, tap **Finish**. ADM shows a list of camera serial numbers that have been registered at your agency during this session.

   Cameras that are successfully registered can be charged and assigned to users.

Troubleshooting

If there is a problem with preparing the camera, ADM will show an error.

Tap **Errors** to review the error information on ADM and refer to the following instructions to resolve the issue.

If you are unable to register ANY cameras, this may be due to a connectivity issue. Please reference the Axon Network Whitelisting Guide to ensure that the appropriate networks ports are open.

If SOME cameras are registering but others are not, this may be a transient error. Android devices tend to experience more transient errors than iOS devices. A suggested general troubleshooting approach is to:

1. Start with only one camera docked at a time.
2. Attempt to register. If a registration error occurs, tap **Dismiss All** to allow ADM to retry registration.
3. If registration fails again, power off the camera and then power it on and repeat the registration process.

The following table provides information about the error codes and suggested actions.

Error Code	Description	Troubleshooting Action
-1	Communication to the camera has failed	Power the camera off, then power the camera back on and retry registration. If attempting to register a large number of cameras in close proximity and you see this error, retry registration with individual cameras. If the error occurs again, tap **Dismiss All** and allow ADM to retry registration.
33, -7249973, 43, or 49	Camera time is inaccurate	Sign out and back in to ADM. Power the camera off, then power the camera back on, and allow the camera to remain docked for 2 minutes to allow sufficient time to synchronize the camera time. Confirm your agency network settings allow network communication from dock to Axon Evidence through port 80 and port 443. For more information, see Managing Network Whitelisting with Axon Cloud Services.
45 or 47	Camera unable to reach internet	Power the camera off, then power the camera back on, and allow the camera to remain docked for 1 minute prior to retrying. It will take about 30 seconds to establish an internet connection. Tap **Dismiss All** and allow ADM to retry the registration. If the error persists after retrying to register several times, check the internet connection and troubleshoot the dock internet connection. Common connection issues include agency firewall settings.
46	Camera unable to reach your agency's Axon Evidence account	Sign out and back in to ADM. If you can sign in, retry registration. Otherwise, contact Axon Technical Support to see if there are any issues with Axon Evidence.
34, 48, or 50	Camera provisioning issue	Power the camera off, then power the camera back on, and retry registration. If the error persists, contact your Axon Evidence administrator to confirm that Device Management permission is enabled. If Device Management permission is enabled, please contact your Axon Representative or Axon Technical Support for assistance.

Getting to Know Your Axon Body 4 Camera

The Axon Body 4 camera includes physical controls to enable video and audio capture while providing visual, audible, and vibration notifications of the Axon Body 4 camera's state of operation.

The following images show the different components on the Axon Body 4 camera.

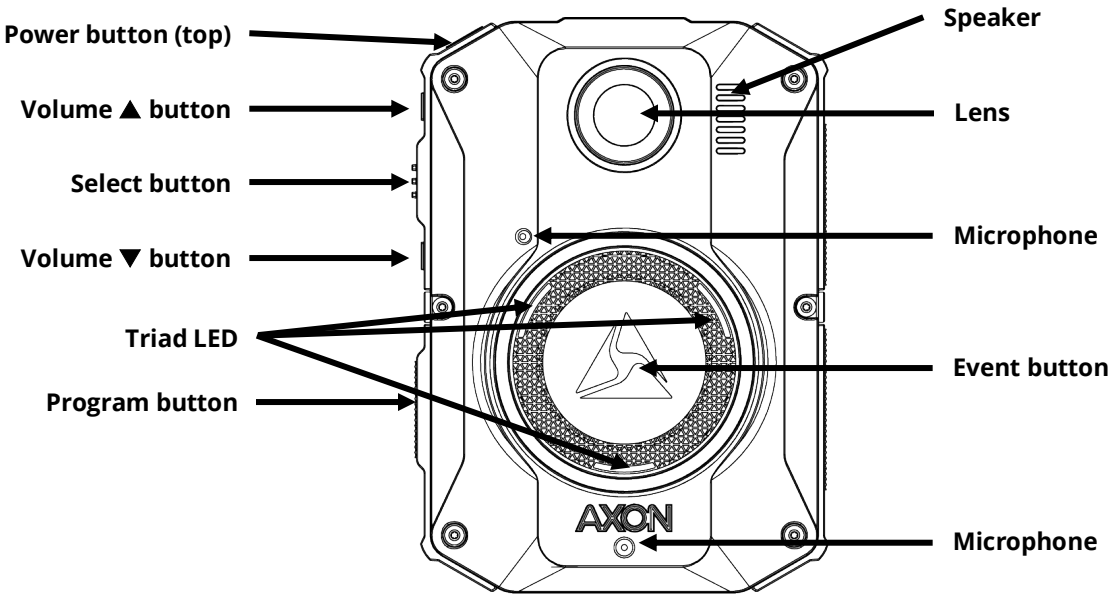

Axon Body 4 Camera front

Power button – Turns the camera's power on or off.

To power on the camera, press the Power button until you feel a short vibration. The camera starts, emits two short rising-pitch tones with a long vibration and then enters Ready (Buffering) mode.

To power off the camera, press and hold the Power button for 3 seconds. The camera emits three short lowering-pitch tones with a long vibration when powering off. The camera might take several additional seconds to close out of the video if it is powered off before stopping a recording.

Lens – The camera lens.

Speaker – Provides audio notifications.

Volume ▲ button – Used to increase speaker volume, turn off the camera lights, and exit stealth mode.

Select button – Used to mute audio recording, to add markers to the video during recording, and activate display backlight.

Volume ▼ button – Used to decreases speaker volume and enter or exit stealth mode.

Microphones – For recording audio.

Event button – Used to start and stop recording. Double-press to start recording. Press and hold for 3 seconds to stop recording and return to Ready (buffering) mode.

Triad LED – In the field, can show the camera's operating mode. In an Axon Dock, displays camera status and battery capacity.

In the field, the Triad LED on the front of the camera can be configured to display the camera's operating mode.

Operating Mode	Triad LED
Ready (Buffering)	Blinking green
Recording	Blinking red

In the Axon Dock, the Triad LED on the front of the camera shows the device status and battery capacity. See the camera display for additional information.

Device Status	Triad LED
Battery is fully charged (90% or more)	Solid green
Battery capacity is at mid-range (11% to 89%)	Solid yellow
Battery capacity is at low-range (10% or less)	Solid red
Uploading data, downloading data, or applying device settings	Spinning yellow (cycling yellow on each Triad LED)
Applying a firmware update	Spinning white (cycling white on each Triad LED)
Possible network error. Refer to Troubleshooting section of the Axon Body 4 User Manual or go to my.axon.com.	Blinking red and green
Device error. Refer to device page in Axon Evidence.	Blinking red

Program button – Used in conjunction with the Event button to activate pairing.

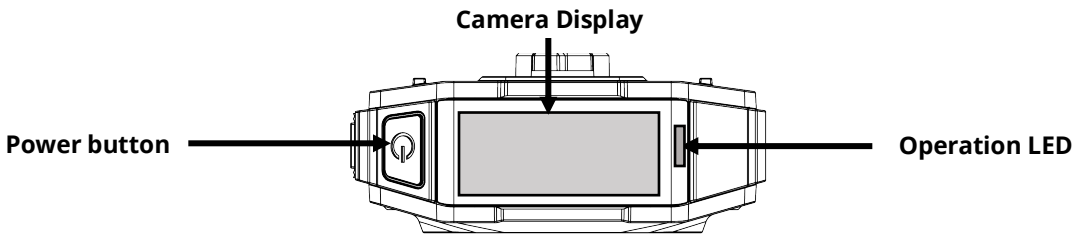

Axon Body 4 Camera top

Camera Display – Shows information on camera status and activity. Different information is shown when the Axon Body 4 camera is in the field and in an Axon Dock. Note that some icons may not be active or displayed at your agency. The display is divided into a Status Bar and Activity Area.

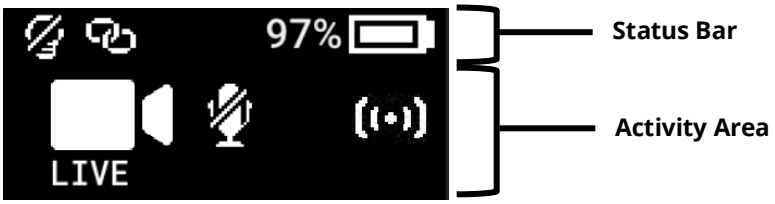

In the Field

Status Bar Icon	Description
58%	Battery capacity
	Camera paired
	Lights off
S	Stealth mode on
!	Battery low warning (to the right of the battery capacity icon)

Activity Area Icon	Description
READY	Ready (Buffering) mode
	Recording
	Recording started by Axon Signal broadcast
LIVE	Axon Respond Livestreaming
	Recording started by gunshot detection
	Microphone off (mute mode)

In an Axon Dock

Status Bar Icon	Description
58%	Battery capacity
	Charging (to the right of the battery capacity icon)
	Update in progress

Activity Area Icon	Description
UPLOADING	Upload in progress
UPDATING	Updating firmware or settings
NETWORK ERROR	Possible network error. Check network connection and refer to device profile page in Axon Evidence.
USERID123	Assigned officer ID (shown when no other activity is in progress)

Operation LED – Shows information about the camera's current operating mode.

Operating Mode	Operation LED
Recording	Blinking red
Ready (Buffering)	Blinking green
Booting up/powering down	Solid red
Mute enabled or Pairing mode	Blinking blue
Axon Respond Livestreaming*	Blinking purple
Low battery or error	Blinking yellow
In an Axon Dock with no other action	Battery capacity color
Firmware update (while in an Axon Dock)	Solid white

* May not be enabled at your agency.

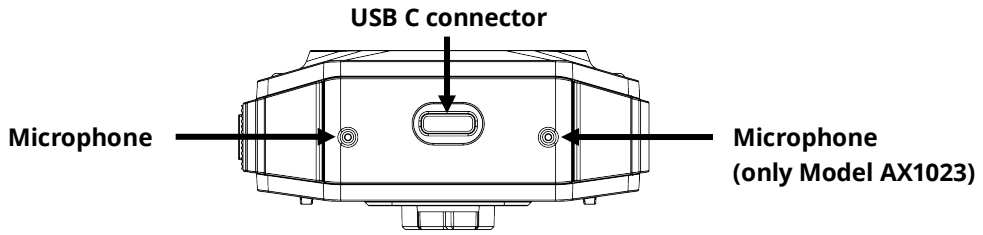

Axon Body 4 Camera bottom

USB C connector – Used for data transfer and charging when placed in an Axon Dock.

POV Module

The POV Module camera offers high-quality video and low-light capture from an officer's point of view.

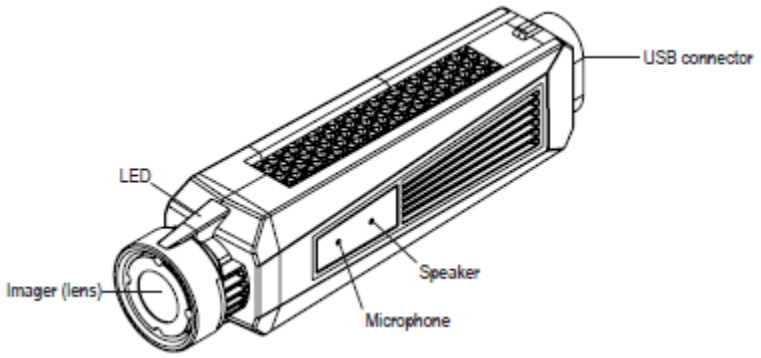

1. **Imager** – This is the camera lens. Avoid touching the lens.
2. **LEDs** – The LEDs will illuminate when the camera is in the dock to signify the status of uploads or firmware updates.
3. **USB Connector** – This feature on the back of the camera connects to a cable leading to the Axon Body 4 camera.
4. **Microphone** – Records ambient sound.
5. **Speaker** – Issues alerts in the form of beeps.

Straight-to-Right-Angle Cable

The POV Module and the Axon Body 4 are designed to work with a purpose-built cable, with a straight connector at one end and a right-angle connector at the other. Insert the straight connector into the POV Module and the right-angle connector into the Axon Body 4.

These cables are specifically calibrated to work with the Axon Body 4 system. Use of unapproved cables will degrade system performance and may cause the system to not function properly or at all.

Ensure that your cables are inserted properly into the POV Module and the Axon Body 4. If the camera's battery is low, or the cable is disconnected, your recorded video will be lost.

Accessories and Mounts

The Axon Body 4 camera is designed to work with a variety of Axon mounting systems.

Note: As with any Radio Frequency or electronic device, Axon recommends that you avoid placing your Axon Body 4 camera directly next to your radio to prevent inadvertent radio activation.

The various mounts that use this system can be used with a wide variety uniforms, and holds the camera to your shirt, patrol vest, or jacket.

In general, Axon mounting systems consist of the attachment piece (called the key) on the camera and the attachment receiver (called the lock) on the mount. To lock a camera in place, insert the key of the camera into the lock of the mount and turn it 90 degrees counterclockwise (when you are looking straight at the mount). To release the camera from the mount, turn the camera 90 degrees clockwise.

You can find further information on mounting options on www.axon.com.

Operating the Axon Body 4 Camera

Before using an Axon Body 4 camera, ensure it is fully charged and properly configured. See Charging the Battery for more information.

Operating Modes

The Axon Body 4 camera has two operating modes:

- Ready (Buffering) – turning on the camera and starting pre-event buffering
- Recording (Event) - event recording

Turning on the Camera and Ready (Buffering) Mode

1. Press the **Power** button until you feel a short vibration. The camera starts, emits two short rising-pitch tones with a long vibration and then enters Ready (Buffering) mode.

   When the camera is in Ready mode:

   - The Camera Display shows READY
   - The Operation LED on top of the camera blinks green
   - The camera will be capturing video but does not record to permanent memory while in Ready mode.

     Buffered video duration is 30 seconds by default (00:00:30).

   When Recording (Event) mode is activated, the buffered video captured directly before the event is saved and attached to the event in permanent memory. This feature is intended to capture the video of an incident just before a recording begins.

   With default settings, the camera does not capture audio during camera buffering, so anything recorded in that mode will be video-only.

   Ready mode starts only after the Axon Body 4 camera is turned on. The system does not record when the camera is turned off.

Notes:

- An agency can turn off camera buffering. If your agency has deactivated camera buffering, your Axon Body 4 camera will operate the same way as described in this manual, but the camera will not record anything until you double-press the EVENT button.

- An agency can extend the camera buffering duration to 2 minutes total (00:02:00).
- An agency can configure the camera buffering to record audio as well as video.

Starting Recording (Event) Mode

1. To begin recording, double-press the **Event** button on the camera.

   - Depending on your agency configuration, other events or actions can cause your camera to transition from Ready (buffering) to Recording mode. An example of this is if a device with Axon Signal technology broadcasts a signal.

   When your camera starts recording, the camera emits 2 short tones and 2 short vibrations. The camera display shows the recording icon.

   The camera now records audio as well as video. The buffered video captured directly preceding the event is saved and attached to the event recording. (**Note**: With default settings, the buffered video does not contain audio.) The moment Recording mode begins, both video and audio are recorded from the camera and GPS coordinates are recorded. This will continue throughout the duration of the recording until you stop the recording.

   The camera provides you with indications that it is in Recording mode:

   - The camera display shows STARTING and then the recording icon.
   - The Operation LED on the camera blinks red.
   - At the start of an event and every 2 minutes during an event, the camera emits 2 short tones and 2 short vibrations.

2. To stop recording and return to Ready mode, press and hold the **Event** button for 3 seconds.

   The camera will emit one long tone and vibrate once. The camera display shows SAVING and then READY. The Operation LED blinks green.

3. To turn off the camera, press and hold the power switch for 3 seconds.

Muting Audio Recording

If your organization's administrator has configured your Axon Body 4 camera to do so, you can use the Select button to enter mute mode (disable audio recording) while recording video. This feature may be useful in sensitive situations.

To enter and exit mute mode:

1. Press and hold the **Select** button for 3 seconds to mute the audio capture. The microphone off icon is shown on the camera display and the Operation LED will blink blue while the camera is muted.
2. Press and hold the **Select** button another 3 seconds to re-enable the audio recording.

Adding Markers while Recording

The Select button can be used to add a marker while recording video. The marker is shown when the video is replayed in Axon Evidence and documented in the audit trail. Markers are useful for indicating an important event that you want to easily find when replaying the video.

To add a marker to a video while you are recording:

- Press and release the **Select** button within 1 second. The camera will vibrate once.

Lighting the Camera Display

At night and in low-light situations, you can use the Select button to backlight the Camera Display. To backlight the display:

- Double-press the **Select** button. The camera display is backlit for 5 seconds.

Battery Status

The battery capacity for your Axon Body 4 camera is shown in the camera display.

Sleep Mode

Sleep Mode puts the camera in an idle state that disables recording and buffering. While in this state, an automatic activation, if enabled at your agency, will not initiate camera recording.

Note: The ability to use Sleep Mode is enabled by agency Axon Evidence administrators and may not be enabled at your agency.

Sleep Mode is useful for situations where camera users may need momentary privacy. The user can enter Sleep Mode from the buffering state in less than 4 seconds, as opposed to turning the camera completely off. Similarly, the camera will exit Sleep Mode and enter a buffering or recording state in less than 4 seconds.

The device audit trail reflects when Sleep Mode is entered and exited. While Sleep Mode can be used as an alternative to completely powering down the camera during private situations, it should not be considered a replacement for powering the camera off. Certain background processes are running while the camera is in Sleep Mode and the battery will still deplete while in this mode, just at a slower rate.

Entering and Exiting Sleep Mode

To enter Sleep Mode:

1. Press the Power button. The camera display shows **PRESS SELECT TO ENTER SLEEP**.

2. Within 3 seconds, press the Select Button to confirm. The camera display shows a crescent moon icon to show it is in Sleep Mode.

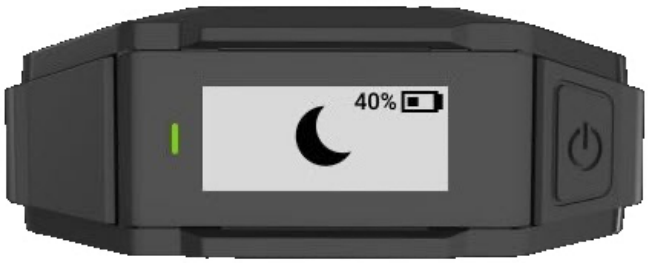

To exit Sleep Mode:

- Press the Power button to return the camera to buffering state.
- Double-press the Event button to begin recording.

Configuring Your Camera

During normal operation, an Axon Body 4 camera uses lights, sounds (audio prompts), and vibrations (haptic feedback) to notify you of the camera status. These indicators and notifications are normally managed by your organization but can be configured to allow you to change the setting for your assigned camera. Check with your organization's Axon administrator to learn which configuration settings you can change.

Adjusting Audio Prompt Volume

During normal operation, Axon Body 4 cameras emit beeping sounds, called audio prompts, to notify you of the camera status.

If allowed by your organization, there are several ways you can adjust camera audio prompt volume.

Using Camera Controls

Use the Volume ▲ and Volume ▼ buttons to adjust the volume. The camera provides audio feedback and indicates the volume setting on the Camera Display as the volume changes.

Using Axon View

Go to help.axon.com or see the *Axon View for Android Devices User Manual* or the *Axon View for iOS Devices User Manual* for detailed information about using Axon View.

Your Axon Body 4 camera must be turned on and paired with your mobile device. Open Axon View app on your mobile device and go to Settings. Tap Volume and select the volume level. The camera beeps once at the volume that you tapped, or if you tapped Off, the camera does not beep.

Turning On or Off Camera Lights

During normal operation, Axon Body 4 cameras use the LED lights to show the camera status.

For some situations, you may wish to turn off the LED lights for your camera. If allowed by your organization, there are several ways you can turn the camera lights off and on.

Using Camera Controls

- To turn off the camera lights - Press and hold Volume ▲ for 3 seconds, the lights will turn off and the Lights Out icon is shown on Camera Display.

- To turn on the camera lights - Press and hold Volume ▲ for 3 seconds, the lights will turn on and the Lights Out icon is no longer shown on Camera Display.

Using Axon View:

Go to the Axon View Product Guide page or see the *Axon View for Android Devices User Manual* or the *Axon View for iOS Devices User Manual* for detailed information about using Axon View.

Your Axon Body 4 camera must be turned on and paired with your mobile device. Open Axon View app on your mobile device and go to Settings. Tap the switch to the right of the **Indicator Lights** to change the setting.

Using Axon Evidence:

Go to the Edit Device Setting Product Guide page or see the *Axon Evidence User and Administrator Reference Guide* for detailed information about changing device settings.

Note: The updated settings will not take effect until the next time the camera is docked.

Sign in to your Axon Evidence account and go to the Device Profile page for your Axon Body 4 camera. In the Device Settings section, Use the **Indicator Lights** toggle switch to turn the light off or on. Save the new setting.

Setting Camera Automatic LED Brightness

The Automatic Brightness feature automatically adjusts the brightness of the camera's front and top LED lights based on ambient light conditions.

Agency Axon Evidence administrators can enable the Automatic Brightness setting in the Lights section on the Axon Body 4 Settings page and users must have permission to adjust indicator lights to enable Auto Brightness mode from the camera or Axon applications.

Using Camera Controls

- To enter Auto Brightness mode - Press and hold Volume ▲ for 3 seconds to cycle through the camera light options until the display shows LIGHTS AUTO.
- To exit Auto Brightness mode, press and hold the Volume Up button for 3 seconds to cycle through the camera light options until the display shows LIGHTS DIM. In this mode, the camera LED lights maintain the dim brightness level.
- To switch the lights off, press and hold the Volume Up button for 3 seconds to cycle through the camera light options until the display shows LIGHTS OFF. In this mode all camera LED lights are off.

Using Axon View:

Go to the Axon View Product Guide page or see the *Axon View for Android Devices User Manual* or the *Axon View for iOS Devices User Manual* for detailed information about using Axon View.

Your Axon Body 4 camera must be turned on and paired with your mobile device. Open the Axon View app on your mobile device and go to Settings. Tap the switch to the right of **Auto Brightness** to change the setting.

Using Axon Evidence:

Go to the Edit Device Setting Product Guide page or see the *Axon Evidence User and Administrator Reference Guide* for detailed information about changing device settings.

Note: The updated settings will not take effect until the next time the camera is docked.

Sign in to your Axon Evidence account and go to the Device Profile page for your Axon Body 4 camera. In the Device Settings section, use the **Automatic Brightness** toggle switch to turn on or off the feature. Save the new setting.

Turning Camera Vibrations On or Off

During normal operation, Axon Body 4 cameras use vibrations (haptic feedback) to notify you of the camera status.

For some situations, you may wish to turn off the vibrations for your camera. If allowed by your organization, there are several ways you can turn camera vibrations off and on.

Using Axon View:

Go to the Axon View Product Guide page or see the *Axon View for Android Devices User Manual* or the *Axon View for iOS Devices User Manual* for detailed information about using Axon View.

Your Axon Body 4 camera must be turned on and paired with your mobile device. Open the Axon View app on your mobile device and go to Settings. Tap the switch to the right of **Vibration** to change the setting.

Using Axon Evidence:

Go to the Edit Device Setting Product Guide page or see the *Axon Evidence User and Administrator Reference Guide* for detailed information about changing device settings.

Note: The updated settings will not take effect until the next time the camera is docked.

Sign in to your Axon Evidence account and go to the Device Profile page for your Axon Body 4 camera. In the Device Settings section, use the **Vibration** toggle switch to turn the light off or on. Save the new setting.

Stealth Mode

For some situations, you may wish to turn off the LED lights, sounds (audio prompts), and vibrations (haptic feedback) on your Axon camera. Turning off all the indicators and notifications is also known as stealth mode.

If allowed by your organization, there are several ways you can enter and exit stealth mode.

Using Camera Controls

- To enter Stealth mode - Press and hold Volume ▼ for 3 seconds. The word STEALTH is briefly shown in camera display activity area and an S icon is shown in the camera display status bar.
- To exit Stealth mode - Press and hold Volume ▼ or Volume ▲ for 3 seconds. The S icon is no longer shown on Camera Display status bar.

Using Axon View:

Go to the Axon View Product Guide page or see the *Axon View for Android Devices User Manual* or the *Axon View for iOS Devices User Manual* for detailed information about using Axon View.

Your Axon Body 4 camera must be turned on and paired with your mobile device. Open the Axon View app on your mobile device and go to Settings. Tap the switch to the right of **Stealth Mode** to change the setting.

Using Axon Evidence:

Go to the Edit Device Setting Product Guide page or see the *Axon Evidence User and Administrator Reference Guide* for detailed information about changing device settings.

Note: The updated settings will not take effect until the next time the camera is docked.

Sign in to your Axon Evidence account and go to the Device Profile page for your Axon Body 4 camera. In the Device Settings section, use the **Stealth** toggle switch to turn the light off or on. Save the new setting.

Other Settings and Functionality

Your organization's Axon administrator can configure additional settings and functionality (such as video quality, pre-event buffer time, and livestreaming) for your Axon Body 4 camera. Check with your Axon administrator for information about which settings and functionality are available for your camera.

Using Axon View

The Axon View application enables you to replay video and add metadata (title, case ID, and category) to your videos using a smart phone or other smart device.

To download and install Axon View:

1. Use your smart device to search for and download the Axon View application from the Play Store or the App Store.
2. On your smart device, install and open the Axon View application.
3. Follow the on-screen instructions or go to help.axon.com for additional information.

Note: All data is stored on the Axon camera. No videos are stored on your smart device.

Go to the Axon View Product Guide page or see the *Axon View for Android Devices User Manual* or the *Axon View for iOS Devices User Manual* for information about using Axon View.

Pairing Your Axon Body 4 Camera with a Smart Device

For additional information on using Axon cameras with a smart device, go to the Axon Body 4 Product Guide page or see the A*xon View for Android Devices User Manual* or the *Axon View for iOS Devices User Manual*.

Note: Internet access is required for pairing an Axon Body 4 camera with Axon View. The security model for Axon View with an Axon Body 4 camera requires server login access when pairing and when the authorization on the camera expires (approximately every 10 days).

1. Turn on the Axon Body 4 camera.
2. Open Axon View, select an Axon Body 4 camera and tap **Initiate Pairing**.
3. On the Axon Body 4 camera, simultaneously press the **Program** and **Event** buttons, and then quickly release. Do not hold the buttons.

You will hear three short rising-pitch tones, the Operation LED will blink blue, and PAIRING is shown on the camera display.

4. Follow the Axon View on-screen instructions. Tap the serial number for your camera. When pairing is complete, the pairing icon is shown in the camera display status bar.

Axon Signal

The Axon Body 4 camera is compatible with Axon Signal technology. However, your agency's Axon Evidence administrator must activate the Axon Signal capability for it to work.

When it is active, Axon Signal technology can broadcast a signal that allows your Axon Body 4 camera to transition from Ready to Recording mode automatically. When your camera starts recording, you will see, hear, and feel all the normal start recording notifications.

Axon Signal technology transmissions only allow cameras to start recording. Axon Signal technology does not transmit a signal to end recording. The camera must be stopped manually.

Axon Signal technology cannot turn an Axon system on. If the Axon Body 4 camera is turned off, the camera will not record, even if a device equipped with Axon Signal technology transmits a signal.

Devices equipped with Axon Signal technology have a signal range of approximately 30 feet (9.1 meters) and can be purchased separately from the Axon Body 4 camera.

Axon View XL Standalone Mode

The Axon Body 4 camera can be connected to a laptop or computer with Axon View XL to allow priority upload of videos from the camera to Axon Evidence and to charge the camera. Using Axon View XL in standalone mode is separate from using Axon View XL with Axon Fleet products.

The Axon Body 4 camera is connected to the laptop or computer with a USB A to USB C cable and uses the Axon View XL standalone mode.

If your agency will use this functionality:

- Contact your Axon Representative to get an approved and compatible USB A to USB C cable.
- Set up the appropriate Axon Evidence permissions to allow users to sign in to View XL.

After signing in to Axon View XL, the user selects Launch Standalone Mode and then connects the camera to the computer. The normal View XL procedures are used to review recordings, add metadata, and upload recordings. Go to the Body 4 and View XL Standalone Mode Product Guide section or see the A*xon Body 4 Camera and View XL Standalone Mode Guide* for information on using Axon View XL Standalone mode.

Button, Notification, and Display Reference Tables

This section has consolidated lists of the Axon Body 4 camera button actions, notifications, camera display icons, and LED indications.

Button Actions

The Axon Body 4 camera has six buttons. The button actions associated with user action are described below.

Action	Button Actions
Power On	Press **Power** button until a short vibration. Camera starts and enters Ready (Buffering) mode.
Power Off	Press and hold **Power** button for 3 seconds.
Start Recording	Double-press **Event** button.
End Recording	Press and hold **Event** button for 3 seconds.
Add Marker	While recording, press **Select** button.
Increase speaker volume	Press **Volume** ▲ button.
Decrease speaker volume	Press **Volume** ▼ button.
Turn on or off lights	Press and hold **Volume** ▲ button for 3 seconds.
Enter Stealth mode	Press and hold **Volume** ▼ button for 3 seconds.
Exit Stealth mode	Press and hold **Volume** ▲ or **Volume** ▼ button for 3 seconds.*
Enter or exit Mute mode	While recording, press and hold **Select** button for 3 seconds.
Enter Sleep mode	Press **Power** button and then press **Select** button.
Exit Sleep mode	Press **Power** button or double-press **Event** button.
Activate display backlight	Double-press **Select** button. Display backlight is on for 5 seconds.
Pairing	Simultaneously press the **Event** and **Program** buttons and then release.

* The camera remembers the previous volume and light settings when exiting Stealth mode.

Camera Display

The display is divided into a Status Bar and Activity Area. Different information is shown when the Axon Body 4 camera is in the field and in an Axon Dock.

Note that some icons may not be active or displayed at your agency.

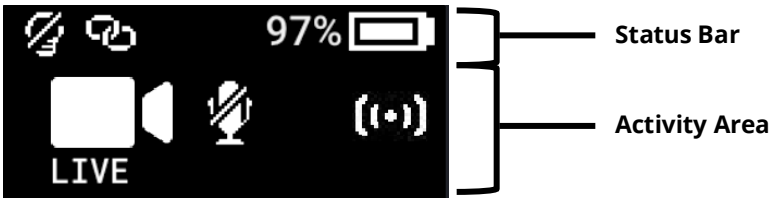

In the Field

Status Bar Icon	Description
58%	Battery capacity
	Camera paired
	Lights off
S	Stealth mode on
!	Battery low warning (to the right of the battery capacity icon)

Activity Area Icon	Description
READY	Ready (Buffering) mode
	Recording
	Recording started by Axon Signal broadcast*
LIVE	Axon Respond Livestreaming*
	Recording started by gunshot detection*
	Microphone off (mute mode)
	Sleep Mode*

* May not be enabled for your agency.

In an Axon Dock

Status Bar Icon	Description
58%	Battery capacity
	Charging (to the right of the battery capacity icon)
	Update in progress

Activity Area Icon	Description
UPLOADING	Upload in progress
UPDATING	Updating firmware or settings
NETWORK ERROR	Possible network error. Check network connection and refer to device profile page in Axon Evidence.
USERID123	Assigned user ID - shown when no other activity is in progress and for 10 seconds after removing from the dock

Notifications

The Axon Body 4 camera emits sounds called audio prompts to notify you of the device status. The audio prompts are accompanied by a vibration that matches the audio. These prompts usually occur after you perform an action with the body camera.

Operating Mode or Action	Audio Notification	Haptic Notification (vibration)
Power on	Two short rising-pitch tones	One - long duration
Power off	Three short lowering-pitch tones	One - long duration
Start recording	Two short tones	Two - short duration
Recording reminder	Two short tones every 2 minutes	Two - short duration every 2 minutes
Stop recording, return to Ready mode	One long tone	One - long duration
Volume up or down	One short tone at new volume level	One – short duration
Axon Respond Livestreaming connected	Three short rising-pitch tones	One – long duration
Enter or Exit Mute mode (microphone off)	One short tone	Two - long duration
Exit Stealth mode	None	two - short duration
Event marker captured	None	One - short duration
Enter or Exit Sleep mode	One short tone	One – long duration
Low battery notifications at 10% and 5% battery capacity.	Four quick high-pitch tones	Four - short duration
Camera enters Pairing mode	Three short rising-pitch tones	None

LED Status

Operation LED

The operation LED shows information about the camera's current operating mode.

Operating Mode	Operation LED
Recording	Blinking red
Ready (Buffering)	Blinking green
Booting up/powering down	Solid red
Mute enabled or Pairing mode	Blinking blue
Axon Respond Livestreaming (may not be enabled at your agency)	Blinking purple
Low battery or error	Blinking yellow
In a Dock (no other action)	Battery capacity color
Firmware update (while in an Axon Dock)	Solid white

Triad LED (in the field)

In the field, the Triad LED on the front of the camera can be configured to display the camera's operating mode.

Operating Mode	Triad LED
Ready (Buffering)	Blinking green
Recording	Blinking red

Triad LED (in an Axon Dock)

In the Axon Dock, the Triad LED on the front of the camera shows the device status and battery capacity. See the camera display for additional information.

Device Status	Triad LED
Battery is fully charged (90% or more)	Solid green
Battery capacity is at mid-range (11% to 89%)	Solid yellow
Battery capacity is at low-range (10% or less)	Solid red
Uploading data, downloading data, or applying device settings	Spinning yellow (cycling yellow on each Triad LED)
Applying a firmware update	Spinning white (cycling white on each Triad LED)
Possible network error. Refer to Troubleshooting section of the manual or Axon Body Product Guide.	Blinking red and green
Device error. Refer to device page in Axon Evidence.	Blinking red

Care and Maintenance

This section provides information on cleaning, charging, and storage for your Axon Body 4 camera. Users should never remove the back cover of the camera, as this can compromise camera integrity and invalidate the camera warranty.

Cleaning the Camera

Use a soft, damp cloth to clean the surface of the Axon Body 4 camera. Do not use harsh cleaners or solvents. You may moisten the cloth with isopropyl alcohol.

Do not immerse the Axon Body 4 camera in water or cleaning solutions.

If the Axon Body 4 camera lens becomes dirty, use a lens blower brush to clean it and then wipe it with a soft cloth if necessary.

If the Axon Body 4 camera display becomes dirty, clean the display with soapy water and then dry with a soft cloth.

Do not use ammonia-based or similar type window cleaners on the camera lens or camera display.

Do not place the lens under running water or apply jets of water to the camera lens.

Do not use compressed air to clean the camera. Compressed air may damage the camera's microphones.

Ensure the Axon Body 4 microphone openings are clean and clear of any debris.

Charging the Battery

The Axon Body 4 camera battery is charged by placing the camera in an Axon Body 4 Dock or by connecting a USB-C cable to the camera and then to a power adapter or, for USB-C to USB-A cables, to a computer USB port.

IMPORTANT: Ensure the USB port is dry and free of dirt and debris before placing the camera in a Dock or connecting a USB-C cable.

A fully charged camera battery should provide enough power for approximately 14 hours of normal operation. Recharging a battery after a 14-hour use can take up to 5 hours if you are recharging your Axon Body 4 camera from Axon Body 4 Dock.

The Axon Body 4 Dock only functions as an Ethernet adapter, an unmanaged network switch, and charger. This allows your Axon Body 4 camera to be docked in any Axon Body 4 Dock, and still connect to your agency's Axon Evidence account to upload video.

If the battery depletes significantly during use, the camera display will show LOW BATTERY and the camera emits 4 quick tones and 4 short vibrations. This message indicates that approximately 10 percent of the battery capacity remains and is repeated at 5 percent battery capacity.

Always recharge a depleted battery as soon as reasonably possible.

Charging an Axon Body 4 Camera while Powered Off

The Axon Body 4 camera can be charged by using a USB-C cable while the camera is off. This allows users to charge the Axon Body 4 camera battery when an Axon Body 4 Dock is not available. However, Axon recommends that you regularly place your Axon Body 4 camera in an Axon Body 4 Dock to ensure that the camera has the correct time synchronization and latest firmware updates.

If needed, you can request a USB-A to USB-C cable directly from Axon. Contact your Axon Representative or Axon Support for assistance.

1. While your Axon Body 4 camera is powered off, connect the camera to a USB-C cable.
2. Connect the cable to a power adapter or, for a USB-C to USB-A cable, to a USB port.

   IMPORTANT: Ensure the USB port is dry and free of debris before connecting the USB-C cable.

   The camera enters low-power mode, and the current charge level is shown on the camera display.

   The Operation LED color also provides a visual indication of the charge level. The LED is red when the charge level is less than or equal to 33%, yellow when the charge level is 34% to 97%, and green when the charge level is 98% or higher.

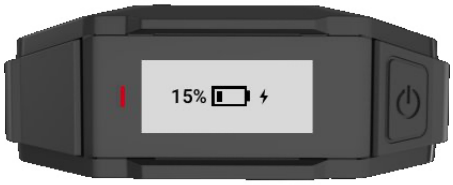

While charging with the camera powered off, you can:

- Power on the camera by pressing the Power button until you feel a short vibration. The camera starts and enters Ready (buffering) mode.

- Shut down the camera by disconnecting the USB-C cable.

Camera Internal Clock

Axon Body 4 cameras should be regularly placed in an Axon Dock or connected to View XL Standalone Mode to update the camera's internal clock.

Wet Axon Body 4 Cameras

Do not charge your Axon Body 4 camera while the USB-C connector on the camera or Dock is wet.

If the USB-C connector is wet, use a paper towel or absorbent cloth to blot the connector and then allow the connector to fully dry.

If a camera is charging when it gets wet, remove the camera from the charging source (dock or USB cable), use a paper towel or absorbent cloth to blot the connector, and then allow the connector to fully dry.

The USB-C connector must be fully dry before placing the camera in a dock or connecting a USB-C cable.

Camera Storage

Axon on-officer cameras should not be stored in environments where the temperature is likely to exceed 95 °F (35 °C) (such as under direct sunlight, near heaters, or in a vehicle in extremely hot weather) or exposed to temperatures below −4 °F (−20 °C). Axon recommends storing the camera around room temperature, 70 - 75 °F (21 – 24 °C) and ensuring the battery level is approximately 50% before powering down and putting the camera in long-term storage. Axon recommends charging the stored camera back to around 50% once a year to prevent over-discharge of the battery. Do not store the camera fully charged or fully discharged.

Troubleshooting and Other Information

If you are having problems with your Axon Body 4 camera or an error message with code 1001 or 1004 is shown the display, turn the camera off and then turn it on again to see if the problem clears.

An error message with code 1006 may be shown when a camera is in a dock. In this situation, remove the camera from the dock and then return it to the dock, making sure it is firmly seated in the dock bay.

If these actions do not resolve the difficulties, contact Axon Technical Support for additional support.

Go to the Axon Body 4 Product Guide page and refer to the Axon Body 4 troubleshooting information.

Viewing Camera Information on the Camera Display

You can view some camera information, such as the camera serial number, for the Axon Body 4 camera on the camera display using the following steps:

1. Turn on your Axon Body 4 by pressing the **Power** button.

   READY is shown on the camera display when the camera is on.

2. Double press the **Select** button.

   The camera display shows four options: About, Cellular, Legal and POV Orientation.

3. Use the **Volume ▼** or **Volume ▲** button to highlight About and then press the **Select** button.

   The camera display shows four options: Assignee, Firmware, Serial, and Storage.

4. Use the **Volume ▼** or **Volume ▲** button to highlight information you want to view and the press the **Select** button.

   Press the **Select** button to return to the four options.

5. Press the **Event** button to return to the normal camera display.

Technical Support

Visit www.axon.com and view the Support options or call 1-800-978-2737.

Warranty Policy

Axon Enterprise warranty provisions are applicable on all Axon Body 4 system products. See Axon Enterprise's website, www.axon.com, for detailed warranty information.

This warranty does not apply, and Axon shall not be liable for any loss, loss of data, damage, or other liability arising out of:

(a) damage caused by failure to follow instructions regarding the use of the product;

(b) damage caused by the use of non-AXON products or the use of cartridges, batteries or other parts, components or accessories not manufactured or recommended by AXON;

(c) damage caused by abuse, misuse, intentional or deliberate damage to the product, or force majeure;

(d) damage to a product or part that has been repaired or modified by persons not authorized by AXON or without AXON's written permission, or

(e) if any AXON serial number has been removed or tampered with.

Thus, any handling of the Axon Body 4 Camera that alters the condition of the equipment by unauthorized personnel without proper technical training may result in the immediate loss of the manufacturer's standard warranty coverage by impacting the integrity of the equipment and rendering the quality testing performed by specialized technical personnel impossible after handling the equipment.

Warnings

For a full list of the warning associated with this product, see www.axon.com.

Radio Waves

An Axon Body 4 system transmission is in the frequency ranges of 2402 – 2480 MHz, 2412 – 2462 MHz, 5150 – 5350 MHz, 5470 – 5725 MHz, 5725 – 5850 MHz. Additionally, depending on the model number, it transmits in the frequencies listed below:

- AX1037: LTE B12 (699 – 716 Mhz), LTE B13 (777 – 787 MHz), LTE B14 (788 – 798 MHz), LTE B26 (814 – 849 MHz), LTE B5 (824 – 849 MHz), LTE B4 (1710 – 1755 MHz), LTE B66 (1710 – 1780 MHz), LTE B2 (1850 – 1910 MHz), LTE B25 (1850 – 1915 MHz), LTE B30 (2305 – 2315 MHz), LTE B7 (2500 – 2570 MHz)
- AX1038: TBC

Changes or modifications to the equipment not expressly approved by the manufacturer could void the product warranty and the user’s authority to operate the equipment.

Your wireless device is a radio transmitter and receiver. It is designed and manufactured not to exceed the emission limits for exposure to radio frequency (RF) energy set by the Federal Communications Commission (FCC) of the U.S. Government. These limits are part of comprehensive guidelines and establish permitted levels of RF energy for the general population. The guidelines are based on standards that were developed by independent scientific organizations through periodic and thorough evaluation of scientific studies. The standards include a substantial safety margin designed to assure the safety of all persons, regardless of age and health. Before a device model is available for sale to the public, it must be tested and certified to the FCC that it does not exceed the limit established by the government-adopted requirement for safe exposure. This equipment has been tested and found to comply with the limits for a Class B digital device, pursuant to part 15 of the FCC Rules. These limits are designed to provide reasonable protection against harmful interference in a residential installation. This equipment generates, uses and can radiate radio frequency energy and, if not installed and used in accordance with the instructions, may cause harmful interference to radio communications. However, there is no guarantee that interference will not occur in a particular installation. If this equipment does cause harmful interference to radio or television reception, which can be determined by turning the equipment off and on, the user is encouraged to try to correct the interference by one or more of the following measures:

- Reorient or relocate the receiving antenna.
- Increase the separation between the equipment and receiver.
- Connect the equipment into an outlet on a circuit different from that to which the receiver is connected.
- Consult Axon Technical Support for help.

This device complies with part 15 of the FCC Rules. Operation is subject to the following two conditions: (1) This device may not cause harmful interference, and (2) this device must accept any interference received, including interference that may cause undesired operation.

This device complies with Industry Canada licence-exempt RSS standard(s). Operation is subject to the following two conditions: (1) this device may not cause interference, and (2) this device must accept any interference, including interference that may cause undesired operation of the device.

Le présent appareil est conforme aux CNR d'Industrie Canada applicables aux appareils radio exempts de licence. L'exploitation est autorisée aux deux conditions suivantes : (1) l'appareil ne doit pas produire de brouillage, et (2) l'utilisateur de l'appareil doit accepter tout brouillage radioélectrique subi, même si le brouillage est susceptible d'en compromettre le fonctionnement.

This equipment complies with the IC RSS-102 radiation exposure limits set forth for an uncontrolled environment.

Énoncé d'exposition aux rayonnements: Cet équipement est conforme aux limites d'exposition aux rayonnements ioniques RSS-102 Pour un environnement incontrôlé.

Section 8.4 of RSS-GEN

This Device complies with Industry Canada License-exempt RSS standard(s). Operation is subject to the following two conditions: 1) this device may not cause interference, and 2) this device must accept any interference, including interference that may cause undesired operation of the device.

Cet appareil est conforme aux normes d'exemption de licence RSS d'Industrie Canada. Son utilisation est soumise aux conditions suivantes : 1) cet appareil ne doit pas causer de brouillage, et 2) doit accepter tout brouillage, y compris le brouillage pouvant entraîner un fonctionnement indésirable.

Section 8.3 of RSS-GEN

Under Industry Canada regulations, this radio transmitter may only operate using an antenna of a type and maximum (or lesser) gain approved for the transmitter by Industry Canada. To reduce potential radio interference to other users, the antenna type and its gain should be chosen so that the equivalent isotropically radiated power (e.i.r.p.) is not greater than necessary for successful communication.

Conformément à la réglementation d'Industrie Canada, le présent émetteur radio ne peut fonctionner qu'au moyen d'une antenne d'un seul type et d'un gain maximal (ou inférieur) approuvé pour l'émetteur par Industrie Canada. Dans le but de réduire les risques de brouillage radioélectrique pour les autres utilisateurs, il faut choisir le type d'antenne et son gain de sorte que la puissance isotrope rayonnée équivalente (p.i.r.e.) ne dépasse pas celle requise pour établir une communication satisfaisante.

THIS MODEL DEVICE MEETS THE GOVERNMENT'S REQUIREMENTS FOR EXPOSURE TO RADIO WAVES

Declaration of Conformity

TBC

Designed in Arizona, assembled in USA from foreign components.

Compliance Marks

When applicable, you can view the e-labeling information for the Axon Body 4 camera on the camera display using the following steps:

1. Turn on your Axon Body 4 by pressing the **Power** button.

   READY is shown on the camera display when the camera is on.

2. Doble press the **Select** button.

3. The camera display shows four options: About, Cellular, Legal and POV Orientation.

4. Use the **Volume ▼** or **Volume ▲** button to highlight Legal, and then press the **Select** button.

5. The camera display will automatically scroll the following information. Optionally you can use the **Volume ▼** or **Volume ▲** button to manually scroll through the information.

   For Model AX1037

   - Model: AX1037
   - FCC ID: X4GS01506
   - IC: 8803A-S01506
   - Contains FCC ID: X4GAB065
   - Contains IC: 8803A-AB065
   - ICES-3(B)/NMB-3(B)