Bluetooth 6.0, 802.15.4 Module BM20C

Draft Ver 0.81 June 2026

BM20C is a powerful, highly flexible, ultra low power Bluetooth Low Energy (BLE) using Nordic nRF54LM20A SoC. With a ARM Cortex™ M33 MCU at 128 MHz, a RISC-V co-processor for peripherals, embedded 2.4GHz multi-protocol transceiver, and an integrated PCB trace, chip antenna or connection for an external antenna. The nRF54LM20B variant includes an Axon Neural Processing Unit (NPU) - an edge AI accelerator.

BM20C footprint is compatible with (1) BM20NE, a module with Nordic nRF21540 power amplifier; (2) BM20XE, a module with Skyworks SKY66403 power amplifier; (3) WM02C20C, a combo module with nRF7002 WiFi 6. All modules can be with or without Axon NPU.

BM20C uses an nRF54LM20A SoC. The corresponding module with an nRF54LM20B is BM20BC.

Specifications:

BLE 6.0, IEEE 802.15.4-2020 Transceiver

- Complete RF solution with integrated antenna
  - BLE: 2Mbps, 1Mbps, 500kbps, 125kbps.
  - IEEE 802.15.4-2020: 250 kbps.
  - Proprietary: 4Mbps, 2Mbps, 1Mbps.
  - 128-bit AES/ECB/CCM/AAR coprocessor.
- Programmable TX power, from -10 dBm to +8 dBm, in 1 dB step.

Platform Security

- Secure/non-secure memory protection
- Symmetric and asymmetric key crypto accelerator.
- Secure key management.
- Tamper detection.
- Immutable boot partition.
- Debug access port protection.
- Individual watchdog timers for secure and non-secure context.

Application processor

- ARM® Cortex® M33 with TrustZone®, 128MHz.
- 500 EEMBC CoreMark score running from non-volatile memory, 3.90 CoreMark per MHz.
- 2036 KB non-volatile memory(RRAM), 512 KB RAM.
- Floating point unit, DSP instructions.
- Data watchpoint and trace.
- Serial Wire Debug (SWD)

Peripherals

- RISC-V Coprocessor.
- High-speed USB (480 Mbps), Full speed (12 Mbps), and low speed (1.5 Mbps)
- A global real-time counter can run is System OFF mode.
- Seven 32 bit timers with counter mode.
- Six fully featured serial interfaces with EasyDMA, supporting I^2C, SPI controller/peripheral, and UART.
- One high speed capable SPIM (32 MHz) or UART with EasyDMA.
- Three PWM units with EasyDMA.
- Time Division Multiplexed (TDM) sound interface.
- Two pulse density modulated (PDM) microphone interface, 48x, 50x, 64x, 80x, 96x, 150x, and 192x decimation ratios.
- ADC with up to 8 programmable gain channels. 14-bit at 31.25 ksps, 12 bit at 250 ksps, and up to 10 bit at 2 maps.
- NFC.
- 2 x QDEC.
- 90 LGA pins, 66 GPIOs.
- 32.0 MHz and 32.768 kHz crystals embedded.
- 1.8V and 3.3V supply voltage.
- All evaluation boards use an nRF54LM20B module. Don't use the Axon NPU if an nRF54LM20A module is used.
- Operation temperature: -40°C to +125°C

Model Summaries

module	BM20M/BM20BM	BM20C/BM20BC	BM20E/BM20BE	BM20F/BM20BF	BM20P/BM20BP
SoC	nRF54LM20A/B	nRF54LM20A/B	nRF54LM20A/B	nRF54LM20A/B	nRF54LM20A/B
Size, mm	10.0x14.0mm	10.0x14.8mm	10.0x15.0 mm	10(15.2) x 20.8	10.0 x 10.5
Antenna	PCB Trace	Chip	U.FL for external	High perf. PCB	Pads for external
BLE range	300M est.	500M, est.			
FCC ID					
ISED ID					
CE, RCM					
TELEC					
NCC					
KCC					
Evaluation board	EV-BM20BM	EV-BM20BC	EV-BM20BE	EV-BM20BF	EV-BM20BP
Availability	Sample/NonStock	Sample/Sample	Sample/NonStock	NonStock/Sample Q3	NonStock/Samples Q3

Of Contents

1. Introduction 3
BM20C Block Diagram 3
BM20M 4
BM20C and BM20BC 4
BM20E 4
BM20BF 4
BM20BP 4
2. BM20C Specifications 5
Nordic SoCs 5
Mechanical Drawings 6
BM20C pin map 11
PIN Function BM15C, BM20C, BMH20C 12
Upgrading to BM20NE, BM20XE, WM02C20C 15
Mounting BM20C on the Host PCB 18
Suggestion for Battery Power Application 18
EV-BM20BC Evaluation Board Schematics 19
Evaluation Board 21
3. Firmware Development 22
Loading Firmware into Evaluation Board Through a Nordic DK 22
Procedures to Load Firmware 23
Preloaded Firmware 26
4. Miscellaneous 27
Soldering Temperature-Time Profile for Re-Flow Soldering 27
Cautions, Design Notes, and Installation Notes 27
Packaging 30
FCC Label 30
5. Revision History 31
6. Contact Us ..... 錯誤! 尚未定義書籤。

1. Introduction

BM20C is a powerful, highly flexible, ultra low power Bluetooth Low Energy (BLE) using Nordic nRF54LM20 SoC. With an ARM Cortex™ M33 MCU at 128 MHz, a RISC-V MCU for peripherals, embedded 2.4GHz multi-protocol transceiver, and an integrated PCB trace or chip antenna or u.FL connector for an external antenna. It allows faster time to market with reduced development cost.

The following modules use nRF54LM20A or nRF54LM20B SoC and have compatible footprints. BM20C is the core of these series of modules.

- BM20C, BM20BC, BM20E, BM20BF, BM20M, BM20BP are referred as BM20C in this product specifications.
- Modules with a Nordic nRF21540 power amplifier, BM20NE.
- Modules with a Skyworks SKY66403 power amplifier, BM20XE.
- Modules with a Nordic nRF7002 WiFi 6 SoC, WM02C20C.

The following is a block diagram of BM20C. Antenna circuit and main clock are integrated. All 66 GPIOs of nRF54LM20A can be accessed from main board. For lower power consumption at idle state, a 32.768 kHz crystal is embedded. Connection to an external NFC (Near Field Communication) antenna is provided.

BM20C Block Diagram

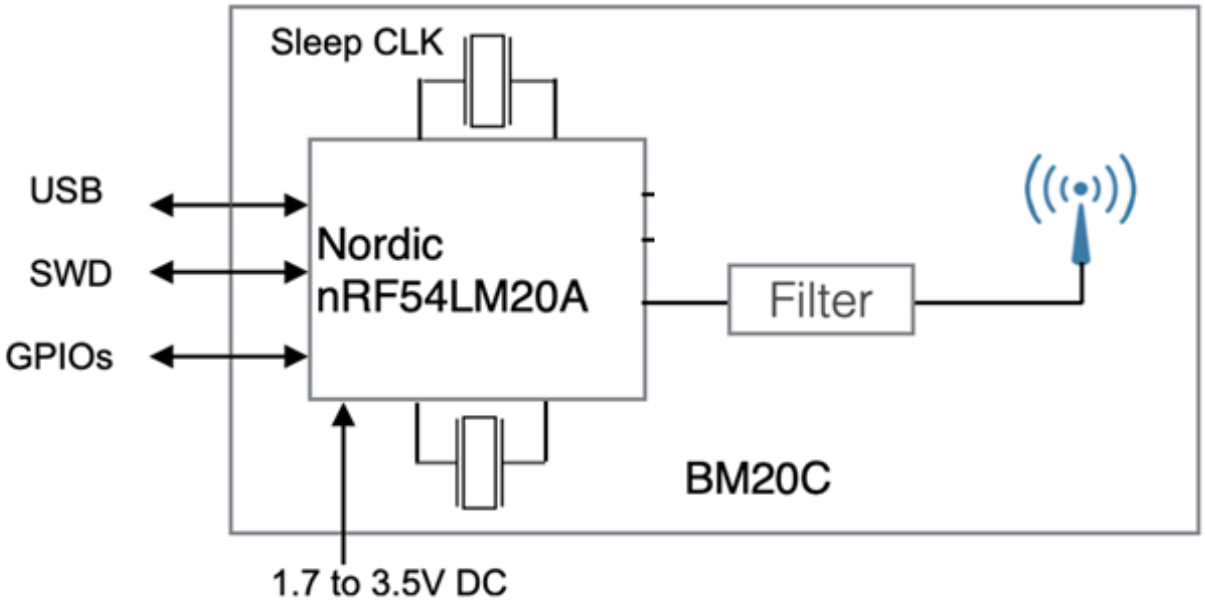

BM20C Series modules have the same features except the followings.

BM20M

- BM20M has an nRF54LM20A SoC.
- Integrated PCB trace antenna
- Size: 10x14.0 mm
- BM20BM has an nRF54LM20B SoC to support edge AI applications.
- BM20BM is manufactured to order only.

BM20C and BM20BC

- BM20C has an nRF54LM20A SoC.
- Integrated high performance chip antenna
- Size: 10x14.8mm
- BM20BC has and nRF54LM20B SoC to support edge AI applications.

BM20E

- BM20E has an nRF54LM20A SoC.
- An u.FL connector for external antenna
- Size: 10x15.0mm.
- BM20BE has an nRF54LM20B SoC to support edge AI applications.
- BM20BE is manufactured to order only.

BM20BF

- BM20BF has an nRF54LM20B SoC to support edge AI applications.
- Integrated high performance PCB trace antenna
- Size: 10.0(15.2 in antenna area)x20.8 mm
- BM20F has an nRF54LM20A SoC.
- BM20F is manufactured to order only.

BM20BP

- BM20BP has an nRF54LM20B SoC to support edge AI applications.
- Pads for external antenna connection.
- Size: 10.0x10.5mm.
- BM20P has an nRF54LM20A.
- BM20P is manufactured to order only.

2. BM20C Specifications

Nordic SoCs

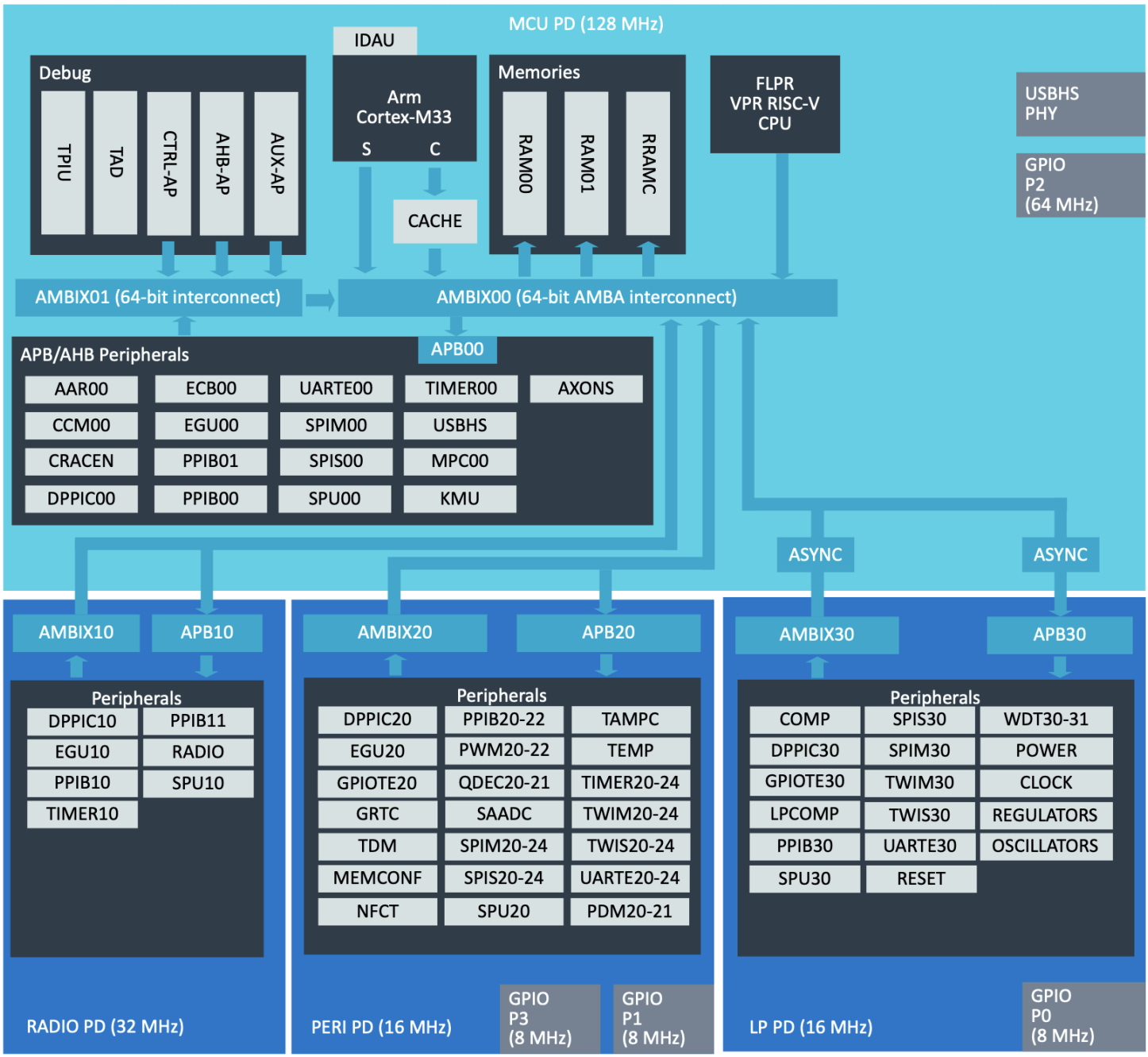

A block diagram of nRF54LM20B is below. The AXONS block is removed in nRF54LM20A.

Mechanical Drawings

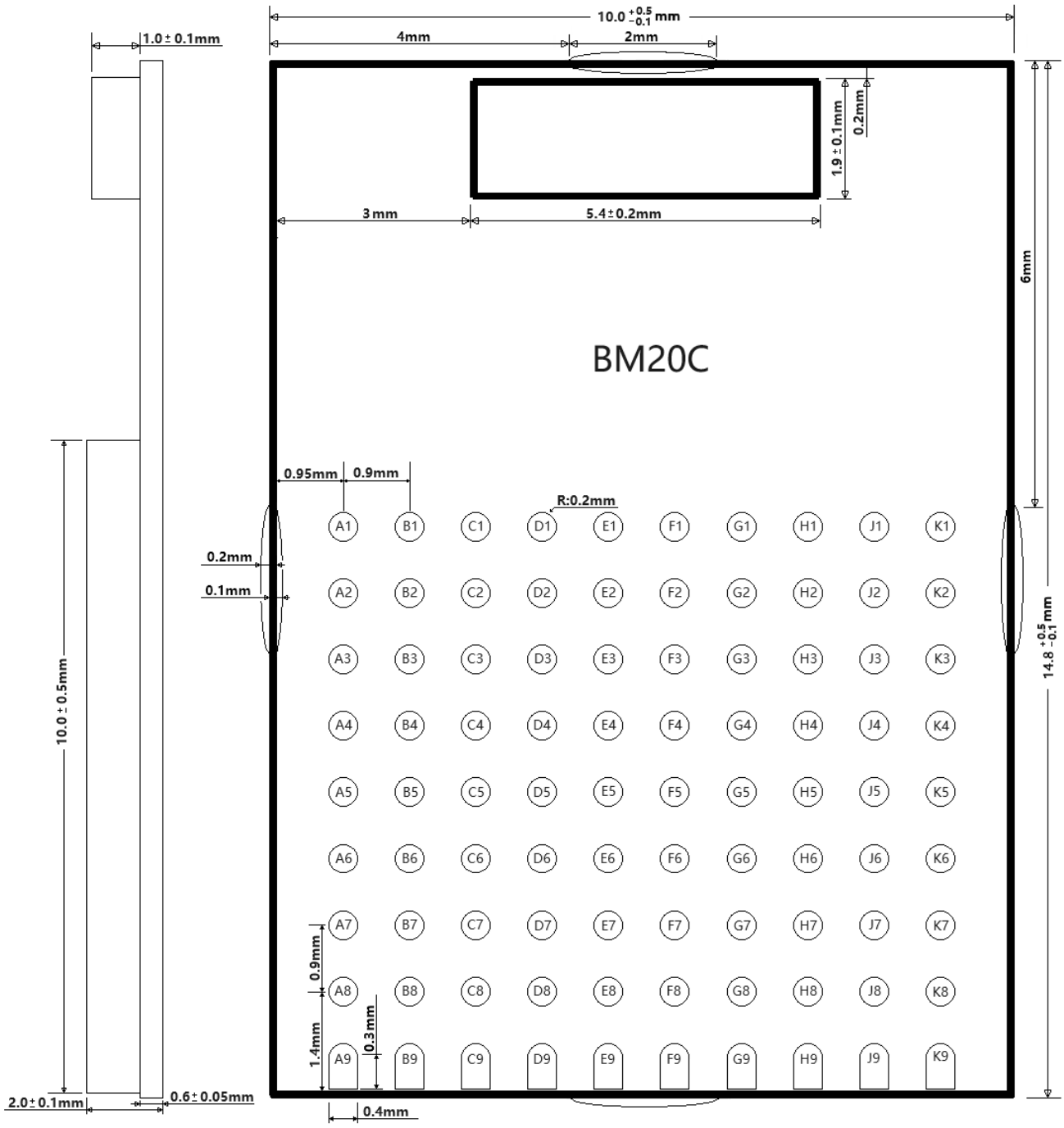

The following is mechanical drawings of BM20C and BM20BC, top view.

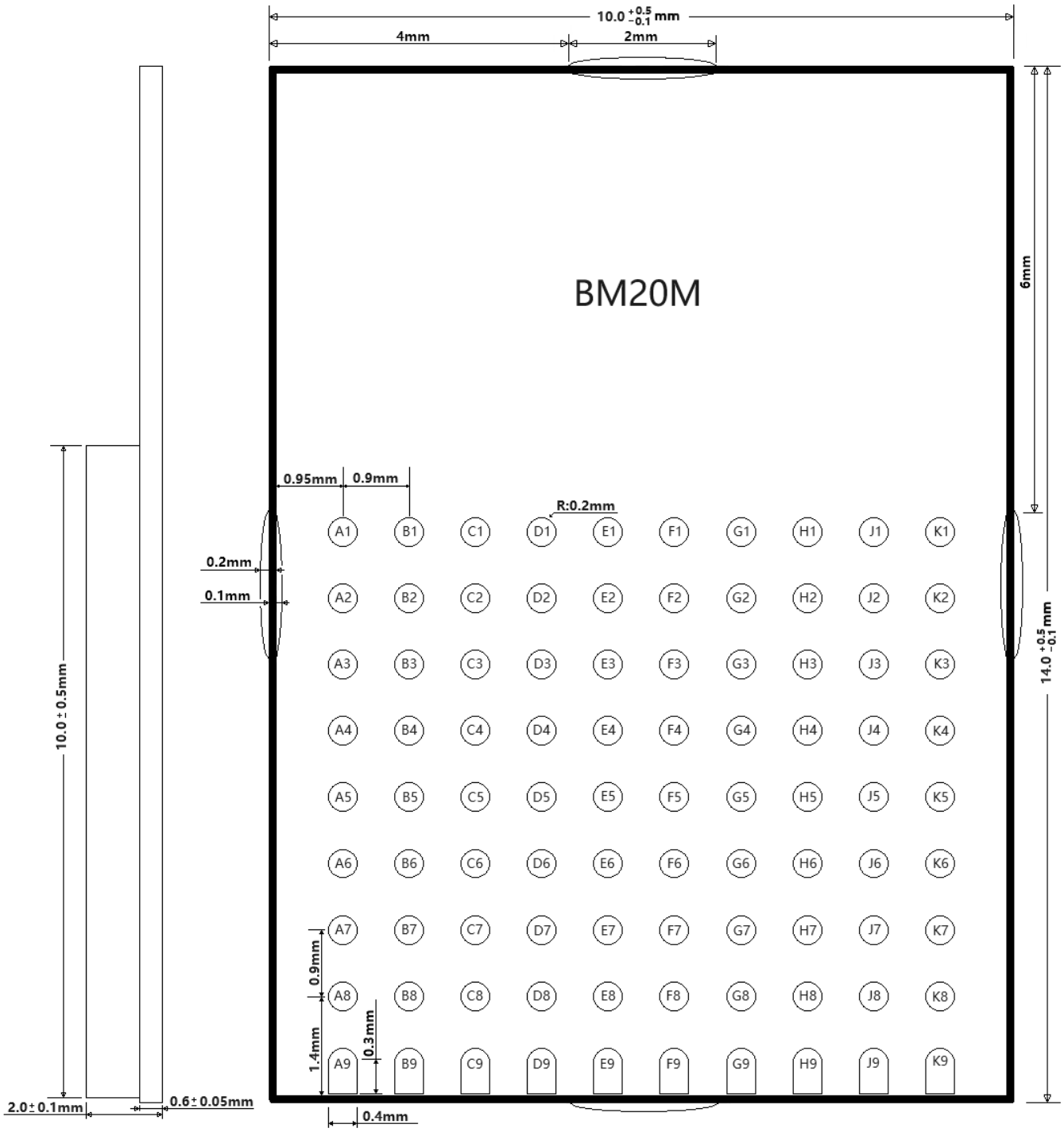

The following is mechanical drawings of BM20M and BM20BM, top view.

The following is mechanical drawings of BM20E and BM20BE, top view.

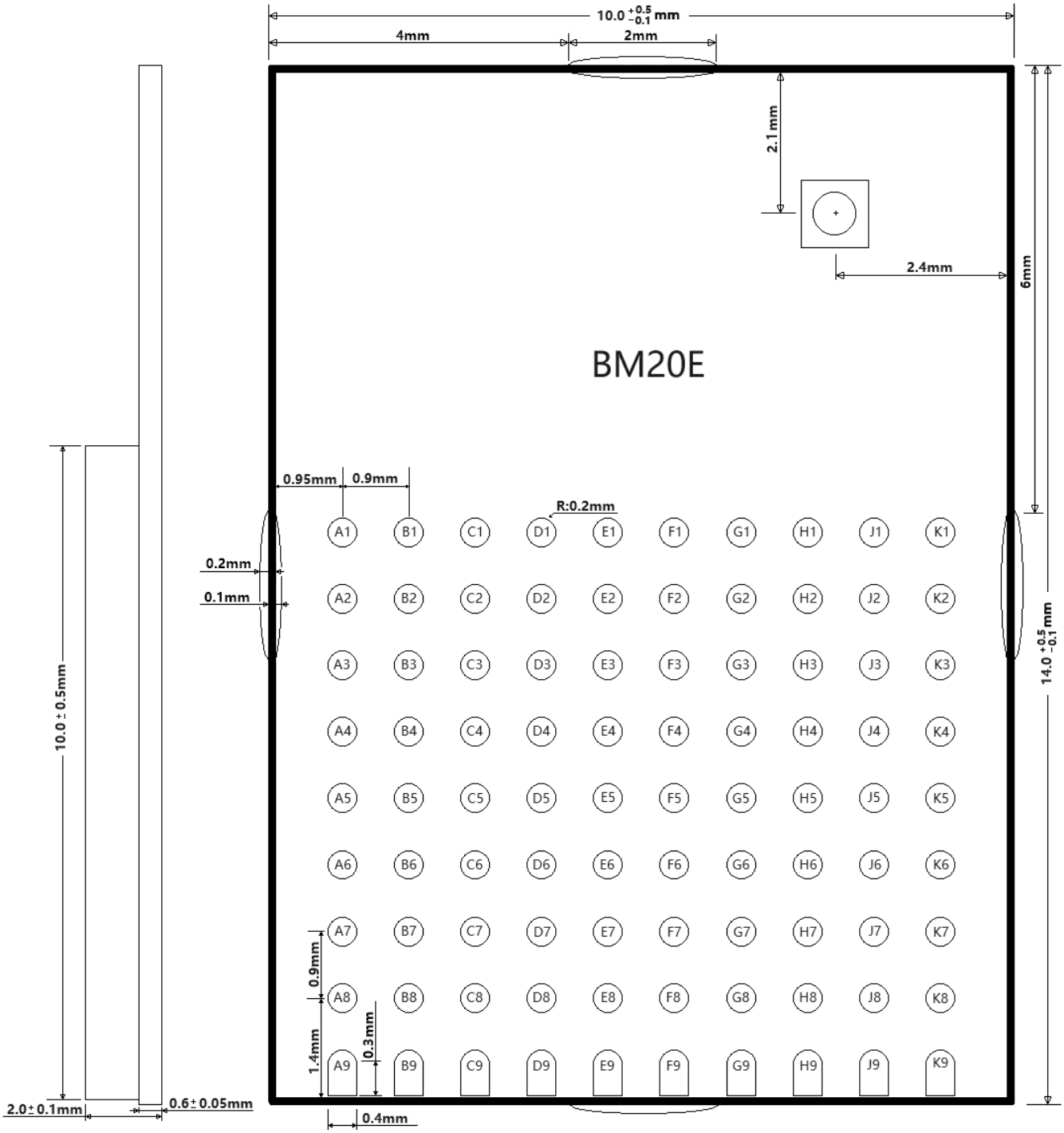

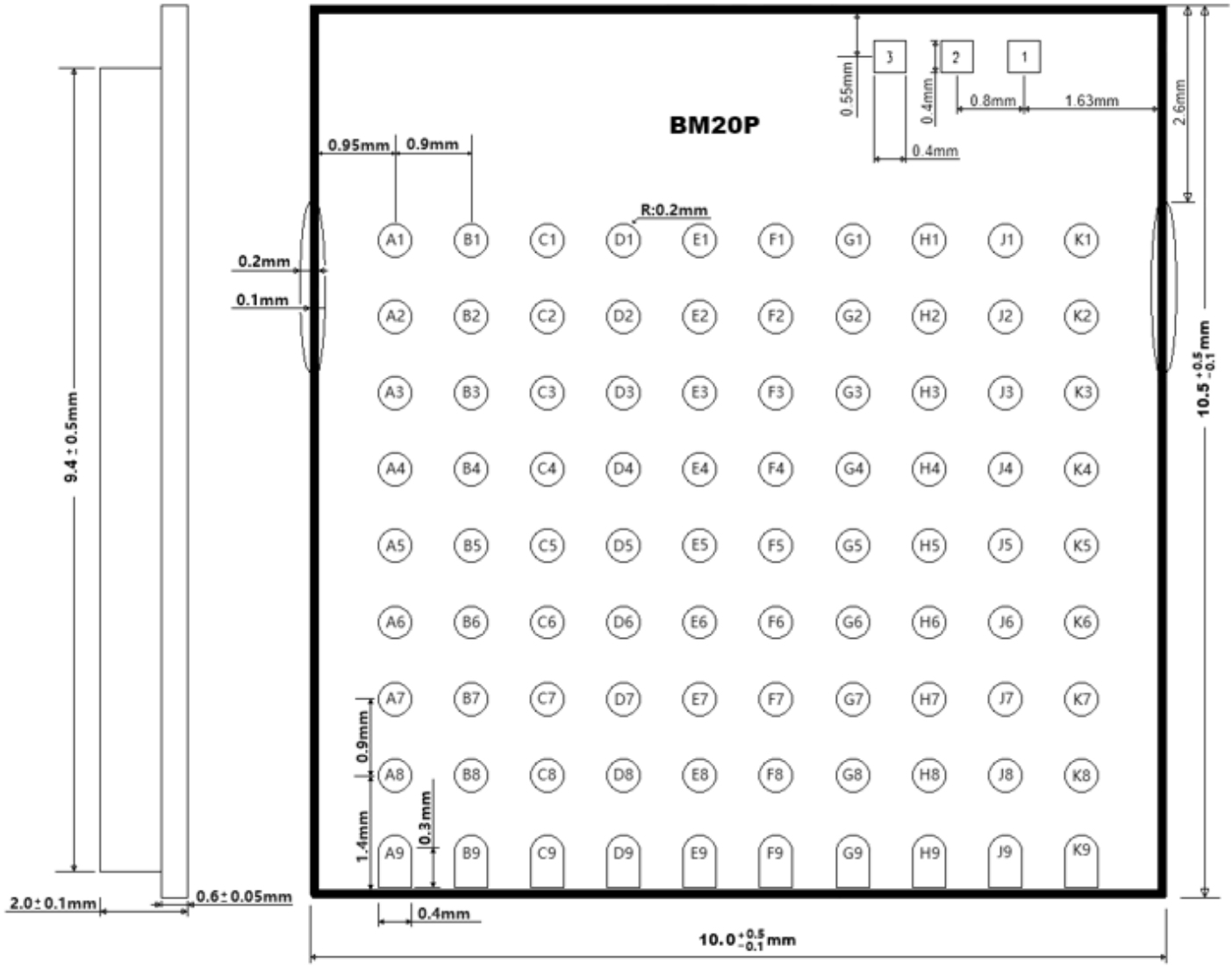
BM20P
0.95mm
0.9mm
R:0.2mm
0.2mm
0.1mm
0.55mm
0.4mm
0.8mm
1.63mm
2.6mm
0.4mm
9.4 ± 0.5mm
10.5 +0.5 -0.1 mm
0.9mm
1.4mm
0.3mm
2.0 ± 0.1mm
0.6 ± 0.05mm
0.4mm
10.0 +0.5 -0.1 mm

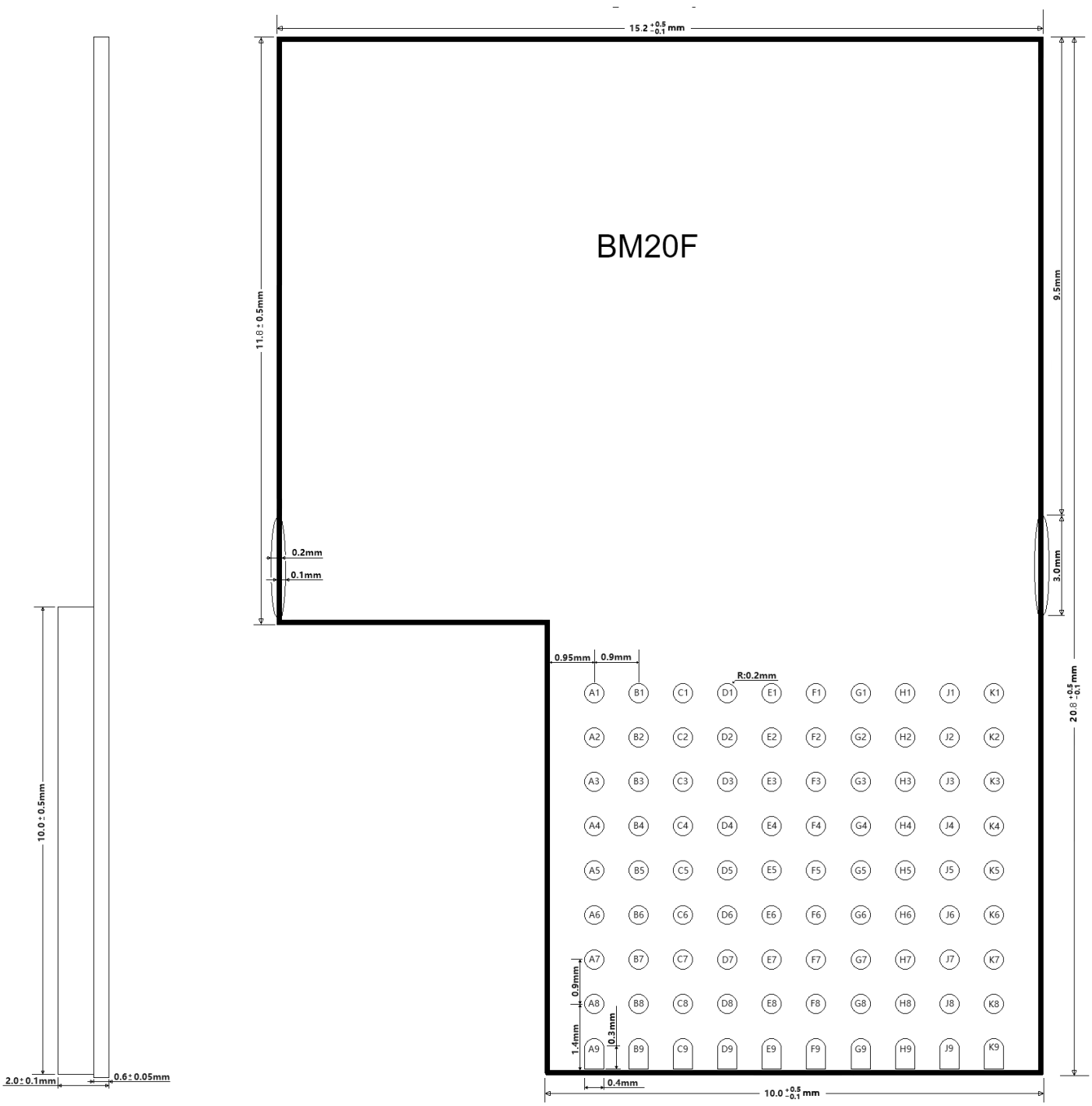

The following is mechanical drawings of BM20F and BM20BF, top view.

BM20C pin map

BM20C is an nRF54LM20A module with 64 GPIO pins. All GPIO pins are accessible.

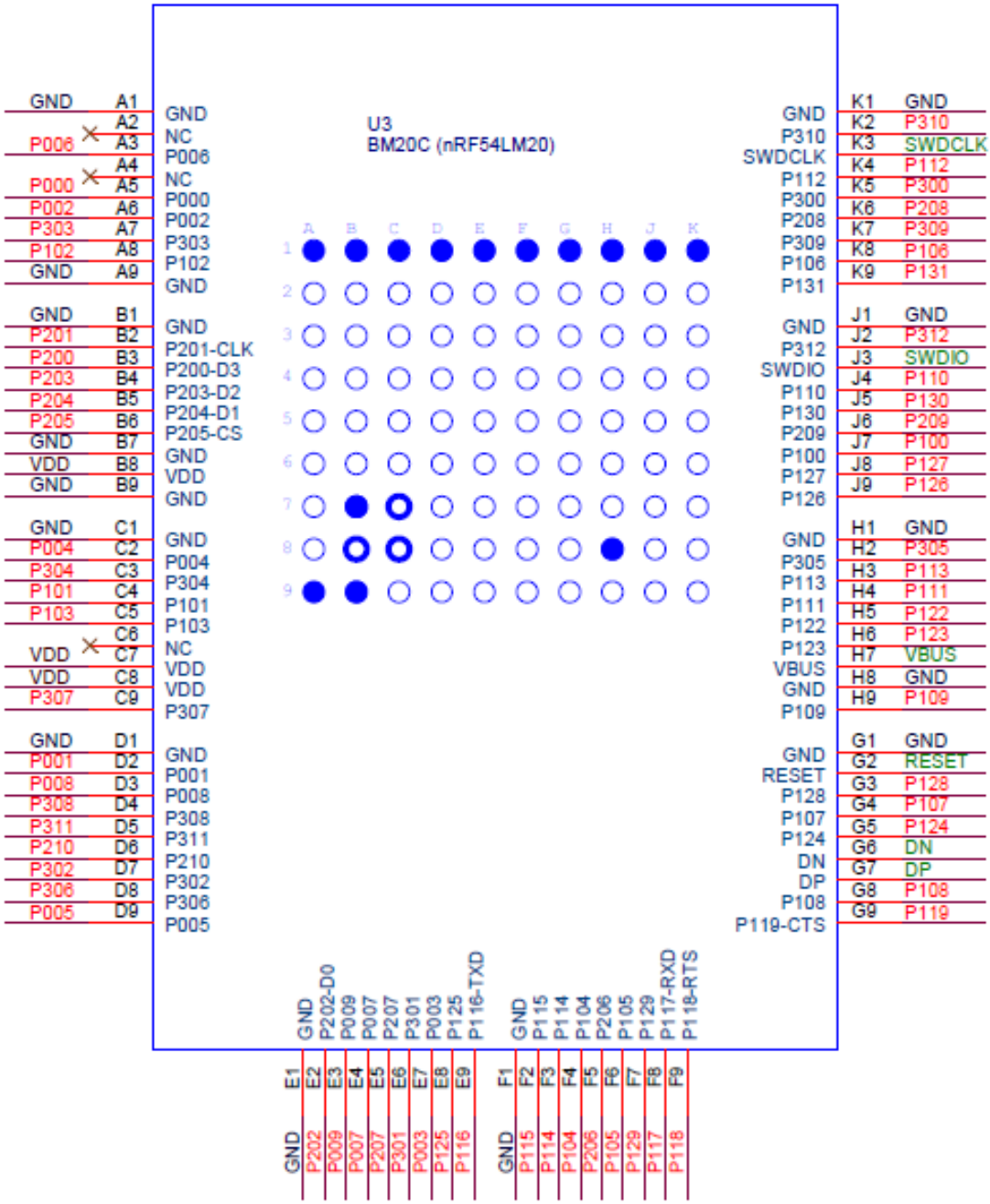

PIN Function BM15C, BM20C, BMH20C

In this section, the following abbreviations are used.

- BM15, an nRF54L15 Bluetooth module representing BM15M, BM15C, BM15E.
- BM20, an nRF54LM20A or nRF54LM20B Bluetooth module representing BM20C, BM20BC, BM20E, BM20BF, BM20M, BM20BP, BM20NE, BM20XE, BM20BNE, BM20BXE.
- BMH20, an nRF54H20 Bluetooth module representing BMH20C, BMH20E, BMH20XE.
- L15, nRF54L15.
- L20, nRF54LM20A or nRF54LM20B.
- H20, nRF54H20.

UART pins of BM15 in EV-BM15 are different from UART pins of BM15 in the EV-BM20 design to accommodate BM15, BM20, and BMH20. Different firmware configuration is required.

BMH20C and BM20C are only partially footprint compatible. The power supply voltages are different. The GPIO pin functions are also different.

Module	L15	BM15	L20	BM20	H20	BMH20	
pin#	pin#	Name		Name	pin#	Name	Descriptions
A1		GND		GND		GND	Ground
A2							No Connect
A3	37	P109	H2	P006	C6	P111	GPIO
A4					A12	VDD-P9	VDD-P9, DC to set operating voltage of port 9. 1.8V or 3.3V.
A5			K3	P000	L12	P601	BM20, GPIO; BMH20, QSPI CKN.
A6			J3	P002	M11	P602	BM20, GPIO; BMH20, QSPI RWDS
A7			H4	P303	L11	P604	BM20, GPIO; BMH20, QSPI D7.
A8			J7	P102	L10	P606	BM20, GPIO; BMH20, QSP D6
A9		GND		GND		GND	Ground
B1		GND		GND		GND	Ground
B2	38	P110	C10	P201-CLK	M12	P600	GPIO; BM20, BMH20 QSPI Clock
B3	39	P111	B10	P200-D3	M8	P609	GPIO, BM15,Analog input AIN4; BM20, BMH20, QSPI D3;
B4	40	P112	E10	P203-D2	L8	P610	GPIO, BM15,Analog input AIN5; BM20, BMH20, QSPI D2;
B5	41	P113	F10	P204-D1	M10	P605	GPIO, BM15,Analog input AIN6, UART TXD in EV-BM15C; BM20, BMH20, QSPI D1
B6	42	P114	G9	P205-CS	K12	P603	GPIO, BM15,Analog input AIN7, UART RXD in EV-BM15C; BM20, BMH20, QSPI CS;
B7	49	GND		GND		GND	Ground
B8	36	VDD	A3	VDD	L4	VDD	BM15, 1.7V to 3.6V; BM20, 1.7V to 3.5V; BMH20, 1.71 to 1.98V.
B9	49	GND		GND		GND	Ground
C1				GND		GND	BM15,NC; BM20, ground;
C2			J1	P004	L9	P608	BM20, GPIO; BMH20, QSPI D5
C3			J4	P304	M7	P611	BM20, GPIO; BMH20, QSPI D4
C4			J6	P101	L7	P612	BM20, GPIO; BMH20, RESET.
C5			H9	P103	K7	P613	BM20, GPIO; BMH20, CS1_CSN

C6				NC	L1	VDDH	BMH20, High voltage power supply, 2.05V to 5.5V.
C7				VDD	A12	VDD	BM20, 1.7 to 3.5V; BMH20, DC power supply 1.71 to 1.98V
C8	48	VDDM	A3	VDD	L4	VDD	BM15, 1.8V to 3.6V; BM20, 1.7V to 3.5V; BMH20, 1.71 to 1.98V.
C9	2	P101	G5	P307	C9	P000	BM15, GPIO, connection for 32.768 kHz crystal; BM20, BMH20, GPIO;
D1		GND		GND		GND	Ground
D2			K2	P001	D11	P001	BM20, BMH20, GPIO.
D3			F3	P008	D10	P002	BM20, BMH20, GPIO.
D4			G4	P308	C10	P905	BM20, BMH20, GPIO
D5			E4	P311	C11	P904	BM20, BMH20, GPIO
D6			F9	P210	B10	P903	BM20, BMH20, GPIO
D7			H5	P302	B11	P902	BM20, BMH20, GPIO.
D8	1	P100	G6	P306	A10	P901	GPIO, BM15, connection for 32.768 kHz crystal
D9	3	P102	H3	P005	K11	P900	GPIO, BM15, NFC pin.
E1		GND		GND		GND	Ground
E2			D10	P202-D0	M9	P607-D0	BM20, BMH20, QSPI D0;
E3			E3	P009	D9	P003	BM20, GPIO
E4			G3	P007	D8	P004	BM20, GPIO
E5			C9	P207	E11	P005	BM20, GPIO
E6			H6	P301	E10	P006	BM20, GPIO
E7			J2	P003	E9	P007	BM20, GPIO
E8	4	P103	E7	P125	F11	P008	BM15, GPIO, NFC pin; BM20, BMH20, GPIO;
E9	5	P104	B3	P116-TXD	J2	P206-TXD	BM15, analog input AIN0, configurable as UART TXD; BM20,BMH20, UART TXD.
F1		GND		GND		GND	Ground
F2			B2	P115	F10	P009	BM20, GPIO;
F3			C2	P114	E4	P102	BM20, GPIO; BMH20, IRQ
F4			J9	P104	B4	P100	BM20, GPIO; BMH20, BUCK-EN
F5			B9	P206	F9	P010	BM20, GPIO;
F6			H8	P105	A6	P109	BM20, GPIO; BMH20, VDDIO_EN
F7			H10	P129	G9	P011	BM20, GPIO;
F8	6	P105	B4	P117-RXD	H2	P204-RXD	BM15,Analog input AIN1, configurable as UART RXD; BM20,BMH20, UART RXD.
F9	7	P106	B5	P118-RTS	K3	P207-RTS	BM15,Analog input AIN2, configurable as UART RTS; BM20, BMH20 UART RTS.
G1				GND		GND	BM15, NC; BM20, BMH20, ground;
G2	30	/Reset	F2	/Reset	L7	/Reset	/Reset, active low.
G3			D8	P128	J11	P706	BM20,BMH20, GPIO
G4			G8	P107	B5	P106	BM20, BMH20, SPI_MISO;
G5			D7	P124	J9	P707	BM20, BMH20 GPIO.
G6			K4	DN	B8	DN	BM20, USB port Data
G7			K5	DP	B7	DP	BM20, USB port Data
G8	9	P108	F8	P108	A5	P107	BM15, BM20, GPIO; BMH20, SPI_Status0
G9	8	P107	B6	P119-CTS	J3	P205-CTS	BM15, GPIO, Analog input AIN3, configurable as UART CTS; BM20, BMH20 UART CTS;

H1				GND		GND	BM15,NC; BM20, ground;
H2	29	P004	G7	P305	H10	P703	GPIO.
H3			C3	P113	B6	P110	BM20,BMH20, GPIO, Status1;
H4			C5	P111	D4	P101	BM20, GPIO; BMH20, SPI-CLK
H5			D6	P122	H9	P704	BM20, GPIO;
H6			B7	P123	J11	P705	BM20, GPIO;
H7			K7	VBUS	A9	VBUS	BM20, BMH20, USB power supply, 5V nominal, 4.4V to 5.5V.
H8	49	GND		GND		GND	Ground
H9	11	P200	E8	P109	D6	P108	BM15, GPIO; BM20, GPIO, REQ; BMH20, REQ
J1				GND		GND	BM15,NC; BM20,BMH20, ground.
J2	28	P003	D4	P312	K1	P209	GPIO
J3	25	SWDIO	G2	SWDIO	G12	SWDIO	Serial Wire Debug data.
J4	23	P000	D5	P110	D5	P104	GPIO; BMH20, SPI_SS.
J5	20	P209	J10	P130	H1	P210	GPIO; BM20, BMH20, NFC_N
J6	18	P207	E9	P209	J1	P211	GPIO; BM20, BMH20, NFC_P
J7	14	P203	K8	P100	G11	P700	GPIO; BM20, BMH20, GPIO.
J8	13	P202	C8	P127	G10	P701	GPIO; BM20, BMH20, GPIO.
J9	12	P201	B8	P126	H11	P702	GPIO; BM20, BMH20, GPIO.
K1				GND		GND	BM15, NC; BM20, BMH20, Ground.
K2	27	P002	F4	P310	F3	P200	GPIO
K3	26	SWDC LK	G1	SWDCL K	F12	SWDCLK	Serial Wire Debug clock
K4	24	P001	C4	P112	E5	P103	GPIO; BMH20, SPI_GRANT
K5	21	P210	H7	P300	G3	P201	GPIO;
K6	19	P208	D9	P208	G2	P202	GPIO;
K7	17	P206	F7	P309	H3	P203	GPIO;
K8	16	P205	J8	P106	C5	P105	GPIO; BM20, BMH20, GPIO, SPI_MOSI.
K9	15	P204	K9	P131	K2	P208	GPIO; BM20, BMH20, GPIO.

Upgrading to BM20NE, BM20XE, WM02C20C

In this section, the following abbreviations are used.

- BM20, an nRF54LM20A or nRF54LM20B Bluetooth module representing BM20C, BM20E, BM20M, BM20P.
- 20NE, an nRF54LM20A/B + nRF21540 PA Bluetooth module representing BM20NE and BM20BNE (nRF54LM20B).
- 20XE, an nRF54LM20A/B + SKY66403 PA Bluetooth module representing BM20XE and BM20BXE (nRF54LM20B).
- WM20, nRF54LM20A/B and nRF7002 WiFi 6 combo module.
- L20, nRF54LM20A or nRF54LM20B.
- 7002, nRF7002 WiFi 6 SoC.

Module	L20	BM20	20NE	20XE	WM20	
pin#		Name	Name	Name	Name	Descriptions
A1		GND		GND	GND	Ground
A2			VDD-PA	VDD-PA		3.3V DC supply for power amplifier.
A3	H2	P006	P006	P006	P006	GPIO
A4						
A5	K3	P000	P000	P000	P000	BM20, GPIO
A6	J3	P002	P002	P002	P002	BM20, GPIO
A7	H4	P303	NC	P303	P303	BM20, GPIO; 20NE, SCK.
A8	J7	P102	NC	NC	P102	BM20, WM20, GPIO; 20XE, NC, internal PA control nCTX; 20NE, TX-EN.
A9		GND	GND	GND	GND	Ground
B1		GND	GND	GND	GND	Ground
B2	C10	P201-CLK	P201-CLK	P201-CLK	P201-CLK	GPIO, QSPI CLK
B3	B10	P200-D3	P200-D3	P200-D3	P200-D3	GPIO, QSPI D3;
B4	E10	P203-D2	P203-D2	P203-D2	P203-D2	GPIO, QSPI D2;
B5	F10	P204-D1	P204-D1	P204-D1	P204-D1	GPIO, QSPI D1
B6	G9	P205-CS	P205-CS	P205-CS	P205-CS	GPIO, QSPI CS;
B7		GND	GND	GND	GND	Ground
B8	A3	VDD	VDD	VDD	VDD	DC power supply 1.7V to 3.5V
B9		GND	GND	GND	GND	Ground
C1		GND	GND	GND	GND	BM15,NC; BM20, ground;
C2	J1	P004	P004	P004	P004	GPIO;
C3	J4	P304	P304	P304	P304	GPIO;
C4	J6	P101	NC	NC	P101	BM20, WM20, GPIO; 20XE, NC, internal PA control, nCHL; 20NE, MODE.
C5	H9	P103	NC	NC	P103	BM20, WM02, GPIO; 20XE, NC, internal PA control, nANT-SEL; 20NE, ANT-SEL.
C6						
C7		VDD	VDD	VDD	VDD	DC power supply, 1.7 to 3.5V;
C8	A3	VDD	VDD	VDD	VDD	DC power supply, 1.7 to 3.5V;

C9	G5	P307	P307	P307	P307	GPIO;
D1		GND	GND	GND	GND	Ground
D2	K2	P001	P001	P001	P001	GPIO.
D3	F3	P008	P008	P008	P008	GPIO.
D4	G4	P308	P308	P308	P308	GPIO.
D5	E4	P311	P311	P311	P311	GPIO.
D6	F9	P210	P210	P210	P210	GPIO.
D7	H5	P302	NC	P302	P302	GPIO. 20NE, CSN.
D8	G6	P306	P306	P306	P306	GPIO.
D9	H3	P005	P005	P005	P005	GPIO.
E1		GND	GND	GND	GND	Ground
E2	D10	P202-D0	P202-D0	P202-D0	P202-D0	GPIO, QSPI D0;
E3	E3	P009	P009	P009	P009	GPIO.
E4	G3	P007	P007	P007	P007	BM20, GPIO
E5	C9	P207	P207	P207	P207	GPIO.
E6	H6	P301	NC	P301	P301	GPIO. 20NE, MISO;
E7	J2	P003	P003	P003	P003	GPIO.
E8	E7	P125	P125	NC	P125	GPIO; 20XE NC, internal PA control, nCDS.
E9	B3	P116-TXD	P116-TXD	P116-TXD	P116-TXD	GPIO, UART TXD.
F1		GND	GND	GND	GND	Ground
F2	B2	P115	NC	NC	P115	GPIO; 20XE, NC internal PA control, nCPS, 20NE, PDN.
F3	C2	P114	P114	P114	NC	GPIO, IRQ; WM20, NC, connected to 7002 IRQ pin internally.
F4	J9	P104	P104	P104	NC	GPIO, BUCK-EN; WM20, connected to 7002 BUCK-EN pin internally.
F5	B9	P206	P206	P206	P206	GPIO.
F6	H8	P105	P105	P105	NC	GPIO, VDDIO_EN; WM20, NC, control TCK127BG to power 7002 internally.
F7	H10	P129	NC	NC	P129	GPIO; 20XE, NC internal PA control, nCRX; 20NE, RX-EN.
F8	B4	P117-RXD	P117-RXD	P117-RXD	P117-RXD	GPIO, UART RXD.
F9	B5	P118-RTS	P118-RTS	P118-RTS	P118-RTS	GPIO, UART RTS.
G1		GND	GND	GND	GND	Ground;
G2	F2	/Reset	/Reset	/Reset	/Reset	/Reset, active low.
G3	D8	P128	P128	P128	P128	GPIO, L-DIO1
G4	G8	P107	P107	P107	NC	GPIO, SPI-MISO; WM20 NC, SPI-MISO to 7002 internally.
G5	D7	P124	P124	P124	P124	GPIO, L-BUSY
G6	K4	DN	DN	DN	DN	USB port Data
G7	K5	DP	DP	DP	DP	USB port Data
G8	F8	P108	P108	P108	NC	GPIO, SPI_Status0; WM20, NC, Status0 to 7002 internally.
G9	B6	P119-CTS	P119-CTS	P119-CTS	P119-CTS	UART CTS;
H1		GND	GND	GND	GND	Ground;
H2	G7	P305	P305	P305	P305	GPIO.
H3	C3	P113	P113	P113	NC	GPIO, SPI-Status1; WM20, NC, Status1 to 7002 internally.

H4	C5	P111	P111	P111	P111	GPIO, SPI-CLK; WM20, NC, SPI-CLK to 7002 internally.
H5	D6	P122	P122	P122	P122	GPIO;
H6	B7	P123	P123	P123	P123	GPIO;
H7	K7	VBUS	VBUS	VBUS	VBUS	USB power supply, 5V nominal, 4.4V to 5.5V.
H8		GND	GND	GND	GND	Ground
H9	E8	P109	P109	P109	NC	GPIO, REQ; WM20, NC, REQ to 7002 internally.
J1		GND	GND	GND	GND	Ground.
J2	D4	P312	P312	P312	P312	GPIO;
J3	G2	SWDIO	SWDIO	SWDIO	SWDIO	Serial Wire Debug data.
J4	D5	P110	P110	P110	NC	GPIO; WM20, NC, SPI-SS to 7002 internally.
J5	J10	P130	P130	P130	P130	GPIO, NFC_N
J6	E9	P209	P209	P209	P209	GPIO, NFC_P
J7	K8	P100	P100	P100	P100	GPIO;
J8	C8	P127	P127	P127	P127	GPIO;
J9	B8	P126	P126	P126	P126	GPIO;
K1		GND	GND	GND	GND	Ground.
K2	F4	P310	P310	P310	P310	GPIO;
K3	G1	SWDCLK	SWDCLK	SWDCLK	SWDCLK	Serial Wire Debug clock
K4	C4	P112	P112	P112	NC	GPIO; WM20, NC, GRANT to 7002 internally.
K5	H7	P300	NC	P300	P300	GPIO; 20NE, MOSI.
K6	D9	P208	P208	P208	P208	GPIO;
K7	F7	P309	P309	P309	P309	GPIO;
K8	J8	P106	P106	P106	NC	GPIO, SPI_MOSI. WM20, NC, SPI-MOSI to 7002 internally.
K9	K9	P131	P131	P131	P131	GPIO;

Mounting BM20C on the Host PCB

BM20C or BM20M with an integrated antenna is referred as BM20C in this section. It shall follow these mounting

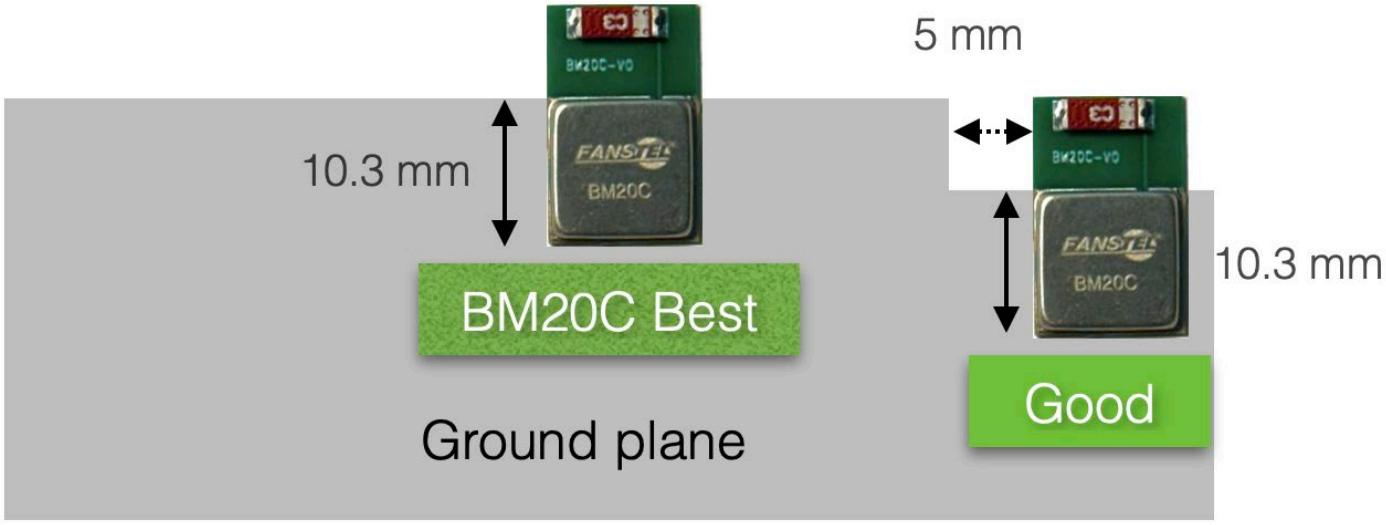

guidelines. There is no mounting restriction for BM20E with an u.FL connector.

The length of the RFI shield is 10.3 mm. The RFI shield area is the main body of module. The rest of the module is called antenna area.

- The main body area can be on a host board ground plane. The antenna area must be extended outside of the host board or in an area without ground or signal trace.
- The length of BM20C antenna area is 5.5 mm.
- The length of BM20M antenna area is 3.7mm.
- We don’t recommend mounting BM20C module in the middle of a host PCB.

For the best Bluetooth range performance, keep all external metal at least 30mm from the antenna area.

Suggestion for Battery Power Application

Standby current consumption is important for battery-powered product. Both 32 MHz and 32 KHz crystals are embedded. Inductors required for DCDC converter are inside BM20C module. You can enable DCDC to lower power consumption.

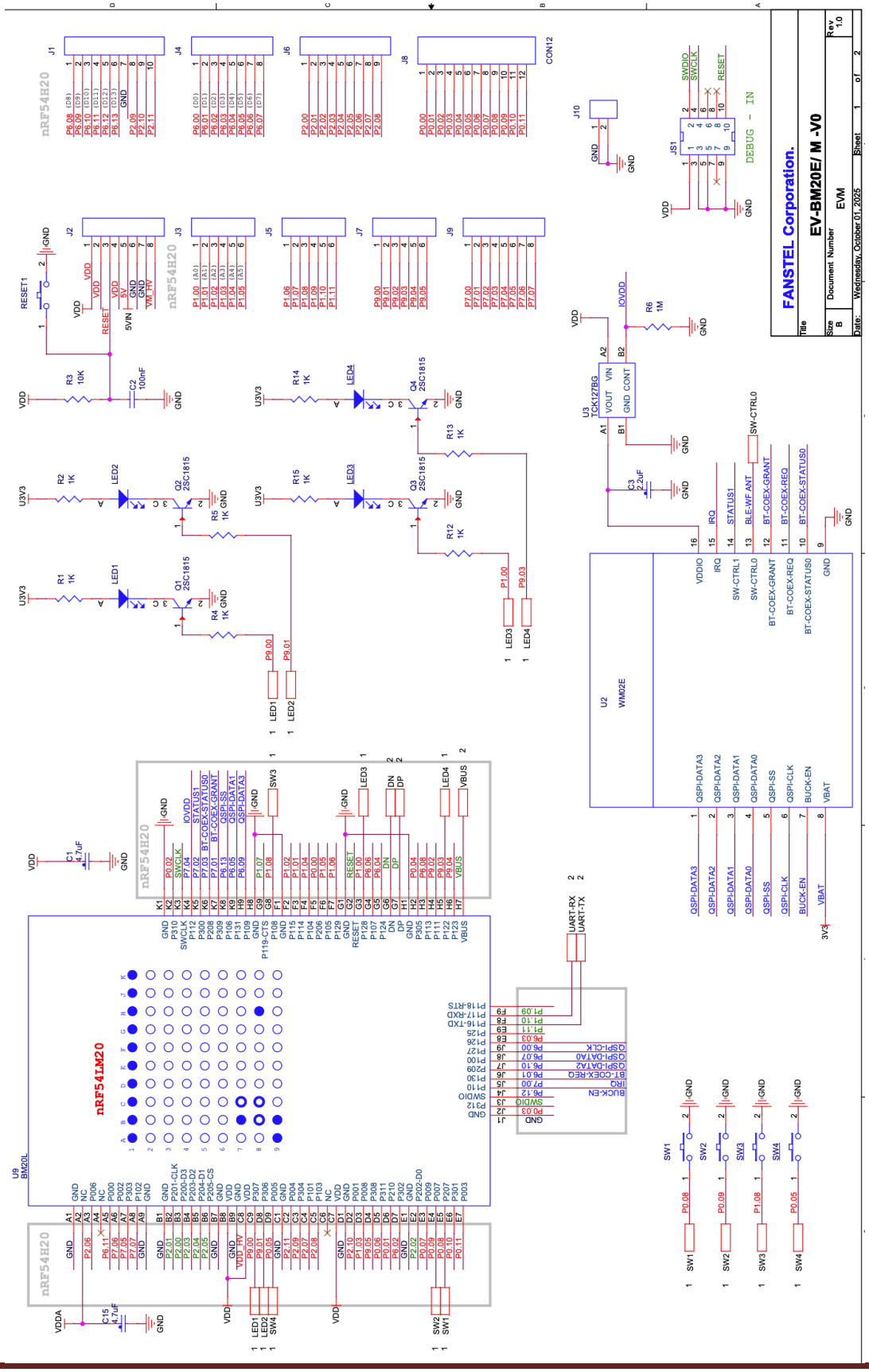
FANSTEL Corporation.
EV-BM20E/ M -V0
Document Number
EVM
Wednesday, October 01, 2025
nRF54H20
nRF54LM20
WM02E
TCK127BG
DEBUG - IN

Page 2 of EV-BM20C

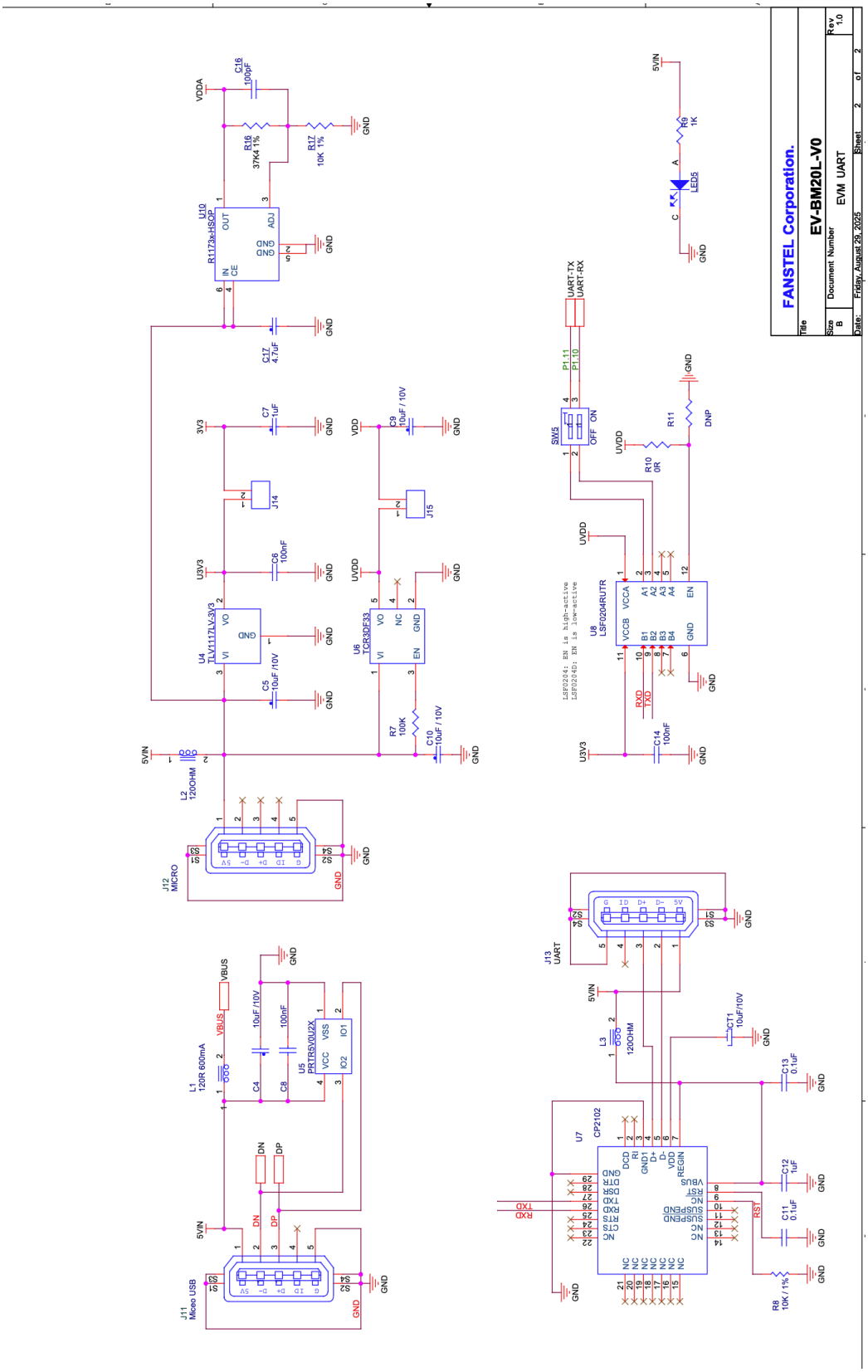

Evaluation Board

EV-BM20BC consists of the following:

- An evaluation board with BM20BC module and WM02C, an nRF7002 WiFi 6 module.
- A 10-pins flat cable for connection to nRF54LM20 DK.
- An USB cable.
- An nRF54LM20B module is used in all evaluation board. Don’t use the Axon NPU if you use an nRF54LM20A module.

3. Firmware Development

An evaluation board can be used to evaluate performance of module and to develop and test your firmware before an application-specific host board is developed.

Loading Firmware into Evaluation Board Through a Nordic DK

A Nordic nRF54LM20A PDK or DK is required to load firmware into EV-BM20C.

```
C:\Users\USER\Desktop\Nordic_Firmware\BT54LM20_250825>nrfutil device recover
v Recovered 1051820693
C:\Users\USER\Desktop\Nordic_Firmware\BT54LM20_250825>nrfutil device x-execute-batch --batch-path generated_nrfutil_batc
h.json --serial-number 1051820693
[00:00:04] ###### 100% [2/2 1051820693] Batch completed
C:\Users\USER\Desktop\Nordic_Firmware\BT54LM20_250825>
```

Procedures to connect a Nordic DK to a Fanstel nRF54 module evaluation board.

- Connect Nordic nRF54LM20A DK debug out to Fanstel evaluation board debug in using the 10-pin flat cable as shown below.
- Connect Nordic nRF54LM20A DK to PC.

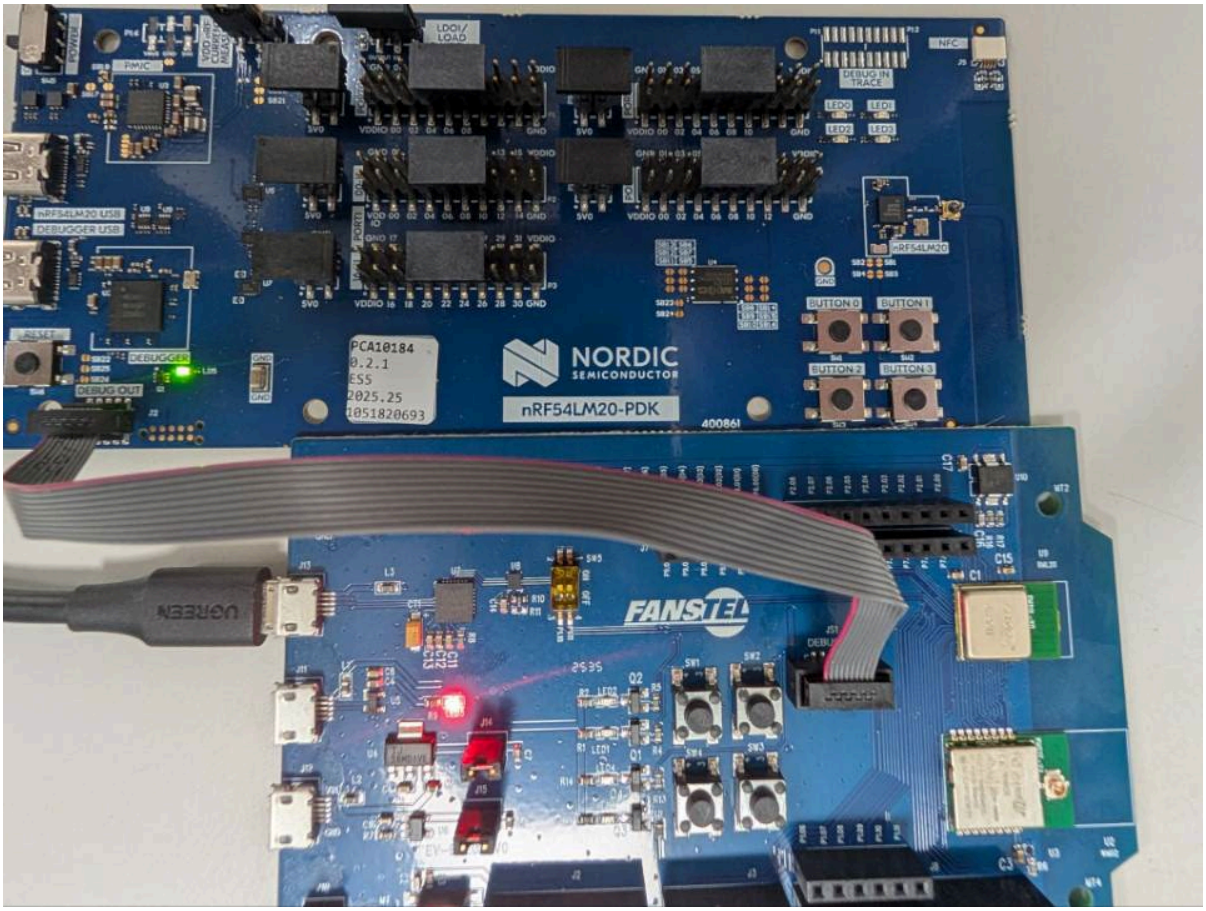

- Connect a DC power source to micro or mini USB port of evaluation board.

Procedures to Load Firmware

Open a command line tool and execute the programming commands:
nrfutil device recover
nrfutil device x-execute-batch --batch-path generated_nrfutil_batch.json --serial-number 1051820693
Note: The JSON file is generated in the build folder, and the serial number should match the DK's serial number. You can use the command `nrfutil device list` to check available serial numbers.

Setting Up Firmware Development Environment
Please use nRF Connect SDK version 3.3.0 or newer for development. Older versions do not support the BM20C.

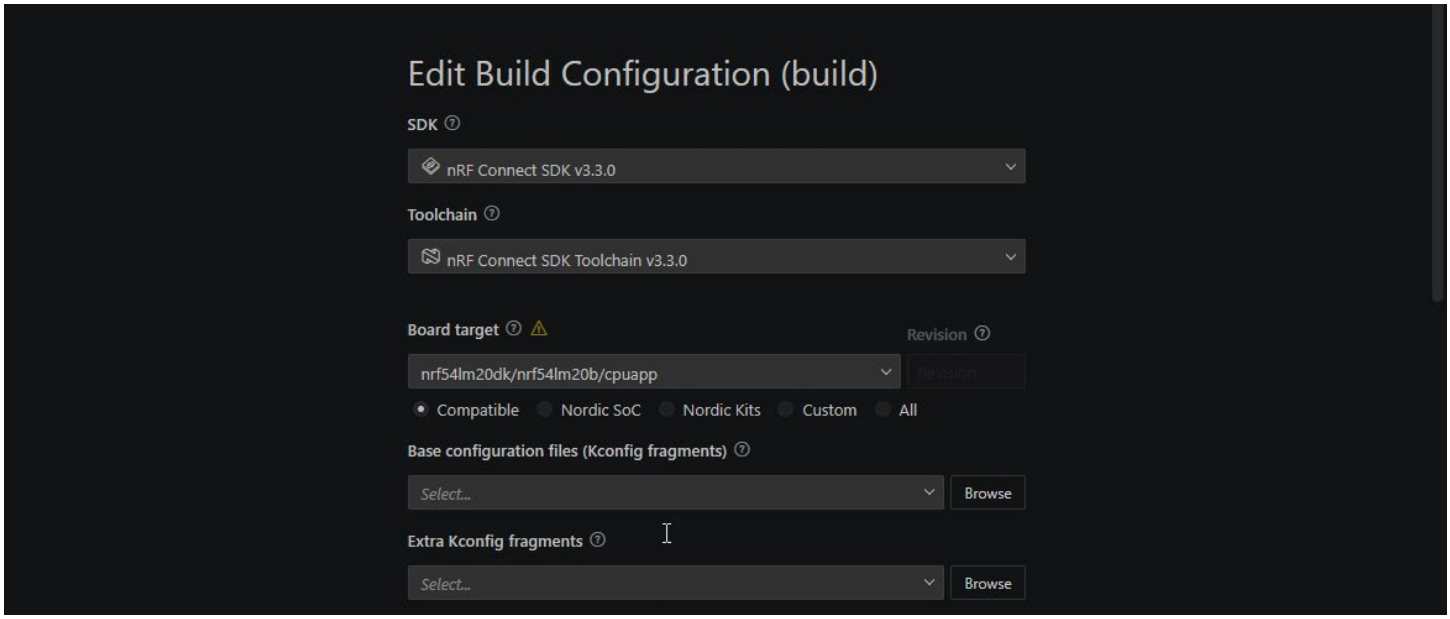

Select the board: ***nrf54lm20dk/nrf54l20a/cupapp*** (nRF54LM20 silicon).

Create an overlay file to configure hardware peripherals according to your specific setup. For example, you can create an

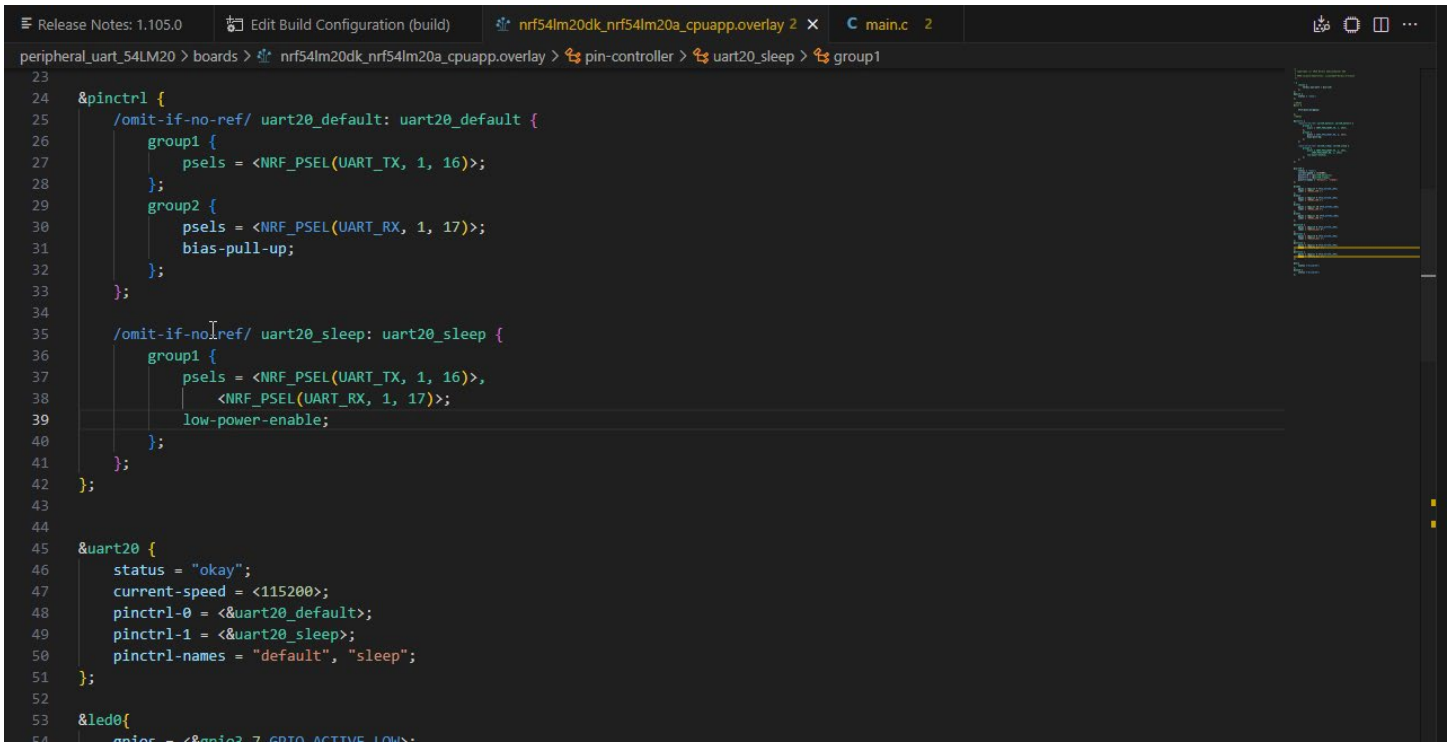

nrf54lm20dk/nrf54l20a.overlay file with the necessary configuration.
The example overlay for Wi-Fi.
Extra CMake arguments:-DSHIELD=nrf7002eb2
overlay:

```
&pinctrl {
   spi22_default: spi22_default {
      group1 {
         psels = <NRF_PSEL(SPIM_MOSI, 1, 6)>,
               <NRF_PSEL(SPIM_MISO, 1, 7)>,
               <NRF_PSEL(SPIM_SCK, 1, 11)>;
      };
   };

   spi22_sleep: spi22_sleep {
      group1 {
         psels = <NRF_PSEL(SPIM_MOSI, 1, 6)>,
               <NRF_PSEL(SPIM_MISO, 1, 7)>,
               <NRF_PSEL(SPIM_SCK, 1, 11)>;
         low-power-enable;
      };
   };
};

&spi22 {
   status = "okay";
   pinctrl-0 = <&spi22_default>;
   pinctrl-1 = <&spi22_sleep>;
   pinctrl-names = "default", "sleep";
```

```
    cs-gpios = <&gpio1 10 GPIO_ACTIVE_LOW>;

    nrf70: nrf7002-spi@0 {
        compatible = "nordic,nrf7002-spi";
        reg = <0>;
        spi-max-frequency = <8000000>;
        status = "okay";

        /* Manually specify required GPIOs to satisfy compiler requirements  */
        host-irq-gpios   = <&gpio1 14 GPIO_ACTIVE_HIGH>;
        bucken-gpios     = <&gpio1 4 GPIO_ACTIVE_HIGH>;
        iovdd-ctrl-gpios = <&gpio1 5 GPIO_ACTIVE_HIGH>;

        /* Custom power configurations */
        wifi-max-tx-pwr-2g-dsss = <0x15>;
        wifi-max-tx-pwr-2g-mcs0 = <0x10>;
        wifi-max-tx-pwr-2g-mcs7 = <0x10>;
    };
};

&wlan0 {
    status = "okay";
};
```

```
* Executing task: nRF Connect: Build: peripheral_uart_54LM20/build (active)

Building peripheral_uart_54LM20
west build --build-dir c:/Nordic_Jobs/JobsV310/peripheral_uart_54LM20/build c:/Nordic_Jobs/JobsV310/peripheral_uart_54LM20

[0/5] Performing build step for 'peripheral_uart_54LM20'
[7/7] Linking C executable zephyr\zephyr.elf
Memory region         Used Size  Region Size  %age Used
           FLASH:      228820 B      2028 KB     11.02%
             RAM:       38800 B       511 KB      7.41%
        IDT_LIST:          0 GB        32 KB      0.00%
Generating files from C:/Nordic_Jobs/JobsV310/peripheral_uart_54LM20/build/peripheral_uart_54LM20/zephyr/zephyr.elf for board: nrf54lm20dk
[5/5] Generating ../merged.hex
* Terminal will be reused by tasks, press any key to close it.

* Executing task: nRF Connect: Flash: peripheral_uart_54LM20/build (active)

Flashing build to nRF54LM20 DK
west flash -d c:\Nordic_Jobs\JobsV310\peripheral_uart_54LM20\build --dev-id 1051820693

-- west flash: rebuilding
[0/5] Performing build step for 'peripheral_uart_54LM20'
ninja: no work to do.
[4/5] cmd.exe /C "cd /D C:\Nordic_Jobs\JobsV310\peripheral_uart_54LM20\build\_sysbuild && C:\ncs\toolchains\b8b84efebd\opt\bin\cmake.exe -E true"
-- west flash: using runner nrfutil
-- runners.nrfutil: reset after flashing requested
-- runners.nrfutil: Flashing file: C:\Nordic_Jobs\JobsV310\peripheral_uart_54LM20\build\merged.hex
-- runners.nrfutil: Programming image
-- runners.nrfutil: Verifying image
-- runners.nrfutil: Reset
-- runners.nrfutil: Board(s) with serial number(s) 1051820693 flashed successfully.
* Terminal will be reused by tasks, press any key to close it.

Ln 605, Col 1   Tab Size: 4   UTF-8   LF   {} C   Win
```

After completing the setup, build and flash the code, then verify that it is running correctly.

Preloaded Firmware

Production test codes are not erased when modules are shipped from factory. Before using the modules, please use the following command to erase the preprogrammed codes.

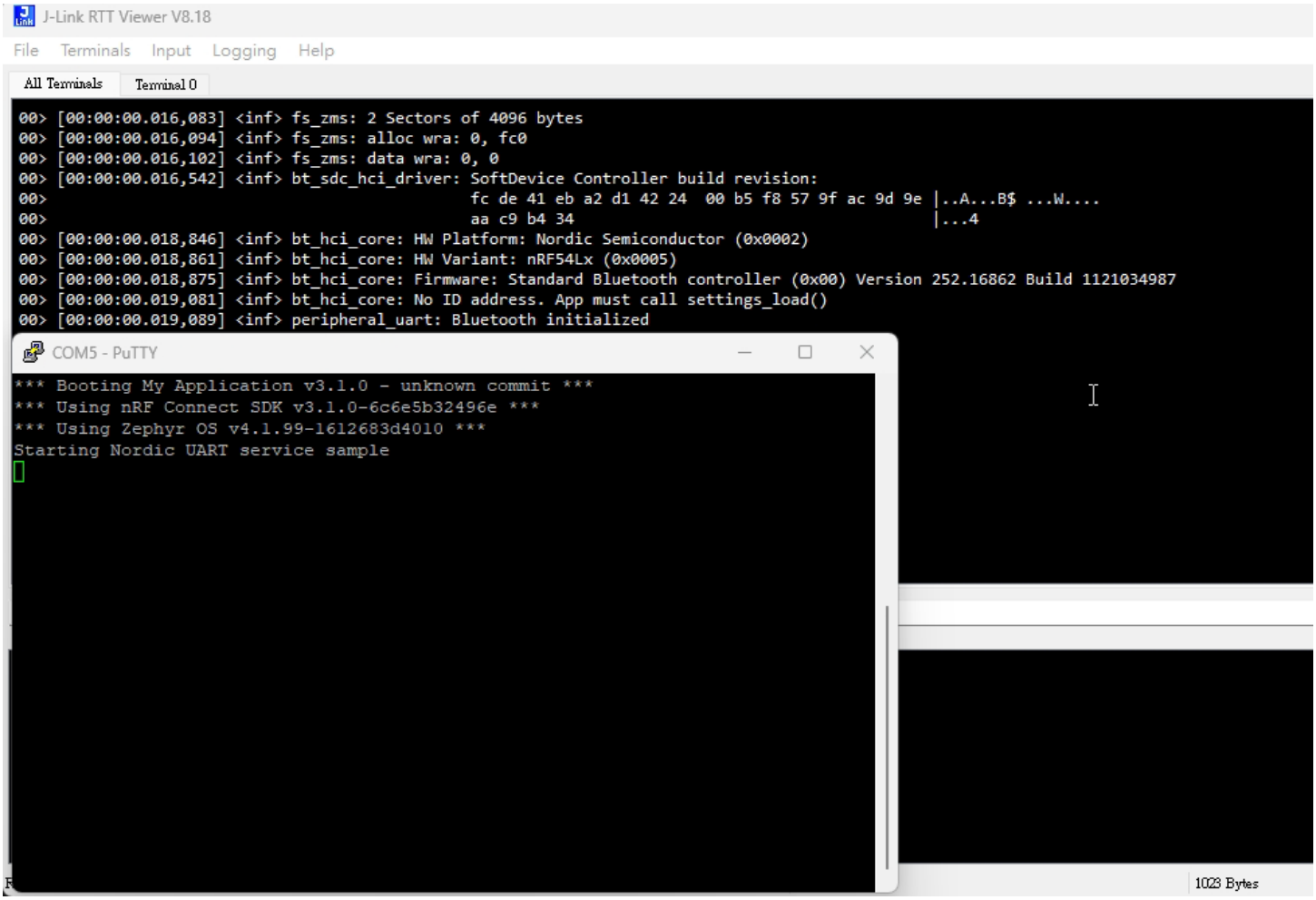

nrfutil device recover

4. Miscellaneous

Soldering Temperature-Time Profile for Re-Flow Soldering

Maximum number of cycles for re-flow is 2. No opposite side re-flow is allowed due to module weight.

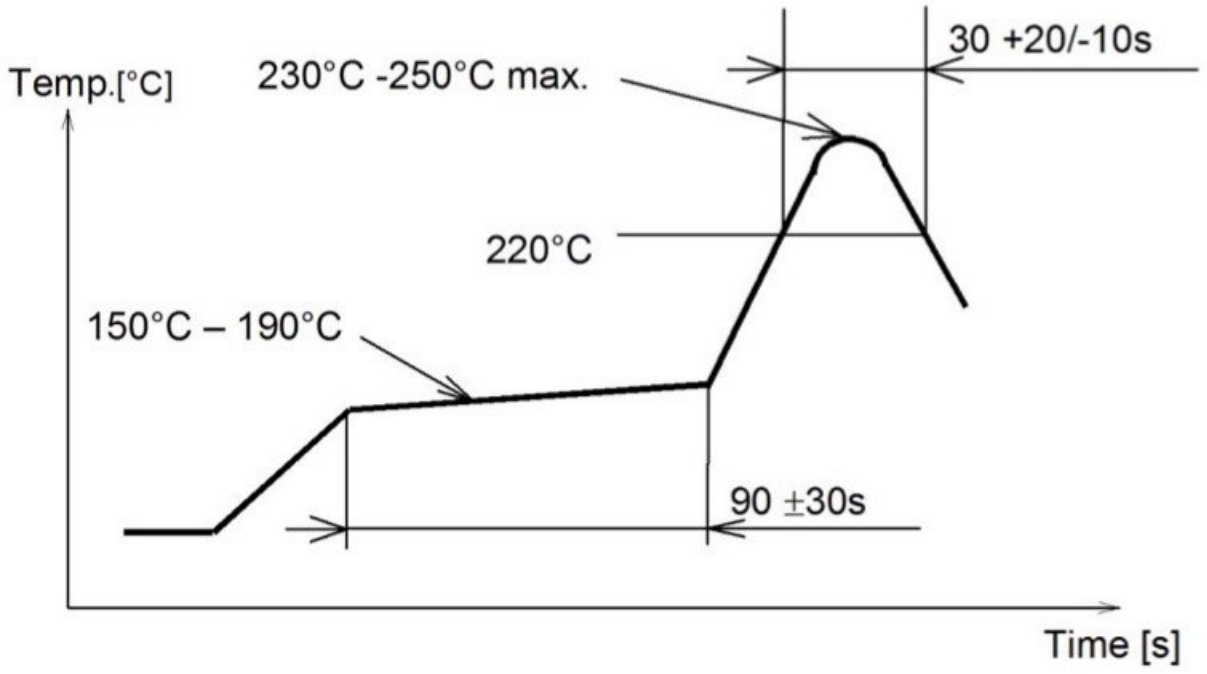

Cautions, Design Notes, and Installation Notes

Failure to follow the guidelines set forth in this document may result in degrading of the product's functions and damage to the product.

Design Notes

(1) Follow the conditions written in this specification, especially the control signals of this module.

(2) The supply voltage has to be free of AC ripple voltage (for example from a battery or a low noise regulator output). For noisy supply voltages, provide a decoupling circuit (for example a ferrite in series connection and a bypass capacitor to ground of at least 47uF directly at the module).

(3) This product should not be mechanically stressed when installed.

(4) Keep this product away from heat. Heat is the major cause of decreasing the life of these products.

(5) Avoid assembly and use of the target equipment in conditions where the products' temperature may exceed the maximum tolerance.

(6) The supply voltage should not be exceedingly high or reversed. It should not carry noise and/or spikes.

(7) this product away from other high frequency circuits.

Notes on Antenna and PCB Layout

(1) Don't use a module with internal antenna inside a metal case.

(2) For PCB layout:

- Avoid running any signal line below module whenever possible,
- No ground plane below antenna,
- If possible, cut-off the portion of main board PCB below antenna.

Installation Notes

(1) Reflow soldering is possible twice based on the time-temperature profile in this data sheets. Set up the temperature at the soldering portion of this product according to this reflow profile.

(2) Carefully position the products so that their heat will not burn into printed circuit boards or affect the other components that are susceptible to heat.

(3) Carefully locate these products so that their temperatures will not increase due to the effects of heat generated by neighboring components.

(4) If a vinyl-covered wire comes into contact with the products, then the cover will melt and generate toxic gas, damaging the insulation. Never allow contact between the cover and these products to occur.

(5) This product should not be mechanically stressed or vibrated when reflowed.

(6) If you want to repair your board by hand soldering, please keep the conditions of this chapter.

(7) Do not wash this product.

(8) Refer to the recommended pattern when designing a board.

(9) Pressing on parts of the metal cover or fastening objects to the metal will cause damage to the unit.

(10) For more details on LGA (Land Grid Array) soldering processes refer to the application note.

Usage Condition Notes

(1) Take measures to protect the unit against static electricity. If pulses or other transient loads (a large load applied in a short time) are applied to the products, check and evaluate their operation before assembly on the final products.

(2) Do not use dropped products.

(3) Do not touch, damage or soil the pins.

(4) Follow the recommended condition ratings about the power supply applied to this product.

(5) Electrode peeling strength: Do not add pressure of more than 4.9N when soldered on PCB

(6) Pressing on parts of the metal cover or fastening objects to the metal cover will cause damage.

(7) These products are intended for general purpose and standard use in general electronic equipment, such as home appliances, office equipment, information and communication equipment.

Storage Notes

(1) The module should not be stressed mechanically during storage.

(2)Do not store these products in the following conditions or the performance characteristics of the product, such as RF performance will be adversely affected:

- Storage in salty air or in an environment with a high concentration of corrosive gas.
- Storage in direct sunlight
- Storage in an environment where the temperature may be outside the range specified.
- Storage of the products for more than one year after the date of delivery storage period.

(3) Keep this product away from water, poisonous gas and corrosive gas.

(4) This product should not be stressed or shocked when transported.

(5) Follow the specification when stacking packed crates (max. 10).

Safety Conditions

These specifications are intended to preserve the quality assurance of products and individual components. Before use, check and evaluate the operation when mounted on your products. Abide by these specifications, without deviation when using the products. These products may short-circuit. If electrical shocks, smoke, fire, and/or accidents involving human life are anticipated when a short circuit occurs, then provide the following failsafe functions, as a minimum.

(1)Ensure the safety of the whole system by installing a protection circuit and a protection device.

(2)Ensure the safety of the whole system by installing a redundant circuit or another system to prevent a dual fault causing an unsafe status.

Other Cautions

(1)This specification sheet is copyrighted. Reproduction of this data sheets is permissible only if reproduction is without alteration and is accompanied by all associated warranties, conditions, limitations, and notices.

(2)Do not use the products for other purposes than those listed.

(3)Be sure to provide an appropriate failsafe function on your product to prevent an additional damage that may be caused by the abnormal function or the failure of the product.

(4)This product has been manufactured without any ozone chemical controlled under the Montreal Protocol.

(5)These products are not intended for other uses, other than under the special conditions shown below. Before using these products under such special conditions, check their performance and reliability under the said special conditions carefully to determine whether or not they can be used in such a manner.

- In liquid, such as water, salt water, oil, alkali, or organic solvent, or in places where liquid may splash.
- In direct sunlight, outdoors, or in a dusty environment
- In an environment where condensation occurs.
- In an environment with a high concentration of harmful gas.

(6) If an abnormal voltage is applied due to a problem occurring in other components or circuits, replace these products with new products because they may not be able to provide normal performance even if their electronic characteristics and appearances appear satisfactory.

(7) When you have any question or uncertainty, contact Fanstel.

Packaging

Production modules are delivered in reel, 1000 modules in each reel.

FCC Label

The Original Equipment Manufacturer (OEM) must ensure that the OEM modular transmitter must be labeled with its own FCC ID number. This includes a clearly visible label on the outside of the final product enclosure that displays the contents shown below. If the FCC ID is not visible when the equipment is installed inside another device, then the outside of the device into which the equipment is installed must also display a label referring to the enclosed equipment

The end product with this module may subject to perform FCC part 15 unintentional emission test requirement and be properly authorized.

This device is intended for OEM integrator only.

5. Revision History

- Dec. 2025, Ver. 0.51: The initial draft specs release.
- March 2026, Ver 0.80: Draft revision.
- May 2026, Ver 0.81: Add upgrading information to BM20NE and BM20XE Series.

6.Contact Us

Fanstel Corp.
7466 E. Monte Cristo Ave. Scottsdale AZ 85260
Tel. 1 480-948-4928
Fax. 1-480-948-5459
Email: info@fanstel.com
Website: www.fanstel.com

Taiwan:

Fanstel Corp.
10F-10, 79 Xintai Wu Road
Xizhu, New Taipei City, Taiwan 22101
泛世公司
臺灣省新北市汐止區新臺五路 79 號 10 樓之 10, 22101
Tel. 886-2-2698-9328
Fax. 886-2-2698-4813
Email: info@fanstel.com
Website: www.fanstel.com

China:

Fanstel Technologies Corp.
11 Jiale Street
Ping-Dih, Long-Gang, Shen Zhen, GD 518117
泛世康科技(深圳)有限公司
廣東省深圳市龍崗區坪地鎮佳樂街 11 號
Tel. 86-755-8409-0928
Fax. 86-755-8409-0973
QQ. 3076221086
Email: info@fanstel.com
Website: www.fanstel.com

Federal Communications Commission (FCC) Statement

15.21

You are cautioned that changes or modifications not expressly approved by the part responsible for compliance could void the user's authority to operate the equipment.

15.105(b)

This equipment has been tested and found to comply with the limits for a Class B digital device, pursuant to part 15 of the FCC rules. These limits are designed to provide reasonable protection against harmful interference in a residential installation. This equipment generates, uses and can radiate radio frequency energy and, if not installed and used in accordance with the instructions, may cause harmful interference to radio communications.

However, there is no guarantee that interference will not occur in a particular installation. If this equipment does cause harmful interference to radio or television reception, which can be determined by turning the equipment off and on, the user is encouraged to try to correct the interference by one or more of the following measures:

-Reorient or relocate the receiving antenna.

-Increase the separation between the equipment and receiver.

-Connect the equipment into an outlet on a circuit different from that to which the receiver is connected.

-Consult the dealer or an experienced radio/TV technician for help.

This device complies with Part 15 of the FCC Rules. Operation is subject to the following two conditions:

1) this device may not cause harmful interference, and

2) this device must accept any interference received, including interference that may cause undesired operation of the device.

FCC RF Radiation Exposure Statement

The antenna(s) used for this transmitter must be installed to provide a separation distance of at least 20 cm from all persons and must not be co-located or operating in conjunction with any other transmitter, except in accordance with FCC multi-transmitter product procedures.

This equipment should be installed.

Note: The end product shall has the words "Contains Transmitter Module FCC ID: **X8WBM20C**

Canada, Industry Canada (IC)
This Class B digital apparatus complies with Canadian ICES-003
Cet appareil numérique de classe B est conforme à la norme NMB-003.
This device complies with Industry Canada licence-exempt RSS standard(s). *Operation is subject to the following two conditions: (1) this device may not cause interference, and (2) this device must accept any interference, including interference that may cause undesired operation of the*
Le present appareil est conforme aux CNR d'Industrie Canada applicables auxappareils radio exempts de licence.L'exploitation est autorisée aux deux conditions suivantes:
(1) l'appareil ne doit pas produire de brouillage, et
(2) l'utilisateur de l'appareil doit accepter tout brouillage adioélectrique subi, même si le brouillage est susceptible d'en compromettre le fonctionnement.

Conformité des appareils de radiocommunication aux limites d'exposition humaine aux radiofréquences (CNR-102)
L'ordinateur utilise des antennes intégrales à faible gain qui n'émettent pas un champ électromagnétique supérieur aux normes imposées par Santé Canada pour la population. Consultez le Code de sécurité 6 sur le site Internet de Santé Canada à l'adresse suivante : http://www.hc-sc.gc.ca/
L'énergie émise par les antennes reliées aux cartes sans fil respecte la limite d'exposition aux radiofréquences telle que définie par Industrie Canada dans la clause 4.1 du document CNR-102, version 4.

Caution: Exposure to Radio Frequency Radiation.
L'antenne ou les antennes utilisées pour cet émetteur doivent être installées de manière à assurer une distance de séparation d'au moins 20 cm par rapport à toutes les personnes et ne doivent pas être situées à proximité ou fonctionner en conjonction avec un autre émetteur, sauf conformément aux procédures de la FCC relatives aux produits multi-émetteurs. Cet équipement doit être installé.

(Modular approval) End Product Labeling:
The final end product must be labeled in a visible area with the following: “Contains IC: **4100A-BM20C**
Le produit final doit être étiqueté dans une zone visible avec ce qui suit “Contient IC : **4100A-BM20C**

OEM statement
The Original Equipment Manufacturer (OEM) must ensure that the OEM modular transmitter must be labeled with its own FCC ID number. This includes a clearly visible label on the outside of the final product enclosure that displays the contents shown below. If
the FCC ID is not visible when the equipment is installed inside another device, then the outside of the device into which the equipment is installed must also display a label referring to the enclosed equipment.
The end product with this module may subject to perform FCC part 15B unintentional emission test requirement and be properly authorized while installation to host(s), and platform, and integrator are obligated to have its manual or instruction with the related compliance warning to end users.
This device is intended for OEM integrator only

The end product with this module may be subject to re-evaluate RF exposure as per 47CFR §

2.1091, and §2.1093 if antenna or usage, including co-located usage of other transmitters, of the subsequent

installation are changed.

This radio transmitter has been approved by FCC/Innovation, Science and Economic Development Canada to operate with the antenna types listed below, with the maximum permissible gain indicated. Antenna types not included in this list that Have a gain greater than the maximum gain indicated for any type listed are strictly prohibited for use with this device.
F-PCB antennas: 4.31 dBi M-PCB antennas: -1.72 dBi
Cet émetteur radio a été approuvé par FCC/Innovation, Science et Développement économique Canada pour fonctionner avec les types d'antennes répertoriés ci-dessous, avec le gain maximal autorisé indiqué. Les types d'antenne non inclus dans cette liste qui ont un gain supérieur au gain maximum indiqué pour tout type répertorié sont strictement interdits pour une utilisation avec cet appareil.
F-PCB antennas: 4.31 dBi M-PCB antennas: -1.72 dBi

NCC 警語:

低功率產品警語：「取得審驗證明之低功率射頻器材，非經核准，公司、商號或使用者均不得擅自變更頻率、加大功率或變更原設計之特性及功能。低功率射頻器材之使用不得影響飛航安全及干擾合法通信；經發現有干擾現象時，應立即停用，並改善至無干擾時方得繼續使用。前述合法通信，指依電信管理法規定作業之無線電通信。低功率射頻器材須忍受合法通信或工