Bluetooth Low Energy(BLE) 5 Module BT840F Ver 0.91 Nov. 2017

BluNor BT840F is a powerful, highly flexible, ultra low power Bluetooth Low Energy (BLE) using Nordic nRF52840 SoC. With an ARMCortex™ M4F MCU, available 1MB flash, 256KB RAM, embedded 2.4GHz multi-protocol transceiver, and an integrated PCB trace antenna or u.FL connector for an external +6dBi antenna. It allows faster time to market with reduced development cost.

For applications needing limited number of IO pins, prototyping and production are easier using 16 castellated pins. Additional 45 LGA (Land Grid Array) pins provide full access to 48 GPIOs of nRF52840.

BT840F hasan ARM® TrustZone® CryptoCell-310co-processor for implementation of IoT security.

Specifications:

- Nordic nRF52840 with ARM Cortex M4F, 64 MHz
- ARM® TrustZone® Cryptocell-310 co-processor
- Complete RF solution with integrated antenna
- Bluetooth 5 data rate: 2Mbps, 1Mbps, 500kbps, 125kbps.
- IEEE 802.15.4 Thread and Zigbee data rate: 250 Kbps
- 2.4 GHz proprietary data rate: 2 Mbps, 1 Mbps
- Integrated DC-DC converter, inductors on board.
- Direct powered by Lithium batteries or USB supply (up to 5.5V)
- Serial Wire Debug (SWD)
- Nordic SoftDevice Ready
- Over-the-Air (OTA) firmware update
- Flash/RAM: 1MB/256KB.
- 48 General purpose I/O pins
- USB 2.0 full speed (12 Mbps) controller
- QSPI 32 MHz interface
- High speed 32 MHz SPI
- Programmable peripheral interconnect (PPI)
- 12 bit/200 Ksps ADC, 8 configurable channels with programmable gain
- 64 level comparator
- 15 level comparator with wake-up from OFF mode
- Temperature sensor
- 4x4-channel pulse width modulator (PWM)
- Audio peripherals: I2S, digital microphone interface (PDM)
- 5 x 32 bit timers with counter mode
- Up to 4x SPI masters/3x SPI slaves
- Up to 2x I2C compatible 2-wire masters/slaves
- 2x UART (CTS/RTS)
- Quadrature Demodulator (QDEC)
- 3x real time counters (RTC)
- 128-bit AES HW encryption
- SoC Receiver Sensitivity: -96 dBm at 1Mbps
- SoC TX power: programmable +8dBm to -20dBm. Up to +6 dBi antenna gain.
- Hybrid pins: 16 castellated and 45 LGA.
- Integrated PCB trace antenna or u.FL connector
- Operation voltage: 1.7V to 5.5V
- Operation temperature: -40°C to +85°C

Applications

- Secure IoT
- Wearable
- Beacons/Proximity
- Connected appliances
- Lighting products
- Sensors
- Home and building automation
- Wrist watches

Model Summaries

module	BT840F	BT840	BT840E	BT840H
SoC	nRF52840-QIAA	nRF52840-QIAA	nRF52840-QIAA	nRF52840-QIAA
Size	15x20.8x1.9mm	14x16x1.9mm	14x16x1.9mm	14x16x1.9mm
BT Antenna	F-PCB ANT	L-PCB ANT	u.FL	MHF4
BT Antenna Gain	0.34dBi	-3.52dBi	6dBi	6dBi
BT range at 1Mbps	510 meters	180 M, estimated		
BT range at 125 Kbps	930 meters		>1000 M	>1000 M
FCC ID				
Canada IC ID				
Europe				

Table Of Contents

1. Introduction 3
BT840F Block Diagram 3
BT840F 3
BT840 4
BT840E 4
2. Codes Development Using Nordic Tools 5
Easy, fast and safe code development 5
Over-The-Air DFU 5
SoftDevices 5
Development Tools 5
3. Product Descriptions 6
Block Diagram of nRF52840 6
ARM Trustzone CryptoCell 310 8
Mechanical Drawings 10
Pin Assignments of BT840 11
Pin Function 14
Mounting BT840F on the Host PCB 15
Host Board Design for Low Cost or Long Range 16
4. BT840F Evaluation Board 17
Communicating with a PC 17
EV BT840F V4 EvaluationBoard Schematics 18
Suggestion for Battery Power Application 19
5. Miscellaneous 20
Soldering Temperature-Time Profile for Re-Flow Soldering 20
Cautions, Design Notes, and Installation Notes 20
Packaging 23
FCC Label 23

1. Introduction

BluNor BT840F Series are powerful, highly flexible, ultra low power wireless modules using Nordic nRF52840 SoCs. With an ARMCortex™ M4F MCU, 1MB flash, 256KB RAM, embedded 2.4GHz multi-protocol transceiver, and an integrated antenna, it allows faster time to market with reduced development cost.

The following is a block diagram of BT840F. Antenna circuit and main clock are integrated. All 48 GPIOs of nRF52840 can be accessed from main board. For lower power consumption at idle state, a 32.768 kHz crystal can be added on the host board.

BT840F Block Diagram

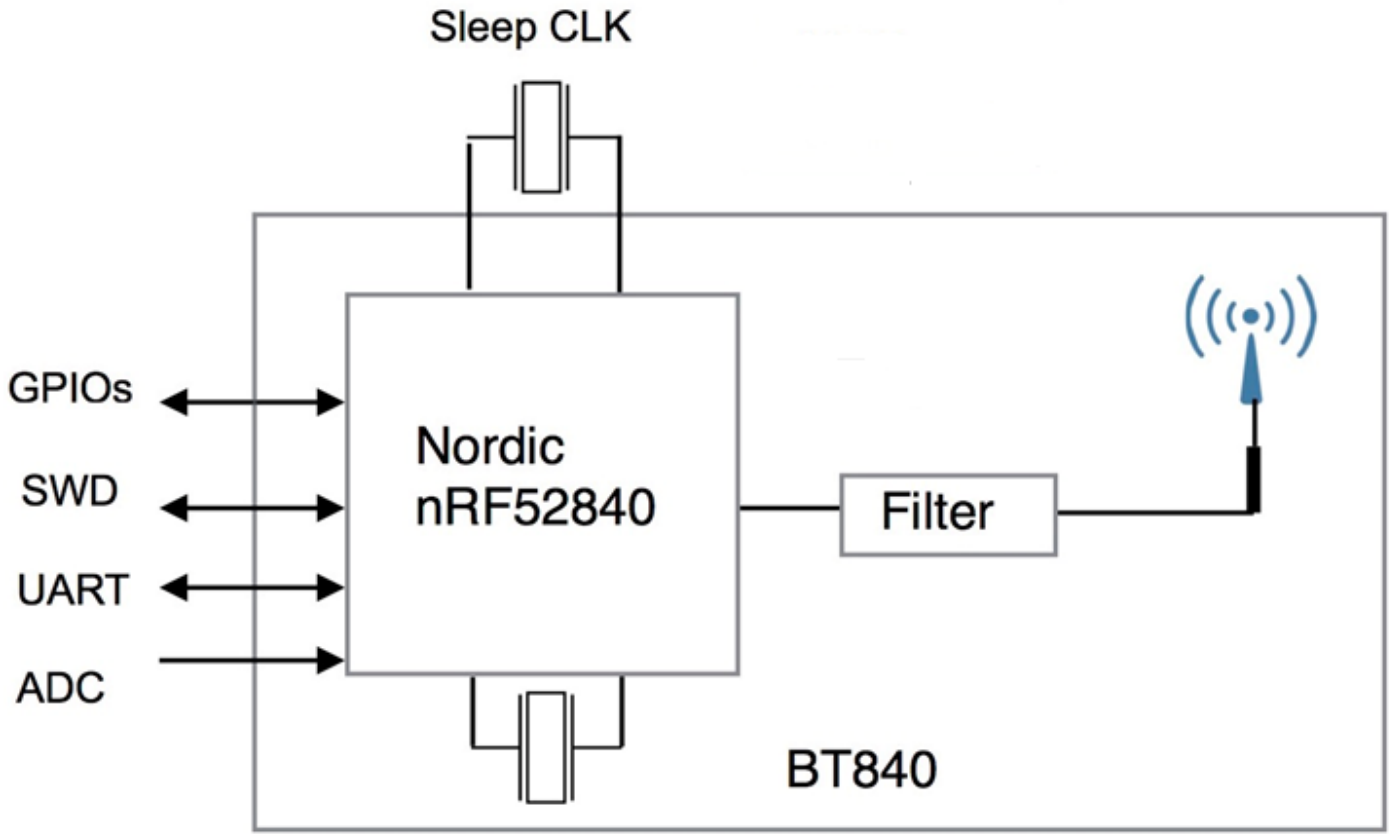

BlurNor BT840F is a sister module of BT832F. The physical size is the same. There are 21 additional LGA pins for additional GPIOs provided by nRF52840.

There are 3 modules in the BT840F Series.

BT840F

- Uses an nRF52840 QIAA with Cortex M4F MCU
- 1MB flash, 256 KB RAM
- Integrated PCB trace range antenna. Bluetooth range is 510 meters at 1Mbps and 930 meters at 125 Kbps.
- Size: 15x20.8x1.9mm.

BT840

- Uses an nRF52840 QIAA with Cortex M4F MCU
- 1MB flash, 256 KB RAM
- Integrated PCB trace range antenna. Bluetooth range is estimated at 180 meters at 1Mbps.
- Size: 14x16x1.9mm.

BT840E

- Uses an nRF52840 QIAA with Cortex M4F MCU
- 1MB flash, 256 KB RAM
- An u.FL connector for external antenna. Bluetooth range is estimated at over 1000 meters at 125 Kbps with ANT060 external antenna.
- Size: 14x16x1.9mm.

2. Codes Development Using Nordic Tools

Development tools by Nordic and other third party development tools recommended by Nordic should be used .

Easy, fast and safe code development

Nordic development environment for nRF52840

offers a clean separation between application code development and embedded protocol stacks. This means compile, link and run time dependencies with the embedded stack and associated debugging challenges are removed. The Bluetooth low energy and ANT stack is a pre-compiled binary, leaving application code to be compiled stand-alone. The embedded stack interface uses an asynchronous and event driven model removing the need for RTOS frameworks.

Over-The-Air DFU

The nRF52840 is supported by an Over-The-Air Device Firmware Upgrade (OTA DFU) feature. This allows for in the field updates of application software and SoftDevice.

SoftDevices

The Nordic protocol stacks are known as SoftDevices and complement the nRF52 Series SoCs. All nRF52 Series are programmable with software stacks from Nordic. This bring maximum flexibility to application development and allows the latest stack version to be programmed into the SoC.

SoftDevices available from Nordic:
S140: Bluetooth low energy concurrent central/peripheral/observer/broadcaster stack.

Development Tools

Nordic Semiconductor provides a complete range of hardware and software development tools for the nRF52 Series devices. nRF52 DK board is recommended for firmware development.

Nordic software development tools can be downloaded from the following webpage.

http://infocenter.nordicsemi.com/index.jsp?topic=/com.nordic.infocenter.nrf52/dita/nrf52/development/nrf52_dev_kit.html&cp=1_1

3. Product Descriptions

Brief description of nRF52840 SoC is provided. For full description of the SoC, please download from Nordic Semiconductor website.

https://www.nordicsemi.com/eng/Products/Bluetooth-low-energy

Block Diagram of nRF52840

The following is a block diagram of Nordic nRF52840 Bluetooth Low Energy (BLE) SoC. Arrows with white

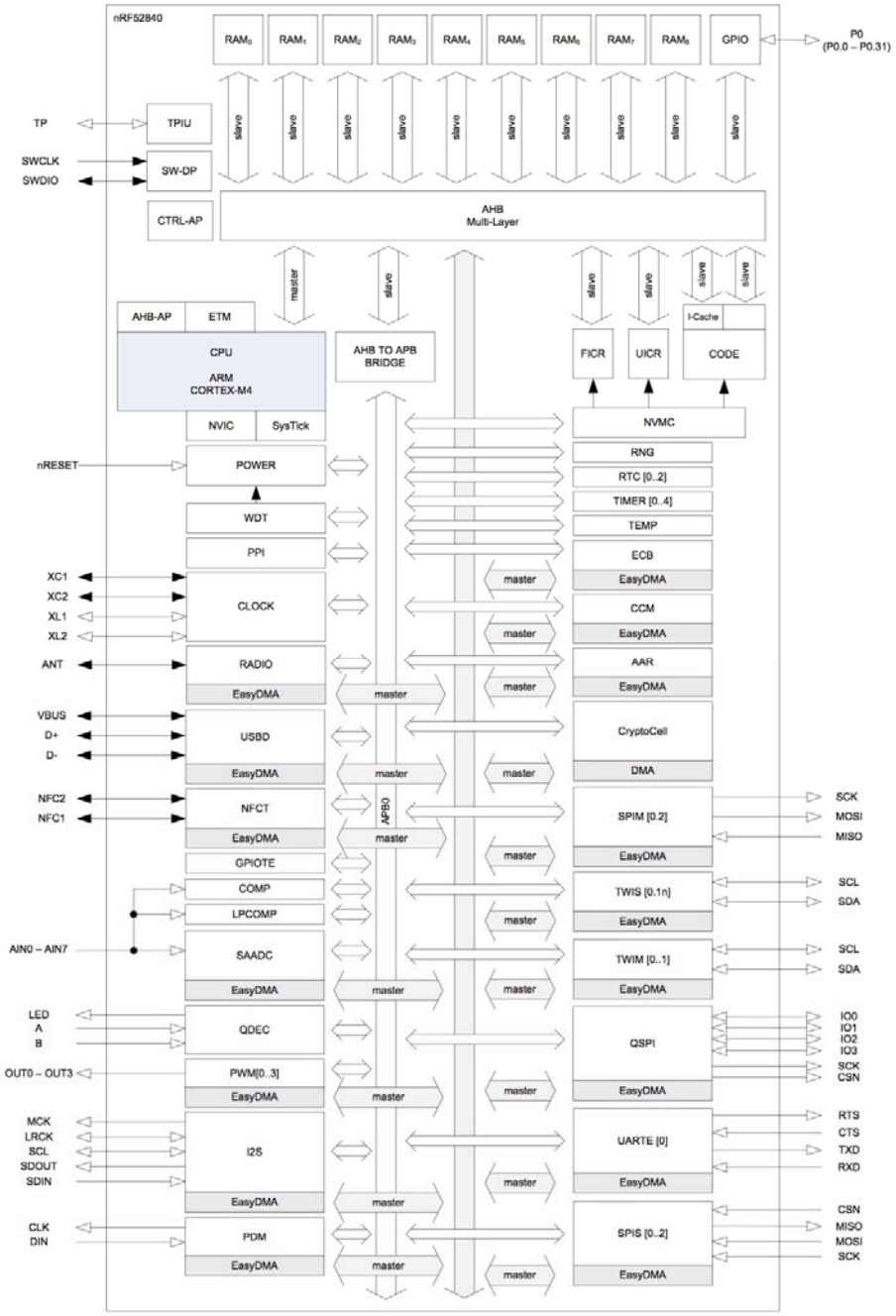

heads indicate signals that share physical pins with other signals.

The 32 bit ARM Cortex M4F MCU with hardware supports for DSP instructions and floating point operations, code density and execution speed are higher than other Cortex M MCU. The Programmable Peripheral Interconnect (PPI) system provides a 20-channel bus for direct and autonomous system peripheral communication without CPU intervention. This brings predictable latency times for peripheral to peripheral interaction and power saving benefits associated with leaving CPU idle. The device has 2 global power modes

ON/OFF, but all system blocks and peripherals have individual power management control which allows for an automatic switching RUN/IDLE for system blocks based only on those required/not required to achieve particular tasks.

The radio supports Bluetooth low energy and ANT. Output power is scalable from a maximum of +8dBm down to -20 dBm in 4dB steps. Sensitivity is increased to -96 dBm to -89 dBm, depending on data rate. Sensitivity for BLE is -96 dBm, and -92.5 dBm for ANT.

ARM Trustzone CryptoCell 310

ARM® TrustZone® CryptoCell-310co-processor is a security subsystem which provides Root of Trust (RoT) and cryptographic services for a device. CryptoCell services are available to the application through a software library API, not

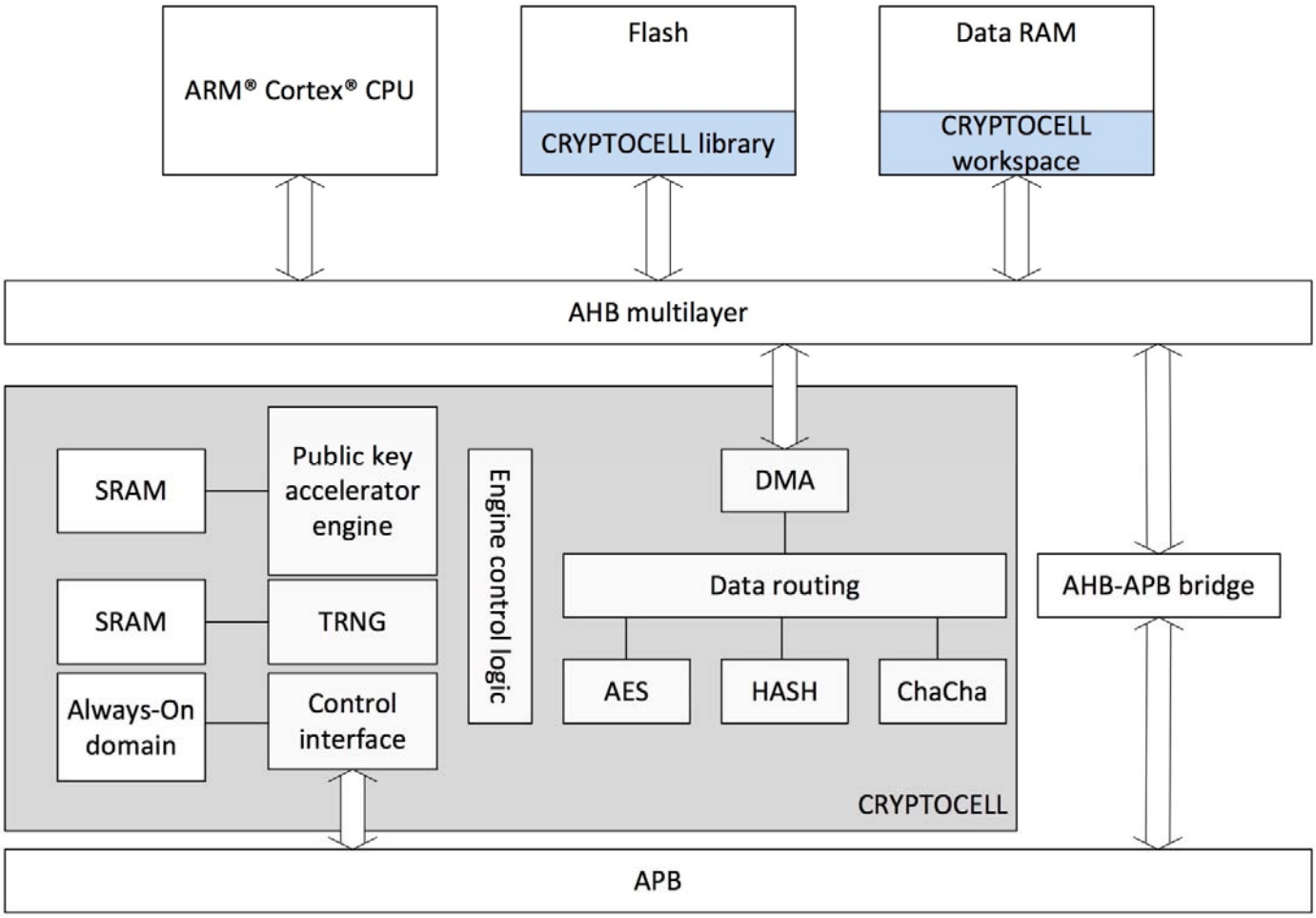

a hardware register interface.

The following cryptographic features are provided.

- FIPS-140-2 certified True Random Number Generator (TRNG)
- RSA asymmetric encryption
  - Up to 2048 bit key size

  - PKCS#1 v2.1/v1.5
  - Optional CRT support
- Elliptic curve cryptography (ECC)
  - NIST FIPS 186-4 recommended curves using pseudo-random parameters, up to 521 bits:
    - ➢ Prime field: P-192, P-224, P-256, P-384, P-521
  - SEC 2 recommended curves using pseudo-random parameters, up to 521 bits:
    - ➢ Prime field: P-160, P-192, P-224, P-256, P-384, P-521
  - Koblitz curves using fixed parameters, up to 256 bits:
    - ➢ Prime field: P-160, P-192, P-224, P-256
  - Edwards/Montgomery curves:
    - ➢ Ed25519, Curve 25519
  - ECDH/ECDSA support
- Secure remote password protocol (SRP)
  - Up to 3072 bit operations
- Hashing functions
  - SHA-1, SHA-2 up to 256 bit size
  - keyed-hash message authentication code (HMAC)
- AES symmetric encryption
  - General purpose AES engine (encrypt/decrypt, sign/verify)
  - 128 bit key size
  - Supported encryption modes: ECB, CBC, CMAC/CBC-MAC, CTR, CCM/CCM*.
- ChaCha20/Poly1305 symmetric encryption
  - Supported keyed size: 128 and 256 bits
  - Authenticated encryption with associated data (AEAD) mode

Mechanical Drawings

The followings are mechanical drawings of BT840F and BT832F. The physical sizes of both are the same, 15x20.8x1.9mm. Except the 19 pins in solid black dots, BT840F and BT832F is hardware pin to pin compatible. Firmware configuration is required to perform the same function.

Two types of pins are available to meet different application requirements.

- 16 castellated pins for application needing limited number of IOs. SMT equipment is not required for soldering castellated pins.
- 45 LGA (Land Grid Array) pins to access all 48 GPIOs of nRF52840 when needed.

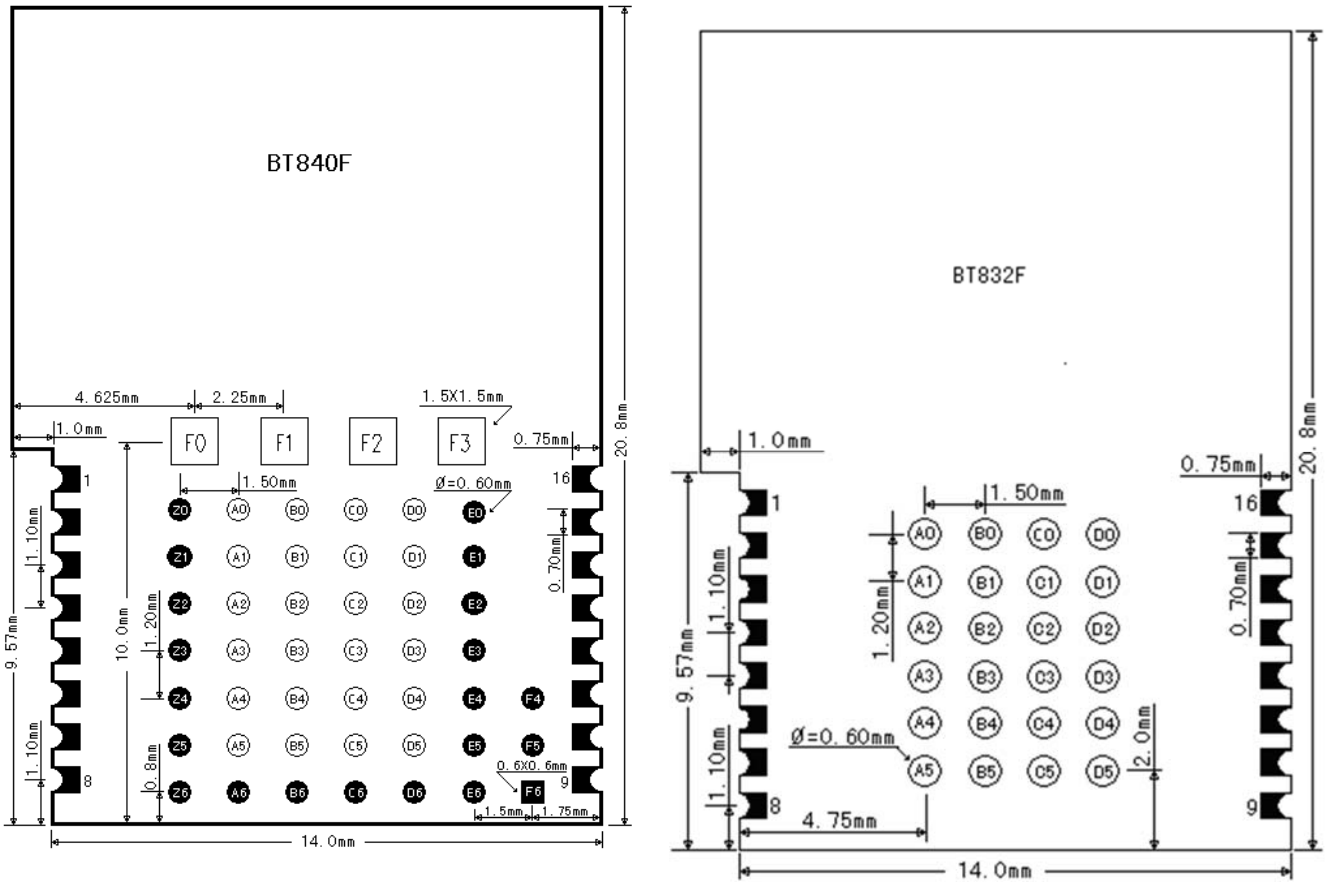

BT840F and BT832F Mechanical drawings, top view

Pin Assignments of BT840

The followings are BT840 pin assignment. Pin functions are in a table in next section. Please refer to Nordic nRF52840 Product Specifications for detailed descriptions and features supported.

https://www.nordicsemi.com/eng/Products/nRF52840

BT840F pins is a super set of that of BT832F. A PCB developed for BT832 Series can be used for BT840 Series and vice versa.

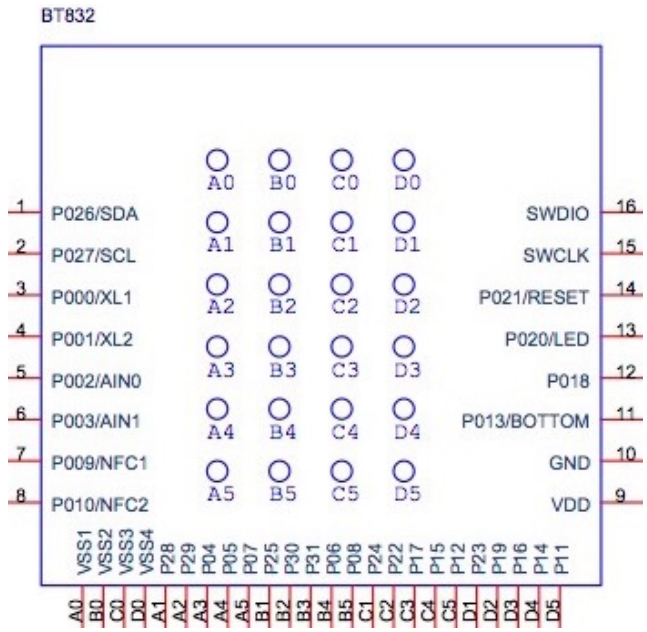

BT832F pin assignments.

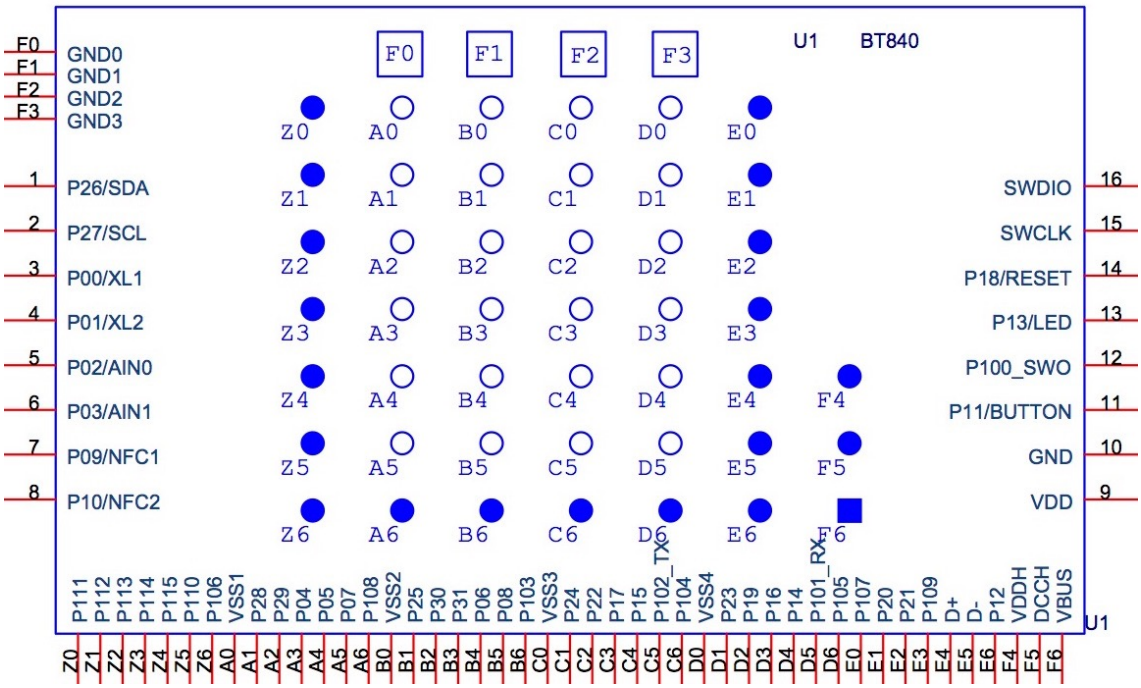

BT840F pin assignments

BT840	52840		BT832	52832		
pin#	pin#	pin name	pin#	pin#	pin name	Descriptions
1	G1	P0.26/SDA	1	38	P0.26	GPIO, configured as I2C SDA on EV-BT840
2	H2	P0.27/SCL	2	39	P0.27	GPIO, configured as I2C SCL on EV-BT840
3	D2	P0.00/XL1	3	2	P0.00/XL1	GPIO, connection for 32.768kHz crystal
4	F2	P0.01/XL2	4	3	P0.01/XL2	GPIO, connection for 32.768kHz crystal
5	A12	P0.02/AIN0	5	4	P0.02/AIN0	GPIO, Analog input
6	B13	P0.03/AIN1	6	5	P0.03/AIN1	GPIO, Analog input
7	L24	P0.09	7	11	P0.09	GPIO
8	J24	P0.10	8	12	P0.10	GPIO
9	B1	VDD	9	13	VDD	DC supply 1.7V to 3.6V
10	B7	GND	10	45	VSS	Ground
11	T2	P0.11	11	16	P0.13	GPIO
12	AD22	P1.00	12	21	P0.18	GPIO
13	AD8	P0.13	13	23	P0.20	GPIO
14	AC13	P0.18/RESET	14	24	P0.21/RESET	GPIO, configurable as RESET pin
15	AA24	SWDCLK	15	25	SWDCLK	Serial Wire Debug clock input
16	AC24	SWDIO	16	26	SWDIO	Serial Wire Debug I/O

Z0	B19	P1.11				GPIO
Z1	B17	P1.12				GPIO
Z2	A16	P1.13				GPIO
Z3	B15	P1.14				GPIO
Z4	A14	P1.15				GPIO
Z5	A20	P1.10				GPIO
Z6	R24	P1.06				GPIO
A0		GND	A0	45	VSS	Ground
A1	B11	P0.28/AIN4	A1	40	P0.28/AIN4	GPIO, Analog input
A2	A10	P0.29/AIN5	A2	41	P0.29/AIN5	GPIO, Analog input
A3	J1	P0.04/AIN2	A3	6	P0.04/AIN2	GPIO, Analog input
A4	K2	P0.05/AIN3	A4	7	P0.05/AIN3	GPIO, Analog input
A5	M2	P0.07	A5	9	P0.07	GPIO
A6	P2	P1.08				GPIO
B0		GND	B0	45	VSS	Ground
B1	AC21	P0.25	B1	37	P0.25	GPIO
B2	B9	P0.30/AIN6	B2	42	P0.30	GPIO
B3	A8	P0.31/AIN7	B3	43	P0.31	GPIO
B4	L1	P0.06	B4	8	P0.06	GPIO, NC for BT832X, BT840X, PA conrol
B5	N1	P0.08	B5	10	P0.08	GPIO
B6	V23	P1.03				GPIO
C0		GND	C0	45	VSS	Ground
C1	AD20	P0.24	C1	29	P0.24	GPIO
C2	AD18	P0.22	C2	27	P0.22	GPIO
C3	AD12	P0.17	C3	20	P0.17	GPIO, NC for BT832X,BT840X, PA control
C4	AD10	P0.15	C4	18	P0.15	GPIO
C5	W24	P1.02	C5	15	P0.12	GPIO
C6	U24	P1.04				GPIO
D0		GND	D0	45	VSS	Ground
D1	AC19	P0.23	D1	28	P0.23	GPIO
D2	AC15	P0.19	D2	22	P0.19	GPIO, NC for BT832X,BT840X, PA control
D3	AC11	P0.16	D3	19	P0.16	GPIO
D4	AC9	P0.14	D4	17	P0.14	GPIO
D5	Y23	P1.01	D5	14	P0.11	GPIO
D6	T23	P1.05				GPIO
E0	P23	P1.07				GPIO
E1	AD16	P0.20				GPIO
E2	AC17	P0.21				GPIO
E3	R1	P1.09				GPIO
E4	AD6	D+				USB D+

E5	AD4	D-				USB D-
E6	U1	P0.12				GPIO
F0						Ground pad, for BT840F V1, BT832X, BT840X
F1						Ground pad, for BT840F V1, BT832X, BT840X
F2						Ground pad, for BT840F V1, BT832X, BT840X
F3						Ground pad, for BT840F V1, BT832X, BT840X
F4	Y2	VDDH				High Voltage Power Supply
F5	AB2	DCCH				DC to DC converter output
F6	AD2	VBUS				5V DC power for USB 3.3V regulator

Pin Function

Mounting BT840F on the Host PCB

The following figure shows recommended mounting of BT840F module on the host PCB.

- For the best Bluetooth range performance, the antenna area of module shall extend 9.8 mm outside the edge of host PCB board, or 9.8 mm outside the edge of a ground plane.
- The next choice is to place a module on a corner of host PCB, the antenna area shall extend 9.8 mm from the edge of ground plane. Ground plane shall be at least 5 mm from the edge of the antenna area of module.

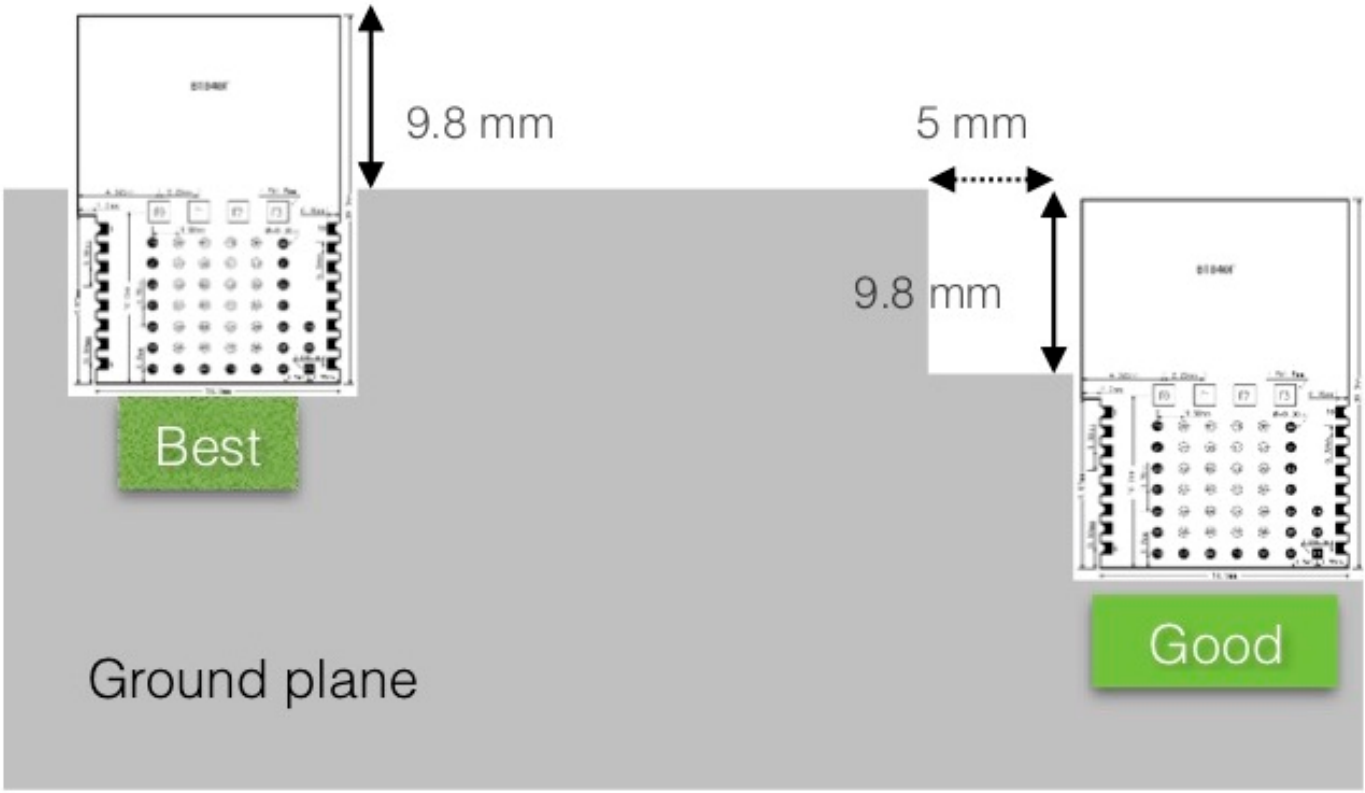

- We don't recommend mounting BT840F module in the middle of a host PCB.

For the best Bluetooth range performance, keep all external metal at least 30mm from the antenna area.

Host Board Design for Low Cost or Long Range

On nRF52 series SoCs, Nordic offers various memory options and protocol supports. Fanstel offers various antenna and power amplifier options. A host board can be designed to accommodate these nRF52 modules. Our suggestions for host PCB design:

If your main goal is minimum PCB cost,

- use a 2-sided PCB.
- Use library component from EV BT832 Gerber files, can be downloaded from http://www.fanstel.com/download-document/.It has 16 castellated pins plus 24 LGA pins. BT840F library component can be used. However, signal routing can be difficult on a 2-sided PCB.
- Be sure of no metal contact in the area of 21 additional BT840F pins.
- BT840F can be mounted on a BT832 pad.

If you main goal is maximum wireless range,

- use a 4 or more layers PCB.
- Use library component from EV BT840F V4 or newer Gerber files, can be downloaded from http://www.fanstel.com/download-document/.It has 16 castellated pins plus 45 LGA pins.
- As much ground plane under BT840F, on top side of host PCB as possible. Use EV BT840F V4 Gerber files as an example.
- If your products may need wireless range of 1350 meters at 1 Mbps, allocate physical space for a 15x28x1.9mm module. This larger module size is required to accommodate Skyworks SKY66112 power amplifier.
- Don’t use P0.06 (BT840F pin B4), P0.17 (BT840F pin C3), and P0.19 (BT840F pin D2) on the host board. These pins are used to control SKY66112 power amplifier.

4. BT840F Evaluation Board

Communicating with a PC

A quick and easy way to evaluate BT840F is to use a PC as the host processor. Connect the development board EV-BT840F to a PC with an USB cable. Then,

- SetS1, BT840F is set to command mode. PC will communicate with BT840F.
- Set switch S1 to the other position, BT840F is set to data mode. PC will communicate with a remote device through BT840F Bluetooth wireless connection.

Docklight is a testing, analysis and simulation tool for serial communication protocols (RS232, RS485/422 and others). It allows you to monitor the communication between two serial devices or to test the serial communication of a single device. Docklight significantly increases productivity in a broad range of industries, including automation and control, communications, automotive, equipment manufacturers, and embedded / consumer products. Docklight is easy to use and runs on almost any standard PC using Windows 10, Windows 8, Windows 7, Windows Vista or Windows XP operating system.

Docklight software can be downloaded from the following:

http://www.docklight.de/download_en.htm

EV BT840F V4 EvaluationBoard Schematics

Evaluation board schematics and Gerber files can be downloaded from

http://www.fanstel.com/download-document/

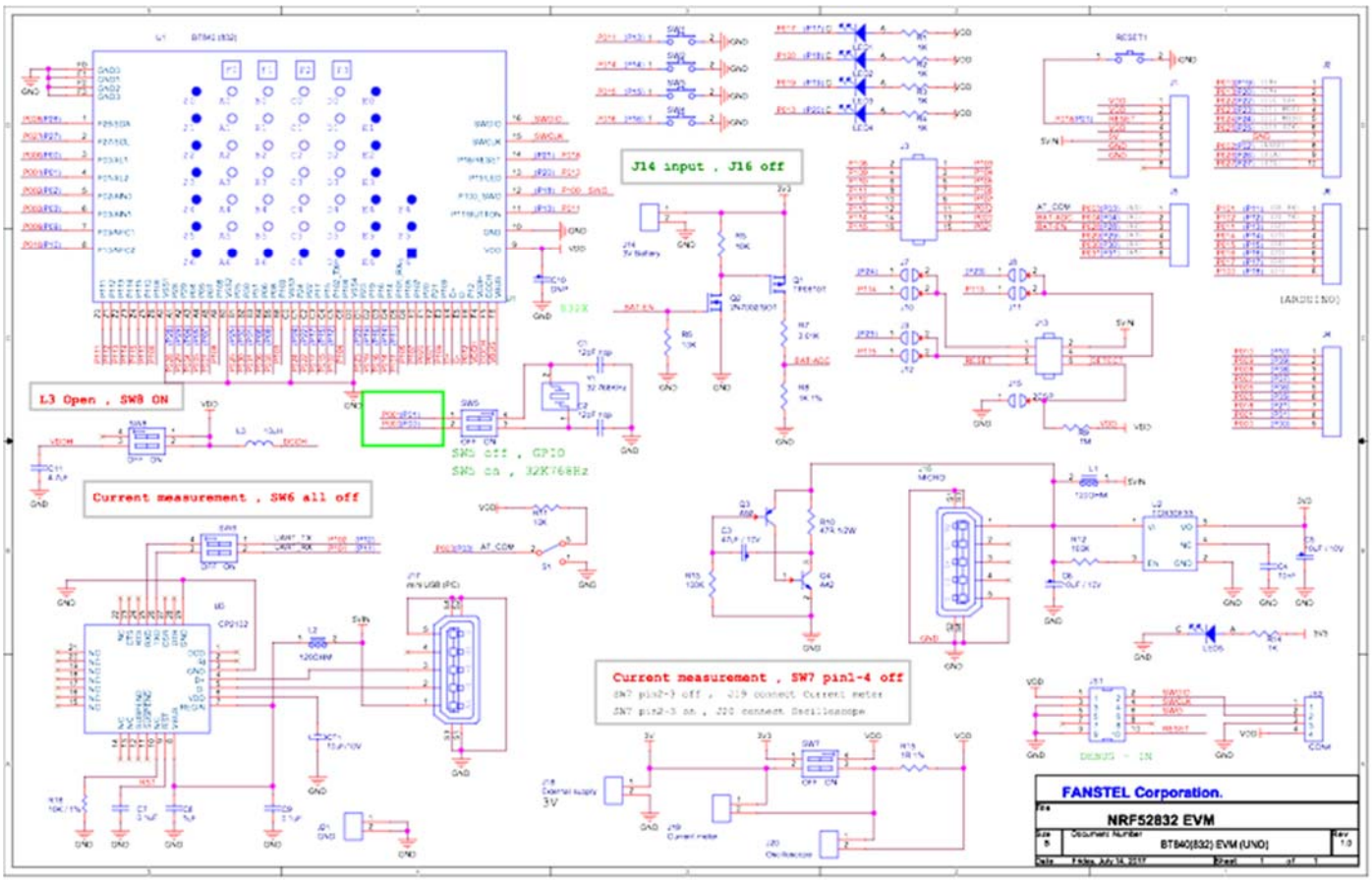

Evaluation board can be used as a reference design for using modules. EV BT840F V4 is designed for the BT840F soldering pads with 61 pins. These 21 pins in solid dark color are for BT840F.

EV BT840F V4 evaluation board is developed for BT840F and BT832X. It can be used for BT832 and BT832F. Pins in solid color are used only for BT840F. Blue color pin names around U1 BT840(832) are for BT832/BT832F/BT832X. Red color pin names are for BT840F. Firmware pin configuration is required for a host board to accommodate BT840F and BT832/BT832F/BT832X.

Additional feature enhancements for version V4 evaluation board:

1. It has the same foot print as Arduino Uno R3. Additional connectors are added for connection to extra GPIO pins of BlueNor modules.

2. EV BT840F is not an UNO R3 compatible board. You can use Nordic develop tools to develop firmware for many UNO R3 compatible shields.

3. Portable smartphone charger can be used to power this board. The circuitry to the left of micro USB connector, J16 produces periodic load to prevent portable smartphone charger from shutting down.

Suggestion for Battery Power Application

Standby current consumption is important for battery-powered product. We suggest adding a 32.768 kHz crystal and 2 capacitors on host board. The 32MHz main clock won't be active at idle state to save power.

Two inductors required for on-board DC to DC converter are inside BT840F. You can enable DCDC converter to have lower power consumption.

5. Miscellaneous

Soldering Temperature-Time Profile for Re-Flow Soldering

Maximum number of cycles for re-flow is 2. No opposite side re-flow is allowed due to module weight.

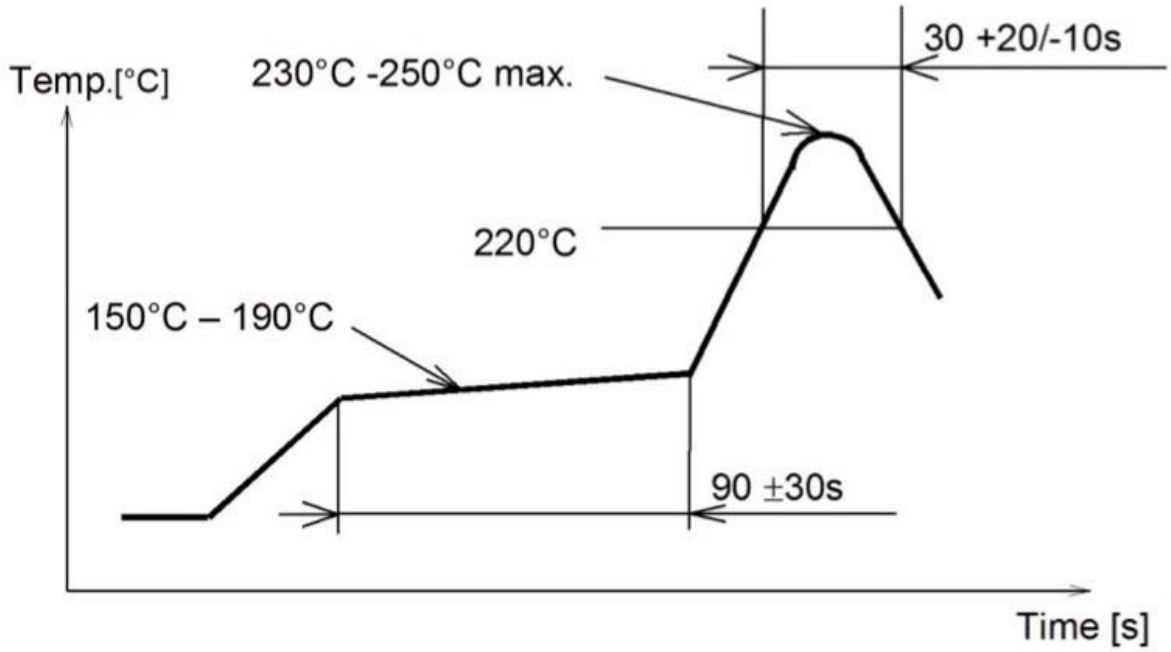

Cautions, Design Notes, and Installation Notes

Failure to follow the guidelines set forth in this document may result in degrading of the product'sfunctions and damage to the product.

Design Notes

(1) Follow the conditions written in this specification, especially the control signals ofthis module.

(2) The supply voltage has to be free of AC ripple voltage (for example from a battery or a low noise regulator output). For noisy supply voltages, provide a decoupling circuit (for example a ferrite in series connection and a bypass capacitor to ground of at least 47uF directly at the module).

(3) This product should not be mechanically stressed when installed.

(4) Keep this product away from heat. Heat is the major cause of decreasing the life of these products.

(5) Avoid assembly and use of the target equipment in conditions where the products' temperature may exceed the maximum tolerance.

(6) The supply voltage should not be exceedingly high or reversed. It should not carry noise and/or spikes.

(7) this product away from other high frequency circuits.

Notes on Antenna and PCB Layout

(1) Don't use a module with internal antenna inside a metal case.

(2) For PCB layout:

- Avoid running any signal line below module whenever possible,
- No ground plane below antenna,
- If possible, cut-off the portion of main board PCB below antenna.

Installation Notes

(1) Reflow soldering is possible twice based on the time-temperature profile in this data sheets.Set up the temperature at the soldering portion of this product according to this reflow profile.

(2) Carefully position the products so that their heat will not burn into printed circuitboards or affect the other components that are susceptible to heat.

(3) Carefully locate these products so that their temperatures will not increase due tothe effects of heat generated by neighboring components.

(4) If a vinyl-covered wire comes into contact with the products, then the cover will melt and generate toxic gas, damaging the insulation. Never allow contact between the cover and these products to occur.

(5) This product should not be mechanically stressed or vibrated when reflowed.

(6) If you want to repair your board by hand soldering, please keep the conditions of this chapter.

(7) Do not wash this product.

(8) Refer to the recommended pattern when designing a board.

(9) Pressing on parts of the metal cover or fastening objects to the metal will cause damage to the unit.

(10) For more details on LGA (Land Grid Array) soldering processes refer to the application note.

Usage Condition Notes

(1) Take measures to protect the unit against static electricity. If pulses or other transient loads (a large load applied in a short time) are applied to the products, check and evaluate their operation before assembly on the final products.

(2) Do not use dropped products.

(3) Do not touch, damage or soil the pins.

(4) Follow the recommended condition ratings about the power supply applied to thisproduct.

(5) Electrode peeling strength: Do not add pressure of more than 4.9N when soldered on PCB

(6) Pressing on parts of the metal cover or fastening objects to the metal cover will cause damage.

(7) These products are intended for general purpose and standard use in general electronic equipment, such as home appliances, office equipment, informationand communication equipment.

Storage Notes

(1)The module should not be stressed mechanically during storage.

(2)Do not store these products in the following conditions or the performancecharacteristics of the product, such as RF performance will be adverselyaffected:

- Storage in salty air or in an environment with a high concentration of corrosive gas.
- Storage in direct sunlight
- Storage in an environment where the temperature may be outside the range specified.
- Storage of the products for more than one year after the date of delivery storage period.

(3) Keep this product away from water, poisonous gas and corrosive gas.

(4) This product should not be stressed or shocked when transported.

(5) Follow the specification when stacking packed crates (max. 10).

Safety Conditions

These specifications are intended to preserve the quality assurance of products and individual components. Before use, check and evaluate the operation when mounted on your products. Abide by these specifications, without deviation when using the products. These products may short-circuit. If electrical shocks, smoke, fire, and/or accidents involving human life are anticipated when a short circuit occurs, then provide the following failsafe functions, as a minimum.

(1)Ensure the safety of the whole system by installing a protection circuit and a protection device.

(2)Ensure the safety of the whole system by installing a redundant circuit or anothersystem to prevent a dual fault causing an unsafe status.

Other Cautions

(1)This specification sheet is copyrighted. Reproduction of this data sheets is permissible only if reproduction is without alteration and is accompanied by all associated warranties, conditions, limitations, and notices.

(2)Do not use the products for other purposes than those listed.

(3)Be sure to provide an appropriate failsafe function on your product to prevent anadditional damage that may be caused by the abnormal function or the failure of the product.

(4)This product has been manufactured without any ozone chemical controlled under the Montreal Protocol.

(5)These products are not intended for other uses, other than under the special conditions shown below. Before using these products under such special conditions, check their performance and reliability under the said special conditions carefully to determine whether or not they can be used in such a manner.

- In liquid, such as water, salt water, oil, alkali, or organic solvent, or in places where liquid may splash.
- In direct sunlight, outdoors, or in a dusty environment
- In an environment where condensation occurs.
- In an environment with a high concentration of harmful gas.

(6) If an abnormal voltage is applied due to a problem occurring in other componentsor circuits, replace these products with new products because they may not beable to provide normal performance even if their electronic characteristics and appearances appear satisfactory.

(7) When you have any question or uncertainty, contact Fanstel.

Packaging

Production modules are delivered in reel, 1000 modules in each reel.

FCC LABEL

The Original Equipment Manufacturer (OEM) must ensure that the OEM modular transmitter must be labeled with its own FCC ID number. This includes a clearly visible label on the outside of the final product enclosure that displays the contents shown below. If the FCC ID is not visible when the equipment is installed inside another device, then the outside of the device into which the equipment is installed must also display a label referring to the enclosed equipment

The end product with this module may subject to perform FCC part 15 unintentional emission test requirement and be properly authorized.

This device is intended for OEM integrator only.

6.Contact Us

United States:
Fanstel Corp.
7466 E. Monte Ctisto Ave. Scottsdale AZ 85260
Tel. 1 480-948-4928
Fax. 1-480-948-5459
Email: module@fanstel.com
Website: www.fanstel.com

Taiwan:
Fanstel Corp.
10F-10, 79 Xintai Wu Road
Xizhu, New Taipei City, Taiwan 22101
泛世公司
臺灣省新北市汐止區新臺五路 79 號 10 樓之 10, 22101
Tel. 886-2-2698-9328
Fax. 886-2-2698-4813
Email: tp@fanstel.com
Website: www.fanstel.com

China:
Fanstel Technologies Corp.
11 Jiale Street
Ping-Dih, Long-Gang, Shen Zhen, GD 518117
泛世康科技(深圳)有限公司
廣東省深圳市龍崗區坪地鎮佳樂街 11 號
Tel. 86-755-8409-0928
Fax. 86-755-8409-0973
QQ. 3076221086
Email: sz@fanstel.com
Website: www.fanstel.com

Federal Communications Commission (FCC) Statement

You are cautioned that changes or modifications not expressly approved by the part responsible for compliance could void the user's authority to operate the equipment.

This equipment has been tested and found to comply with the limits for a Class B digital device, pursuant to part 15 of the FCC rules. These limits are designed to provide reasonable protection against harmful interference in a residential installation. This equipment generates, uses and can radiate radio frequency energy and, if not installed and used in accordance with the instructions, may cause harmful interference to radio communications. However, there is no guarantee that interference will not occur in a particular installation. If this equipment does cause harmful interference to radio or television reception, which can be determined by turning the equipment off and on, the user is encouraged to try to correct the interference by one or more of the following measures:

-Reorient or relocate the receiving antenna.
-Increase the separation between the equipment and receiver.
-Connect the equipment into an outlet on a circuit different from that to which the receiver is connected.
-Consult the dealer or an experienced radio/TV technician for help.

This device complies with Part 15 of the FCC Rules.Operation is subject to the following two conditions:
1) this device may not cause harmful interference, and
2) this device must accept any interferencereceived, including interference that may cause undesired operation of the device.

FCC RF Radiation Exposure Statement:
This equipment complies with FCC radiation exposure limits set forth for an uncontrolled environment. End users must follow the specific operating instructions for satisfying RF exposure compliance. This transmitter must not be co-located or operating in conjunction with any other antenna or transmitter.

RF exposure warning
This equipment must be installed and operated in accordance with provided instructions and the antenna(s) usedfor this transmitter must be installed to provide a separation distance of at least 20 cm from all persons and mustnot be co-located or operating in conjunction with any other antenna or transmitter. End-users and installers mustbe provide with antenna installation instructions and transmitter operating conditions for satisfying RF exposurecompliance.

Industry Canada (IC) Statement
This device complies with Industry Canada licence-exempt RSS standard(s). Operation is subjectto the following two conditions: (1) this device may not cause interference, and (2) this devicemust accept any interference, including interference that may cause undesired operation of thedevice.

Canada, avis d'Industry Canada (IC)

Le présent appareil est conforme aux CNR d'Industrie Canada applicables aux appareils radio exempts de licence. L'exploitation est autorisée aux deux conditions suivantes:

(1) l'appareil ne doit pas produire de brouillage, et

(2) l'utilisateur de l'appareil doit accepter tout brouillage radioélectrique subi, même si le brouillage est susceptible d'en compromettre le fonctionnement.

Informations concernant l'exposition aux fréquences radio (RF)

Cet équipement est conforme avec l'exposition aux radiations IC définies pour un environnement noncontrôlé. Cet équipement doit être installé et utilisé à une distance minimum de 20 cm entre le radiateuret votre corps. Cet émetteur ne doit pas être co-localisées ou opérant en conjonction avec une autreantenne ou transmetteur. Les utilisateurs finaux et les installateurs doivent être informés des instructions d'installation de l'antenne et des conditions de fonctionnement de l'émetteur afin de satisfaire à la conformité d'exposition RF.

Note: The end product shall has the words "Contains Transmitter Module FCC ID:X8WBT840F, IC: 4100A-BT840F"

Information for the OEM and Integrators

The following statement must be included with all versions of this document supplied to an OEM or integrator, but should not be distributed to the end user.

(1) This device is intended for OEM integrators only.

(2) Please see the full Grant of Equipment document for other restrictions.