WT02C40C,WT02E40E BLE 5.4,802.15.4,WiFi6 Combo Module

Ver 0.96, Oct. 2024

WT02C40C Series are combo modules of a Nordic WiFi 6 nRF7002 SoC and a Nordic nRF5340 BLE SoC. With a dual core ARM Cortex™ M33 MCU, up to 128MHz, quad radio-protocol transceivers, and various antenna options. They will be certified for BLE, 802.15.4, 2.4 GHz WiFi 6 and 5 GHz WiFi 6. It allows faster time to market with reduced development cost, especially for Matter applications.

No external component needed to minimize host PCB area: 40MHz, 32 MHz and 32.768 KHz, -40°C to +105°C, 20 PPM crystals are integrated. DCDC inductors for VDD and VDDH are integrated. Powering up sequence control circuitry is embedded.

WiFi 6 Specifications

- Nordic nRF7002 SoC.
- Low-power and secure Wi-Fi for the IoT
- Supports IEEE 802.11 a/b/g/n/ac/ax
- Supports Target Wake Time (TWT), Orthogonal Frequency Division Multiple Access (OFDMA, Downlink and Uplink), BSS coloring
- WiFi CERTIFIED 6™, WiFi CERTIFIED™ a/b/g/n/ac, WiFi Enhanced Open™.
- Supports WPA3™, WPA2™, WPA™ - Personal and Enterprise, Protected Management Frames.
- Supports WMM®, WMM-Power Save, WiFi Agile Multiband™, WiFi Direct®.
- 2.4 GHz and 5 GHz dual-band or 2.4 GHz only
- Adjustable TX power from +5 to +19 dBm.
- Wi-Fi 6 Station (STA)
- 1 Spatial Stream (SS)
- 20 MHz channel bandwidth
- 64 QAM (MCS7), 86 Mbps PHY throughput
- Co-existence interfaces

BLE/802.15.4 Specifications:

- nRF5340 CLAA, dual core ARM® Cortex M33
- Application Core
  - 128/64 MHz Cortex M33 with FPU and DSP instructions
  - 1MB flash, 512KB RAM
  - 8KB 2-way set associate cache
  - ARM® TrustZone® Cryptocell-312 co-processor
- Network core:
  - 64 MHz Cortex M33 with 2KB instruction cache
  - 256KB flash, 64KB RAM
  - Receiver Sensitivity: -98 dBm at 1Mbps.
  - TX power: programmable +3dBm to -20dBm
  - BLE data rate: 2Mbps, 1Mbps, 500kbps, 125kbps.
  - IEEE 802.15.4 data rate: 250 Kbps
- DCDC inductors for VDD, VDDH on board.
- Serial Wire Debug (SWD)
- Over-the-Air (OTA) firmware update
- 48 General purpose I/O pins
- USB 2.0 full speed (12 Mbps) controller
- QSPI interface
- Type 2 NFC-A tag with wake-on field, Touch-to-pair support
- Programmable peripheral interconnect (PPI)
- 12 bit/200 Kbps ADC, 8 configurable channels.
- Up to 3x pulse width modulator (PWM)
- Audio peripherals: I^2S, digital microphone interface (PDM)
- 5 x 32 bit timers with counter mode
- Up to 3x SPI masters/3x SPI slaves
- Up to 2x I^2C compatible 2-wire masters/slaves
- 2x UART (CTS/RTS)
- Quadrature Demodulator (QDEC)
- 2x real time counters (RTC)

Miscellaneous

- Hybrid pins: 16 castellated and 45 LGA.
- Modules can be “T” shape
- Operation voltage: 3.3V
- Pending Certifications: (BLE, 802.15.4, 2.4 GHz WiFi, 5GHz WiFi).
- FCC ID:
- ISED ID:
- CE, RCM:
- TELEC ID:
- Taiwan NCC.
- QDID: 119517, 182626
- All modules support **approtect** features.

Model Summaries

module	WT02E40E	WT02C40C	WT02V40V	WT02E40C	WT02P40P
Size W(antenna)xHxT, mm	14.0(15.5)x23.0x2.0	14.0(25.0)x24.8x2.0	14.0(16.4)x30.5x2.0	14.0(15.5)x24.5x2.0	14(14)x18.5x2.0
SoCs	nRF5340+nRF7002	nRF5340+nRF7002	nRF5340+nRF7002	nRF5340+nRF7002	nRF5340+nRF7002
Embedded crystals	40M+32M+32K	40M+32M+32K	40M+32M+32K	40M+32M+32K	40M+32M+32K

BT/WiFi Antenna	u.FL/u.FL	Chip/Chip	Chip/chip	u.FL/Chip	Pads/pads
2.4GHz WiFi range, iPhone 14					
5GHz WiFI range, iPhone 14					
Operating temp.	-40ºC to +85ºC	-40ºC to +85ºC	-40ºC to +85ºC	-40ºC to +85ºC	-40ºC to +85ºC
Evaluation board	EV-WT02E40E	EV-WT02C40C	EV-WT02V40V	EV-WT02E40C	EV-WT02P40P
Availability	Q1, 2025	Q1, 2025	Q1, 2025	Q1, 2025	Q1, 2025

Table Of Contents

1. Introduction 4
WT02C40C Block Diagram 4
Module Descriptions 4
Matter Applications 5
2. Product Descriptions 6
Block Diagram of nRF5340 6
Mechanical Drawings 8
Pin Assignments of WT02C40C 11
Pin Functions 13
nRF5340 and NRF7002 Internal Connection 16
Using Internal Load Capacitors for the High Frequency Oscillator 17
Powering Up Sequence 19
Host Board Design 20
Mounting WT02C40C Module on the Host PCB 20
Evaluation Board Schematics 21
Suggestion for Battery Power Application 24
3. Firmware Development 25
WT02C40C Evaluation Board 25
Nordic Development Tools 26
Android OS Apps 26
iOS Apps 26
Codes for Evaluation Boards 26
MAC addresses 26
Setting Regional Transmission Parameters 27
USA and Canada 27
Europe, UK, and Australia 27
Japan TELEC 27
4. Miscellaneous 28
Soldering Temperature-Time Profile for Re-Flow Soldering 28
Cautions, Design Notes, and Installation Notes 28
Packaging and Lot Number 32
Federal Communications Commission (FCC) Statement 32
Revision History 34
Contact Us ..... 錯誤! 尚未定義書籤。

1. Introduction

WT02C40C Series are combo modules of a Nordic WiFi 6 nRF7002 SoC and a Nordic nRF5340 BLE SoC. With a dual core ARM Cortex™ M33 MCU, up to 128MHz, quad radio-protocol transceivers, and various antenna options. They will be certified for BLE, 802.15.4, 2.4 GHz WiFi 6 and 5 GHz WiFi 6. It allows faster time to market with reduced development cost, especially for Matter applications.

WT02C40C Block Diagram

The following is a block diagram of WT02C40C. All required crystals are embedded. Connection to an external NFC (Near Field Communication) antenna is provided. Both WiFi 6 and Bluetooth/Thread have 3 antenna

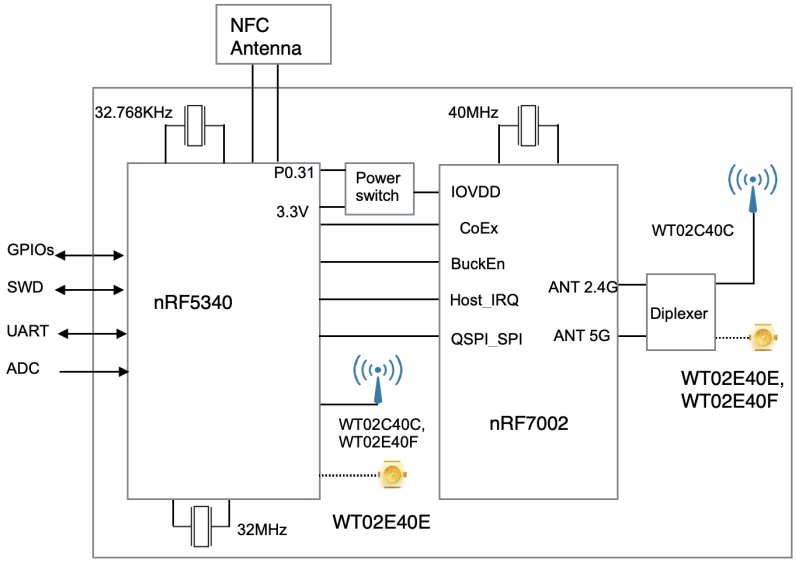

options, chip, u.FL or connection pads for an external antenna.

Module Descriptions

WT02C40C

- An nRF5340 SoC with dual core Cortex M33 MCU, up to 128 MHz
- An integrated high performance chip antenna for BLE/802.15.4.
- An nRF7002 WiFi 6 SoC supports IEEE 802.11 a/b/g/n/ac/ax for both 2.4 GHz and 5 GHz bands.
- An integrated high performance chip antenna for WiFi 6.
- Size: 14.0 (25.0 antenna area) x 24.8 x2.0 mm.
- Not recommended for Matter application.

WT02V40V

- An nRF5340 SoC with dual core Cortex M33 MCU, up to 128 MHz
- An integrated chip antenna for BLE/802.15.4.
- An nRF7002 WiFi 6 SoC supports IEEE 802.11 a/b/g/n/ac/ax for both 2.4 GHz and 5 GHz bands.
- An integrated chip antenna for WiFi 6.
- Size: 14.0 (16.4 antenna area) x 30.5 x 2.0 mm.
- Not recommended for Matter application.

WT02E40C

- An nRF5340 SoC with dual core Cortex M33 MCU, up to 128 MHz
- An integrated high performance chip trace antenna for BLE /802.15.4.
- An nRF7002 WiFi 6 SoC supports IEEE 802.11 a/b/g/n/ac/ax for both 2.4 GHz and 5 GHz bands.
- An u.FL connector for an external WiFi antenna.
- Size: 14.0 (15.5 antenna area) x 24.5 x 2.0 mm.
- Recommended for Matter applications.

WT02E40E

- An nRF5340 SoC with dual core Cortex M33 MCU, up to 128 MHz
- An integrated chip antenna for BLE/802.15.4.
- An nRF7002 WiFi 6 SoC supports IEEE 802.11 a/b/g/n/ac/ax for both 2.4 GHz and 5 GHz bands.
- An u.FL connector for an external WiFi 6 antenna.
- Size: 14.0 (15.5 antenna area) x 23.0 x 2.0 mm
- Recommended for Matter applications.

WT02P40P

- An nRF5340 SoC with dual core Cortex M33 MCU, up to 128 MHz
- Pads for BLE/802.15.4 antenna connection on the host board.
- An nRF7002 WiFi 6 SoC supports IEEE 802.11 a/b/g/n/ac/ax for both 2.4 GHz and 5 GHz bands.
- Pads for WiFi 6 antenna connection on the host board.
- Size: 14.0 (14.0) x 18.5 x 2.0 mm
- Recommended for Matter applications.

Matter Applications

The Thread (802.15.4) receiver must be always on for Matter applications. A physical separation is required between the WiFi 6 antenna and the Bluetooth antenna. Antennas of WT02E40E, WT02E40C, and WT02P40P can be separated physically. These modules can be used for Matter applications.

Physical separation is not possible for antennas of WT02C40C and WT02V40V. They shall not be used in Matter applications.

2. Product Descriptions

Block Diagram of nRF5340

The following is a block diagram of Nordic nRF5340 Bluetooth Low Energy (BLE) SoC. Please visit Nordic

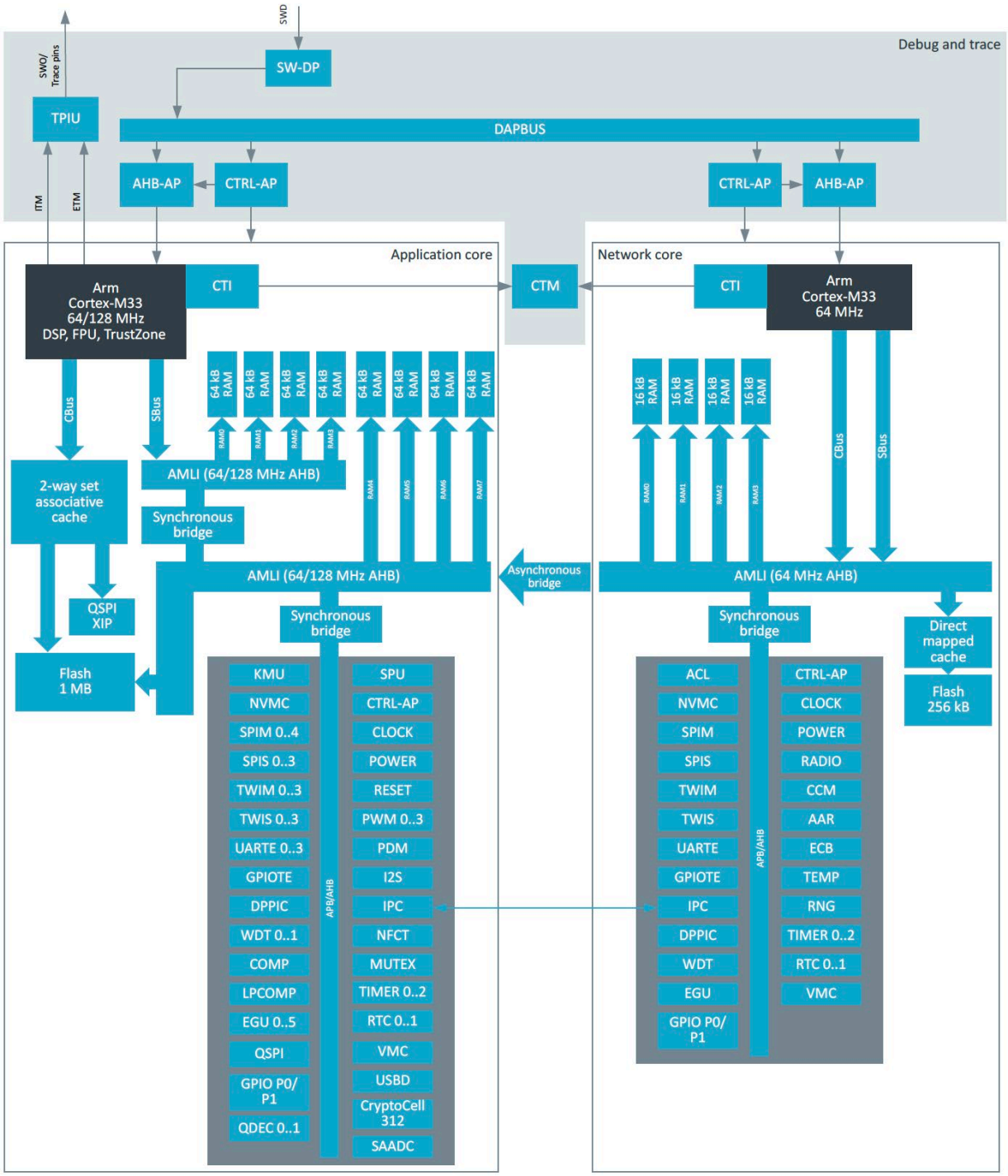

website for **full description and product specifications**.

nRF5340 is a wireless ultra-low power multiple core System on Chip (SoC) integrating two fully programmable Arm Cortex M33 processors, advanced security features, a range of peripherals, and a multiprotocol 2.4 GHz transceiver. The transceiver supports Bluetooth low energy, ANT™, and 802.15.4 and allows the implementation of proprietary 2.4 GHz protocols.

The two Arm Cortex M33 processors share the power, clock, and peripheral architecture with Nordic Semiconductor nRF51, nRF52, and nRF91 Series of PAN/LAN SoCs, ensuring minimal porting efforts. The application core is a full-featured Arm Cortex M33 processor including DSP instructions and FPU and running at up to 128 MHz with 1MB of flash and 512 KB of RAM. The option to run the application processor at 64 MHz allows the CPU to increase energy efficiency. The network core is an Arm Cortex M33 processor with a reduced feature set, designed for ultra-low power operation. It runs at a fixed 64 MHz frequency and contains 256 KB of flash and 64 KB of RAM.

The peripheral set offers a variety of analog and digital functionality enabling single chip implementation of a wide range of applications. Arm trustZone technology, Arm cryptoCell-312, and supporting blocks for ysytem protection and key management are embedded for the advanced security needed for IoT applications.

Mechanical Drawings

Soldering pads for WT02C40C is the same as that of the nRF5340 modules, BT40F and BT40N. Due to different antenna designs, the sizes of modules are different.

Two types of pins are available to meet different application requirements.

- 16 castellated pins for application needing limited number of IOs. SMT equipment is not required for soldering castellated pins.
- 45 LGA (Land Grid Array) pins to access all 48 GPIOs of nRF5340 when needed.

The following is WT02E40E mechanical drawings, top view.

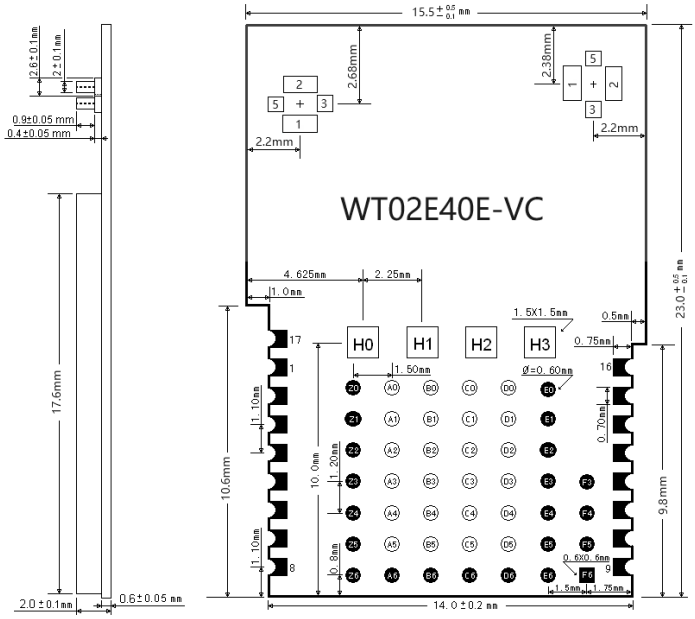

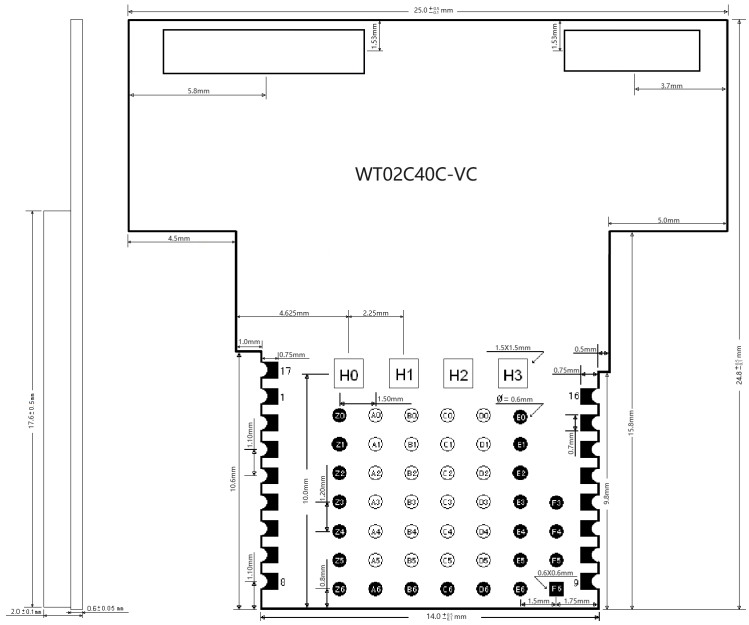

WT02C40C mechanical drawings, top view.

WT02E40C mechanical drawings, top view.

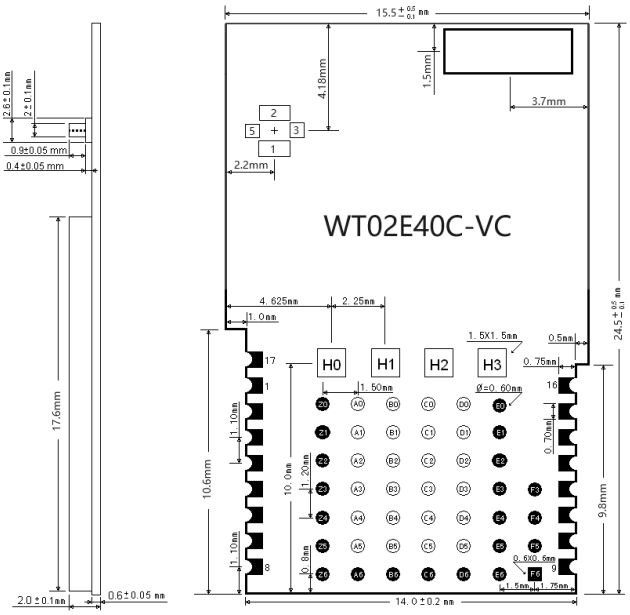

WT02V40V mechanical drawings, top view.

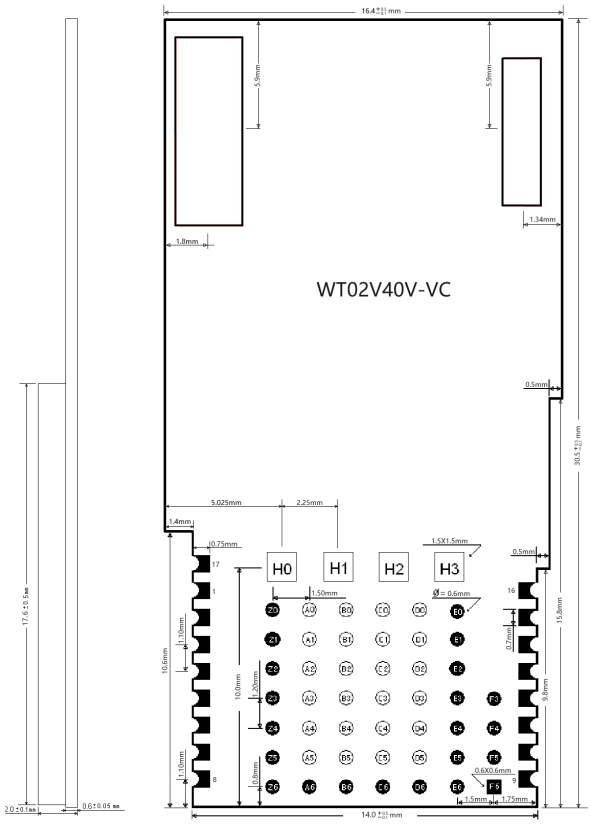

WT02P40P mechanical drawings, top view.

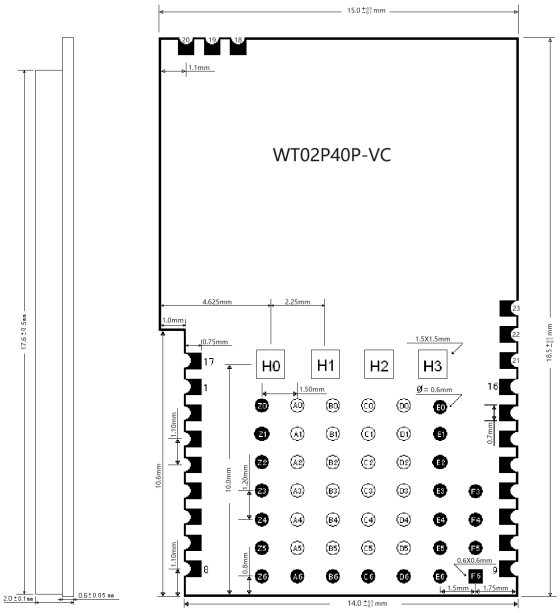

Pin Assignments of WT02C40C

The followings are WT02C40C pin assignment. Pin functions are in a table in next section. Please refer to Nordic **nRF5340 Product Specifications** for detailed descriptions and features supported.

BT40F, BT40N, and WT02C40C have compatible footprints. Pin assignments are below. Firmware configuration is required to upgrade module on the PCB.

BT40F pin assignments

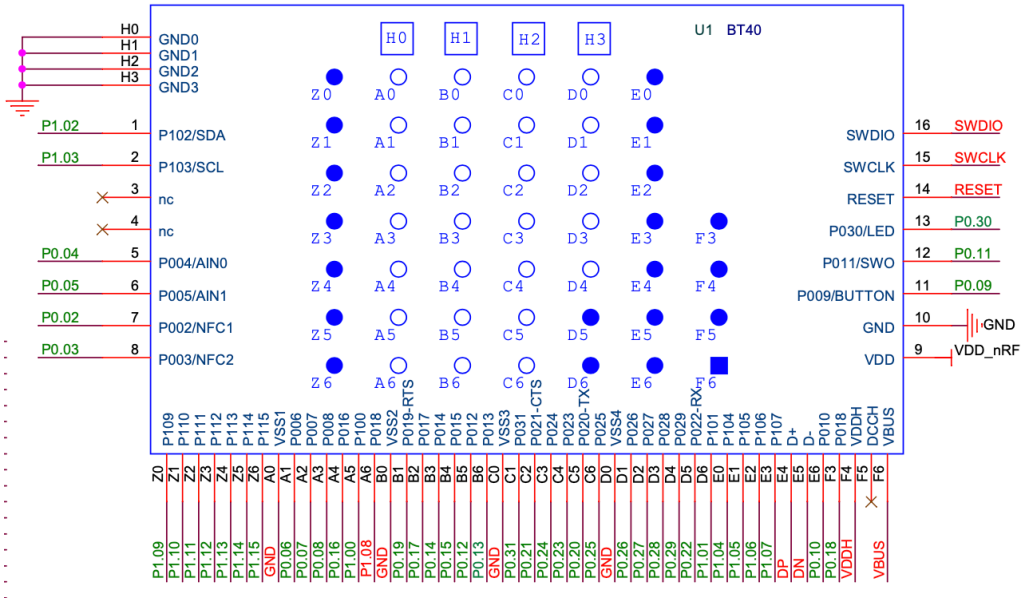

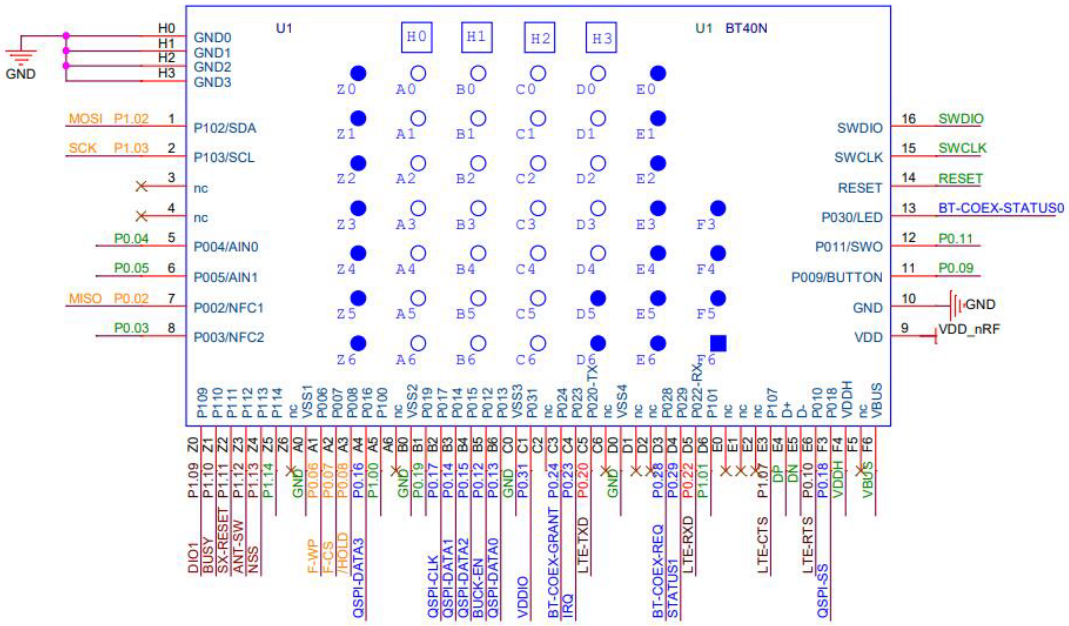

BT40N pin assignments.

WT02C40C pin assignments.

Pin 17 is 3.3V DC power input.

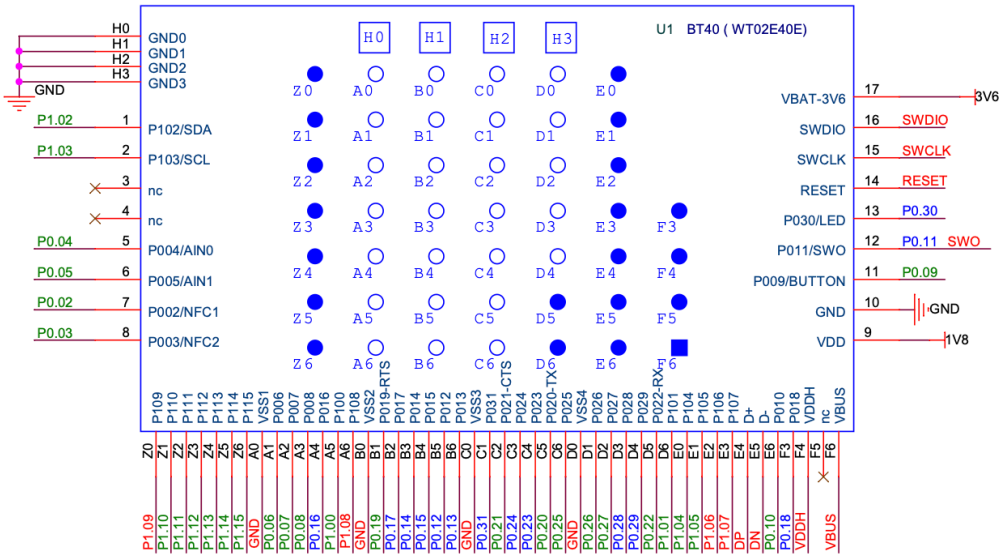

WT02P40P pin assignments.

Pin Functions

The nRF5340 GPIO pins used to manage nRF7002 inside WT02C40C are in **blue** color in the **Descriptions** column. These pins are NC (No Connect) on the module.
BT40N/NE has the same soldering pads as BT40F. It uses 9 GPIO pins internally to control the power amplifier, nRF21540. These pins are described in red color in the **Descriptions** column. The SPI pins may be shared with other SPI devices. Avoid using these pins as GPIO pins if you need Bluetooth range upgrade.

- WT02C40C represents WT02C40C, WT02E40C, WT02E40E, WT02P40P, and WT02V40V.
- WT02P40P only pins are marked with WT02P40P.

BT40/BT40N	WT02C40C	nRF5340		
pin#	pin#	pin#	pin name	Descriptions
1	1	AE1	P1.02	GPIO, configured as I2C SDA on EV board
2	2	AF2	P1.03	GPIO, configured as I2C SCL on EV board
3	3	N1	NC	NC, 32.768 KHz crystal embedded.
4	4	R1	NC	NC, 32.768 KHz crystal embedded.
5	5	V2	P0.04/AIN0	GPIO, Analog input
6	6	Y2	P0.05/AIN1	GPIO, Analog input
7	7	W1	P0.02/NFC1	GPIO, NFC antenna connection
8	8	AA1	P0.03/NFC2	GPIO, NFC antenna connection
9	9	A19	VDD	DC supply 1.7V to 3.6V. 3.3V nominal for WT02C40C Series, 2.9V minimum, 3.6V maximum.
10	10	A25	VSS	Ground
11	11	AJ1	P0.09/MOSI	GPIO; BT40F, high speed SPI_MOSI.
12	12	AK4	P0.11	GPIO
13	NC	B24	P0.30	GPIO; NC for WT02C40C, used as COEX_Status 0 internally for nRF7002.
14	14	AC31	/RESET	GPIO, reset with internal pull up, active low.
15	15	W31	SWDCLK	Serial Wire Debug clock input
16	16	AA31	SWDIO	Serial Wire Debug I/O
	17		Vbat-3.3V	To nRF7002 pin 31 BUCKVBATS and pin 25 BUCKVBAT. 3.3V nominal, 3.6V maximum.
	18		GND	WT02P40P only. Ground pad for BLE RF connection.
	19		BLE feed	WT02P40P only. BLE RF connection to a host board antenna.
	20		GND	WT02P40P only. BLE antenna ground.
	21		GND	WT02P40P only. WiFi antenna ground.
	22		WiFi feed	WT02P40P only. WiFi RF connection to a host board antenna.
	23		GND	WT02P40P only. WiFi antenna ground.
Z0	Z0	AK26	P1.09	GPIO
Z1	Z1	R31	P1.10	GPIO
Z2	Z2	B20	P1.11	GPIO;
Z3	Z3	B18	P1.12	GPIO;
Z4	Z4	A17	P1.13	GPIO;
Z5	Z5	B16	P1.14	GPIO
Z6	Z6	B14	P1.15	GPIO, Connected to nRF21540 SCK pin internally for BT40N.
A0	A0	A25	VSS	Ground

A1	A1	AB2	P0.06/AIN2	GPIO, Analog input
A2	A2	AD2	P0.07/AIN3	GPIO, Analog input
A3	A3	AH2	P0.08/SCK	GPIO; BT40F, high speed SPI clock
A4	A4	AL9	P0.16/IO3	GPIO; BT40F, high speed SPI IO3
A5	A5	M2	P1.00	GPIO
A6	A6	AL23	P1.08	GPIO, Connected to nRF21540 MOSI pin internally for BT40N.
B0	B0		VSS	Ground
B1	B1	AL13	P0.19	GPIO
B2	B2	AK12	P0.17/SCK	GPIO; BT40F, QSPI clock.
B3	B3	AK8	P0.14/IO1	GPIO; BT40F, QSPI IO1
B4	B4	AK10	P0.15/IO2	GPIO; BT40F, QSPI IO2
B5	NC	AK6	P0.12/DCX	GPIO; BT40F, high speed SPI DCX; NC for WT02C40C, used internally as BUCKEN for nRF7002.
B6	B6	AL5	P0.13/IO0	GPIO, BT40F, QSPI IO0
C0	C0		VSS	Ground
C1	NC	B22	P0.31	GPIO; NC for WT02C40C, used internally as IOVDD Control for nRF7002.
C2	C2	AL15	P0.21	GPIO; Connected to nRF21540 TX_EN pin internally for BT40N.
C3	NC	AL27	P0.24	GPIO; NC for WT02C40C, used internally as COES_Grant for RF7002.
C4	NC	AK20	P0.23	GPIO; NC for WT02C40C, used internally as Host IRQ for nRF7002.
C5	C5	AK16	P0.20	GPIO
C6	C6	AK28	P0.25/AIN4	GPIO, BT40F, analog input; Connected to nRF21540 MISO pin internally for BT40N.
D0	D0		VSS	Ground
D1	D1	AL29	P0.26/AIN5	GPIO, BT40F, analog input; Connected to nRF21540 PDN pin internally for BT40N.
D2	D2	AK30	P0.27/AIN6	GPIO; BT40F, analog input; Connected to nRF21540 RX_EN pin internally for BT40N.
D3	NC	AE31	P0.28/AIN7	GPIO, BT40F, analog input; NC for WT02C40C, used internally as COEX-REQ for nRF7002.
D4	NC	U31	P0.29	GPIO; NC for WT02C40C, used internally as COEX_Status 1 for nRF7002.
D5	D5	AK18	P0.22	GPIO
D6	D6	P2	P1.01	GPIO
E0	E0	AL19	P1.04	GPIO; Connected to nRF21540 MODE internally for BT40N.
E1	E1	AK22	P1.05	GPIO; Connected to nRF21540 ANT-SEL internally for BT40N.
E2	E2	AL21	P1.06	GPIO; Connected to nRF21540 CSN pin internally for BT40N.
E3	E3	AK24	P1.07	GPIO
E4	E4	B2	D+	USB D+
E5	E5	B4	D-	USB D-
E6	E6	AK2	P0.10/MISO	GPIO, BT40F, high speed SPI MISO
H0	H0			Ground pad
H1	H1			Ground pad
H2	H2			Ground pad

H3	H3			Ground pad
F3	F3	AK14	P0.18/CSN	GPIO, BT40F, QSPI chip select
F4	F4	E1	VDDH	High Voltage Power Supply, 2.5V to 5.5V. 3.3V for WT02C40C, engineering version.
F5	F5	J1	NC	BT40F, No connect, L,C circuit embedded.
F6	F6	A5	VBUS	5V DC power for USB 3.3V regulator

nRF5340 and NRF7002 Internal Connection

The WLCSP version of nRF5340 and the WLCSP version of nRF7002 are used in the WT02C40C Series combo modules. The internal connections are shown below.

WT02C40C Internal connection			
nRF5340 CLAA		nRF7002 CEAA	
Pin	Port name	Pin	Pin name
J6	P0.12	J5	BUCK-EN
K10	P0.13	B2	QSPI-DATA0
K9	P0.14	B4	QSPI-DATA1
L9	P0.15	A3	QSPI-DATA2
K8	P0.16	B6	QSPI-DATA3
L7	P0.17	C1	QSPI-CLK
K7	P0.18	C3	QSPI-SS
H3	P0.23	B10	IRQ
K2	P0.24	A11	BT-COEX-GRANT
E3	P0.28	B8	BT-COEX-REQ
E2	P0.29	A9	SW-CTRL1/STATUS1
C4	P0.30	A5	BT-COEX-STATUS0
C5	P0.31	B12	IOVDD

Using Internal Load Capacitors for the High Frequency Oscillator

The external load capacitors for the 32MHz crystal are not mounted. An Epson or equivalent +/-10 PPM crystal is connected to XC1 and XC2 pins. The Bluetooth signal frequencies are within specifications if the internal load capacitors are not enabled. Use the following procedures to set the internal load capacitors to 11 pF for BT40F, the Bluetooth signal frequency is measured to be within 5 PPM at 25°C. The settings for WT02C40C are to be determined.

The internal load capacitors can be programmed from 7.0 pF to 20 pF in 0.5 pF steps. The addresses and description of

Base address	Domain	Peripheral	Instance	Secure mapping	DMA security	Description	Configuration
0x50004000 0x40004000	APPLICATION	OSCILLATORS	OSCILLATORS : S OSCILLATORS : NS	US	NA	Oscillator configuration	

registers for programming the value of load capacitors are from the Nordic nRF5340 Product Specifications.

To program the load capacitance, settings in the file cpu_app prj.conf:

CONFIG_SOC_ENABLE_LFXO=y

Programmable capacitance of XC1 and XC2

Bit number	31	30	29	28	27	26	25	24	23	22	21	20	19	18	17	16	15	14	13	12	11	10	9	8	7	6	5	4	3	2	1	0
ID																								B				A	A	A	A	A
Reset 0x00000000	0	0	0	0	0	0	0	0	0	0	0	0	0	0	0	0	0	0	0	0	0	0	0	0	0	0	0	0	0	0	0	0

ID	R/W	Field	Value ID	Value	Description
A	RW	CAPVALUE			Value representing capacitance, calculated using provided equation
B	RW	ENABLE			Enable on-chip capacitors on XC1 and XC2
			Disabled	0	Capacitor disabled (use external caps)
			Enabled	1	Capacitor enabled

Register	Offset	Security	Description	
XOSC32MCAPS	0x5C4		Programmable capacitance of XC1 and XC2	Retained
XOSC32KI.BYPASS	0x6C0		Enable or disable bypass of LFCLK crystal oscillator with external clock source	Retained
XOSC32KI.INTCAP	0x6D0		Control usage of internal load capacitors	Retained

CONFIG_SOC_LFXO_CAP_INT_7PF=y
CONFIG_SOC_HFXO_CAP_INTERNAL=y
CONFIG_SOC_HFXO_CAP_INT_VALUE_X2=25
CONFIG_BUILD_WITH_TFM=y

X2=14 7pf 0x400045c4=0x102
X2=15 7.5pf 0x400045c4=0x103
X2=16 8pf 0x400045c4=0x104
X2=17 8.5pf 0x400045c4=0x105
X2=18 9pf 0x400045c4=0x106

X2=19 9.5pf 0x400045c4=0x107
X2=20 10pf 0x400045c4=0x107
X2=21 10.5pf 0x400045c4=0x108
X2=22 11pf 0x400045c4=0x109 //BT40 default
X2=23 11.5pf 0x400045c4=0x10A
X2=24 12pf 0x400045c4=0x10B
X2=25 12.5pf 0x400045c4=0x10C //recover default
X2=26 13pf 0x400045c4=0x10D
X2=27 13.5pf 0x400045c4=0x10E
X2=28 14pf 0x400045c4=0x10F
X2=29 14.5pf 0x400045c4=0x110
X2=30 15pf 0x400045c4=0x111
X2=31 15.5pf 0x400045c4=0x112 //BC40 default
X2=32 16pf 0x400045c4=0x113
……

Alternatively, the load capacitance can be programmed using commands.

```
C:\Users\Leo>nrfjprog --memrd 0x500045c4
0x500045C4: 0000010C                                |....|

C:\Users\Leo>nrfjprog --memrd 0x500045c4
0x500045C4: 00000102                                |....|

C:\Users\Leo>nrfjprog --memrd 0x500045c4
0x500045C4: 00000102                                |....|

C:\Users\Leo>nrfjprog --memrd 0x500045c4
0x500045C4: 00000102                                |....|

C:\Users\Leo>nrfjprog --memrd 0x500045c4
0x500045C4: 0000010B                                |....|

C:\Users\Leo>nrfjprog --memrd 0x500045c4
0x500045C4: 0000010D                                |....|

C:\Users\Leo>nrfjprog --memrd 0x500045c4
0x500045C4: 0000010C                                |....|

C:\Users\Leo>
```

Powering Up Sequence

The following circuitry is embedded in WT20C40C series combo modules to control powering up sequence. Please use P0.31 to control 3.3V power supply to nRF7002.

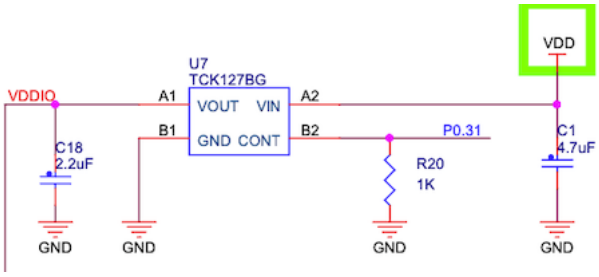

Host Board Design

EV board schematics and Gerber files can be used as reference circuit and ground plane designs.

- A 4 or more layers PCB is recommended.
- WT02C40C series soldering pad footprint is compatible with that of BT40F and BT40N (nRF5340+nRF21540). A host PCB design can accommodate an nRF5340 module, with a power amplifier, or supporting WiFi 6. WT02C40C has pin 17 3.3V DC input to power WiFI 6 SoC, not needed for the BLE modules.

Mounting WT02C40C Module on the Host PCB

To be updated,

The mounting guidelines are applicable to modules with integrated antenna only.

- The size of antenna area varies From a module to another. A ground plane shall cover the castellated pin area of the module or 11 mm from the bottom edge. This ground plane is shown in gray color area below.
- A PCB area without ground or any signal trace shall extend for 10mm or more as shown in yellow color area below.
- EV-WT02C40C Gerber files can be used as a PCB layout example.

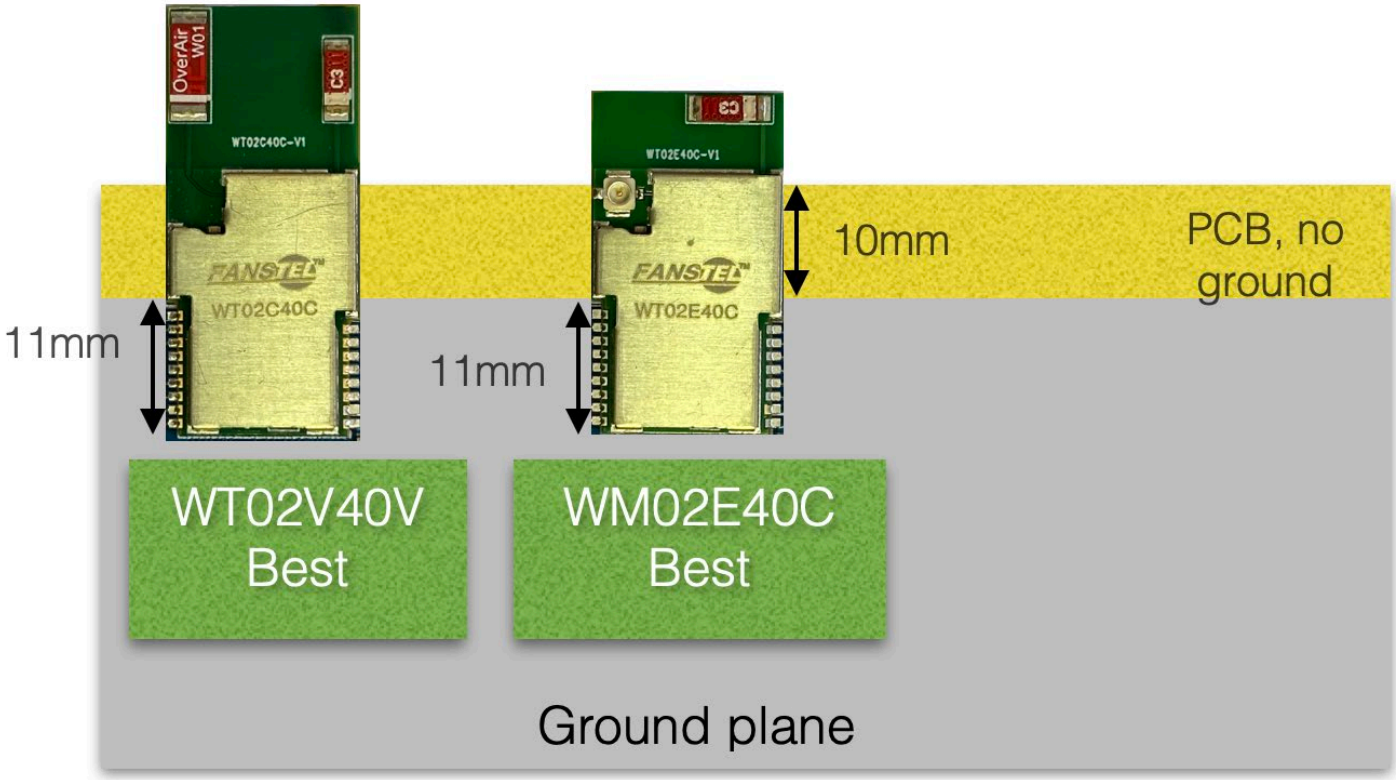

For the best Bluetooth and WiFi range performance, keep all external metal at least 30mm from the antenna area.

Evaluation Board Schematics

EV-WM02C schematics, EV-WM02C Gerber, and EV-WT02P40P Schematics and Gerber files can be download. The schematics and Gerber can be as a reference design, ground plane design, and signal routing guides of a host board using WM02C series module. This EV board design can also be used for evaluation of the combo modules, WT02C40C series.

Use for Evaluation of Combo Module WT02C40C

- WT02C40C is mounted at the U1 location. Pin 17 Vbat is for providing 3.3V DC power to nRF7002.
- U2 is not mounted.
- A power switch is embedded in WT02C40C. nRF5340 P0.31 is used to control the power switch to delay application of power to nRF7002 GPIO pins during powering up.
- WT02P40P has 3-pin pads for connection to a BLE antenna on the host board. It also has 3-pin pads for for connection to a WiFi antenna on the host board.

Use for Evaluation of Companion Module WM02C

- BT40F, an nRF5340 module is mounted at the U1 location. You can use S1 switch to select 1.8V or 3.3V DC power to BT40F VDD, pin 9. This VDD also supplies power to WM02C VDDIO, pin 16 through a power switch, U7. BT40F P0.31 is used to control the power switch to delay application of power to WM02C GPIO pins during powering up.
- For long range Bluetooth/Thread applications, a BT40N or BT40NE can be mounted at this U1 location. VDD must be set to 3.3V.
- The WiFi 6 module under evaluation, WM02C, is mounted at the U2 location.
- WM02C pin 8, Vbat power supply voltage is 3.3V nominal, 3.6V maximum.
- CP2102 operates at 3.3V. If you set VDDIO to 1.8V, LSF0204, U11 voltage level translator shall be enabled.

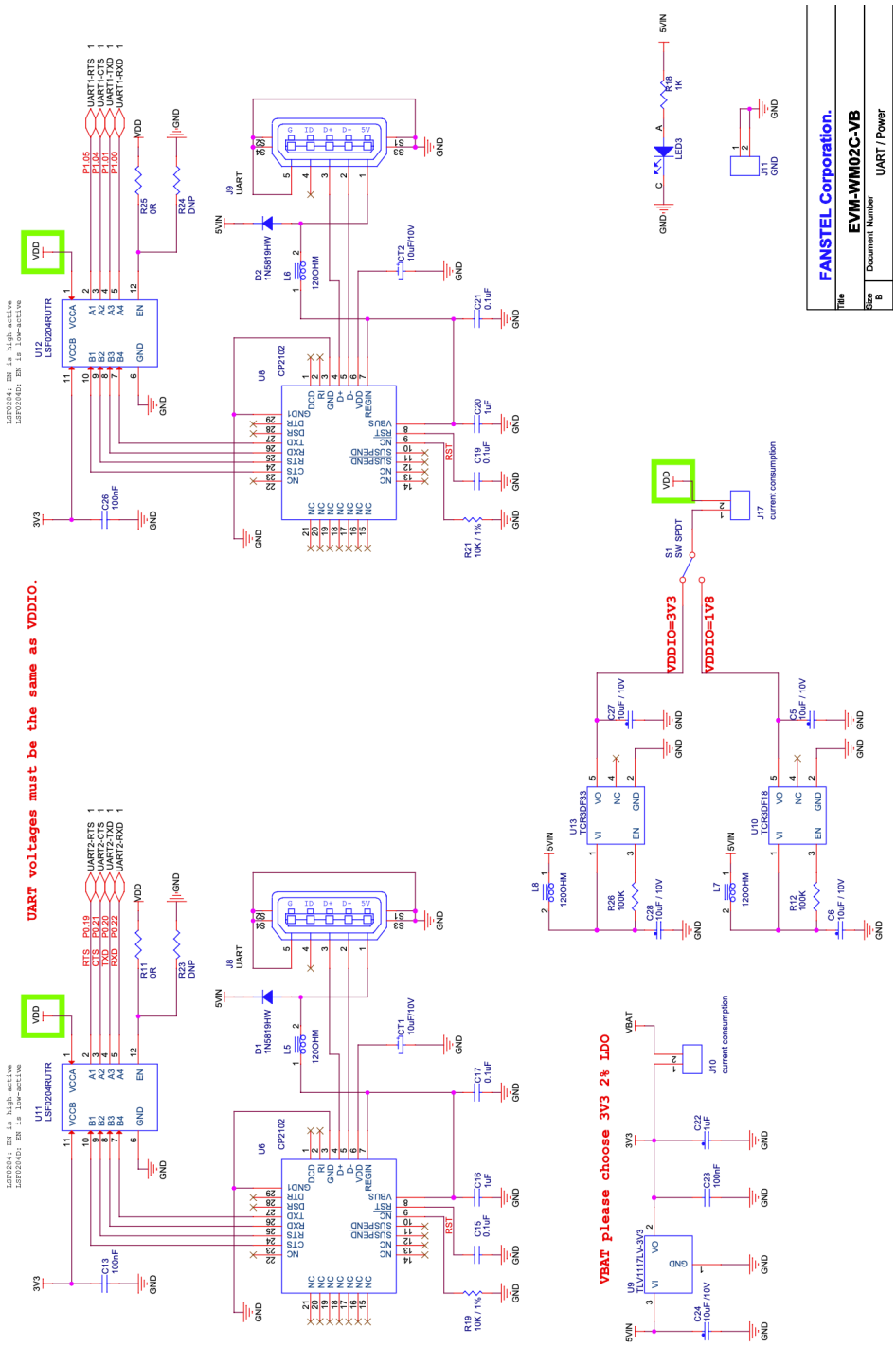

WT02C40C Schematics, page 1

EV-WT02C40C, page 2.

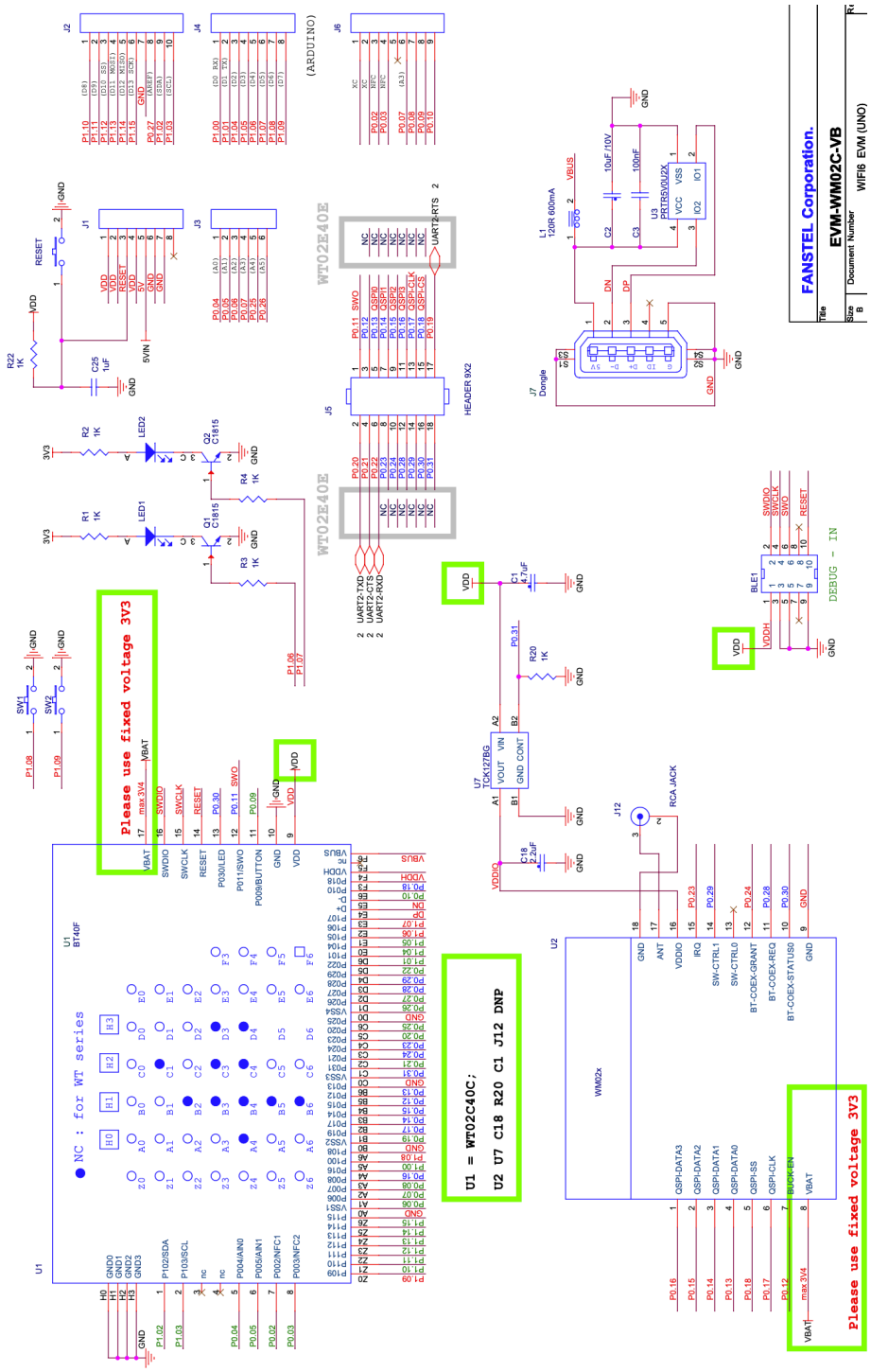

Suggestion for Battery Power Application

Standby current consumption is important for battery-powered product. To reduce host board area, the followings are embedded in modules:

- 32 MHz, 20PPM main crystal. You need to program the value of embedded load capacitance.
- 32.768 KHz, 20PPM sleep crystal and load capacitors.
- 40 MHz crystal for nRF7002.
- Inductors and capacitors required for VDD power supply DC to DC converter.
- Inductors and capacitors required for VDDH power supply DC to DC converter.

No external component is required. DCDC converter shall be enabled to reduce power consumption.

3. Firmware Development

WT02C40C Evaluation Board

An evaluation board consists of the followings:

- Mini USB cable
- Evaluation board
- 10-conductor cable for connection to Nordic nRF53 DK (DK is not included)

The EV board can be programmed by using a Nordic nRF53 DK board, connected as below. (Photo to be updated)

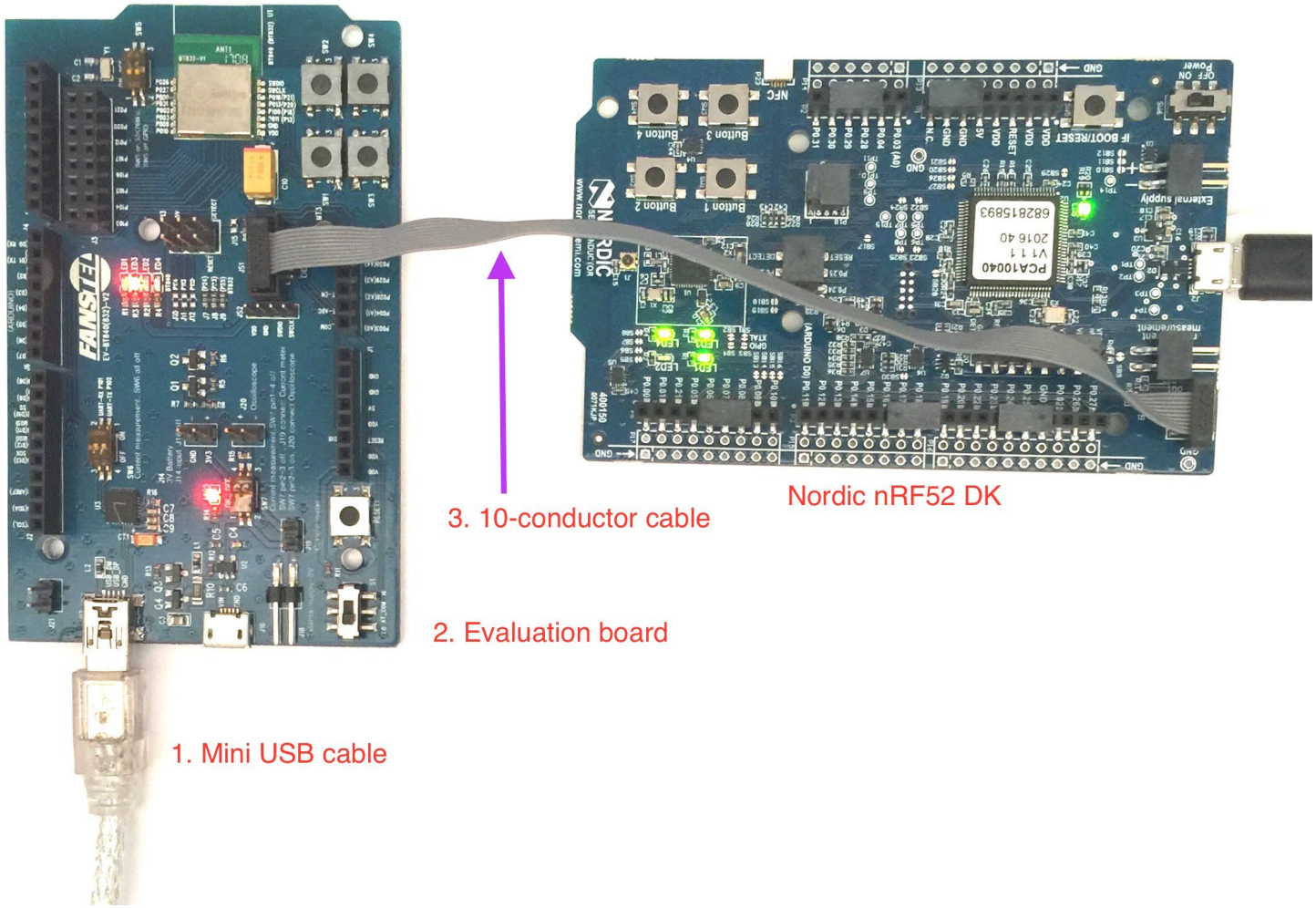

Nordic Development Tools

A Nordic nRF5340 DK is recommended for programming this evaluation board. Visit Nordic website for **nRR5340 DK description and product brief**.

Many application examples can be downloaded from Nordic website.

Some firmware, Android OS, and iOS app codes can be downloaded from **Bluetooth 5 Codes section** of this Fanstel webpage.

http://www.fanstel.com/download-document/

BT40 firmware can be used in all nRF5340 modules without power amplifier, e.g., WT02E40F, WT02E40E, WT02C40C, BT40F and BT40E.

Android OS Apps

The following Android OS apps are available for download from Google Play Store:
BlueNor nrf5x: to use with Bluetooth 5 stacks, AT commands, or Slave firmware. Master firmware does not connect to a smartphone. Source codes can be downloaded from http://www.fanstel.com/download-document/

BlueNor Mesh: to use with BlueNor mesh firmware to send command to any node in a mesh. Node number is displayed when acknowledgement is received. Source codes will be uploaded to Fanstel website when supporting Bluetooth 5.

iOS Apps

The following iOS apps can be downloaded from Apple APP Store.

BlueNor Mesh: to use with BlueNor mesh firmware to send command to any node in a mesh. Node number is displayed when acknowledgement is received.
BlueNor nrf5x firmware, apps, and source codes will be uploaded when ready.

Codes for Evaluation Boards

To be provided.

MAC addresses

Each WT02C40C module is programmed with two MAC addresses. The procedure to read these MAC addresses to be provided.

Setting Regional Transmission Parameters

WiFi transmission power and band edge specifications are region specific. The following parameters are used to pass certification testing. They shall be set as the transmission parameters.

To be provided.

USA and Canada

Europe, UK, and Australia

Japan TELEC

4. Miscellaneous

Soldering Temperature-Time Profile for Re-Flow Soldering

Maximum number of cycles for re-flow is 2. No opposite side re-flow is allowed due to module weight.

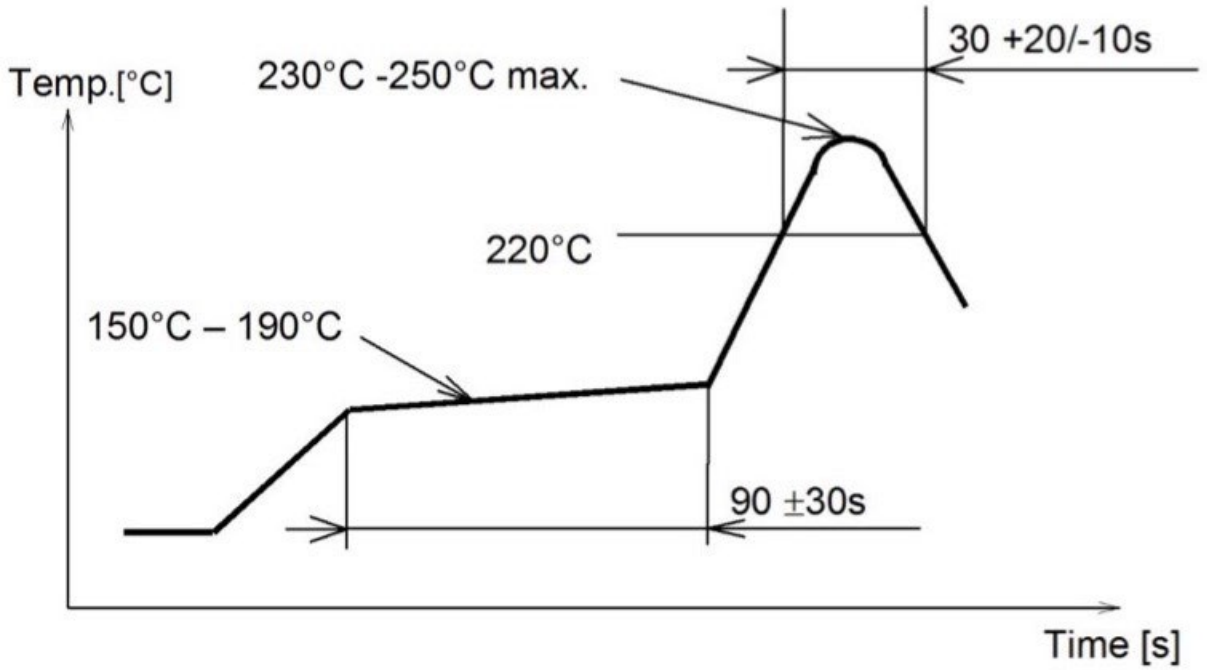

Cautions, Design Notes, and Installation Notes

Failure to follow the guidelines set forth in this document may result in degrading of the product s functions and damage to the product.

Design Notes

(1) Follow the conditions written in this specification, especially the control signals of this module.

(2) The supply voltage has to be free of AC ripple voltage (for example from a battery or a low noise regulator output). For noisy supply voltages, provide a decoupling circuit (for example a ferrite in series connection and a bypass capacitor to ground of at least 47uF directly at the module).

(3) This product should not be mechanically stressed when installed.

(4) Keep this product away from heat. Heat is the major cause of decreasing the life of these products.

(5) Avoid assembly and use of the target equipment in conditions where the products' temperature may exceed the maximum tolerance.

(6) The supply voltage should not be exceedingly high or reversed. It should not carry noise and/or spikes.

(7) this product away from other high frequency circuits.

Notes on Antenna and PCB Layout

(1) Don t use a module with internal antenna inside a metal case.

(2) For PCB layout:

- Avoid running any signal line below module whenever possible,
- No ground plane below antenna,
- If possible, cut-off the portion of main board PCB below antenna.

Installation Notes

(1) Reflow soldering is possible twice based on the time-temperature profile in this data sheets. Set up the temperature at the soldering portion of this product according to this reflow profile.

(2) Carefully position the products so that their heat will not burn into printed circuit boards or affect the other components that are susceptible to heat.

(3) Carefully locate these products so that their temperatures will not increase due to the effects of heat generated by neighboring components.

(4) If a vinyl-covered wire comes into contact with the products, then the cover will melt and generate toxic gas, damaging the insulation. Never allow contact between the cover and these products to occur.

(5) This product should not be mechanically stressed or vibrated when reflowed.

(6) If you want to repair your board by hand soldering, please keep the conditions of this chapter.

(7) Do not wash this product.

(8) Refer to the recommended pattern when designing a board.

(9) Pressing on parts of the metal cover or fastening objects to the metal will cause damage to the unit.

Usage Condition Notes

(1) Take measures to protect the unit against static electricity. If pulses or other transient loads (a large load applied in a short time) are applied to the products, check and evaluate their operation before assembly on the final products.

(2) Do not use dropped products.

(3) Do not touch, damage or soil the pins.

(4) Follow the recommended condition ratings about the power supply applied to this product.

(5) Electrode peeling strength: Do not add pressure of more than 4.9N when soldered on PCB

(6) Pressing on parts of the metal cover or fastening objects to the metal cover will cause damage.

(7) These products are intended for general purpose and standard use in general electronic equipment, such as home appliances, office equipment, information and communication equipment.

Storage Notes

(1)The module should not be stressed mechanically during storage.

(2)Do not store these products in the following conditions or the performance characteristics of the product, such as RF performance will be adversely affected:

- Storage in salty air or in an environment with a high concentration of corrosive gas.
- Storage in direct sunlight
- Storage in an environment where the temperature may be outside the range specified.
- Storage of the products for more than one year after the date of delivery storage period.

(3) Keep this product away from water, poisonous gas and corrosive gas.

(4) This product should not be stressed or shocked when transported.

(5) Follow the specification when stacking packed crates (max. 10).

Safety Conditions

These specifications are intended to preserve the quality assurance of products and individual components. Before use, check and evaluate the operation when mounted on your products. Abide by these specifications, without deviation when using the products. These products may short-circuit. If electrical shocks, smoke, fire, and/or accidents involving human life are anticipated when a short circuit occurs, then provide the following failsafe functions, as a minimum.

(1)Ensure the safety of the whole system by installing a protection circuit and a protection device.

(2)Ensure the safety of the whole system by installing a redundant circuit or another system to prevent a dual fault causing an unsafe status.

Other Cautions

(1)This specification sheet is copyrighted. Reproduction of this data sheets is permissible only if reproduction is without alteration and is accompanied by all associated warranties, conditions, limitations, and notices.

(2)Do not use the products for other purposes than those listed.

(3)Be sure to provide an appropriate failsafe function on your product to prevent an additional damage that may be caused by the abnormal function or the failure of the product.

(4)This product has been manufactured without any ozone chemical controlled under the Montreal Protocol.

(5)These products are not intended for other uses, other than under the special conditions shown below. Before using these products under such special conditions, check their performance and

reliability under the said special conditions carefully to determine whether or not they can be used in such a manner.

- In liquid, such as water, salt water, oil, alkali, or organic solvent, or in places where liquid may splash.
- In direct sunlight, outdoors, or in a dusty environment
- In an environment where condensation occurs.
- In an environment with a high concentration of harmful gas.

(6) If an abnormal voltage is applied due to a problem occurring in other components or circuits, replace these products with new products because they may not be able to provide normal performance even if their electronic characteristics and appearances appear satisfactory.

(7) When you have any question or uncertainty, contact Fanstel.

Packaging and Lot Number

Production modules are delivered in reel, 1000 modules in each reel. Lot number for modules made after May 2019, can be used to track silicon version of SoC, module PCB version, and production test

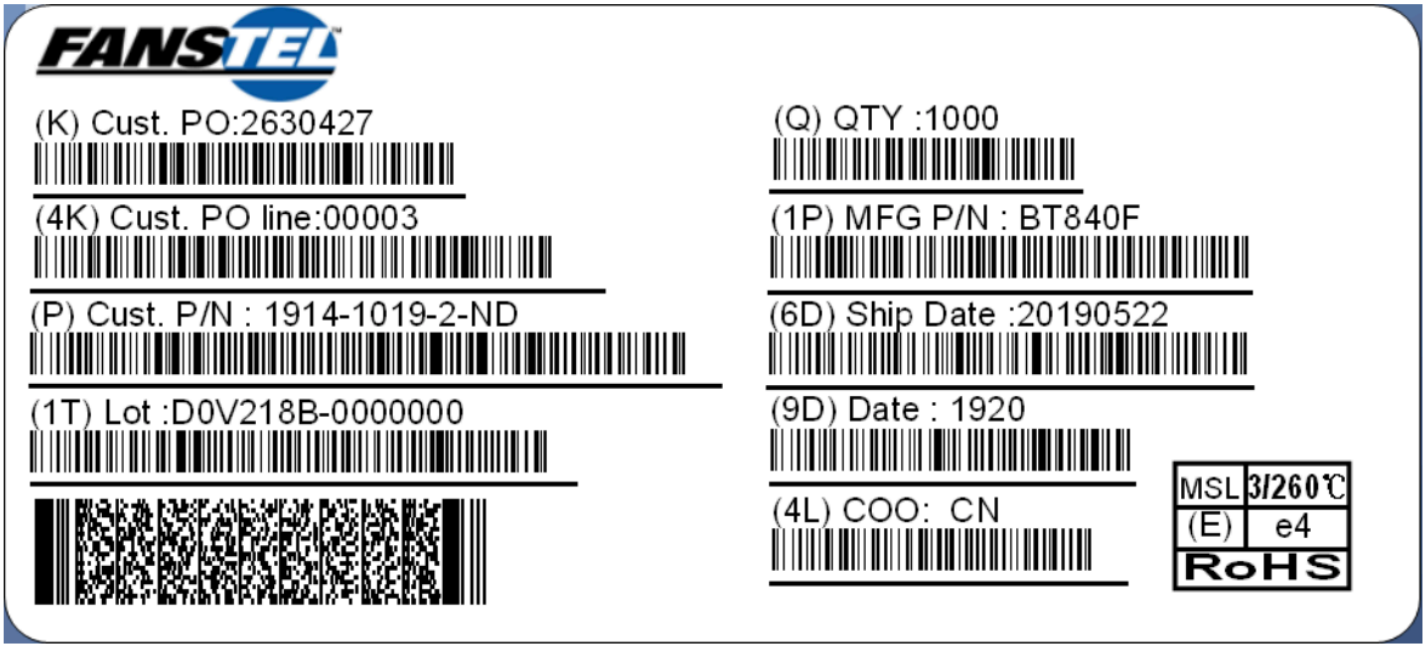

Lot: **D0 V2 18B - 00 00 000**

D0: 2 digits, version number of SoC.
V2: 2 digits, version number of module PCB.
18B: the first 2 digits for production test codes released year and the last digit for month in hex format. A=October, B=November, C=December. 18B was released in November 2018.
00 00 000, 7 digits, reserved for 2nd SoC for modules with 2 SoCs.

code version.

Federal Communications Commission (FCC) Statement

15.21

You are cautioned that changes or modifications not expressly approved by the part responsible for compliance could void the user's authority to operate the equipment.

15.105(b)

This equipment has been tested and found to comply with the limits for a Class B digital device, pursuant to part 15 of the FCC rules. These limits are designed to provide reasonable protection against harmful interference in a residential installation. This equipment generates, uses and can radiate radio frequency energy and, if not installed and used in accordance with the instructions, may cause harmful interference to radio communications. However, there is no guarantee that interference will

not occur in a particular installation. If this equipment does cause harmful interference to radio or television reception, which can be determined by turning the equipment off and on, the user is encouraged to try to correct the interference by one or more of the following measures:

-Reorient or relocate the receiving antenna.
-Increase the separation between the equipment and receiver.
-Connect the equipment into an outlet on a circuit different from that to which the receiver is connected.
-Consult the dealer or an experienced radio/TV technician for help.

This device complies with Part 15 of the FCC Rules. Operation is subject to the following two conditions:
1) this device may not cause harmful interference, and
2) this device must accept any interference received, including interference that may cause undesired operation of the device.

FCC RF Radiation Exposure Statement:

This equipment complies with FCC radiation exposure limits set forth for an uncontrolled environment. End users must follow the specific operating instructions for satisfying RF exposure compliance. This transmitter must not be co-located or operating in conjunction with any other antenna or transmitter.

Revision History

- Feb. 2023, Ver. 0.90: Initial draft release
- April 2023, Ver.0.91: Update module photos and mechanical drawings
- April 2023, Ver. 0.92: Update module mechanical drawings.
- July 2023, Ver. 0.93: Update module photos.
- July 2024, Ver. 0.95: Update for production version.
- Oct. 2024, Ver. 0.96: Update drawings.

Contact Us

Fanstel Corp.
7466 E. Monte Cristo Ave. Scottsdale AZ 85260
Tel. 1 480-948-4928
Fax. 1-480-948-5459
Email: info@fanstel.com
Website: www.fanstel.com

Taiwan:

Fanstel Corp.
10F-10, 79 Xintai Wu Road
Xizhu, New Taipei City, Taiwan 22101
泛世公司
臺灣省新北市汐止區新臺五路 79 號 10 樓之 10, 22101
Tel. 886-2-2698-9328
Fax. 886-2-2698-4813
Email: info@fanstel.com
Website: www.fanstel.com

China:

Fanstel Technologies Corp.
11 Jiale Street
Ping-Dih, Long-Gang, Shen Zhen, GD 518117
泛世康科技(深圳)有限公司
廣東省深圳市龍崗區坪地鎮佳樂街 11 號
Tel. 86-755-8409-0928
Fax. 86-755-8409-0973
QQ. 3076221086
Email: info@fanstel.com
Website: www.fanstel.com

Federal Communications Commission (FCC) Statement

15.21

You are cautioned that changes or modifications not expressly approved by the part responsible for compliance could void the user's authority to operate the equipment.

15.105(b)

This equipment has been tested and found to comply with the limits for a Class B digital device, pursuant to part 15 of the FCC rules. These limits are designed to provide reasonable protection against harmful interference in a residential installation. This equipment generates, uses and can radiate radio frequency energy and, if not installed and used in accordance with the instructions, may cause harmful interference to radio communications.

However, there is no guarantee that interference will not occur in a particular installation. If this equipment does cause harmful interference to radio or television reception, which can be determined by turning the equipment off and on, the user is encouraged to try to correct the interference by one or more of the following measures:

-Reorient or relocate the receiving antenna.

-Increase the separation between the equipment and receiver.

-Connect the equipment into an outlet on a circuit different from that to which the receiver is connected.

-Consult the dealer or an experienced radio/TV technician for help.

This device complies with Part 15 of the FCC Rules. Operation is subject to the following two conditions:

1) this device may not cause harmful interference, and

2) this device must accept any interference received, including interference that may cause undesired operation of the device.

FCC RF Radiation Exposure Statement

The antenna(s) used for this transmitter must be installed to provide a separation distance of at least 20 cm from all persons and must not be co-located or operating in conjunction with any other transmitter, except in accordance with FCC multi-transmitter product procedures.

This equipment should be installed.

Note: The end product shall has the words "Contains Transmitter Module FCC ID: X8WWT02C40C

Canada, Industry Canada (IC)
This Class B digital apparatus complies with Canadian ICES-003
Cet appareil numérique de classe B est conforme à la norme NMB-003.
This device complies with Industry Canada licence-exempt RSS standard(s). *Operation is subject to the following two conditions: (1) this device may not cause interference, and (2) this device must accept any interference, including interference that may cause undesired operation of the*
Le present appareil est conforme aux CNR d'Industrie Canada applicables auxappareils radio exempts de licence.L'exploitation est autorisée aux deux conditions suivantes:
(1) l'appareil ne doit pas produire de brouillage, et
(2) l'utilisateur de l'appareil doit accepter tout brouillage adioélectrique subi, même si le brouillage est susceptible d'en compromettre le fonctionnement.

Conformité des appareils de radiocommunication aux limites d'exposition humaine aux radiofréquences (CNR-102)
L'ordinateur utilise des antennes intégrales à faible gain qui n'émettent pas un champ électromagnétique supérieur aux normes imposées par Santé Canada pour la population. Consultez le Code de sécurité 6 sur le site Internet de Santé Canada à l'adresse suivante : http://www.hc-sc.gc.ca/
L'énergie émise par les antennes reliées aux cartes sans fil respecte la limite d'exposition aux radiofréquences telle que définie par Industrie Canada dans la clause 4.1 du document CNR-102, version 4.

Caution: Exposure to Radio Frequency Radiation.
L'antenne ou les antennes utilisées pour cet émetteur doivent être installées de manière à assurer une distance de séparation d'au moins 20 cm par rapport à toutes les personnes et ne doivent pas être situées à proximité ou fonctionner en conjonction avec un autre émetteur, sauf conformément aux procédures de la FCC relatives aux produits multi-émetteurs. Cet équipement doit être installé.

(Modular approval) End Product Labeling:
The final end product must be labeled in a visible area with the following: “Contains IC: 4100A-WT02C40C
Le produit final doit être étiqueté dans une zone visible avec ce qui suit “Contient IC : 4100A-WT02C40C

OEM statement
The Original Equipment Manufacturer (OEM) must ensure that the OEM modular transmitter must be labeled with its own FCC ID number. This includes a clearly visible label on the outside of the final product enclosure that displays the contents shown below. If
the FCC ID is not visible when the equipment is installed inside another device, then the outside of the device into which the equipment is installed must also display a label referring to the enclosed equipment.
The end product with this module may subject to perform FCC part 15B unintentional emission test requirement and be properly authorized while installation to host(s), and platform, and integrator are obligated to have its manual or instruction with the related compliance warning to end users.
This device is intended for OEM integrator only

The end product with this module may be subject to re-evaluate RF exposure as per 47CFR §

2.1091, and §2.1093 if antenna or usage, including co-located usage of other transmitters, of the subsequent

installation are changed.

This radio transmitter has been approved by FCC/Innovation, Science and Economic Development Canada to operate with the antenna types listed below, with the maximum permissible gain indicated. Antenna types not included in this list that Have a gain greater than the maximum gain indicated for any type listed are strictly prohibited for use with this device.
PCB Trae antennas: 2.34 dBi dipole antennas: 6.15dBi
Cet émetteur radio a été approuvé par FCC/Innovation, Science et Développement économique Canada pour fonctionner avec les types d'antennes répertoriés ci-dessous, avec le gain maximal autorisé indiqué. Les types d'antenne non inclus dans cette liste qui ont un gain supérieur au gain maximum indiqué pour tout type répertorié sont strictement interdits pour une utilisation avec cet appareil.
Antennes PCB Trace : 2,34 dBi Antennes dipôles : 6,15 dBi

NCC 警語:

取得審驗證明之低功率射頻器材，非經核准，公司、商號或使用者均不得擅自變更頻率、加大功率或變更原設計之特性及功能。

低功率射頻器材之使用不得影響飛航安全及干擾合法通信;經發現有干擾現象時，應立即停用，並改善至無干擾時方得繼續使用。

前述合法通信，指依電信管理法規定作業之無線電通信。低功率射頻器材須忍受合法通信或工業、科學及醫療用電波輻射性電機設備之干擾。