MEDLINE IMPROVING EFFICIENCY CARELINE IMPROVING EFFICIENCY

Model Name: ABLRF Manufacture: LINAK A/S 、
Address: Group Headquarters,Smedevænget 8, Guderup DK-6430 Nordborg, Denmark

Analogue input to Bluetooth Low energy - ABL **Data sheet**

WE IMPROVE YOUR LIFE

LINAK®

LINAK.COM/MEDLINE-CARELINE

ABLRF

With the small ABLRF print it is possible to convert analogue input to Bluetooth Low energy. It is possible to use ABLRF print as attendant control or hand controls integrated inside rails of ie. toilet solution or adjustable washbasin.

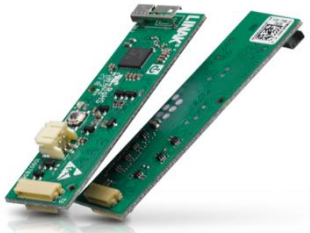

ABL offers easy access to different positioning functions. Another benefit is high adaptation to the customers application needs. ABLRF is made for easy build-in.

Further benefits are included in the ABLRF print and can be used for third party products. Specific software makes it possible to control bed side rail or brake.

Features and Options:

- The ABLRF print can convert switch mode to BLE
- Placed conveniently in application allowing wireless control of the application
- 10 analogue input
- 4 open collector outputs
- Input type: Analogue switch
- Output type: Open collector
- Prepared for battery operation (3-3.3V)
- There is no IP rating as standard. The customer must ensure a proper application design and build-in of the ABLRF unit to achieve the correct IP degree (e.g. IPX4).
- Cables: Not included
- Number of connectors: 3
- Paring: LINAK std. methods

Usage:

- Operation temperature: +5 °C to +40 °C
- Storage temperature: -10 °C to +50 °C
- Compatibility: Compatible with LINAK Analogue/OpenBus control boxes with BLE. Please contact LINAK.
- Relative humidity: 20% to 80% – non-condensing
- Atmospheric pressure: 700 to 1060 hPa
- Meters above sea level: Max. 3000 meters
- Approvals: IEC60601-1
  ANSI/AAMI
  ES60601-1
  CAN/CSA-22.2 No 60601-1

ABLRF
Ordering example:

ABL ordering options

	ABL				
Functionality	V1	**V0** = V0	**V1** = V1	**V2** = V2	**XX** = Special
Housing	0	**0** : No Housing	**X** = Special		
Not Used	0	**0** = None	**X** = Special		
Not Used	0	**0** = None	**X** = Special		
Not Used	0	**0** = None	**X** = Special		
Not Used	0	**0** = None	**X** = Special		
Not used	0	**0** : None	**X** = Special		
Not used	0	**0** : None	**X** = Special		
Not used	0	**0** : None	**X** = Special		
Not Used	0	**0** : None	**X** = Special		
Not Used	0	**0** : None	**X** = Special		

Chosen item number: **ABLV10000000000**

Cables must be ordered separately

FCC/IC Statements

This device complies with Industry Canada licence-exempt RSS standard(s). Operation is subject to the following two conditions: (1)this device may not cause interference, and(2) this device must accept any interference, including interference that may cause undesired operation of the device.

Le présent appareil est conforme aux CNR d'Industrie Canada applicables auxappareils radio exempts de licence. L'exploitation est autorisée aux deux conditions suivantes :(1) l'appareil ne doit pas produire de brouillage, et(2) l'utilisateur de l'appareil doit accepter tout brouillage radioélectrique subi, même si le brouillage est susceptible d'en compromettre lefonctionnement.

NOTE: This equipment has been tested and found to comply with the limits for a Class B digital device, pursuant to part 15 of the FCC Rules. These limits are designed to provide reasonable protection against harmful interference in a residential installation. This equipment generates uses and can radiate radio frequency energy and, if not installed and used in accordance with the instructions, may cause harmful interference to radio communications. However, there is no guarantee that interference will not occur in a particular installation. If this equipment does cause harmful interference to radio or television reception, which can be determined by turning the equipment off and on, the user is encouraged to try to correct the interference by one or more of the following measures:

- Reorient or relocate the receiving antenna.

- Increase the separation between the equipment and receiver.

-Connect the equipment into an outlet on a circuit different from that to which the receiver is connected.

-Consult the dealer or an experienced radio/TV technician for help

Changes or modifications not expressly approved by the party responsible for compliance could void the user's authority to operate the equipment.

This device complies with Part 15 of the FCC Rules. Operation is subject to the following two conditions:

(1) this device may not cause harmful interference, and (2) this device must accept any interference received, including interference that may cause undesired operation.

Connectors

Connectors on PCB

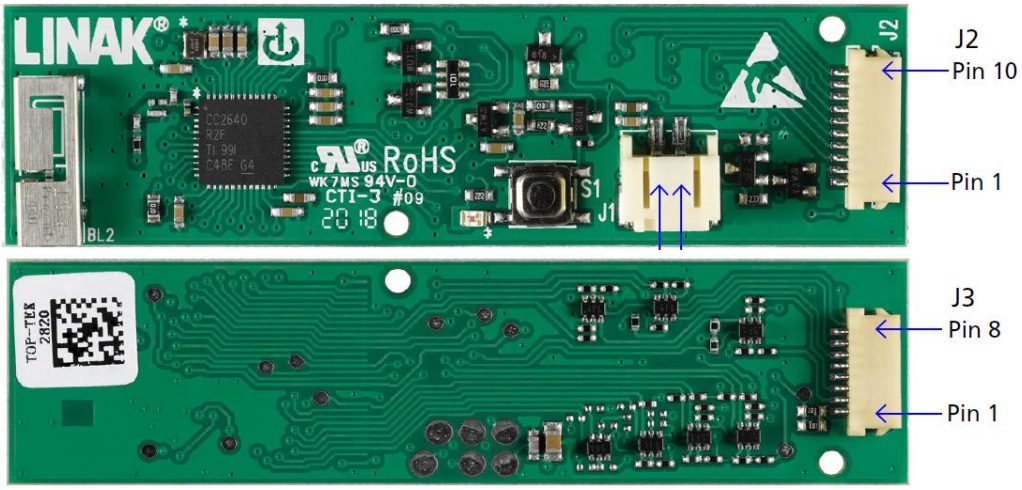

10P connector (J2):

Pin	Text	Default (V0 / V1 / V2)
3 (input 1)	Active when connected to Pin 2 (GND)	I0 / I10 / I20
4 (input 2)		I1 / I11 / I21
5 (input 3)		I2 / I12 / I22
6 (input 4)		I3 / I13 / I23
7 (input 5)		I4 / I14 / I24
8 (input 6)		I5 / I15 / I25
9 (input 7)		I6 / I16 / I26
10 (input 8)		I7 / I17 / I27

8P Connector (J3):

Pin	Text	Default (V0 / V1 / V2)
2 (input 9)	Active when connected to Pin 8 (GND)	I8 / I18 / I28
3 (input 10)		I9 / I19 / I29
4 (output 4)	Output is active when LED is active. Output is open collector type.	LED4 / LED14 / LED24
5 (output 3)		LED3 / LED13 / LED23
6 (output 2)		LED2 / LED12 / LED22
7 (output 1)		LED1 / LED11 / LED21

General:

Function	Text	Default (V0 / V1 / V2)
Direct Pairing Key A	To enter direct pairing mode. Can be used in combination with Direct Pairing Key's	S1 / S1 / S1
Direct Pairing Key B		Not used
Direct Pairing Key C		Not used
OEM Data	OEM ID (#1) Type (#2)	OEM ID: 000000001 OEM Type: 0000

Open Collector principal:

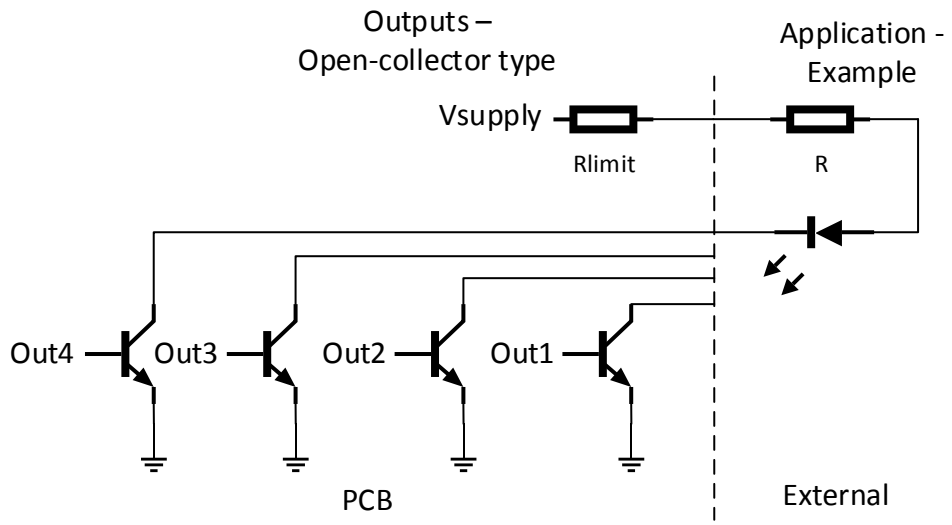

Dimensions

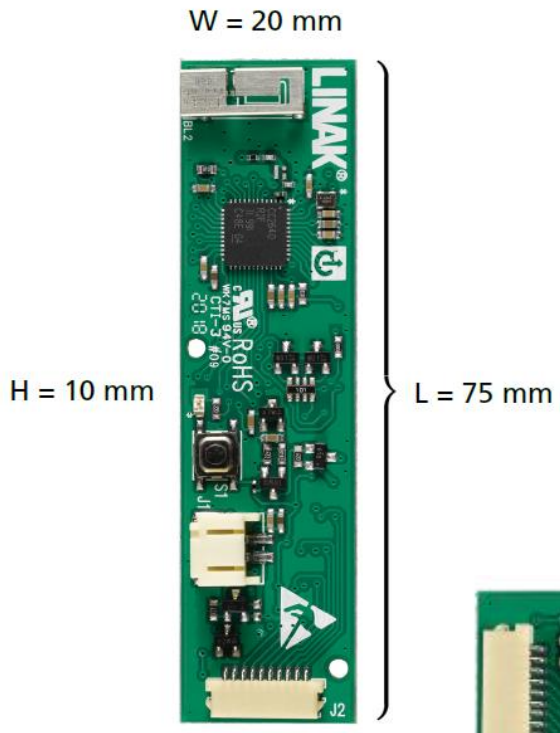

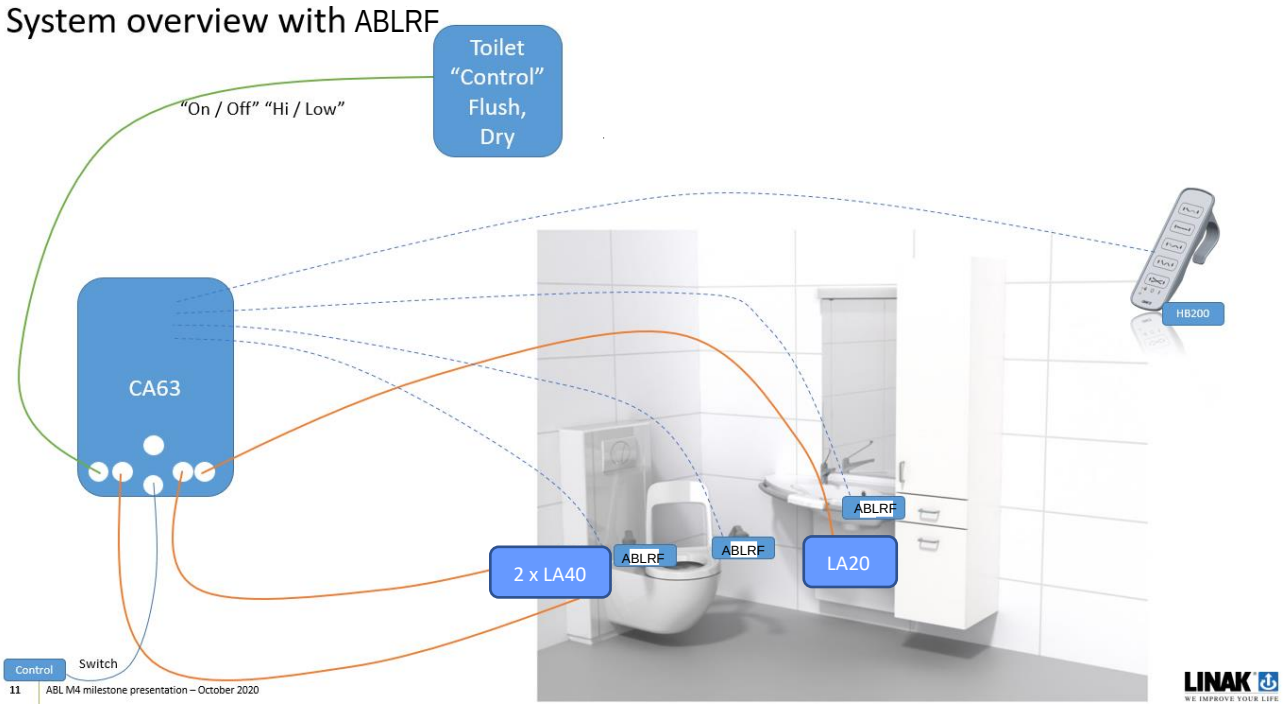

This is an example of applications for the ABLRF:
The wireless connections are shown with the blue dotted lines. The wired connections are shown with the orange solid lines and green solid lines.

Let's take the toilet as example.
The toilet is not made by LINAK. It could be made by "TOILETMANUFACTURER-IN-USA".
TOILETMANUFACTURER-IN-USA makes almost everything. He casts the ceramic toilet body, he fits the plumbing, he builds the controller panel for the toilet. The controller panel (not visible on the picture) has switches, that would control the toilet functions such as:

- Movement up and down
- Flushing
- Dry fan
- Other…

For the movement up and down, TOILETMANUFACTURER-IN-USA buys all the electrical components shown on the picture above from LINAK.
The controller panel made by TOILETMANUFACTURER-IN-USA is connected to the LINAK ABLRF. Both circuits are embedded inside the toilet somewhere, protected from water etc.

ABLRF converts the switch signal to wireless signal. The wireless signal is received by CA63 which activates the output lines, so that the 2 x LA40 will move the toilet.

Terms of use
The user is responsible for determining the suitability of LINAK products for specific application. LINAK takes great care in providing accurate and up-to-date information on its products.
However, due to continuous development in order to improve its products, LINAK products are subject to frequent modifications and changes without prior notice. Therefore, LINAK cannot guarantee the correct and actual status of said information on its products.
While LINAK uses its best efforts to fulfil orders, LINAK cannot, for the same reasons as mentioned above, guarantee the availability of any particular product. Therefore, LINAK reserves the right to discontinue the sale of any product displayed on its website or listed in its catalogues or other written material drawn up by LINAK.
All sales are subject to the Standard Terms of Sale and Delivery for LINAK. For a copy hereof, please contact LINAK.