HOMELINE
IMPROVING COMFORT

# Actuator LA10 system
## User manual

LINAK.COM/HOMELINE

LINAK®
WE IMPROVE YOUR LIFE

# Contents

**Preface** ..... **3**

**Valid for** ..... **4**

**Important information** ..... **5**
- Safety instruction ..... 5
- General ..... 5
- Safety issues ..... 6
- Before installation, re-installation, or troubleshooting ..... 7
- Before start-up ..... 7
- During operation ..... 7
- Misc ..... 7

**Only for EU markets** ..... **8**

**Only for non-EU markets** ..... **8**

**Misuse** ..... **8**

**Repairs** ..... **9**

**Manufacturer's declaration** ..... **9**

**Misc. on the HOMELINE® system** ..... **10**
- Warranty ..... 10
- Maintenance ..... 10

**System overview** ..... **11**
- Description of the HOMELINE® LA10 Standard system ..... 12
- How to pair ..... 12
- Mounting the locking device ..... 13

**Disposal of LINAK products** ..... **14**
- Main groups of disposal ..... 14
- Disposal of batteries ..... 14

**Labels** ..... **15**

**Drawing appendix** ..... **17**

**Addresses** ..... **22**

# Preface

We are delighted that you have chosen a product from LINAK®.

LINAK systems are high-tech products based on many years of experience in the manufacture and development of actuators, electric control boxes, controls and chargers.

This User Manual does not address the end-user. It is intended as a source of information for the manufacturer of the equipment or system only, and it will tell you how to install, use and maintain your LINAK electronics. It is the responsibility of the manufacturer of the end-use product to provide a User Manual where relevant safety information from this manual is passed on to the end-user.

We are sure that your LINAK product/system will give you many years of problem-free operation.

Before our products leave the factory they undergo full function and quality testing. Should you nevertheless experience problems with your LINAK product/system, you are always welcome to contact your local dealer.

LINAK subsidiaries and some distributors situated all over the world have authorised service centres, which are always ready to help you.

LINAK provides a warranty on all its products. This warranty is, however, subject to correct use in accordance with the specifications, maintenance being done correctly, and any repairs being carried out at a service centre, which is authorised to repair LINAK products.

Changes in installation and use of LINAK products/systems can affect their operation and durability.
The products are not to be opened by unauthorised personnel. You can review the full terms of the LINAK warranty on the LINAK website [LINK].

The User Manual has been written based on our present technical knowledge. We are constantly working on updating the information and we therefore reserve the right to carry out technical modifications.

**LINAK A/S**

# Valid for

This User Manual is valid for the following products:

(See the first 3 - 5 characters on the label)

| | |
|---|---|
| Actuators: | LA10 |
| Power supply: | SMPS001, SMPS002 or SMPS006 |
| Controls: | HC05 Wireless, HC10 Wireless, HB10 Wireless or BP12 |
| Accessories: | BLE2DC, CP001, CP002, CP003 or USB2DC |

## Important information

Important information on LINAK® products can be found under the following headings:

**Warning!**
Failure to comply with these instructions may result in accidents involving serious personal injury.

Failing to follow these instructions can result in the product being damaged or being destroyed.

---

## Safety instruction

### General

Safe use of the system is possible only when the operating instructions are read completely and the instructions contained are strictly observed.

Failure to comply with instructions marked with the "NOTE" symbol may result in serious damage to the system or one of its components.

It is important for everyone who is to connect, install, or use the systems to have the necessary information and access to this User Manual. Follow the instructions for mounting – risk of injury if these instructions are not followed.

The appliance is not intended for use by young children or infirm persons without supervision.

If there is visible damage on the product it must not be installed.

Note that during construction of applications, in which the actuator is to be fitted, there must be no possibility of personal injury, for example the squeezing of fingers or arms.

Only the power supply type SMPS001, SMPS002 or SMPS006, shall be used with the system.
The power supply shall not be covered while operating to allow sufficient cooling of this appliance.

...to be continued

Assure free space for movement of application in both directions to avoid blockade.

The appliance is only to be used with the power supply unit provided with the appliance.

---

**Safety issues**

The builder of the equipment shall ensure that the use of the component complies with relevant standards – like the Machine Directive. Care must be taken to avoid squeezing of cables as it can cause movement of the system!

The SMPS001/002/006 must not be packed in heat insulating material, but must be placed so that it can emit waste heat to the surroundings. There are no ventilation holes to consider, the SMPS emits heat through its surface.

Only the power supply type SMPS001, SMPS002 or SMPS006, shall be used with the system.

**Before installation, re-installation, or troubleshooting**

- Stop the actuators
- Pull out the mains plug.
- Relieve the actuators of any loads, which may be released during the work.
- If the actuator is battery-powered, disconnect the battery.

**Before start-up**

- Make sure that the system has been installed as instructed in this User Manual.
- Make sure that the voltage of the actuator system/SMPS is correct before the system is connected to the mains.
- System connection. The individual parts must be connected before the actuator system/SMPS is connected to the mains. See the User Manual for LINAK actuators, if necessary.

**During operation**

- If the actuator system makes unusual noise or smells, switch off the mains voltage immediately.
- Take care that the cables are not damaged.
- The products must only be used in an environment, that corresponds to their IP protection.
- Do not start movement without having the chair in sight and having secured against potential collisions.
- Preferably, use a battery-driven chair and use the battery for backup emergency reclining in case of power failure.
- When battery is low, the chair can only recline
- The self-locking actuators cannot move when not energised.
- Put a string on the remote to ensure that it is always within reach.
- Charging points are designed to disconnect easily.
  - The chair should be equipped with a small extension cable that disconnects when the cable is pulled.
  - Optionally, the chair can be equipped with a magnetic connector which disconnects at less force and independently of pull direction.

**Misc.**

Updated manuals and declarations can always be found here:
www.linak.com/homeline

## Only for EU markets

⚠ This appliance can be used by children aged from 8 years and above and persons with reduced physical, sensory or mental capabilities or lack of experience and knowledge if they have given supervision or instruction concerning use of the appliance in a safe way and understand the hazards involved.

⚠ Children shall not play with the appliance. Cleaning and user maintenance shall not be made by children without supervision.

## Only for non-EU markets

⚠ Persons who do not have the necessary experience or knowledge of the product/products must not use the product/products. Besides, persons with reduced physical, sensory or mental abilities must not use the product/products, unless they are under surveillance or they have been thoroughly instructed in the use of the apparatus by a person who is responsible for the safety of these persons.

⚠ Moreover, children must be under surveillance to ensure that they do not play with the product.

## Misuse

⚠ Do not overload the actuators – this can cause danger of personal injury and damage to the system.

⚠ When the actuator is in fully retracted position, the load on the actuator must not exceed specified max. self-lock.

⚠ Do not use the system in environments other than the intended indoor use

# Repairs

In order to avoid the risk of malfunction, all HOMELINE® repairs must only be carried out by authorised LINAK service centres or repairers, as special tools must be used and special gaskets must be fitted. Products under warranty must also be returned to authorised LINAK service centres. Further information on the LINAK warranty can be found on the LINAK website [LINK].

**Warning!**
If any of the HOMELINE® products are opened, there will be a risk of subsequent malfunction.

**Warning!**
The HOMELINE® systems are not resistant to cutting oil.

# Manufacturer's declaration

**DECLARATION OF INCORPORATION OF PARTLY COMPLETED MACHINERY**
**2006/42/EC ANNEX II B**

**LINAK A/S**
Smedevænget 8
DK - 6430 Nordborg

Herewith declares that LINAK HOMELINE® products as characterized by the following models and types:

| | |
|---|---|
| Control Boxes | CB9H, CBH Advanced, CBH Basic |
| Linear Actuators | LA27, LA29, LA31 HOMELINE |
| Dual Actuators | TD3, TD4, TD5 |
| Controls | HB10 RF, HB20RF, HB60, HC10, HC10RF, HC20RF, HC40 |
| Accessories | Bluetooth Adapter, DC CONNECTOR, LED Lightbox, Lightplug001, Massage Motor, SMPS001, SMPS001, SMPS002, SMPS006 |

comply with the following parts of the Machinery Directive 2006/42/EC, ANNEX I, *Essential health and safety requirements relating to the design and construction of machinery*:

1.5.1 Electricity supply

The relevant technical documentation is compiled in accordance with part B of Annex VII and that this documentation or part hereof will be transmitted by post or electronically to a reasoned request by the national authorities.

**This partly completed machinery must not be put into service until the final machinery into which it is to be incorporated has been declared in conformity with the provisions of the Machinery Directive 2006/42/EC where appropriate.**

Nordborg, 2019-10-21

**LINAK A/S**
John Kling, B.Sc.E.E.
Regulatory Affairs Manager
Authorized to compile the relevant technical documentation

Original Declaration

To be updated

# Misc. on the HOMELINE® system

## Warranty

This HOMELINE product is subject to warranty pursuant to the terms of LINAK HOMELINE Warranty Paper, available on the LINAK website [link].

## Maintenance

Clean dust and dirt on the outside of the system at appropriate intervals and inspect for damage and breaks.
Inspect the connections, cables, and plugs and check for correct functioning as well as fixing points.

**The cleaners and disinfectants must not be highly alkaline or acidic (pH value 6-8).**

# System overview

The LA10 system is connected to the mains via an SMPS001/002/006 and controlled by a Bluetooth® hand control or the mobile App.

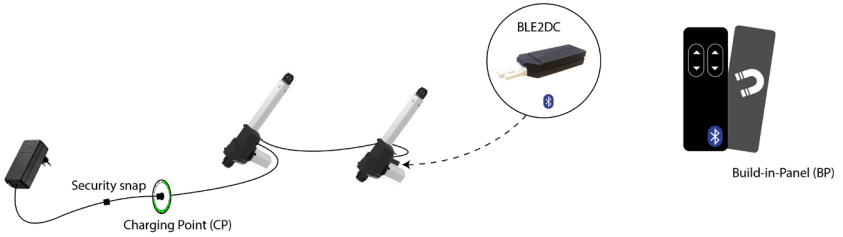


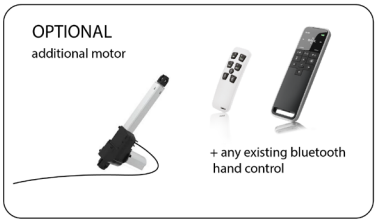


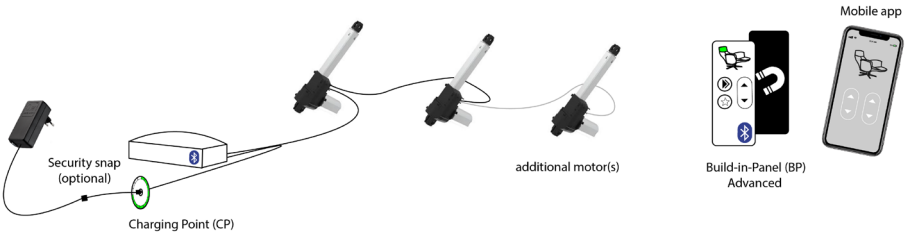

# Description of the HOMELINE® LA10 Standard system

A typical LA10 Standard system consists of:

- LA10 linear actuator(s)
- SMPS001, SMPS002 or SMPS006 power supply
- BP 12 Wireless Control Unit
- MB001 Mount for Control Unit
- CP001, CP002 or CP003 charging point
- BLE2DC Bluetooth plug

**Electric connection:**

- Plug the BLE2DC dongle into a DC port of one of the LA10 actuators in the system.
- Connect the actuators in the system in series.
- Connect the SMPS unit to one of the LA10 linear actuators via a DC port and switch on the mains.
- Finally set up the wireless control unit to the system, by pressing the two top buttons on the control unit within the first 3 minutes after connecting the system to the mains.

Please note that the SMPS must only be connected to the voltage stated on the label.

The LA10 actuator is a small actuator designed for applications such as pedestal recliners.

**Usage:**

- Duty cycle: 2 minutes continuous use followed by 18 minutes pause
- Ambient temperature: 5 to 40 °C (the actuator must also be at this temperature)

**Warning!**

- If the actuator does not work as described above, the risk of injury due to squeezing can arise. The actuator must therefore immediately be sent for service at the nearest, authorised LINAK workshop or repairer.
- Only use the actuator within specified working limits.
- Do not sideload the actuator.

# How to pair

The system features Bluetooth® Low Energy technology, which makes it capable of being controlled via the wireless LINAK® hand controls. Furthermore, it makes it possible to control the bed via the Bed Control App. However, it can only receive commands from one device at a time, so the user must wait 5 seconds without pushing a button before it is possible to use another control/mobile device.

**Pairing**

1. Connect the system to the mains via the connection cable.
2. The LA10 is in pairing mode for 3 minutes.
   Press the two top buttons on the hand control at the same time.

## Mounting the locking device

To ensure optimal cable relief on the SMPS001/002 a locking device (0705889) should be used. Follow the guide below on how to fix the locking device on the SMPS.

1. Take the SMPS

2. Plug the 2-poled DC cable in the SMPS

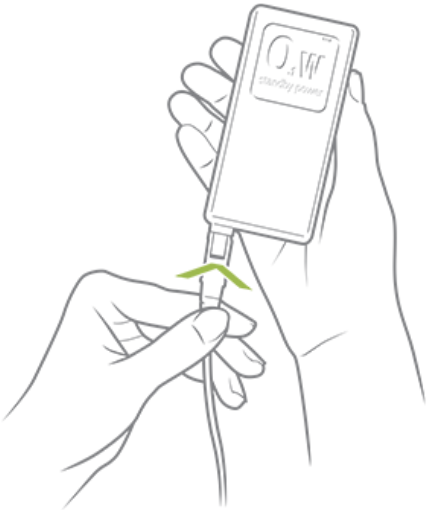

3. Slide the locking device on

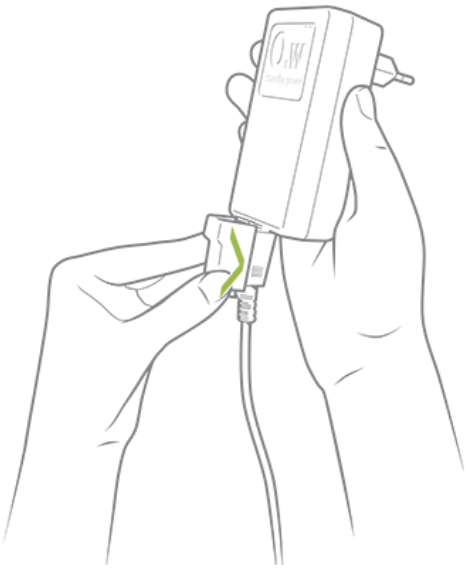

4. The cable is now fully secured.

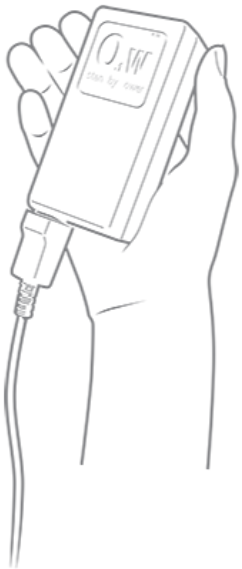

# Disposal of LINAK products

As LINAK customers often ask us how our products can be disposed of or scrapped, we have prepared this guidance that enables a classification to different waste fractions for recycling or combustion.

**Guidance**
We recommend our products be disassembled as much as possible and divided into different waste groups for recycling or combustion.
For example, waste can be sorted into metals, plastics, cable scrap, combustible material and recoverable resources.
Some of these main groups can be further divided into subgroups; e.g. metal can be divided into steel/aluminium/copper and plastic can be divided into ABS/PA/PE/PP.
As an example, the table below breaks down the different components in LINAK products to various recycling groups:

| Product | Components | Recycling group |
|---|---|---|
| **Column/ Actuator :** | Spindle and motor<br>Plastic housing<br>Cable<br>PC boards | Metal scrap<br>Plastic recycling or combustion<br>Cable scrap or combustion<br>Electronics scrap |
| **Control Box :** | PC boards<br>Plastic housing<br>Cable<br>Transformer | Electronics scrap<br>Plastic recycling or combustion<br>Cable scrap or combustion<br>Metal scrap |
| **Handset/Control :** | Plastic housing<br>Cable<br>PC boards | Plastic recycling or combustion<br>Cable scrap or combustion<br>Electronics scrap |

By now, almost all our cast plastic parts are supplied with an interior code for plastic types and fibre contents, if any.

# Main groups of disposal

| Product main groups | Metal scrap | Cable scrap | Electronics scrap | Plastic recycling or combustion | Comments |
|---|---|---|---|---|---|
| **LA10** | X | X | X | X | |
| **SMPS001 / 002 / 006** | | | X | X | |
| **Hand controls** | | X | X | X | |

# Disposal of batteries

Details regarding safe disposal of used and leaking batteries:
Batteries should be disposed in accordance with appropriate federal, state and local regulations. LINAK recommends that used or leaking batteries are disposed through local recycling system. Please do not throw used or leaking batteries in normal household waste or in nature. This will cause damage to the environment.

**How to deal with leaking batteries**
Leaking batteries should be disposed as described above.
If leaking batteries are discovered in the product, the batteries must be removed at once to minimise damage to the product. If leaking batteries are left in the product, it become defective.

It is recommended to use plastic gloves when handling leaking batteries. The contents of a leaking batteries can cause chemical burns and respiratory irritation.

If exposed to the contents of a leaking battery, please wash with soap and water. If irritation persists, please seek medical attention. In case of eye contact, please flush eyes thoroughly with water for 15 minutes and seek medical attention.

# Labels

Label for LA10

Label for BLE2DC

Label for BP12

Label for SMPS001

Label for SMPS002

Label for SMPS006

Label for HC05 Wireless

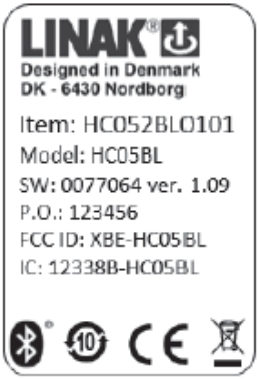


Label for HC10 Wireless

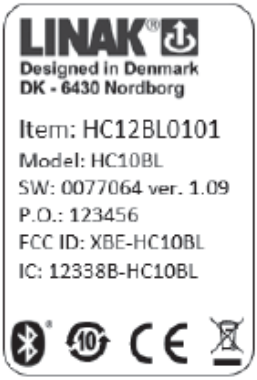


Label for HB10 Wireless

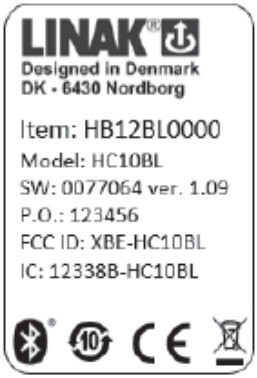


# FCC warning

NOTE: This equipment has been tested and found to comply with the limits for a Class B digital device, pursuant to part 15 of the FCC Rules. These limits are designed to provide reasonable protection against harmful interference in a residential installation. This equipment generates uses and can radiate radio frequency energy and, if not installed and used in accordance with the instructions, may cause harmful interference to radio communications. However, there is no guarantee that interference will not occur in a particular installation. If this equipment does cause harmful interference to radio or television reception, which can be determined by turning the equipment off and on, the user is encouraged to try to correct the interference by one or more of the following measures:

- Reorient or relocate the receiving antenna.

- Increase the separation between the equipment and receiver.

-Connect the equipment into an outlet on a circuit different from that to which the receiver is connected.

-Consult the dealer or an experienced radio/TV technician for help

Changes or modifications not expressly approved by the party responsible for compliance could void the user's authority to operate the equipment.

This device complies with Part 15 of the FCC Rules. Operation is subject to the following two conditions:

(1) this device may not cause harmful interference, and (2) this device must accept any interference received, including interference that may cause undesired operation.

# IC warning

This device contains licence-exempt transmitter(s)/receiver(s) that comply with Innovation, Science and Economic Development Canada's licence-exempt RSS(s). Operation is subject to the following two conditions:
(1) This device may not cause interference.
(2) This device must accept any interference, including interference that may cause undesired operation of the device.

L'émetteur/récepteur exempt de licence contenu dans le présent appareil est conforme aux CNR d'Innovation, Sciences et Développement économique Canada applicables aux appareils radio exempts de licence. L'exploitation est autorisée aux deux conditions suivantes :

(1) L' appareil ne doit pas produire de brouillage;
(2) L' appareil doit accepter tout brouillage radioélectrique subi, même si le brouillage est susceptible d' en compromettre le fonctionnement.

## Drawing appendix

LA10

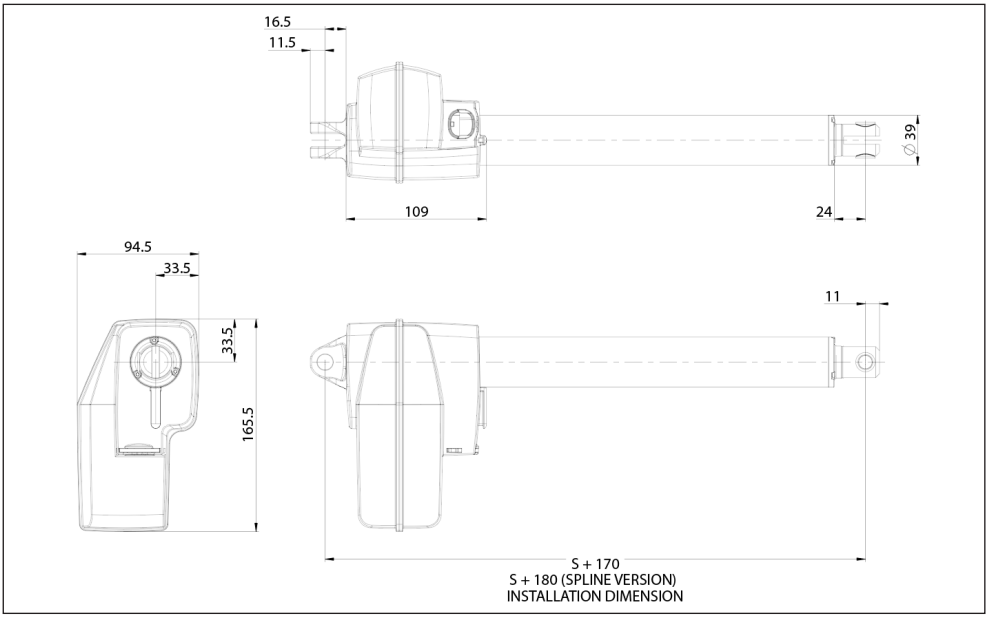

SMPS001

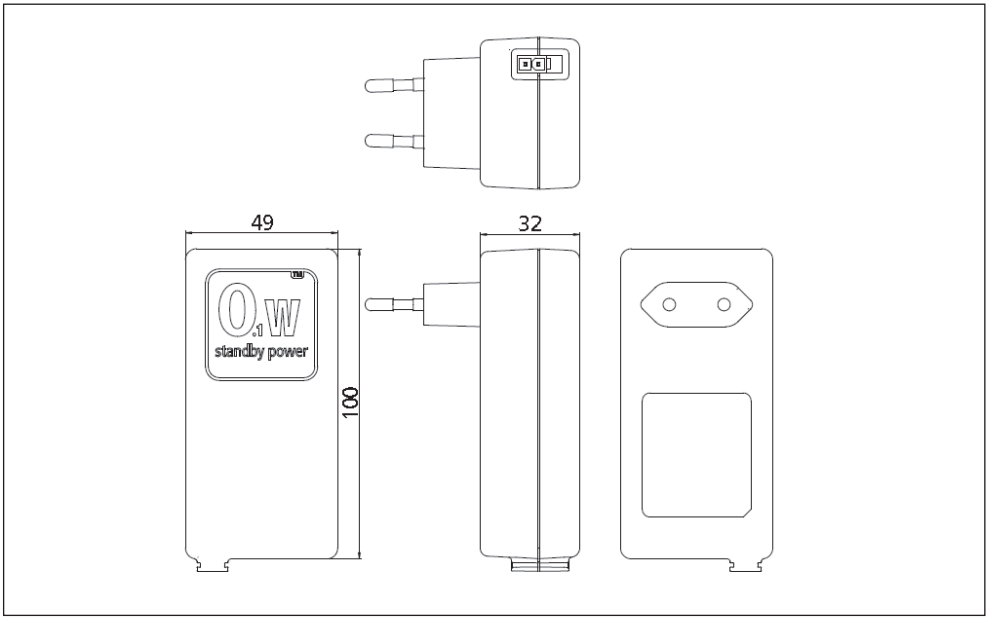


SMPS002

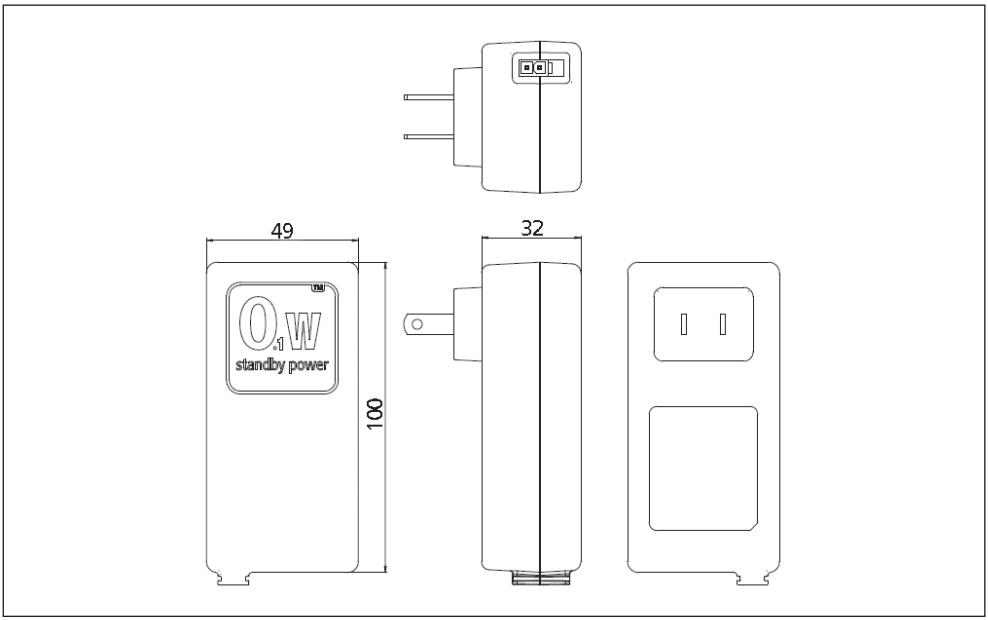

SMPS006

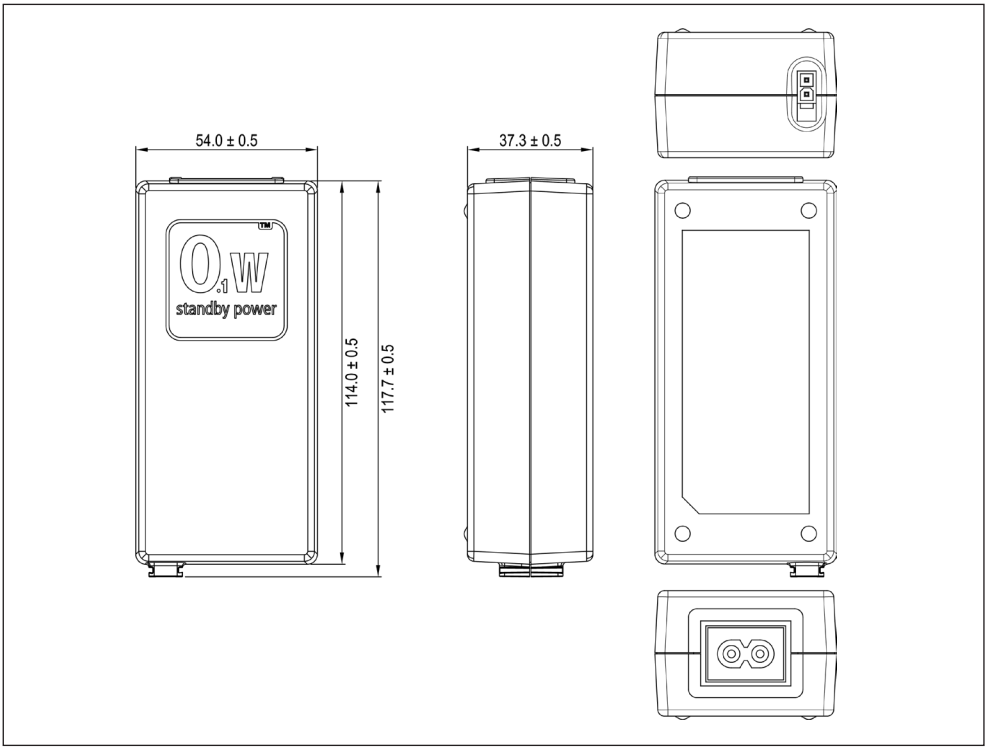


BP12

HC05 Wireless

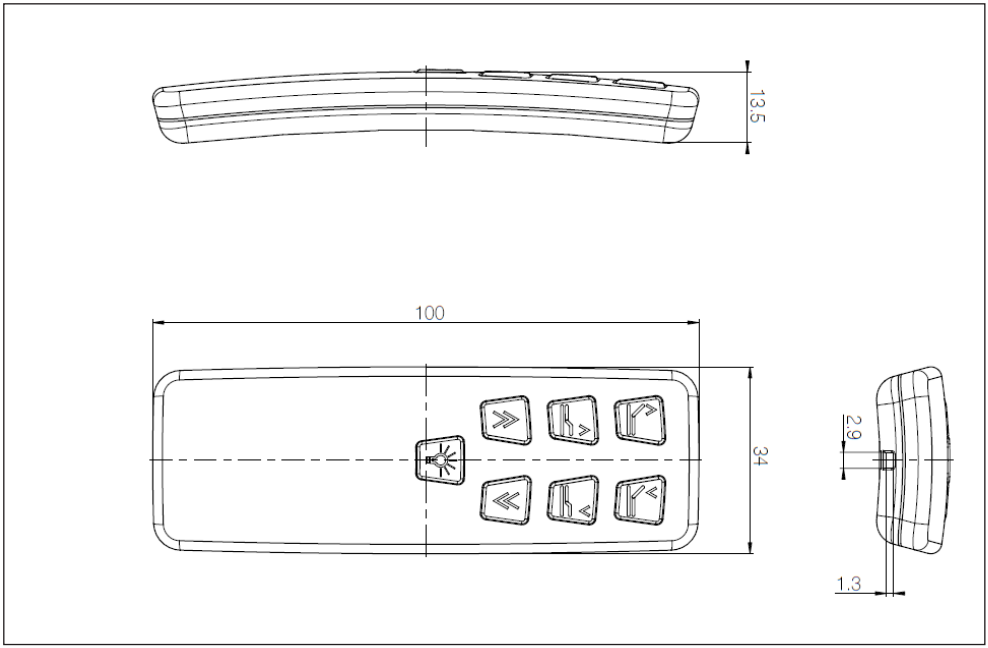


HC10 Wireless

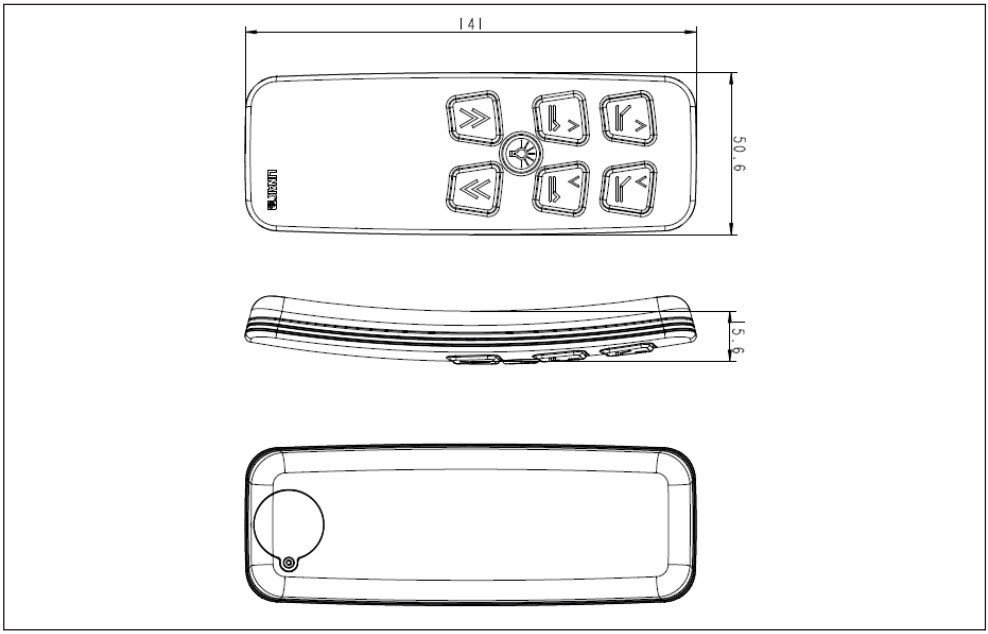

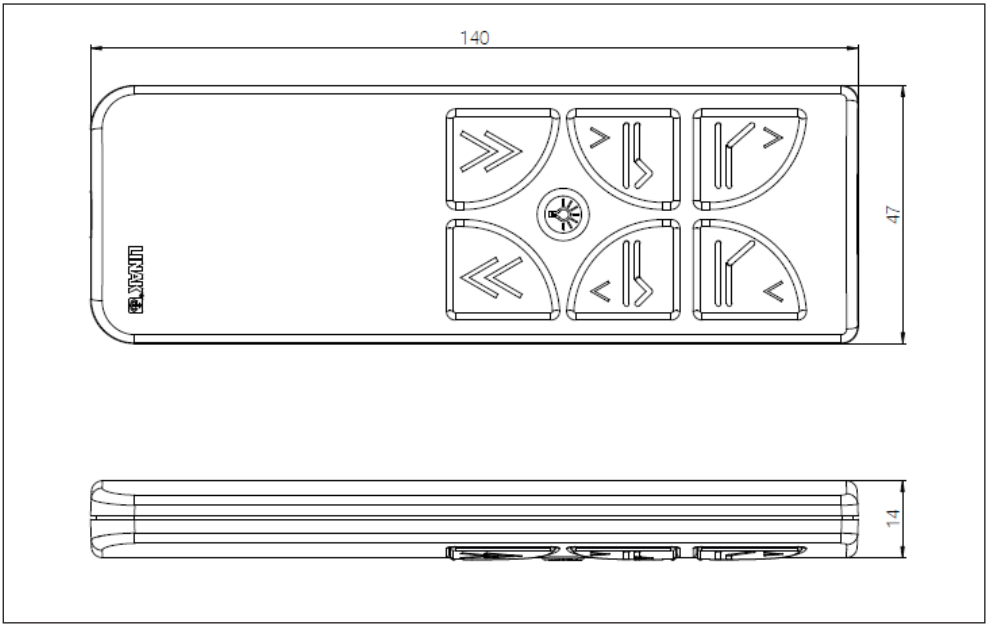


**LINAK APPLICATION POLICY**

The purpose of the application policy is to define areas of responsibilities in relation to applying a LINAK product defined as hardware, software, technical advice, etc. related to an existing or new customer application.

LINAK products as defined above are applicable for a wide range of applications within the Medical, Furniture, Desk and Industry areas. Yet, LINAK cannot know all the conditions under which LINAK products will be installed, used, and operated, as each individual application is unique.

The suitability and functionality of the LINAK product and its performance under varying conditions (application, vibration, load, humidity, temperature, frequency, etc.) can only be verified by testing, and shall ultimately be the responsibility of the LINAK customer using any LINAK product.

LINAK shall be responsible solely that the LINAK products comply with the specifications set out by LINAK and it shall be the responsibility of the LINAK customer to ensure that the specific LINAK product can be used for the application in question.

# Addresses

## FACTORIES

### China
LINAK (Shenzhen) Actuator Systems, Ltd.
Phone: +86 755 8610 6656
Phone: +86 755 8610 6990
E-mail: sales@linak.cn
www.linak.cn

### Denmark - Headquarters
**LINAK A/S - Group Headquarters**
Phone: +45 73 15 15 15
Fax: +45 74 45 80 48
Fax (Sales): +45 73 15 16 13
E-mail: info@linak.com
www.linak.com

### USA
**LINAK U.S. Inc.**
North and South American Headquarters
Phone: +1 502 253 5595
Fax: +1 502 253 5596
E-mail: info@linak-us.com
www.linak-us.com
ww.linak-latinamerica.com

## SUBSIDIARIES

### Australia
LINAK Australia Pty. Ltd
Phone: +61 3 8796 9777
Fax: +61 3 8796 9778
E-mail: sales@linak.com.au
www.linak.com.au

### Austria
LINAK Repräsentanz - Österreich (Wien)
Phone: +43 (1) 890 7446
Fax: +43 (1) 890 744615
E-mail: info@linak.de
www.linak.at - www.linak.hu

### Belgium
LINAK Actuator-Systems NV/SA
(Belgium & Luxembourg)
Phone: +32 (0)9 230 01 09
E-mail: beinfo@linak.be
www.linak.be - www.fr.linak.be

### Brazil
LINAK Do Brasil Comércio De Atuadores Ltda.
Phone: +55 (11) 2832 – 7070
Fax: +55 (11) 2832 – 7060
E-mail: info@linak.com.br
www.linak.com.br

### Canada
LINAK Canada Inc.
Phone: +1 502 253 5595
Fax: +1 416-255-7720
E-mail: info@linak.ca
www.linak-us.com

### Czech Republic
LINAK C&S S.R.O.
Phone: +420581741814
Fax: +420581702452
E-mail: info@linak.cz
www.linak.cz

### Denmark - International
LINAK International
Phone: +45 73 15 15 15
E-mail: info@linak.com
www.linak.com

### Denmark - Sales
LINAK DANMARK A/S
Phone: +45 86 80 36 11
Fax: +45 86 82 90 51
E-mail: linak@linak-silkeborg.dk
www.linak.dk

### Finland
LINAK OY
Phone: +358 10 841 8700
E-mail: linak@linak.fi
www.linak.fi

### France
LINAK FRANCE E.U.R.L
Phone: +33 (0) 2 41 36 34 34
Fax: +33 (0) 2 41 36 35 00
E-mail: linak@linak.fr
www.linak.fr

### Germany
LINAK GmbH
Phone: +49 6043 9655 0
Fax: +49 6043 9655 60
E-mail: info@linak.de
www.linak.de

### India
LINAK A/S India Liaison Office
Phone: +91 120 4531797
Fax: +91 120 4786428
E-mail: info@linak.in
www.linak.in

### Ireland
LINAK UK Limited (Ireland)
Phone: +44 (0)121 544 2211
Fax: +44 (0)121 544 2552
+44 (0)796 855 1606 (UK Mobile)
+35 387 634 6554 (Republic Of Ireland Mobile)
E-mail: sales@linak.co.uk
www.linak.ie

### Italy
LINAK ITALIA S.r.l.
Phone: +39 02 48 46 33 66
Fax: +39 02 48 46 82 52
E-mail: info@linak.it
www.linak.it

### Japan
LINAK K.K.
Phone: 81-45-533-0802
Fax: 81-45-533-0803
E-mail: linak@linak.jp
www.linak.jp

### Malaysia
LINAK Actuators Sdn. Bhd.
Phone: +60 4 210 6500
Fax: +60 4 226 8901
E-mail: info@linak-asia.com
www.linak.my - www.linak.co.id
www.linak.pk - www.linak.ph

### Netherlands
LINAK Actuator-Systems B.V.
Phone: +31 76 5 42 44 40
Fax (Sales): +31 76 2 00 11 10
E-mail: info@linak.nl
www.linak.nl

### New Zealand
LINAK New Zealand Ltd
Phone: +64 9580 2071
Fax: +64 9580 2072
E-mail: nzsales@linak.com.au
www.linak.com.au

### Norway
LINAK Norge AS
Phone: +47 32 82 90 90
E-mail: info@linak.no
www.linak.no

### Poland
LINAK Polska
LINAK Danmark A/S (Spólka Akcyjna)
Phone: +48 22 295 09 70 /
+48 22 295 09 71
E-mail: info@linak.pl
www.linak.pl

### Republic of Korea
LINAK Korea Ltd.
Phone: +82 2 6231 1515
Fax: +82 2 6231 1516
E-mail: info@linak.kr
www.linak.kr

### Russia
LINAK LLC
Phone: +7 495 780 31 61
Fax: +7 495 687 14 26
E-mail: info@linak.ru
www.linak.ru

### Spain
LINAK Actuadores, S.L.u
Phone: +34 93 588 27 77
Fax: +34 93 588 27 85
E-mail: esma@linak.es
www.linak.es

### Sweden
LINAK Scandinavia AB
Phone: +46 8 732 20 00
Fax: +46 8 732 20 50
E-mail: info@linak.se
www.linak.se

### Switzerland
LINAK AG
Phone: +41 43 388 31 88
Fax: +41 43 388 31 87
E-mail: info@linak.ch
www.linak.ch - www.fr.linak.ch
www.it.linak.ch

### Taiwan
LINAK (Shenzhen) Actuator systems Ltd.
Taiwan Representative office
Phone: +886 2 27290068
Fax: +886 2 27290096
E-mail: sales@linak.com.tw
www.linak.tw

### Turkey
LINAK İth. İhr. San. ve Tic. A.Ş.
Phone: + 90 312 4726338
Fax: + 90 312 4726635
E-mail: info@linak.com.tr
www.linak.com.tr

### United Kingdom
LINAK UK Limited
Phone: +44 (0)121 544 2211
Fax: +44 (0)121 544 2552
E-mail: sales@linak.co.uk
www.linak.co.uk

## DISTRIBUTORS

### Argentina
NOVOTEC ARGENTINA SRL
Phone: 011-4303-8989 / 8900
Fax: 011-4032-0184
E-mail: info@novotecargentina.com
www.novotecargentina.com

### Colombia
MEM Ltda
Phone: +[57] (1) 334-7666
Fax: +[57] (1) 282-1684
E-mail: servicioalcliente@memltda.com.co
www.mem.net.co

### India
Mechatronics Control Equipments India Pvt Ltd
Phone: +91-44-28558484, 85
E-mail: bala@mechatronicscontrol.com
www.mechatronicscontrol.com

### Indonesia
PT. HIMALAYA EVEREST JAYA
Phone: +6 221 544 8956, +6 221 544 8965
Fax: +6 221 619 1925
Fax (Sales): +6 221 619 4658
E-mail: hejplastic-div@centrin.net.id
www.hej.co.id

### Israel
NetivTech LTD
Phone: +972 55-2266-535
Fax: +972 2-9900-560
Email: info@NetivTech.com
www.netivtech.com

### Russia
OOO FAM
Phone: +7 812 3319333
Fax: +7 812 3271454
E-mail: purchase@fam-drive.ru
www.fam-drive.ru

### Singapore
Servo Dynamics Pte Ltd
Phone: +65 6844 0288
Fax: +65 6844 0070
E-mail: servodynamics@servo.com.sg

### South Africa
Industrial Specialised Applications CC
Phone: +27 011 466 0346
E-mail: gartht@isagroup.co.za
www.isaza.co.za

### United Arab Emirates
Mechatronics
Phone: +971 4 267 4311
Fax: +971 4 267 4312
E-mail: mechtron@emirates.net.ae

LINAK A/S reserve the right to make technical alterations

Copyright © LINAK 2020.05 MA-M9-02-832

**Terms of use**
The user is responsible for determining the suitability of LINAK products for specific application. LINAK takes great care in providing accurate and up-to-date information on its products.
However, due to continuous development in order to improve its products, LINAK products are subject to frequent modifications and changes without prior notice. Therefore, LINAK cannot guarantee the correct and actual status of said information on its products.
While LINAK uses its best efforts to fulfil orders, LINAK cannot, for the same reasons as mentioned above, guarantee the availability of any particular product. Therefore, LINAK reserves the right to discontinue the sale of any product displayed on its website or listed in its catalogues or other written material drawn up by LINAK.
All sales are subject to the Standard Terms of Sale and Delivery for LINAK. For a copy hereof, please contact LINAK.

LINAK®
WE IMPROVE YOUR LIFE