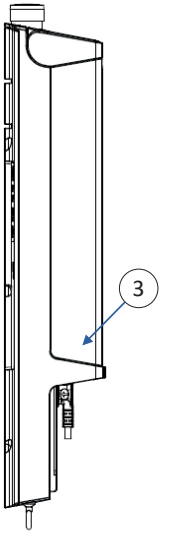

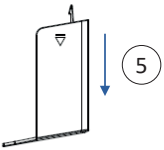

To open cable cover:

- below battery (3)
- insert flat head screwdriver in groove.
  Twist carefully and release cable lid lock (4)
- pull cable cover downwards and release from grooves (5)

Cable routing and management:

Cable management is possible on the control box backside. The wire grooves can be used for many different purposes, for instance:

1. Guide cable for sling adjustment actuator upwards
2. Guide hand control cable up and out in low or high position to right or left side of patient lift

Cable hanger:
CAL40 comes with a cable hanger for parking mains cable or hand control when not in use.
The cable hanger can be located on either the left or right side of the control box.
Place hanger in designated grooves on the back before mounting the control box on the patient lift. When mounted, the hanger is locked in place.

LED indicators

Battery indication CAL40+			
LED 1 - LED 2 - LED 3	**LED state**	**Capacity**	**Buzzer**
	LED 1-3 constantly on	Full	-
	LED 1-2 constantly on		
	LED 1 constantly on	Low	Single beep on key activation
	LED 1, left side, switches from green to yellow and flashes slowly	Two cycles left	Buzzing continually when voltage has dropped below threshold limit

Charging indication CAL40+	LED state
LED 1 - LED 2 - LED 3	
	Charging with internal charger
	Fully charged /ready for use
	On mains without battery mounted
	Turn off mains
	For use with external charger CH01, please see CH01 usage details

LED indicators

System status CAL40+	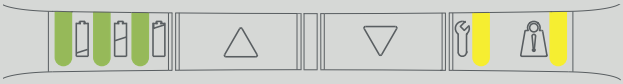					
PRIORITY	**LED4 + LED5**	**LED state (Not listed = off)**	**States in normal use**	**Comments**	**Reset**	**Buzzer**
0		LED 4 flashing according to BLE pairing state	Pairing BLE	Not ready to operate	Wait until ready	Buzzer in accordance with BLE pairing state
1		LED 4 + 5 constantly on (only when key is pressed)	Emergency stop activated	Not ready to operate	Release emergen-cy stop button	-
2		LED 4 + 5 flashing fast (synchronous)	FATAL ERROR Cannot operate, has to be reset	No movement possible	Reset fatal error routine	Buzzer on key press
3		LED 5 flashing fast	SWL active			
4		LED 5 flashing	SWL confirmation			Buzzer in accordance with learn function
5		LED 5 flashing slowly	Overload on CH1	Overload state kept for 10 sec. Momentary not ready to lift.	Reduce load	Beeps twice
6		LED 4 flashing slowly	Duty cycle guard	Momentary not ready to lift	Wait until ready	-
7		LED 4 constantly on	Service needed	Operation is possible	SDT, App, HB	-

LED indicators

Battery indication CAL40	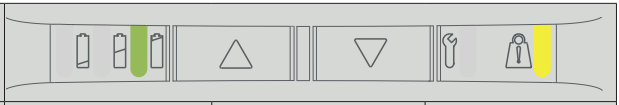		
LED 3	**States in normal use**	**LED state (not listed = off)**	**Buzzer state (not listed = off)**
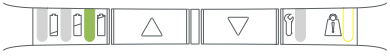	High	LED constantly on	
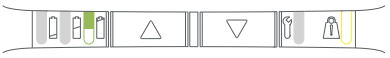	Low (needs charging)	LED slowly flashing	Single beep at start of key activation
	Two cycles left	LED slowly flashing/ synchronous/toggling + buzzer active	Constant

Charging indication CAL40	**LED state**
LED 3 + 5	
	Charging with internal charger
	Fully charged /ready for use
	On mains without battery mounted
	Turn off mains
	For use with external charger CH01, please see CH01 usage details

LED indicators

System status CAL40		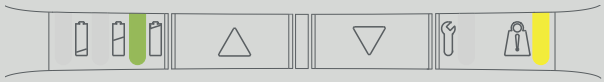				
PRIORITY	**LED 3 + 5**	**LED state (not listed = off)**	**States in normal use**	**Comments**	**Reset**	**Buzzer**
0		LED 5 constantly on (only when key is pressed)	Emergency stop activated	Not ready to operate	Release emergency button	
1		LED 3+5 slowly flashing (asynchronous/toggling)	SWL confirmation	New current limit stored. Ready to operate		Single beep
2		LED slowly flashing	Overload	Momentarily not ready to lift	Reduce load	Beeps twice
3		LED constantly on	Duty cycle guard	Momentarily not ready to lift	Wait until ready	No buzzer

How to use the SWL adjustment function

With LIFT40 it is possible to configure software for the use of the standard or advanced SWL function or even both if needed. When preparing the control box software, it is possible to make preparations for the use of a standard SWL hand control or the use of a customised hand control.

	Safe Working Load
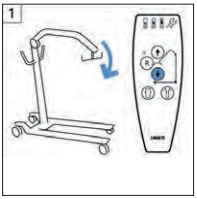	Drive the lifting arm down and connect the special SWL adjustment hand control.
	Add load to the lift corresponding to SWL for the lift type.
	Press the 'R' and 'UP' buttons simultaneously and move the lifting arm up. If using the standard SWL adjustment, then it is possible to use the standard SWL adjustment function without moving the actuator a full stroke, but it must be ensured that the lifting is carried out in the area where the lift has the biggest load.
	When the actuator stops running, the largest current value is registered and stored in the control box SW. When the current cutoff value is stored, the control box will provide an audio signal and a flashing LED, depending on the SW configuration.

Recommendations

- Using the Safe Working Load (SWL) adjustment functionality allows easy current limit setting to help the lift comply with the ISO 10535 requirement.
- The SWL adjustment functionality is recommended to use for channel 1 when adjusting the lifting actuator to fit the SWL load rating of the lift.
- Based on settings from using the SWL adjustment function, the lift shall not be able to lift more than 1.5 times the maximum load.
  However, the current limit setting will not stop the actuator at the exact same load as used for the SWL adjustment.
  This is due to the fact that an actuator uses less current when its components have been run in.
- SWL adjustment: When the current limit has been registered, the control box will allow the actuator to draw the registered current plus an addition of 10%.
  This ensures that the lift can lift the set load, however it cannot lift more than 1.5 times of the set load.
- When making new current limit settings, be aware to use a defined set of actuator and control box.
  To ensure that a new current limit setting is stored in the control box, either the SWL adjustment function must be active for at least 2 seconds or the actuator has to run minimum 20 mm. The actuator current consumption must be at least 2 A for minimum 2 seconds during the use of the SWL adjustment function.
- Always use fully charged batteries (as a minimum more than 50% battery capacity) for SWL adjustment procedures.
- CAL40+: A maximum cutoff value of 12 Amp can be registered (stored).
- The ambient temperature must be approx. 20 °C.
- The difference between the highest and lowest load should exceed 10% if using the standard SWL adjustment function.
- To activate the SWL adjustment function, use the special SWL adjustment hand control.
- If an actuator or a control box is replaced, it is necessary to reset the maximum load to ensure the correct cutoff value for the new system.
- The preset current cutoff value of a specific lift can be reset by means of the SWL adjustment function, however, this may not be in accordance with EN10535 if done with different loads than the rated load of the lift.

Pairing BLE hand control

When pairing a wireless hand control, follow this instruction:

Move within two meters of the patient lift.

Enter Direct Pairing Mode by activating key 1 and magnet for 3 seconds.

Release key and magnet and move closer to the LIFT40 until buzzer frequency change from slow to fast.

Confirm pairing by pushing key 1

How to

pair a LINAK® Wireless LIFT40

Double confirmation beep - Pairing OK

LIFT40 mounting

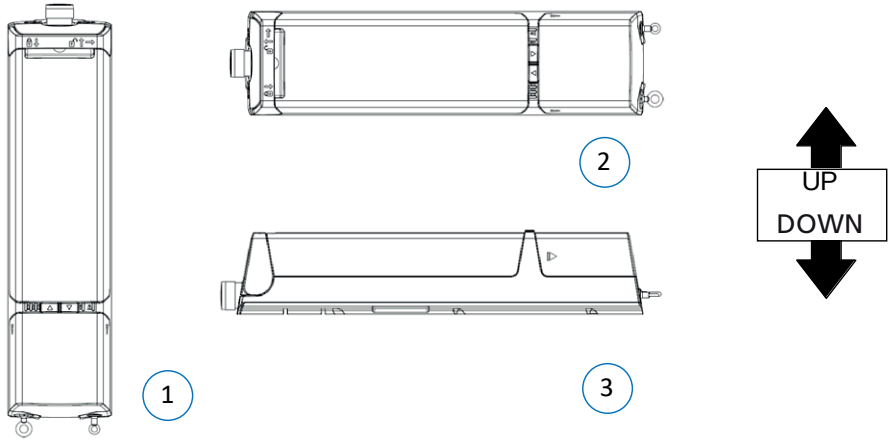

Recommendations - positioning

LIFT40 only complies with IPX6 when the control box is mounted correctly (see illustration 1 and 2).

LIFT40 can be mounted as shown on the pictures above:

- Battery upwards, cable outlets downwards (see illustration 1)
- Control box lying on the right side, seen from the front (see illustration 2)
- Control box placed flat on the back (see illustration 3)

Cables and blind plugs must be inserted correctly in the control box to maintain the IP degree in washing or cleaning situations.

Mounting information:
LIFT40 is mounted by means of minimum 2 screws (not supplied by LINAK).
Screw type: ISO7380-1 / M5 and L = 20 mm or 25 mm
Washer type:
ISO7089 / M5, d1 = 5.3 mm / d2 = 10 mm / s = 1mm

The LIFT40 control box must be mounted with minimum two of the three screws possible.
The mounting screws for the control box and the charger must be tightened with a maximum torque of 1 Nm.
When mounting CAL40 or CAL40+ on a patient lift, please use at least two of the three dedicated mounting holes in the charger body.

Front view

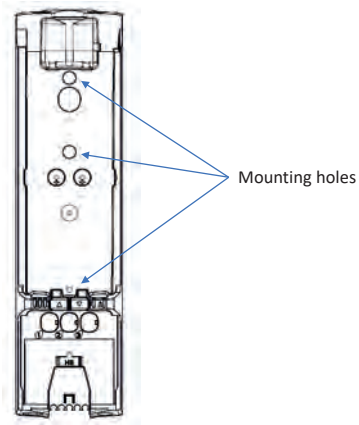

Recommendations:

- The control buttons of redundant hand controls for lifting and lowering work as normal hand control buttons.
- Please be aware that loss of power might occur due to the battery deep discharge protection.
  This will only be the case if the battery is continually being used despite a warning.
- The service counter is only active in CAL40+ when a sufficiently charged BAL40 is mounted.
- When using a control box with emergency stop, the stop button must be activated in cleaning situations in order to comply with IPX6.
  The battery pack BAL40 must not be removed in cleaning situations, doing so could result in non-compliance with IPX6.
- If LIFT40 is fitted with a mains power connector, the protection plug must always be inserted to ensure the IP protection, if the port is not used.
- Only use original LINAK mains cables to ensure a proper connection to the internal charger.
- When charging, LIFT40 will not be able to operate any actuators.
- The LIFT40 DC plug is intended for charging of the BAL40 battery.
  Using the DC plug for powering external equipment can lead to battery drainage or discharge.
- Only use correct LINAK charger (CHL40, CH01 or integrated charger in LIFT40).

Warning

- Never connect the programming box directly to the hand control port.
- To avoid injury, the battery should not be mounted in transport situations. Use LINAK original packaging to store battery during transportation.
- Use blind plug when cleaning/washing down to maintain the IP degree.
- In order to avoid injury, the emergency stop should be activated in all transport and cleaning situations.

The BAL40 lead acid battery pack is part of the LIFT40 product series specially developed for patient lifts.

Usage:

- Compatibility: CAL40/CAL40+/CHL40
- Duty cycle: Max. 10% or 2 minutes continuous use followed by 18 minutes without use at a max. discharge current of 10 A
- Charging: Via external wall charger CHL40 and CH01 or via CAL40 or CAL40+ with internal charger.
- Recharging during storage: First battery recharge must be no later than 6 months after the production date stated on the label. Hereafter, the battery must be recharged at least every 6 months.
- Operating temperature: +5 °C to +40 °C
- Charging temperature: +5 °C to +40 °C
  Charging at high ambient temperatures can impact the charging time.
- Storage temperature: -15 °C to +40 °C (+10 °C to +25 °C - recommended)
  The batteries must be stored in an applicable storage room without direct sunlight.
- Relative humidity: 20% - 80% – non-condensing
- Atmospheric pressure 700 to 1060 hPa
- Meters above sea level: Max. 3000 meters
- Approvals: IEC 60601-1
  ANSI/AAMI ES60601-1
  CSA CAN/CSA-C22.2 NO. 60601-1
  IEC 60601-2

General functionality – LIFT40

Taking off battery:

1) Lift handle upwards to release lock
2) Grab handle, pull out and slightly to the right
3) Lift off the battery - carry in handle

Mounting battery:

1) With open handle (1) - position battery base over the guide track and lower it in place
2) Steer in upper part of battery
3) Press down handle to lock battery in place

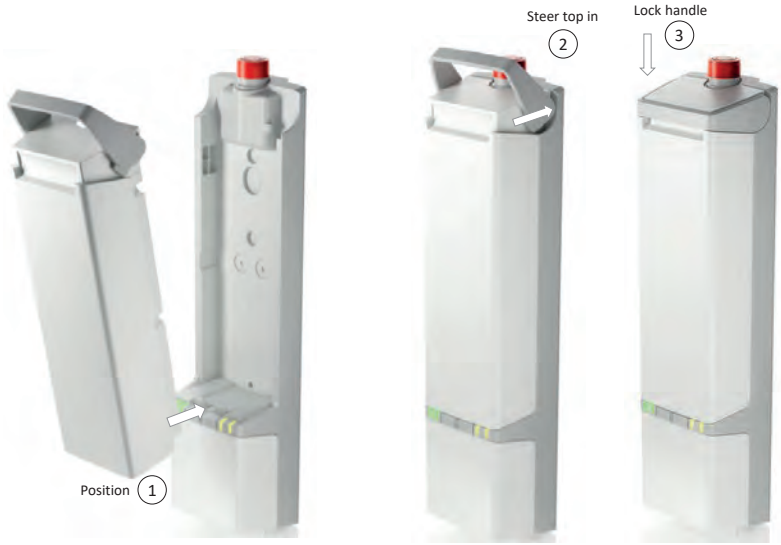

Recommendations:

- Do not exceed the storage temperature as it will shorten the product life and performance.
- Allow the battery to settle to room temperature before use or charging.
- Only use correct LINAK charger (CHL40 or integrated charger in the CAL40 or CAL40+ control box).
- Do not exceed the duty cycle as it will shorten the product life, reduce performance and eventually activate excess temperature protection.
- BAL40 is intended for use in indoor applications, however not in indoor pool environments.
- If the battery is completely discharged, then recharge the battery before storage.
- Always use correct LINAK charger.).

Warning

DO NOT:
- heat, burn or short-circuit the batteries
- expose the batteries to high impact
- drop, crush or puncture the batteries
- use batteries with signs of damage or corrosion
- charge or store the batteries near combustible material
- charge the batteries without supervision
- overcharge or fully discharge the batteries
- exceed IP ratings

Any of the above mentioned can cause fire or injury.

Check at regular intervals that the ventilation hole is undamaged and intact.
The construction of the ventilation hole permits battery gasses to get out,
but it does not permit penetration of water.

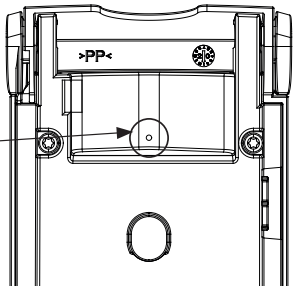

The CHL40 charger is an important part of the LIFT40 family. It functions as a wall charger when mounted on the wall, but also as a more mobile charger simply placed horizontally on its back on any surface.

Usage:

- Usage temperature: +5 °C to 40 °C
- Storage temperature: -10 °C to 50 °C
- Relative humidity: 20% to 80% - non-condensing
- Atmospheric pressure: 700 to 1060 hPa
- Height above sea level: Max. 3000 meters
- Nominal current draw: Max. 500 mA (CH01 spec)
- Power consumption (standby): Max. 2.5 W
- Power consumption (charging): Max. 19 W
- Approvals: (pending) IEC 60601-1
  ANSI/AAMI ES60601-1
  CAN/CSA-22.2 No. 60601-1
  Australian deviation, Canadian deviation

LED functionality

The charger indicates whether it is connected to mains (green LED) or whether the battery is being charged (orange LED).

Charger mounting/position

The LIFT40 charger CHL40 can be placed for use in two different ways. It is designed for mounting flat on the wall by using minimum 2 of 3 screws in the Ø4 mm holes in the charger body. Screw types and wall plugs may vary depending on wall material.
The charger can also be placed flat on a table or desk. The dedicated rubber studs on the charger back ensure that the charger stays safely at the same position during charging (see drawings).

Front View

Mounting holes

When mounting CHL40 on wall, please use minimum two of the 3 dedicated mounting holes placed in body of charger.

When placing CHL40 on table of shelf, 4 rubber studs on the back adds stability and friction to the charger / battery combination.

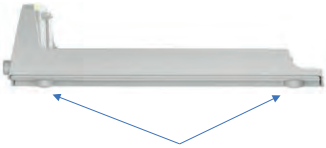

Studs for table placement

Back View

Studs for table placement

Mounting information

CHL40 is mounted by means of minimum 2 screws (not supplied by LINAK).
Screw type: The screw type depends on the wall type and has to be defined by the service technician.
Washer type: ISO7089 / M5, d1 = 5.3 mm / d2 = 10 mm / s = 1mm.
The CHL40 charger must be mounted with minimum two of the three screws possible.
The mounting screws for the control box and the charger must be tightened with a maximum torque of 1 Nm.

To be able to comply with the IPX4 rating, the CHL40 must hang on the wall.

The charger must be disconnected from mains in cleaning situations.

Recommendations:

- Only use original LINAK components and accessories for full compatibility.
- Only use CHL40 charger for BAL40 battery charging.
- The charger CHL40 is specifically designed to charge the BAL40 battery.
- Special care should be taken when mounting the CHL40.
- If the CHL40 is mounted correctly, the CHL40 complies to IPX4.
- If the CHL40 is mounted incorrectly, water may enter the screw holes resulting in IPX4 non-compliance and cause malfunction and hazardous situations.
- In cleaning situations, the charger must be disconnected from mains.

4. COL50 (MEDLINE® CARELINE®)

The control box COL50 is a part of the LIFT50 product series specially developed for patient lifts.

LIFT50 is a complete system consisting of the control box COL50, a battery BAL50 and an external charger CHL50 in a flexible solution. Combined with one or more actuators and a hand control, you have a complete system for modern patient lifts.

Usage:

- With internal charger: Nominal current draw max. 350 mA (depending on input voltage)

  Power consumption (standby) max. 0.5 W power (depending on input voltage)

  Input voltage range: 120-240 VAC (50/60 Hz)

  Power consumption (charging) max. 30 W (depending on input voltage)
- Duty cycle: Max. 10% or 2 min. continuous use followed by 18 min. without use
- Operating temperature: +5 °C to +40 °C
- Storage temperature: -10 °C to +50 °C
- Relative humidity: 20% to 80% - non-condensing
- Atmospheric pressure: 700 to 1060 hPa
- Meters above sea level: Max. 3000 meters
- Approvals (pending): EN IEC 60601-1
  ANSI/AAMI ES60601-1
  CAN/CSA-C22.2 NO. 60601-1
  EN IEC 60601-1-2
  RED (EU)
  FCC ID (US)
  IC ID (Canada)
  Telec (Japan)
  Bluetooth® qualification

Instructions for use

- Default functionality – when charging, the COL50 will not be able to operate any actuators.
- It is not possible to use other battery types than BAL50 with the COL50.
- Use only original LINAK mains cables to ensure proper connection to internal charger.

General functionality – LIFT50

Battery on/off:
LIFT50 has a new and ergonomic battery design.

Remove battery:
1) Use thumb and index/middle finger to push buttons on battery sides
2) Pull battery out

Mounting battery:
3) and 4) Grab battery on sides and steer battery base over steering pin, push in place

Please follow the mounting instructions of the control box COL50.
Do not mount the battery upside down.

Emergency stop instructions

Emergency stop activation/deactivation:
The emergency stop is mounted on top of the BAL50 battery. It is readily available as the norm describes.

Operation to activate emergency stop
1) Push button on top of battery

To release emergency stop
Take off battery
2) Use thumb and index/middle finger to push buttons on battery sides
3) Pull battery out

To replace the battery again
4) Grab battery on sides and steer battery base over steering pin.
5) Push in place

This will release the emergency stop.

Cable mounting and cable cover
COL50 has a uniquely designed cable cover which also works as an integrated cable cover when closed.

To close cable cover
1) Mount cable plugs in control box (1)
2) Push cable cover directly over designated snaps (2)

To open cable cover
3) Insert flat head screwdriver in groove (3). Move screwdriver handle carefully towards the back of COL50. Cable lid is released
4) Pull cable cover straight out (4)

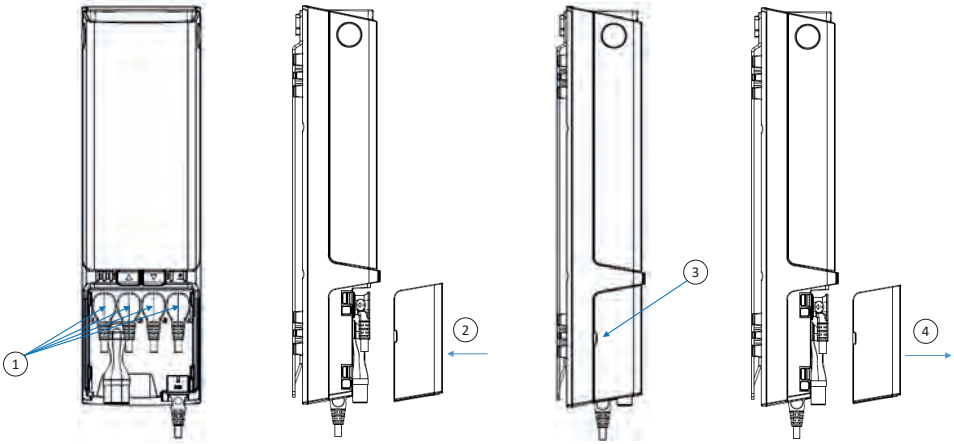

Cable routing and management
Cable management is possible on the COL50 backside. The wire grooves can be used for many different purposes, for instance:

1) Guide cable for sling adjustment actuator upwards
2) Guide hand control cable up and out in low or high position to right or left side of patient lift

LED indicators

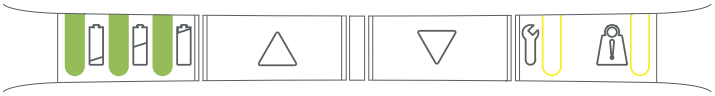

LED 1 - LED 2 - LED 3	LED state (Not listed = off)	States in normal use
	LED 1 - 3 constantly on	75 - 100% SOC
	LED 1 + 2 constantly on	50 - 75% SOC
	LED 1 constantly on	< 50% SOC
	LED 1 left side, switches from green to yellow and flashes slowly	Two cycles left, buzzer active

LED indicators

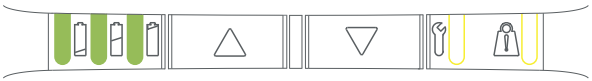

LED 1 - LED 2 - LED 3	LED state (Not listed = off)	States while charging
	LED 1 - 3 constantly on	90 - 100%
	LED 1 + 2 constantly on LED 3 flashes slowly	65 - 90%
	LED 1 constantly on LED 2 flashes slowly	40 - 65%
	LED 1 flashes slowly	0 - 40%
	LED 1 + 2 + 3 flash slowly	Charging stopped due to low battery temperature, high battery temperature or other error conditions
	No light in LEDs	Charging stopped due to lost communication to battery

LED indicators

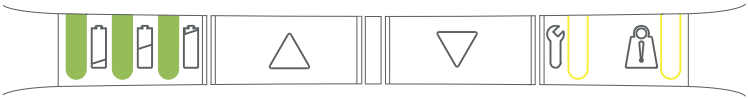

PRIORITY	LED 4 + LED 5	LED state (Not listed = off)	States in normal use	Comments	Reset
0		LED 4 flashing according to BLE pairing state*	Pairing BLE	Not ready to drive	Wait until ready
1		LED 4+5 constantly on	Emergency stop activated	Not ready to drive	Reactivate emergency stop
2		LED 4+5 flashing fast (synchronous)	FATAL ERROR Cannot drive, has to be reset	No movement possible	Reset fatal error routine
3		LED 4+5 flashing slowly (asynchronous toggling)	Not learned/configured correctly	Not ready to drive	Learn device, configure correct
4		LED 5 flashing slowly	OVERLOAD on CH1	Momentary not ready to LIFT	Reduce load
5		LED 4 flashing slowly	Duty cycle guard	Momentary not ready to LIFT	Wait until ready
6		LED 5 constantly on	Position not to be trusted	Drive is possible	Drive into EOS
7		LED 4 constantly on	Service needed	Drive is possible	SDT, App, HB.

How to use Direct Pairing

1. Enter pairing mode.
2. When in pairing mode, the control box buzzer will begin to beep and the LED starts to blink.
3. Move the hand control closer to the control box with which you want to pair.
4. Pair the hand control with the control box.
5. The control unit LED will begin to blink with the same frequency as the nearest control box.

Move within two meters of the patient lift.

Enter Direct Pairing Mode by activating key 1 and magnet in 3 seconds.

Release key and magnet and move closer to the LIFT50 until buzzer frequency change from slow to fast.

Confirm pairing by pushing key 1

How to
pair a LINAK® Wireless LIFT50

How to use the learn mode function

With the COL50 it is possible to configure software for the use of standard or advanced learn mode function or even both if needed. When preparing the control box software, it is possible to make preparations for the use of standard learn mode hand control or the use of customised hand control.

	Standard Learn Mode	Advanced Learn Mode
Basic condition	To ensure that a new current limit setting is stored in the control box, the learn mode function must be active for at least 2 seconds and the actuator current consumption must be at least 2 Amp during the use of the learn mode function.	To ensure that a new current limit setting is stored correctly in the control box, the physical actuator stroke length shall fit the specified stroke length in the SW.
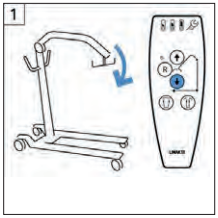	Drive the lifting arm down and connect the special learn mode hand control.	Drive the lifting arm down and connect the special learn mode hand control.
	Add load to the lift corresponding to SWL for the lift type.	Add load to the lift corresponding to SWL for the lift type.
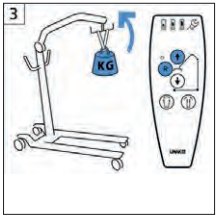	Press the 'R' and 'UP' buttons simultaneously and move the lifting arm up. If using the standard learn mode, then it is possible to use the standard learn mode function without moving the actuator a full stroke, but it must be ensured that the lifting is carried out in the area where the lift has the biggest load.	Press the 'R' and 'UP' buttons simultaneously and move the lifting arm up. For use of advanced learn mode, it is required and important to run a full stroke while registering the new current limit settings. This will cover different load requirements over the stroke length.
	When the actuator stops running, the largest current value is registered and stored in the control box SW. When the current cut-off value is stored, the control box will provide an audio signal and flashing LED, depending on the SW configuration.	When the actuator stops running, a data set of new current limits has been registered and stored in the control box SW. The data set contains pairs of values for current consumption in different stroke length sections. When the current cut-off data set is stored, the control box will provide an audio signal and flashing LED depending on the SW configuration.

Learn Mode - recommendations

- Using the Learn Mode functionality allows easy current limit setting to help the lift comply with the ISO 10535 requirement.
- The Learn Mode functionality is recommended to use for channel 1 when adjusting the lifting actuator to fit the SWL load rating of the lift.
- Based on settings from the Learn Mode function use, the lift shall not be able to lift more than 1.5 times the maximum load.
  However, the current limit setting will not stop the actuator at the exact same load as used for the Learn Mode function.
  This is due to the fact that an actuator uses less current when its components have been run in.
- When making new current limit settings, be aware to use a defined set of actuator and control box.
- For Learn Mode, the following conditions must be fulfilled:
  When using Standard Learn Mode, the actuator current consumption must be at least 2 Amp and the function must either be active for at least 2 seconds or the actuator must run at least 20 mm.
  When using Advanced Learn Mode, the actuator stroke length must be specified in the software.
  Run the actuator to full stroke length to set new current limits.
- Always use fully charged batteries (as a minimum more than 50% battery capacity) for Learn Mode procedures.
- A maximum cut-off value of 12 Amp can be registered (stored).
- The ambient temperature must be approx. 20 °C.
- The difference between the highest and lowest load should exceed 10% if using the standard Learn Mode function.
- To activate the learn mode function, use the special Learn Mode hand control.
- If an actuator or control box is exchanged, it is necessary to reset the maximum load to ensure the correct cut-off value for the new system.
- The preset current cut-off value of a specific lift can be reset by means of the Learn Mode function, however, this may not be in accordance with EN10535 if done with different loads than the rated load of the lift.
- There is a risk of false position due to the use of manual lovering/quick release and this may therefore impact the use of advanced learn mode.

LIFT50 mounting

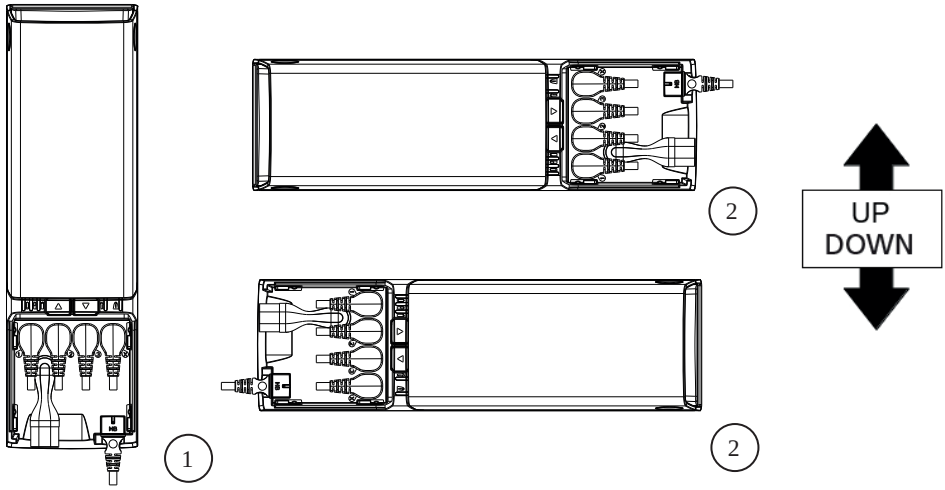

Drawing no. 1039w4000

Recommendations - positioning

LIFT50 only comply with IPX6 when the control box is mounted correctly
(see illustration 1 and 2).

LIFT50 can be mounted as shown on the pictures above:
- Battery upwards, cable outlets downwards (see illustration 1)
- Control box lying on either side, seen from the front (see illustrations 2)

Cables and blind plugs must be inserted correctly in the control box to maintain the IP degree in washing or cleaning situations.

Mounting information:
LIFT50 is mounted by means of 2 screws (not supplied by LINAK).
Screw type: ISO7380-1 / M5 and L = 20 mm or 25 mm
Washer type: ISO7089 / M5, d1 = 5.3 mm / d2 = 10 mm / s = 1mm

The LIFT50 control box must be mounted with two screws (se drawing).
The mounting screws for the control box and the charger must be tightened with a maximum torque of 1 Nm.

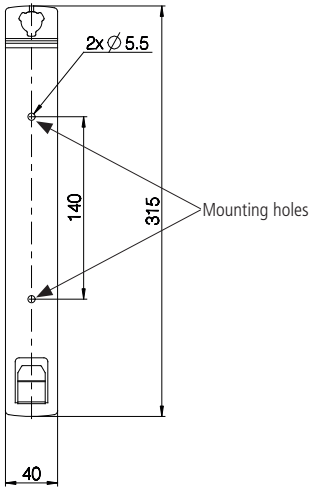

Recommendations - mounting

If COL50 is mounted incorrectly, water will gather in the plug holes resulting in possible non-compliance with IPX6.

COL50 can be mounted as shown on the pictures below:
1) Batteries up, cable outlets downwards
2) COL50 lying on the side, no difference if mains cable is up or down

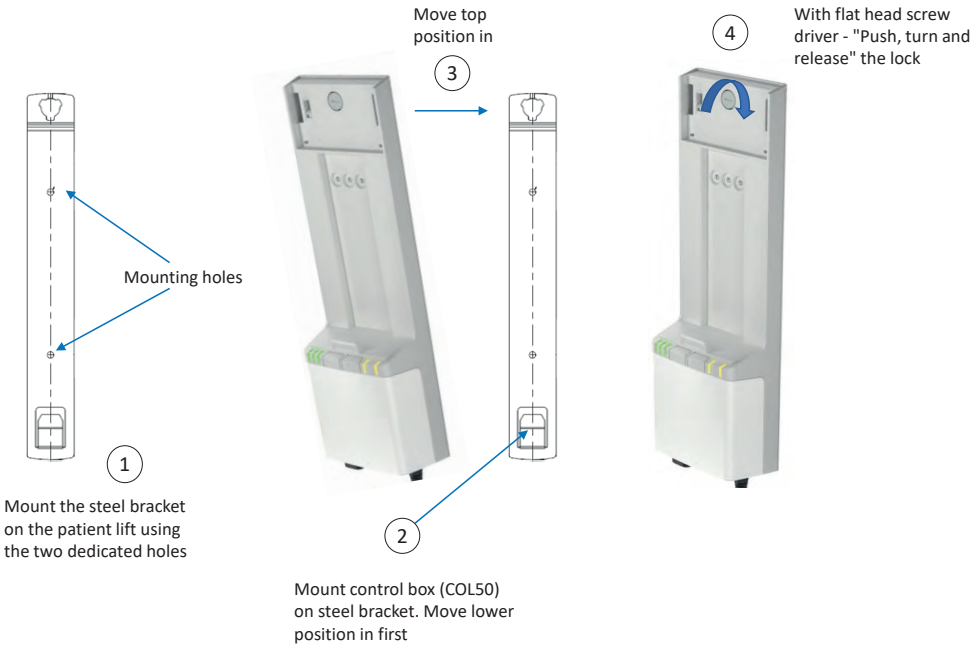

Cable hanger:
COL50 comes with a cable hanger for parking mains cable or hand control when not in use.

The cable hanger can be located on either the left or right side of the control box.

Place hanger in designated grooves on the back before mounting the control box on the steel bracket on the patient lift.

When mounted, the hanger is locked in place.

Recommendations:

- The control buttons of redundant hand controls for lifting and lowering work as normal hand control buttons.
- The service counter is only active in COL50 when a sufficiently charged BAL50 is mounted.
- When using a control box with emergency stop, the stop button must be activated in cleaning situations in order to comply with IPX6.
- Only use original LINAK mains cables to ensure a proper connection to the internal charger.
- When charging, LIFT50 will not be able to operate any actuators.
- Only use correct LINAK charger (CHL50 or integrated charger in LIFT50).
- To avoid cables from being damaged by pulling, LINAK recommends to make safe cabling.
- Push mains cable fully into correct sockets and make sure that the plugs are completely inserted.

Motor cable

Always use 6-wire cables. Please note that angled motor cable plugs are required for connection to the control box.

Hot Plugging

Removing or adding any OpenBus cables is not allowed when the control box is on power via mains supply or battery!
If necessary anyway, follow the below procedure:

1. Remove mains or battery and wait 5 sec.
2. Mount or dismount the required cables

If this procedure is NOT followed, it may result in a damaged OpenBus driver circuit.
The risk of a damaged circuit increases if the accessory has a high start current (in rush current).

Warnings

- Always check correct assembly after mounting and service to ensure that the cable lock is mounted.
  (Connectors are usually removed during cleaning)
- Always use approved chemicals with the housing as the plastic may show corrosion caused by some chemicals.
  As a result water may accumulate/gather in housing.
- Take special precautions concerning 3rd party interfacing. Please contact LINAK for further information.
- Make a review of all product specifications before system set-up if the current cut-off limit is higher
  than the maximum allowed current cut-off for the actuator.
- To avoid cable interruption and actuator defects make a proper cable installation and inspect regularly for wear and damage.
  Defective parts must be replaced.
- After service inspection, the application must be tested for correct functionality before it is put into operation to avoid
  actuator plugs being mixed during service.
  Operators must not be inside entrapment area.
- To avoid electrical failure or system disturbance inspect regularly for wear and damage. Defective parts must be replaced.
- Make a proper cable installation to avoid short-circuit cables for handset/controls.
  Regular inspection must be made for wear and damage. Defective parts must be replaced.
- To avoid injury, the battery should not be mounted in (all) transport situations.
  Use LINAK original packaging to store battery during transportation.
- Wireless: A hand control can run an application that is out of sight.

The BAL50 Li-Ion battery pack is a part of the LIFT50 product series specially developed for patient lifts.

LIFT50 is a complete system consisting of the control box COL50, a battery BAL50 and an external charger CHL50 in a flexible solution.

Usage:

• Compatibility:	COL50 and CHL50
• Duty cycle:	Max. 10% (or 2 min. continuous use followed by 18 min. without use) at max. discharge current (10 A)
• Charging:	Via external wall charger CHL50 or via COL50 with integrated charger
• Charging state:	Maximum 30% when shipped from LINAK
• Recharging during storage:	First recharge of the battery must be no later than 12 months after production date stated on the label. Hereafter the battery must be recharged at least every 12 months.
• Operating temperature:	+5 °C to +40 °C
• Charging temperature:	+5 °C to +40 °C Charging at elevated temperatures can impact the charging time
• Charging time:	Approx. 5 h
• Storage temperature:	+10 °C to +40 °C (+10 °C to +25 °C recommended) The batteries must be stored in an applicable storage room without direct sunlight.
• Relative humidity:	20% - 80% – non-condensing
• Atmospheric pressure:	700 to 1060 hPa
• Meters above sea level:	Max. 3000 meters
• Approvals (pending):	IEC 60601-1 ANSI/AAMI ES60601-1 CSA CAN/CSA-C22.2 NO. 60601-1 IEC 60601-2 IEC62133-2

Mounting

Mounting of the BAL50 battery will follow the placement of the COL50 and CHL50.

See user manual for further information in the respective product sections.

Deep discharge protection

The BAL50 has a deep discharge protection to extend the battery life. The deep discharge protection is activated when the battery is discharged.

If the battery is completely discharged, the charging will be started at a very small rate to protect the battery. Depending on the battery state, it may take several hours to get to the normal charging state.

For long-term storage, remove the battery from the application and store separately.

Transportation

The lithium ion batteries must be packed and transported according to applicable regulations. Always ask your local transportation provider how to handle the transportation of lithium ion batteries.

Recommendations:

- Charge the battery fully before first use.
- Adhere to the battery storage temperature or else the product life and performance will be reduced.
- Allow the battery to settle to room temperature before use or charging.
- Only use correct LINAK® charger (CHL50 or integrated charger in COL50).
- Do not exceed the duty cycle as it will shorten the product life and reduce performance.
- BAL50 is intended for use in indoor applications, however not in indoor pool environments.
- Recharge the battery before storage if it has been completely discharged.

Warnings

ALL LI-ION BATTERY USERS MUST READ THESE IMPORTANT BATTERY SAFETY INSTRUCTIONS AND WARNINGS BEFORE USING LI-ION BATTERIES.
Failure to read and follow these safety instructions and warnings may result in fire, personal injury, and equipment damage if the batteries are charged and/or used improperly.

Lithium ion batteries differ from the lead acid technology as they have a built-in deep discharge protection.

- In case of continuous use despite warnings, a power loss might occur due to the battery deep discharge protection. In this event, there may be no warning and the application may not be able to move when expected.
- If product caution is not clearly visible at low light intensity, read the product label instructions symbol. A warning must be included in the application manufacturer's manual for the medical device.
- The application manufacturer must test the application and ensure that intentional and unintended operations do not exceed the battery specification limits. The risk analysis for the final application must allow for the ensurance of alternative means to make movement, for instance quick release or manual lowering.
- Do not open, disassemble or modify the battery housing as cell or circuitry damage may develop excessive heat.
- Discontinue the battery use immediately if the battery emits an unusual smell, feels hot, changes colour or shape, shows signs of damage or corrosion or appears abnormal in any other way.
- In case the battery turns hot, disconnect and remove the battery from the room. If not possible to remove the battery, then evacuate the room.
- Defective or damaged lithium ion batteries or batteries that produce excessive heat or fire are not allowed for transportation.
- For safety reasons, please adhere to the indicated charging, storage, and operation temperature as extreme temperatures (low or high) might ignite the batteries and cause fire.
- The mounting instructions must be followed in order to avoid exposing batteries to water.
- The customer is responsible for determining that charger and host device work properly.
- Recharge batteries every 12 months at a minimum.
- Dispose of batteries in accordance with local regulations.

DO NOT:
- heat, burn or short circuit the batteries
- expose the batteries to high impact
- crush or puncture the batteries
- charge or store the batteries near combustible material
- charge the batteries without supervision
- expose the batteries to water or other liquids
- use the batteries in pool areas

Any of the above mentioned can cause fire or injury.

LINAK® will remedy defective Li-Ion batteries built into LINAK products in accordance with the terms stipulated in the LINAK Li-Ion battery disclaimer available on the LINAK website. LINAK explicitly disclaims all other remedies and liability.

The CHL50 charger is an important part of the LIFT50 family. It functions as a wall charger when mounted on the wall, but also as a more mobile charger simply placed horizontally on its back on any surface.

Usage:

- Usage temperature: +5 °C to 40 °C
- Storage temperature: -10 °C to 50 °C
- Relative humidity: 20% to 80% - non-condensing
- Atmospheric pressure: 700 to 1060 hPa
- Height above sea level: Max. 3000 meters
- Nominal current draw: Max. 350 mA
- Power consumption (standby): < 0.5 W
- Power consumption (charging): Max. 25 W
- Approvals: (pending) IEC 60601-1
  ANSI/AAMI ES60601-1
  CAN/CSA-22.2 No. 60601-1
  IEC 60601-1-2
  PSE

LED indicators

LED 1 - LED 2 - LED 3	LED state (Not listed = off)	States while charging
	LED 1 - 3 constantly on	With battery or if no battery mounted on charger: 90 - 100%
	LED 1 + 2 constantly on LED 3 flashes slowly	65 - 90%
	LED 1 constantly on LED 2 flashes slowly	40 - 65%
	LED 1 flashes slowly	0 - 40%
	LED 1 + 2 + 3 flash slowly	Charging stopped due to low battery temperature, high battery temperature or other error conditions
	No light in LEDs	Charging stopped due to lost communication to battery

Charger mounting

When mounting CHL50 on wall, please use the two dedicated mounting holes placed in the charger body.

Front View

CHL50 must be mounted by means of 2 screws (not supplied by LINAK):

Screw type:	Diameter 4 mm/style: pan head or truss head. Length and thread type depend on wall material.
Washer type:	Optional 4 mm washer with max. 10 mm outer diameter.

The mounting screws for the control box and the charger must be tightened with a maximum torque of 1 Nm.

When placing CHL50 on table or shelf, 4 rubber studs on the back add stability and friction to the charger/battery combination.

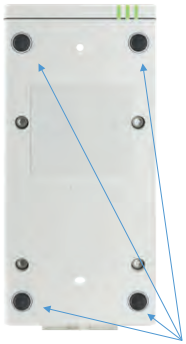

Side View

Recommendations - mounting

As long as the charger is mounted correctly, then the CHL50 complies to IPX4.
If the CHL50 is mounted incorrectly, then water will gather in the plug holes resulting in possible non-compliance with IPX4.

CHL50 can be mounted as shown on the pictures:

1) Batteries up, cable outlets downwards
2) CHL50 lying on the back, no difference if mains cable is up or down
3) IPX4 only if hanging upright

Hanging on wall - Vertical

Hanging on wall - Horizontal

Laying flat on any surface

Recommendations:

- The charger CHL50 is specifically designed to charge the BAL50 type battery.
- Special care should be taken when mounting the CHL50.
- If the CHL50 is mounted correctly, the CHL50 complies to IPX4.
- If the CHL50 is mounted incorrectly, then water may enter the screw holes resulting in IPX4 non-compliance and cause malfunction and hazardous situations.
- In cleaning situations, the charger must be disconnected from mains.

Warnings

- Make a proper cable installation to avoid short-circuit of cables. Regular inspection must be made for wear and damage. Defective parts must be replaced.
- Ensure that mains cable plug is fully inserted into mains socket.

10. Repair and disposal

Repair

Only an authorised LINAK® service centre should repair the LINAK actuator systems. Systems to be repaired under warranty must be sent to an authorised LINAK service centre.

In order to avoid the risk of malfunction, all actuator repairs must only be carried out by an authorised LINAK Service shop or repairers, as special tools and parts must be used.

If a system is opened by unauthorised personel there is a risk that it may malfunction at a later date.

Disposal of LINAK systems or components

LINAK systems or components may be disposed of, possibly by dividing them into different waste groups for recycling or combustion.

We recommend that our product is disassembled as much as possible at the disposal and that you try to recycle it. LINAK systems or components should be disposed of in accordance with the environmental regulations applicable in the respective country.

FACTORIES

China
LINAK (Shenzhen) Actuator Systems, Ltd.
Phone: +86 755 8610 6656
Phone: +86 755 8610 6990
www.linak.cn

Denmark - Headquarters
LINAK A/S
Phone: +45 73 15 15 15
Fax: +45 74 45 80 48
Fax (Sales): +45 73 15 16 13
www.linak.com

Slovakia
LINAK Slovakia s.r.o.
Phone: +421 51 7563 444
www.linak.sk

Thailand
LINAK APAC Ltd.
Phone: +66 33 265 400
www.linak.com

USA
LINAK U.S. Inc.
Americas Headquarters
Phone: +1 502 253 5595
Fax: +1 502 253 5596
www.linak-us.com
www.linak-latinamerica.com

SUBSIDIARIES

Australia
LINAK Australia Pty. Ltd
Phone: +61 3 8796 9777
Fax: +61 3 8796 9778
www.linak.com.au

Austria
LINAK Repräsentanz - Österreich (Wien)
Phone: +43 (1) 890 7446
Fax: +43 (1) 890 744615
www.linak.at - www.linak.hu

Belgium
LINAK Actuator-Systems NV/SA
(Belgium & Luxembourg)
Phone: +32 (0)9 230 01 09
www.linak.be - www.fr.linak.be

Brazil
LINAK Do Brasil Comércio De Atuadores Ltda.
Phone: +55 (11) 2832 7070
Fax: +55 (11) 2832 7060
www.linak.com.br

Canada
LINAK Canada Inc.
Phone: +1 502 253 5595
Fax: +1 416 255 7720
www.linak-us.com

Czech Republic
LINAK C&S s.r.o.
Phone: +42 058 174 1814
Fax: +42 058 170 2452
www.linak.cz - www.linak.sk

Denmark - International
LINAK International
Phone: +45 73 15 15 15
www.linak.com

Denmark - Sales
LINAK DANMARK A/S
Phone: +45 86 80 36 11
Fax: +45 86 82 90 51
www.linak.dk

Finland
LINAK OY
Phone: +358 10 841 8700
www.linak.fi

France
LINAK FRANCE E.U.R.L
Phone: +33 (0) 2 41 36 34 34
Fax: +33 (0) 2 41 36 35 00
www.linak.fr

Germany
LINAK GmbH
Phone: +49 6043 9655 0
Fax: +49 6043 9655 60
www.linak.de

India
LINAK A/S India Liaison Office
Phone: +91 120 4531797
Fax: +91 120 4786428
www.linak.in

Ireland
LINAK UK Limited (Ireland)
Phone: +44 (0)121 544 2211
Fax: +44 (0)121 544 2552
+44 (0)796 855 1606 (UK Mobile)
+35 387 634 6554
(Republic of Ireland Mobile)
www.linak.co.uk

Italy
LINAK ITALIA S.r.l.
Phone: +39 02 48 46 33 66
Fax: +39 02 48 46 82 52
www.linak.it

Japan
LINAK K.K.
Phone: 81-45-533-0802
Fax: 81-45-533-0803
www.linak.jp

Malaysia
LINAK Actuators Sdn. Bhd.
Phone: +60 4 210 6500
Fax: +60 4 226 8901
www.linak.my

Netherlands
LINAK Actuator-Systems B.V.
Phone: +31 76 5 42 44 40
www.linak.nl

New Zealand
LINAK New Zealand Ltd
Phone: +64 9580 2071
Fax: +64 9580 2072
www.linak.com.au

Norway
LINAK Norge AS
Phone: +47 32 82 90 90
www.linak.no

Poland
LINAK Polska
LINAK Danmark A/S (Spólka Akcyjna)
Phone: +48 22 295 09 70 /
+48 22 295 09 71
www.linak.pl

Republic of Korea
LINAK Korea Ltd.
Phone: +82 2 6231 1515
Fax: +82 2 6231 1516
www.linak.kr

Russia
LINAK LLC
Phone: +7 495 780 3161
Fax: +7 495 687 1426
www.linak.ru

Spain
LINAK Actuadores, S.L.u
Phone: +34 93 588 27 77
Fax: +34 93 588 27 85
www.linak.es

Sweden
LINAK Scandinavia AB
Phone: +46 8 732 20 00
Fax: +46 8 732 20 50
www.linak.se

Switzerland
LINAK AG
Phone: +41 43 388 31 88
Fax: +41 43 388 31 87
www.linak.ch - www.fr.linak.ch
www.it.linak.ch

Taiwan
LINAK (Shenzhen) Actuator systems Ltd.
Taiwan Representative office
Phone: +886 2 272 90068
Fax: +886 2 272 90096
www.linak.tw

Turkey
LINAK İth. İhr. San. ve Tic. A.Ş.
Phone: + 90 312 4726338
Fax: + 90 312 4726635
www.linak.com.tr

United Kingdom
LINAK UK Limited
Phone: +44 (0)121 544 2211
Fax: +44 (0)121 544 2552
www.linak.co.uk

DISTRIBUTORS

Argentina
NOVOTEC ARGENTINA SRL
Phone: 011-4303-8989/8900
Fax: 011-4032-0184
www.novotecargentina.com

Colombia
MEM Ltda
Phone: +[57] (1) 334-7666
Fax: +[57] (1) 282-1684
www.mem.net.co

India
Mechatronics Control Equipments
India Pvt Ltd
Phone: +91-44-28558484, 85
www.mechatronicscontrol.com

Indonesia
PT. HIMALAYA EVEREST JAYA
Phone: +6 221 544 8956,
+6 221 544 8965
Fax: +6 221 619 1925
Fax (Sales): +6 221 619 4658
www.hej.co.id

Iraq
Scan Medical Tech
Phone: +964 770 470 2202

Israel
NetivTech LTD
Phone: +972 55-2266-535
Fax: +972 2-9900-560
www.netivtech.com

Kingdom of Bahrain
Mechatronics Industrial Equipments
Phone: +973 17280059
Fax: +973 17910045
www.mechatronicsbh.com

Qatar
Mechatronics Industrial Equipments
Phone: +974 44581155
Fax: +974 44689135
www.mechatronicsqatar.com

Russia
OOO FAM
Phone: +7 812 3319333
Fax: +7 812 3271454
www.fam-drive.ru

Singapore
Servo Dynamics Pte Ltd
Phone: +65 6844 0288
Fax (Sales): +65 6844 0070

South Africa
Industrial Specialised Applications CC
Phone: +27 011 466 0346
www.isaza.co.za

United Arab Emirates
Mechatronics Industrial Equipments LLC
Phone: +971 4 267 4311
Fax: +971 4 267 4312
www.mechatronics.ae

Copyright © LINAK 2021.04 MA-M9-02-196-BQ

LINAK® accepts no responsibility for possible errors or inaccuracies in catalogues, brochures, and other material. LINAK reserves the right to change its products without prior notice. LINAK cannot guarantee product availability and reserves the right to discontinue the sale of any product. The user is responsible for determining the suitability of LINAK products for a specific application. All sales are subject to the '*Standard Terms of Sale and Delivery*', available on LINAK websites.

LINAK and the LINAK logotype are registered trademarks of LINAK A/S. All rights reserved.

LINAK®
WE IMPROVE YOUR LIFE