S430 Connections	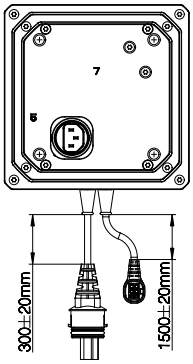	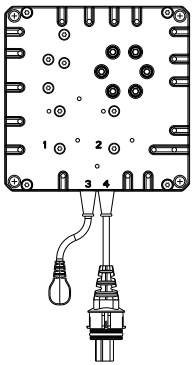 3: Motor supply 4: Mains through 1 Female connection top entry, male connection side entry	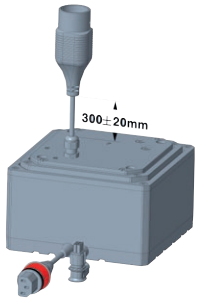
	6: Mains through 1 Female connection top entry, male connection side entry	⟷	
S440 Connections	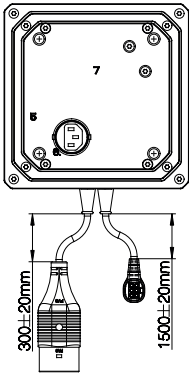	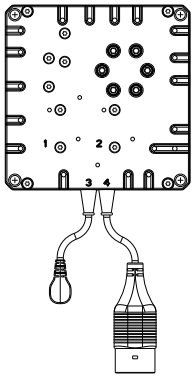 3: Motor supply 4: Mains through 2 Male connection top entry, female connection side entry	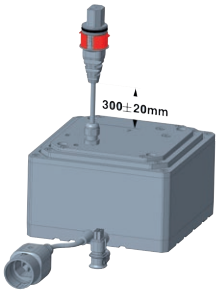
	6: Mains through 2 Male connection top entry, female connection side entry	⟷	
S530 Connections	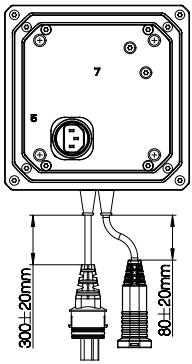	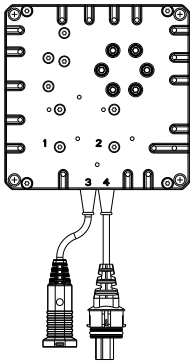 3: Motor supply 4: Mains through 1 Female connection top entry, male connection side entry	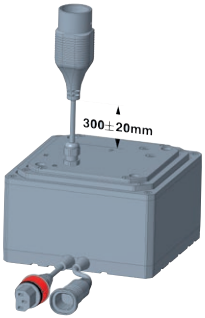
	6: Mains through 1 Female connection top entry, male connection side entry	⟷	

S540			
Connections	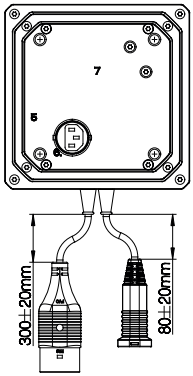 6: Mains through 2 Male connection top entry, female connection side entry	⟷	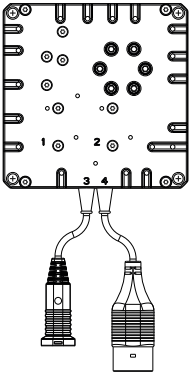 3: Motor supply 4: Mains through 2 Male connection top entry, female connection side entry	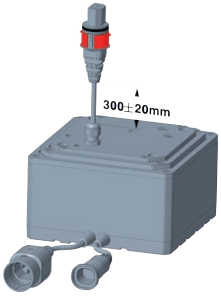

Mounting of a product on the side of an LC3

It is possible to mount a product on all 4 sides of the LC3 at the same time. However, it requires that the holes for mounting are placed with different distances from the top and/or bottom plate. Otherwise the mounting screws will collide.

Minimum distance from the top and bottom plate must be observed.

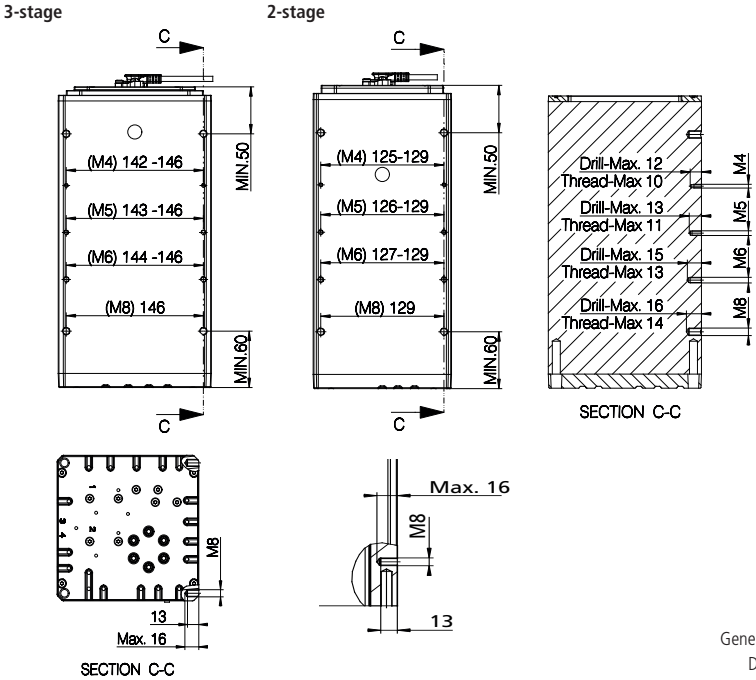

General tolerance +/- 0,5 mm
Drawing no.: 1002w9005

Screws used for mounting of a product on the side of the LC3 must be 8.8.

Screw type	M8	M6	M5	M4
Screw torque Nm	17	7	4	2

When mounting more than one LC3 you need to consider the fixation:

The reason why it is important only to fix one column, is that the columns will not move exactly in parallel – even if you have positioning such as hall.

If more than one column is fixed it can lead to dangerous situations.

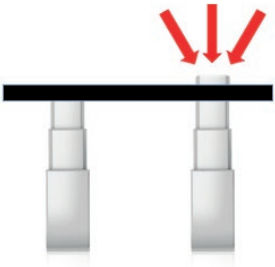

If you do have a trend/anti-trend function in your application, you need to mount one or more of the LC3's with a slider.

Having sliders prevents the column from bending as illustrated below.

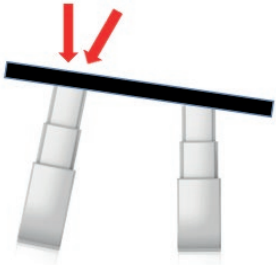

Feedback specifications: Potentiometer

Ordering code no.: 0P

Feedback specification	
VCC max.	15 V
Potentiometer total resistance	10 kΩ ± 20%
Non-linearity	±2%
Hysteresis	±2%

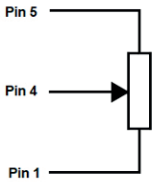

Calculation of output vs. SL/pitch

Notice: Only one gearing available for stroke length variants up to 700 mm

The output ratio of a potentiometer for a given position is defined as:

$$V_{out} = 5\% \times \text{Supply V} + \frac{\left(\frac{SL_{position}\ [mm]}{\text{Pitch}\ \left[\frac{mm}{rev}\right]}\right)}{62{,}83} \times \text{Supply V}$$

where $SL_{position}$ is the actual position in millimeters on the stroke length (SL), relative to end-stop inwards. In that position, the potentiometer output is 5% of full-scale. Spindle pitch is dependent on the variant, whose value can be found in the table below:

Variant	Pitch [mm/rev]
4000 N	20
5000 N	16
6000 N	12

Example, in a system connecting a 10 V supply to potentiometer with an SL position of 400 mm and 6000 N variant, the output voltage at the given position is:

$$V_{out} = 0{,}05 \cdot 10V + \frac{\left(\frac{400\ mm}{12\ \frac{mm}{rev}}\right)}{62{,}83} \cdot 10V \cong 5{,}81V$$

Input/output specifications: dual Hall positioning

Dual Hall digital (F3) with power switch

<table>
<tr><th>Item</th><th>Specification</th><th>Comment</th></tr>
<tr><td>Pin configuration</td><td><table><tr><td>Pin 1</td><td>GND</td></tr><tr><td>Pin 2</td><td>VCC</td></tr><tr><td>Pin 3</td><td>M+</td></tr><tr><td>Pin 4</td><td>HALL A</td></tr><tr><td>Pin 5</td><td>HALL B</td></tr><tr><td>Pin 6</td><td>M-</td></tr></table></td><td></td></tr>
<tr><td>VCC</td><td>4-15V</td><td></td></tr>
<tr><td>Current</td><td>Maximum 15 mA @10 kΩ and 1 nF load.

See diagram.</td><td> 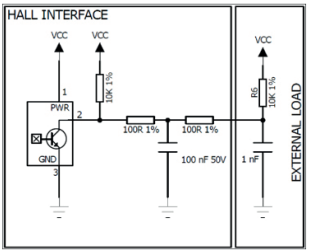
</td></tr>
<tr><td>HALL A/B</td><td>TState is minimum 5ms in all states (11,10,00,01) at a minimum mechanical load. Tested with the above specified load.

Duty cycle Hall A 30-70%
Duty cycle Hall B 30-70%

Low level <GND+0.5V @10 kΩ and 1nF load
High level >VCC-0.5V @10 kΩ and 1nF load</td><td>Signal pattern during movement:
 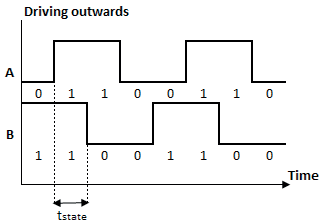

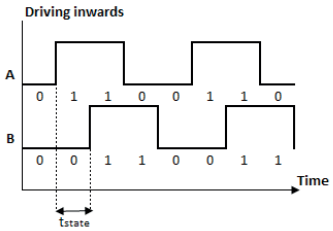
</td></tr>
<tr><td>Resolution</td><td>Number of dual Hall state shifts/spindle turn:
N ≅ 61.67 state/turn:.
4000 N: 0.324 mm per shift
5000 N: 0.260 mm per shift
6000 N: 0.195 mm per shift</td><td></td></tr>
</table>

Potentiometer

Potentiometer cables:
Columns with Potentiometer feedback option require specific actuator cables, both for termination through top-plate (option Txxx) and through side-entry (option Sxxx).

Table 1, connection to the motor and to the potentiometer and their colour.

E1 (power switch) F6 (potentiometer)		Colour Top plate connection	Colour Side-entry connection
1	Potentiometer 0V	Black	Black
2	Not connected	-	-
3	M+ (motor/power)	Brown	Blue
4	Potentiometer output	Yellow	Orange
5	Potentiometer VCC	Red	Red
6	M- (motor/power)	Blue	Brown

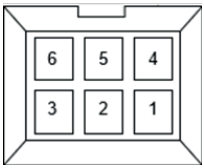

Connection through top-plate:
Columns with cable termination through top-plate (combination Txxx), require a special external cable, with part number 0965213. The cable is 1,5 m long, with open-end termination. The colours are described in the table above.

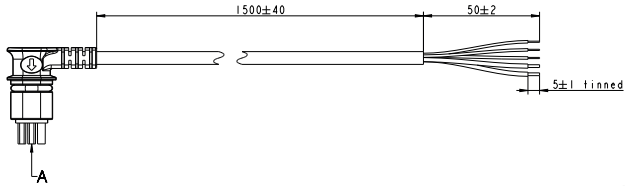

Drawing no. 0965213

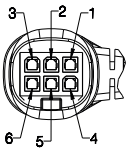

Connection through side-entry:
Cable termination is open-end. Please see the figure below.

Please see table 1 for the connection to the motor and to the potentiometer and their colour.

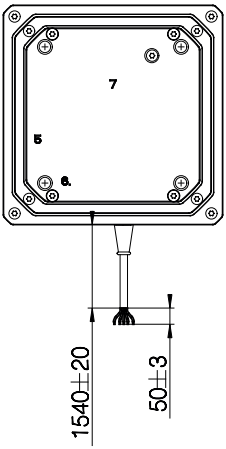

Recommendations:

- Please follow the important LC3 mounting guidelines.
- LC3 is for use in push or pull applications, cable outlet from smallest profile (top) or biggest profile (bottom). See top and bottom plate dimensions.
- When washing according to IPX6 parameters please notice that the large profile of the LC3 column must be placed upwards (bottom up).
- We recommend making a functional test of the application with all accessories connected before putting it into operation.
- Regular cleaning is recommended to reduce bacteria and increase the hygiene level
- Intended for indoor use only
- Not intended for use in harsh environments like e.g. pool environment, marine environment and agriculture buildings with ammonia vapors.

Warnings:

- Always check correct assembly after mounting and service to ensure that the cable locks are mounted.
- Ensure that the cable cannot be squeezed, pulled or subjected to any other stress or damages.
- LC3 is heavy (more than 10 kg). To avoid personal injury and product damage, DO NOT DROP!
- Take special precautions concerning 3rd party interfacing. Please contact LINAK for further information.
- Do not exceed the max. pull load specified on the label.
- Do not add dynamic load when changing between pull and push.
- Do not adjust anything during movement or while connected to mains, it can cause personal injury.
- To avoid cable interruption and actuator defects make a proper cable installation and inspect regularly for wear, damage and jarring sound. Defective parts must be replaced.
- After service inspection, the application must be tested for correct functionality before it is put into operation, to avoid misalignment between two columns moving in parallel.
- LINAK recommend using a safety nut in medical applications! LC3 has safety nut as standard.
- Do not loosen any screws on the LC3, this can cause collapse of the column!
- LINAK recommends making regular measurement of Class 1 protective ground conductivity in the application to avoid a disconnected grounding cable. If there are worn out or defect parts, the complete LC3 must be replaced.
- Interconnecting cables must remain plugged in during cleaning to prevent the ingress of water.
- Always retract the LC3 column fully to obtain IPX6 protection class.

5. Information on specific control boxes

Please be aware if the control box is not visible after mounting, all information regarding limitation of use shall be marked on the end product.

Output voltage
On control boxes connected to the mains the voltage of the actuator output is dependent on load, and the no-load voltage can reach 50 V.
Control boxes connected to a battery can reach a voltage of 30 V during charging and no load.

For all control boxes with battery
Prior to first use of LINAK batteries, please make sure that they are being charged 24 hours in order to reach proper function and prolong the lifetime of the batteries.

Warning
Please observe the following maintenance, replacement, and disposal requirements to ensure a safe and reliable operation.

Maintenance of batteries
The batteries are to be replaced after 4 years at the latest. Perhaps earlier, dependent on the pattern of use. Frequent and high-powered discharges reduce the battery life. For an optimum lifetime the product must be connected to the mains voltage as often as possible. It is recommended that the batteries are to be charged at least every 3rd month - otherwise will the batteries have reduced capacity due to self-discharge. It is recommended to test the battery function at least once every year.

Replacement of batteries
The batteries must only be replaced by the same type of batteries or mechanical and electrical equivalent types.The batteries must be new or maintained by means of charging at least every 3rd month. The batteries, which make a set, must be supplied with identical production codes. Mismatching of production codes may lead to a severely reduced life time expectancy.
Before mounting ensure that the battery set is correctly connected, compare with the drawing in the battery room, and check that no connectors are loose.

Warnings
From the factory the battery room is hermatically separated from the electronics room. When replacing the batteries this separation must not be damaged or modified as this may allow penetration of battery gas into the electronics room with risk of explosion.

When replacing batteries in waterproof products (IPX5 and IPX6) precautions must be taken that the sealing material (silicone ring or joint filler) is not damaged and that it is correctly placed in the groove. Hereafter the screws in the cover are to be fastened with appox. 1 Nm. If the seal is damaged it must be replaced by a new silicone string (LINAK article no. 0008004 for a roll of 100 metres).

Disposal
The batteries, which are lead-acid batteries, can be returned to LINAK or disposed in the same way as car batteries.

Warnings
The battery room is supplied with ventilation that ensures correct and necessary airing of the battery room. This airing must not be blocked or covered as a positive pressure may occur with risk of explosion.

If the product has been exposed to mechanical overload (lost on the floor, collision/squeezing in the application or a powerful stroke) the product must be sent to an authorised workshop for control of the hermetic separation between the battery and electronics rooms.

Using control boxes with speed control
The common way of carrying out a speed control of the actuators is by using PWM, switching the motor on/off at a high frequency.
In rare cases, while switching the motor on/off, we have experienced that the coupling between the actuators and application frame and ground is too high, thus generating a slight current noise which exceeds the allowable EMC limits. The current in question is extremely low and is in no way related to any personal or patient risk.

The coupling is defined by the mechanical layout of the application, and no real guidelines can be given. Using plastic bushings or similar can improve the application.

If an application faces this issue, it can easily by solved by connecting ground of the CB box to the application frame-, through a cable with built in serial connection of a resistor and a capacitor.

The EMC test defined in IEC60601-1-2, applicable for all medical products, will show if this is an issue concerning the specific applications.

If you need more information or have any issues on this subject, please contact your LINAK A/S Sales contact.

Design criteria when using a customized CB
When using a customized CB together with a LINAK actuator, the interface connection between the CB vs. Actuator as well as the purpose of the actuator (with or without feedback) must be considered.

Actuators with feedback
E.g. potentiometer solutions have certain technological characteristics due to the design that might cause quality issues if used outside the specification range.

The connection interface
The connection interface is not only the compatibility of the plug types used, e.g. male mini-fit to female mini-fit plug type.

It is also considering the contact transition, i.e. the cable as well as the cable connector, the connecting plug, the material surface of the plug PIN, the soldering of the PCB plug connector etc.

When however using a LINAK Actuator with feedback AND having a bad connection interface towards a Customized CB – LINAK only guarantees the feedback voltage to be within 500 mV (+/- 250 mV).

1. CA30/CA40 (MEDLINE® CARELINE®)

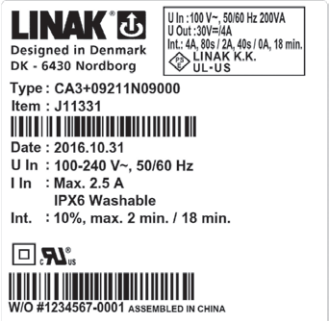

The control boxes CA30 and CA40 are developed as part of a new control box platform for the care and rehab industry.

The control boxes can be mounted separately on the application by means of unique slide-on brackets, but also on several actuator models using a specially designed actuator bracket.

Usage:

- Duty cycle: 10 % - 2/18 min. on/off continuos use.
  Maximum power is 120 W for 80 seconds and 60 W for 40 seconds at 25 °C

LED indicator

CA30/CA40 is equipped with a three-colour LED for indication of mains or battery operation.

Connected to MAINS	
LED colour	**Indication of operation**
Green	**On mains, <u>not</u> activated by hand or foot control.** The system is working ok and is ready for normal operation
Yellow	**On mains, <u>not</u> activated by hand or foot control.** The system is defective and should not be operated.
Yellow	**On mains, activated by hand or foot control.** The system is working.

Not connected to mains but with BATTERY back-up	
LED colour	**Indication of operation**
Orange	**On battery, activated by hand or foot control.** The system is working
No LED	**On battery, <u>not</u> activated by hand or foot control.** or CA30/CA40 not connected to mains

Mounting instructions (Example CA30-CA40 with LA40)

When mounting the control box onto the actuator (1)

Simply slide on the bracket until you hear a clear click (2)

Slide on the control box until you hear a click and the box is mounted (3)

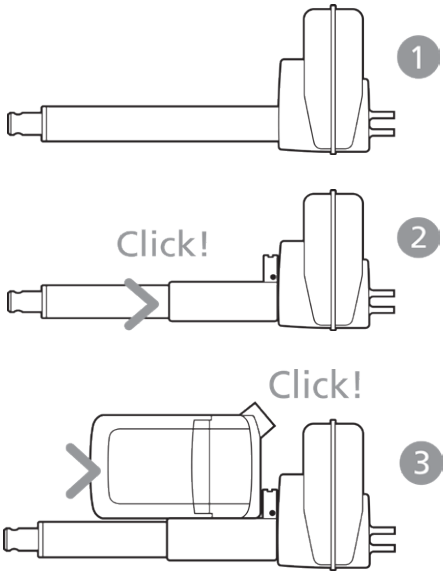

It is recommended that the CA30/CA40 is mounted in a position that allows water to escape.

Recommended torque: 0.6 Nm +/-0.1

The bracket can be mounted to the bed frame or any other application by means of one of the following mounting procedures:

1) M6 nut to be placed in bracket and fixed with M6 bolt from the rear side.
2) M5 machine screw with flat washer to be fixed through bracket with nut on the rear side.
3) Self-tapping screw to be placed through bracket and onto the frame.

Mounting of cables and cable lock:

The control boxes CA30/CA40 have a uniquely designed cable lid. The lid also works as an integrated cable lock when closed.

1) Mount cable plugs in control box
2) Close lid until lock snaps into place (see arrows)

To allow free access to the cables, the lid has a rest position when completely opened. It is possible to remove the lid by lifting it a few degrees and pulling it away from the housing under tight mounting conditions.

See illustrations:

Cable management:

1

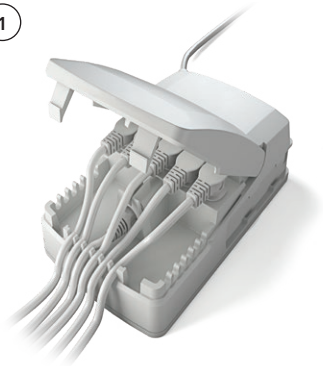

2

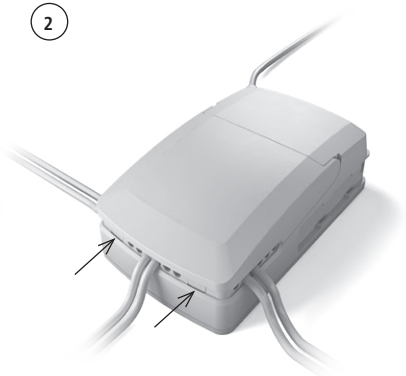

Battery Operation
CA30 and CA40 are only compatible with batteries with built-in charger, BA19 or BA21.

EOP- electronic overload protection
Remark - common/individual current measurement.
As default, the current cut-off is set to 8 A per channel. The total current cut-off default setting is 8 A. If more channels run at the same time, 8 A are distributed equally.

Recommendations

- Note that the common current limit on CA30-CA40 is 8 A and may cause overload on certain actuator types.
- Be aware that the channel configuration has been changed compared to existing analogue control boxes.
- To avoid unintended movement like trend or antitrend, LINAK recommends the application manufacturer to instruct the end user to avoid that multiple keys are pressed simultaneously.
- Push plugs fully into correct sockets and make sure that the plugs are completely inserted.
- Mount the control box lid and close it until locked in place.

Warnings

- Due to the half-bridge technology, pressing multiple keys simultaneously might cause an unintended trend or antitrend movement (application environment 4).

2. CA63 (MEDLINE® CARELINE®)

The LINAK control box CA63 with analogue input offers a consolidated range of unprecedented features – all utilising standardised technology, interfaces and compatibility.

The CA63 for LINAK actuators is intended for the control of, for example, Home Care Bed. Equipped with 200 W SMPS, excellent and well-thought-out cable management as well as multiple easy mounting options, this control box opens up a wide range of application possibilities for the provident hospital and care products manufacturer.

Features:

- Duty cycle: 10 % - 2/18 min. on/off continuous use.
  Maximum power is 200 W for 80 seconds and 100 W for 40 seconds at 25 °C.

Usage:

- Operation temperature: +5 °C to +40 °C
- Storage temperature: -10 °C to +50 °C
- Relative humidity: 20% to 80% - non-condensing
- Atmospheric pressure: 700 to 1060 hPa (3000 m)
- Meters above sea level: Max. 3000 meters
- Approvals: IEC60601-1 edition 3.1
  ANSI/AAMI ES60601-1:2005/(R) 2012
  CSA CAN/CSA-C22.2 NO. 60601-1:14
  IPX6 Washable in accordance with IEC60601-2-52

LED indicator

CA63 is equipped with a green LED for indication of mains power connected. When the CA63 is connected to mains, the LED is green. Connected only to battery, the LED is off.

Connected to MAINS	
LED colour	**Indication of operation**
Green	**On mains, not activated by hand or foot control.** The system is working ok and is ready for normal operation.
Yellow	**On mains, not activated by hand or foot control.** The system is defective and should not be operated.
Yellow	**On mains, activated by hand or foot control.** The system is working.

Not connected to mains but with BATTERY back-up	
LED colour	**Indication of operation**
Orange	**On battery, activated by hand or foot control.** The system is working.
No LED	**On battery, not activated by hand or foot control.** or CA63 not connected to mains.

Acoustic signal functionality:

The buzzer will make a warning, when a button on the hand control is pressed, and the battery state of charge is low. The buzzer can also be activated by the control box to signal other conditions. This must be specified in the control box software.

Mounting bracket (frame flat) - article No. 1015W1001:

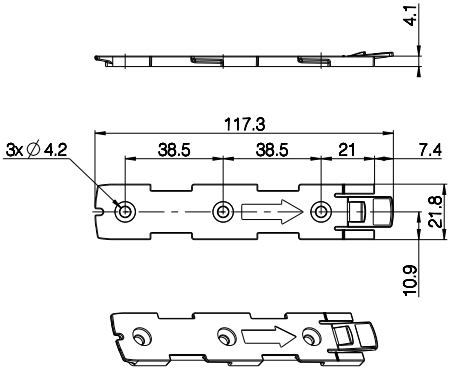

Drawing No.: 1015W4001

Mounting bracket (frame flat) w/M4 nuts - article No. 1015W9009:

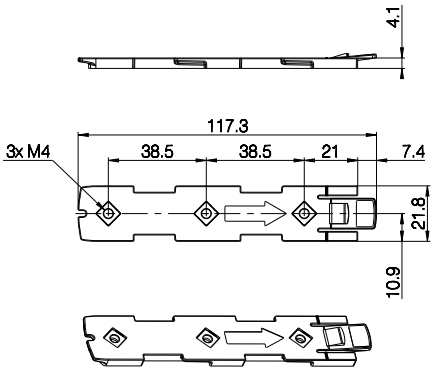

Drawing No.: 1015W4009

CA63 - mounted on frame:

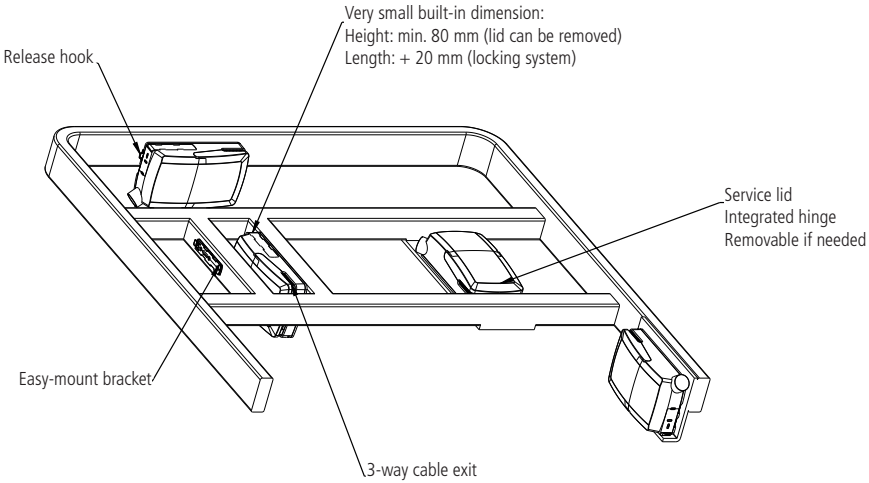

Drawing No.: 1013W4008

Mounting instructions (Example CA63 with LA40)

When mounting the control box onto the actuator (1)

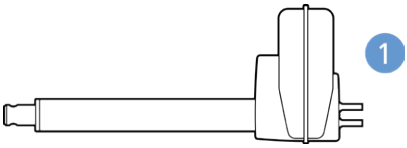

Simply slide on the bracket until you hear a clear click (2)

Slide on the control box until you hear a click and the box is mounted (3)

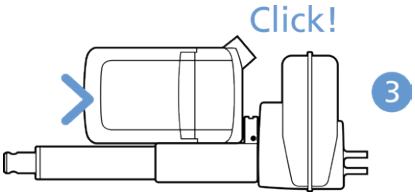

It is recommended that the CA63 is mounted in a position that allows water to escape.

Recommended torque: 0.6Nm +/-0.1

The bracket can be mounted to the bed frame or any other application by following one of the following mounting procedures:

1) M6 nut to be placed in bracket and fixed with M6 bolt from the rear side.
2) M5 machine screw with flat washer to be fixed through bracket with nut on the rear side.
3) Self-tapping screw to be placed through bracket and onto the frame.

Mounting of cables and cable lock:

CA63 has a uniquely designed cable lid. The lid also works as an integrated cable lock when closed.

1) Mount cable plugs in control box
2) Close lid until lock snaps into place (see arrows)

To allow free access to the cables, the lid has a rest position when completely opened. It is possible to remove the lid by lifting it a few degrees and pulling it away from the housing under tight mounting conditions.

See illustrations:

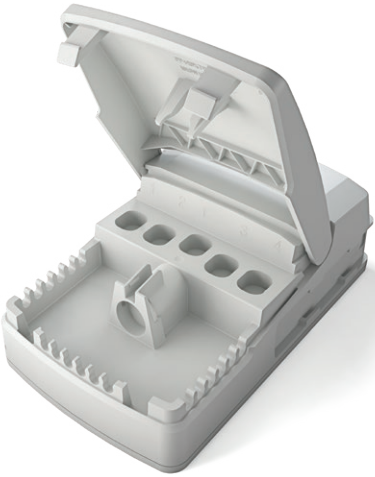

1

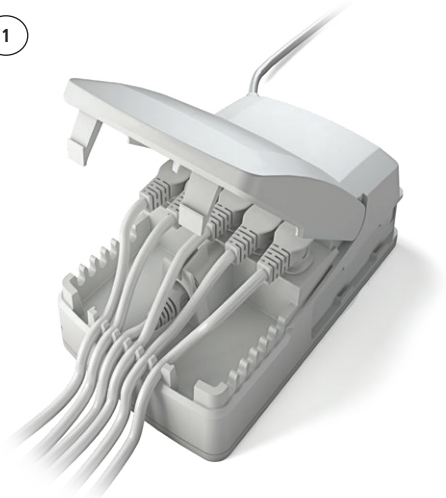

Cable management:

2

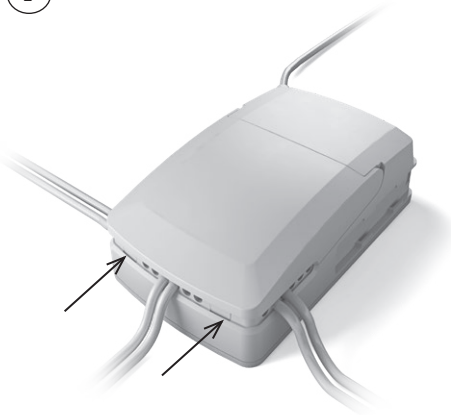

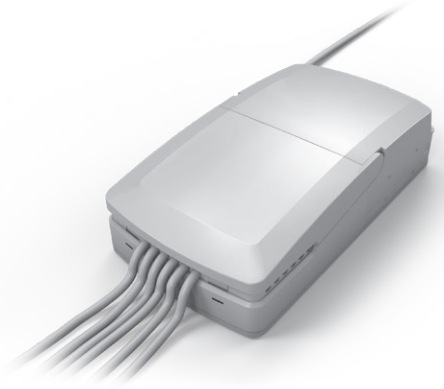

Recommendations

- If there is a risk that the system is overloaded and therefore shuts down thermally, LINAK recommends to use quick release actuators. These will allow functions to be lowered manually in case of a CA63 malfunction due to misuse/abuse.
- If the customer has other essential performance than "no unintended movement", he must consider this in his own risk analysis. LINAK disclaims any liability.
- If the actuator or the control cable is removed from the control box, the cable lock must be applied. To ensure movement in this case, LINAK recommends to use quick release actuators in the application.
- To avoid cables from being damaged by pulling, LINAK recommends to make safe cabling. If movement is an essential performance, LINAK recommends to apply quick release actuators, for example, to ensure movement.
- To avoid thermal protection from being activated, do not exceed load specifications. If movement is an essential performance, LINAK recommends to apply quick release actuators, for example, to ensure movement.
- Sales must request a review of the products according to current cut-off limits.

Motor cable

Always use 6-wire cables.

Please note that angled motor cable plugs are required for connection to the control box.

Warnings

- PB31 MUST NOT BE CONNECTED DIRECTLY TO CA63 HAND CONTROL CONNECTOR (RJ45) AS THIS WILL CAUSE DAMAGE TO PB31. Can only be programmed with PB31 by use of a special programming adaptor.
- Use EPR or ensure that the user takes care not to squeeze the mains cable.
- Always check correct assembly after mounting and service to ensure that the cable lock is mounted. (Connectors are usually removed during cleaning)
- Always use approved chemicals with the housing as the plastic may show corrosion caused by some chemicals. As a result water may accumulate/gather in housing.
- Take special precautions concerning 3rd party interfacing. Please contact LINAK for further information.
- Make a review of all product specifications before system set-up if the current cut-off limit is higher than the maximum allowed current cut-off for the actuator.
- To avoid cable interruption and actuator defects make a proper cable installation and inspect regularly for wear and damage. Defective parts must be replaced.
- After service inspection, the application must be tested for correct functionality before it is put into operation to avoid actuator plugs being mixed during service. Operators must not be inside entrapment area.
- To avoid electrical failure or system disturbance inspect regularly for wear and damage. Defective parts must be replaced.
- Make a proper cable installation to avoid short-circuit cables for handset/controls. Regular inspection must be made for wear and damage. Defective parts must be replaced.
- Do not mount the actuator with the spindle facing downwards to avoid that the actuator slips off the bracket with mounted control box. The bracket can come loose when exposed to shock or hard vibratio, for instance when passing doorsteps. Regular inspection must be made to ensure proper fixation of control box and bracket on actuator.

3. CB6 (MEDLINE® CARELINE®)

The control box CB6 has been specially developed for use together with LA27/LA40 actuator in the care and rehab industry.
The control box is designed to be mounted on the actuator LA27/LA40 as with the CB9 and LA31 system.
The CB6 control box has a LED power ON indicator, detachable mains cable and strain relief for all cables.
The control box CB6 communicates with the LA27/LA40 actuator by means of the built-in end stop signal switches in the actuator. Due to the signal switches the power to the motor will be cut off in the control box and not in the actuator.

Usage:

- Duty cycle: 2/18; 2 minutes continuous use followed by 18 minutes not in use
- CB6 is approved according to EN60601-1 / UL60601-1
- The CB6 can only be combined with LA27/LA40 and HB30 / HB70 / HL70 / HB80 and HL80.

Recommendations

- Be aware of the hand control configuration (e.g. CH1, 2, 3 should be CH1, 3, 4).
- Same cables variants as for CB9 CARELINE and CB12.

Connecting the system:

- Do not connect the mains cable until all actuators have been connected to the control box.
- Start by connecting the hand control to the control box. The connection at the control box is marked with "HB".
- Connect the different actuators to the different channels on the control box. Each channel is marked with a number (e.g. "1", "2", "3"....).
- Check that all plugs are well connected and firm pushed into the connection plug. Due to the fact that LINAK control boxes are designed for a high IP degree, a firm force can be required.
- CONNECT the mains and turn on the power!
- Finally, connect the battery (BA18) with special T-cable or normal battery cable depending on the specified system.
- The actuators can now be operated by pushing a button on the hand control. Use only one button at a time.

If the control box is equipped with special software, an initialising process might be necessary. This process is described in the software specification.

CB6 system diagram

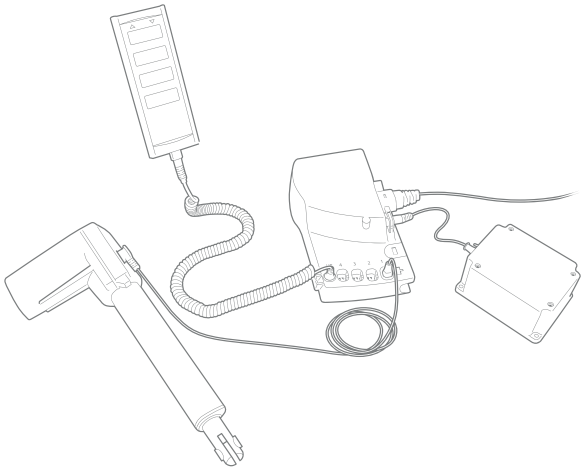

Attention should be paid to the following:

- Control boxes must only be connected to the mains voltage specified on the label.
- The control box must be connected in such a way that the cables are not trapped, exposed to tension or sharp objects, when the application is moved in different directions.

4. CB6P2 (MEDLINE® CARELINE®)

The CB6P2 platform is introduced to obtain a powerful and optimised solution to customers looking for existing analogue input systems. It is based on OpenBus™ technology, but to meet existing analogue systems it has an analogue input and therefore OpenBus™ accessories cannot be connected.

Combination Overview

CB6P2 is meant for use with:

LA27 std. motor with Hall (cable type 'A')
LA27 std. motor (cable type 'B')
LA31 std. / fast motor with / without Hall
LA34 std. / small / fast motor with / without Hall (fast motor not max. load)
LA40 std. motor with / without Hall
LA44 std. / fast motor with / without Hall (fast motor not max. load)
BL1 (only with 270W transformer type) with / without Hall
HB7x, HL7x, HB8x, ACL / ACM

Recommendations

Battery Operation:

- If the battery voltage is at '*low level*', a battery alarm beeps constantly when the HB/ACx is activated. (Low level means that battery charging is necessary to maintain the best possible life time. Low level battery limit corresponds to approx. 19 V (+/- 5 %).
- If the battery voltage is at 'critical level' the battery alarm function shuts down all operation immediately.
  Critical level limit corresponds to approx. 17.5 V (+/- 5 %).
- If battery back-up is applied it only commences battery charging when it is connected to the mains.
- A battery stored at 25 °C has to be recharged every 6 - 7 months.
- Prior to first use of LINAK batteries, please make sure that they are charged for 24 hours in order to reach proper function and prolong the lifetime of the batteries.
- The longest lifetime is obtained when the battery is fully charged.

5. CB7 (HOMELINE®)

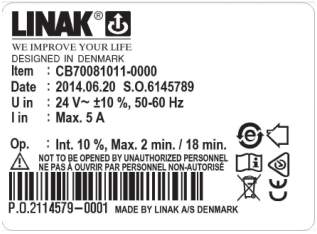

Compared to other LINAK control boxes the CB7 is very small and compact in design.

The CB7 is designed to slide onto an LA31 actuator for easy fitting e.g. in a recliner application where "*mounting*" space is limited.

The control box function is divided in two parts. The actual control box CB7, which slides onto the LA31 actuator and a separate external power supply transformer box TR6 or TR7, which can be wall mounted or placed on the floor moulding next to the mains.

The control box is only fitted with low voltage electronic components and the connection between the CB7 and transformer is via a 24 V power cable.

6. CB8A (MEDLINE® CARELINE® TECHLINE®)

The CB8A is a battery powered control box operating up to 3 actuators individually. One of these channels can be used either as an external emergency stop device or for battery charging.

Simple design and high quality construction make the CB8A an ideal control box choice for mains-free operation of beds, chairs, tables and many other mobile applications.

Usage:

- Duty cycle: Max. 5% or 3 min. in use followed by 57 min. not in use
- Ambient temperatures: + 5 °C to +40 °C
- Approvals: IEC60601-1:2005 3rd edition approved ANSI/AAMI, ES60601-1:2005 3rd edition approved.

Recommendations

- Note: max. accumulated power consumption is 10 Amp.
- The measurement is individual for each channel, but if the total current consumption reaches 10 Amp, the CB cuts off the current. The CB and the actuator are therefore protected via a common measurement.
- External Charger CH01 has to be ordered separately. By use of charger CH01 it is possible to activate the actuators when charging. However, this is not recommended as it can damage the control box or the charger CH01.
- Battery kit BA0801 has to be ordered separately for versions M, G, H, Q, R (2 channel) and version M (3 channel).
- When using the CB8A with emergency stop button, the stop button must be released before charging batteries.
- Acoustic alarm sounds when batteries are low and recharging should be started. The alarm level corresponds to approx. 17-18 VDC.
- If the CB800XXXXN-X0 option is chosen, an external emergency stop device (NC) or short-circuiting connection must be mounted in channel 3, before connection to allow proper function and battery charging.

Important: Individual current cut-off:
The current to each actuator is monitored and when this reaches a specified value, the current to that actuator is cut-off.
As the actuators do not have the same current consumption the cut-off values must also be different. Therefore it must be specified which actuator is to be connected to which channel:

CURRENT CUT-OFF (A)
2 A (2.35 +/- 0.35 Amp)
3 A (3.00 +/- 0.35 Amp)
4 A (4.00 +/- 0.50 Amp)
5 A (5.35 +/- 0.50 Amp)
6 A (5.90 +/- 0.70 Amp)

Values in brackets show tolerances.

7. CB8-T (MEDLINE® CARELINE® TECHLINE®)

The CB8-T is developed for use with LINAK A/S' actuators and handsets. The control box can operate up to 2 actuators individually.

The simple compact design combined with high quality makes the control box ideal for use with beds, chairs, tables and many other applications.

Important: Individual current cut-off:
The current to each actuator is monitored and when this reaches a specified value, the current to that actuator is cut-off.
As the actuators do not have the same current consumption the cut-off values must also be different. Therefore it must be specified which actuator is to be connected to which channel:

CURRENT CUT-OFF (A)
2 A (2.35 +/- 0.35 Amp.)
3 A (3.00 +/- 0.35 Amp.)
4 A (4.00 +/- 0.50 Amp.)
5 A (5.35 +/- 0.50 Amp.)
6 A (5.90 +/- 0.70 Amp.)

Values in brackets show tolerances.

8. CB9 (HOMELINE®)

The CB9 has been developed for Home use. The CB9 and the LA31 can be fully integrated, which saves mounting and wiring or be installed separately.

The HOMELINE CB9 series is available as either analogue (Ax) or µ-processor based (Px) types.

9. CB9 CARELINE and CB9 CARELINE Basic (MEDLINE® CARELINE®)

The CB9 CARELINE and CB9 CARELINE Basic have been developed for use together with LA31/LA31R, LA34/LA34R* in the Care & Rehab industry. CB9 and LA31 can be fully integrated which saves mounting and wiring or be installed separately.

Exchangeable mains cables, Electronic Overload Protection (EOP), EAS, earth connection (Class 1) and exchangeable mains fuse makes CB9 a good choice for the simple hospital and care beds.

Usage:

- Duty cycle: Max. 10% or 2 min. continuous use followed by 18 min. not in use
- Ambient temperature: +5° to +40°C
- Compatible with up to 4 actuators, type LA31 and LA34, via 4-pole DIN sockets
- Compatible with BA18
- For approvals information see LINTRA/Development/Certificates
- Approvals: - IEC60601-1
  - ANSI/AAMI ES60601
  - CSA CAN/CSA C22.2 NO. 60601-1
  - PSE Japan

Recommendations

LA34 fast motor is not compatible with any standard versions of CB9, due to high current consumption. For use of LA34 standard motor and small motor always use a CB9 with EAS.

Additionally, actuators with reed switch are not compatible with analogue CB9s because of a conflict between the CB signal wires and the reed wires!

CB9 is equipped with a green LED for indication of mains power connected.

- When the CB9 is connected to mains, the LED is green.
- Connected only to battery, the LED is off.

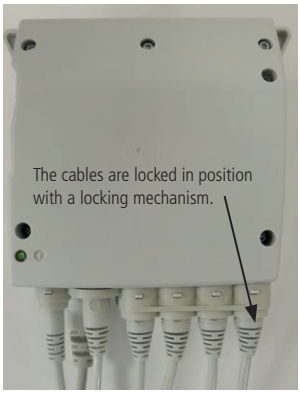

CB9 mounted on actuator, LA31.

CB9 for mounting on application. Shows the two holes used for mounting

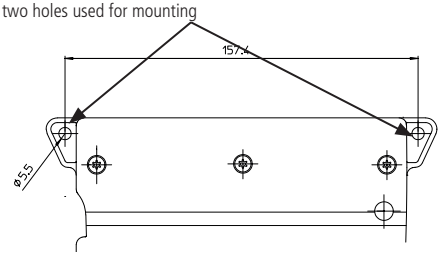

CB9 can be mounted and fixed together with LA31 with one screw.

10. CB20 (MEDLINE® CARELINE®)

CB20 is a platform which offers a unique safety concept, logging off service data and it is possible to connect a variety of accessories to the control box.

The CB20 consists of 3 modules :
CP20 = **C**ontrol **P**ower CU20 = **C**ontrol **U**nit BA20 = **Ba**ttery.

For recommendations on maintenance and storage of the BA20 battery packs, please refer to chapter 5.

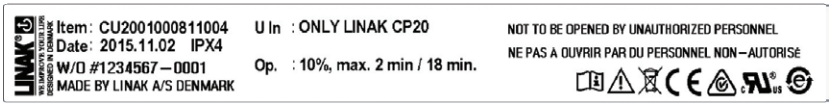

Usage:
- Compatible with specific versions of LA23, LA31, LA34, LA40, LA43, LA44 and BL1
- Duty cycle: 10 % - max. 2 min. continuous use followed by 18 min. not in use
- Ambient temperature: + 5 °C to + 40 °C
- Approvals: IEC60601-1:2005 3rd ed., ANSI / AAMI ES60601-1:2005, 3rd edition, CAN/CSA-22.2 No 60601-1:2008 approved

Please be aware:
CB20 is delivered in 3 separate units - CU20 + CP20 + BA20. The units are not assembled at LINAK A/S.

Microprocessor
All control boxes with a microprocessor must be initialized before start-up. A description of the initialization procedure can be obtained from your LINAK dealer. If an actuator is replaced, the microprocessor always has to be initialized before use (actuators with reed/hall). If re-programmed, please ensure that the correct software is used.

External battery charger
If anything other than a LINAK® charger is used, it must conform to the following specifications: Charging voltage: 28.0 VDC ± 2 %
Charging current: < 300 mA.

Recommendations

- Please note mains cable must be ordered separately

HOT PLUGGING
Removing or adding any OpenBus™ cables are not allowed when the CB is powered by mains supply! If necessary anyway follow the below procedure:
1. Remove mains and wait 5 sec.
2. Mount or dismount the required cables
   If this procedure is NOT followed it may result in a damaged OpenBus™ driver circuit. The risk of a damaged circuit increases if the accessory has a high start current (in rush current).
- Please note mains cable must be ordered separately.

Battery running:
- If battery capacity is under 50% a "bip" sound is given for 2 seconds, when a hand control key is pressed.
- If the system is activated and the mains plug is pulled out, the system will stop. In the opposite case, if the system is running using battery power and the mains plug is then plugged in, the system will continue running.
- The charging indicator can blink if the system operates with a high load causing the voltage to drop and because of this the batteries will start to charge.
- The CB20 with battery back-up only commences battery charging when it is connected to the mains.
- A running battery must be charged for at least 12 hours before use.
- For recommendations on charging cycles and first use of the BA20 battery pack, please refer to chapter 5.

11. CBR1 (MEDLINE® CARELINE® HOMELINE®)

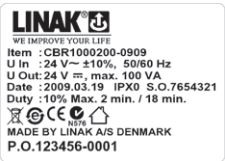

The CBR1 has been developed for use together with the RA40 Rotary actuator. The CBR1 can be installed in the same profile as the RA40 Rotary actuator thus saving mounting and wiring.

12. CO53 (MEDLINE® CARELINE®)

The LINAK® control box CO53 is a new member of the OpenBus™ range. The control box offers a 190 Watt power supply, a small and compact design and the ability to handle multiple hand controls or other OpenBus accessories for applications with a need for more advanced features.

Features:
- Duty cycle: 10% - 2/18 min. on/off continuous use

Usage:
- Operation temperature: +5 °C to +40 °C
- Storage temperature: -10 °C to +50 °C
- Relative humidity: 20% - 80% not condensing
- Atmospheric pressure: 700 to 1060 hPa
- Meters above sea level: Max. 3000 meters
- Approvals: IEC60601-1
  ANSI/AAMI ES60601-1
  CSA CAN/CSA-C22.2 NO. 60601-1

Thermal Protection
CO53 is thermally protected. The CO53 protects itself by shutting down. Once the thermal condition is normalised, the CO53 will recover and allow further operation.

Recommendations

NOTE - HOT PLUGGING
Removing or adding any OpenBus™ cables are not allowed when the control box is powered by mains supply!

If needed anyway, follow the below procedure:

1. Remove mains and wait 5 sec.
2. Mount or dismount the required cables

If this procedure is NOT followed, it may result in a damaged OpenBus driver circuit. The risk of a damaged circuit increases if the accessory has a high start current (in rush current).

NOTE - Use of internal mains signal in software or on OpenBus
Please be aware when using the internal mains signal on control boxes with SMPS that the mains signal may take up to 6 seconds before disappearing after mains has been removed.

Battery operation:

BATTERY LEVELS

Battery High: > 20 V	- normal
Battery Medium: 18-20 V	- alarm
Battery Low: < 18 V	- critical

- If the battery voltage is at '*Medium level*', a battery alarm beeps as long as a key is activated. (Medium level means that battery charging is necessary to maintain the best possible lifetime).
- If the battery voltage is at '*Low level*', the battery alarm function shuts down all movement immediately. The OpenBus is still active for approx. 15 seconds. If trying to operate the system anyway, the battery could get deep drained or the actuator system could get damaged. When at low battery level (which is critical), there is a risk that the processor will incorrectly monitor the end of stroke. Crashing the actuator could be a result.
- The CO53 with battery back-up only starts battery charging when it is connected to the mains.

LED indicator

CO53 is equipped with a green LED for indication of mains power connection and an orange LED for indication of hand or foot control activation.
When the CO53 is connected to mains, the LED is green and when connected to battery, the LED is off.

Connected to MAINS	
LED colour	**Indication of operation**
Green	**On mains, <u>not</u> activated by hand or foot control.** The system is working ok and is ready for normal operation.
Green and orange	**On mains, <u>not</u> activated by hand or foot control.** The system is defective and should not be operated.
Green and orange	**On mains, activated by hand or foot control.** The system is working.

Not connected to mains but with BATTERY back-up	
LED colour	**Indication of operation**
Orange	**On battery, activated by hand or foot control.** The system is working.
No LED	**On battery, <u>not</u> activated by hand or foot control.** or CO53 not connected to mains.

Acoustic signal functionality:
The buzzer will make a warning, when a button on the hand control is pressed, and the battery state of charge is low. The buzzer can also be activated by the control box to signal other conditions. This must be specified in the control box software.

Mounting bracket (frame flat) - article No. 1015W1001:

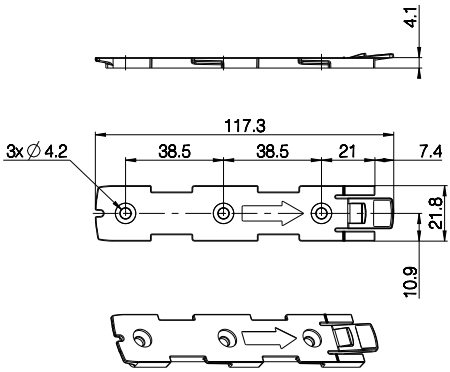

Drawing No.: 1015W4001

Mounting bracket (frame flat) w/M4 nuts - article No. 1015W9009:

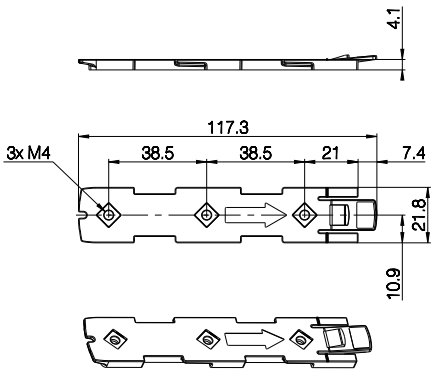

Drawing No.: 1015W4009

Screw bracket spacer - article No. 1015W1001:

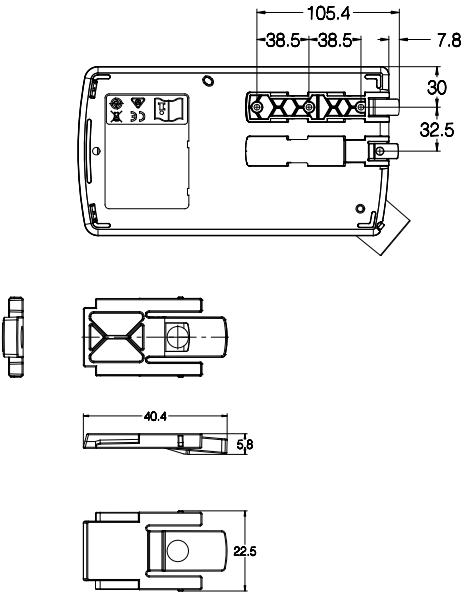

Drawing No.: 1054W4001

CO53 - mounted on frame:

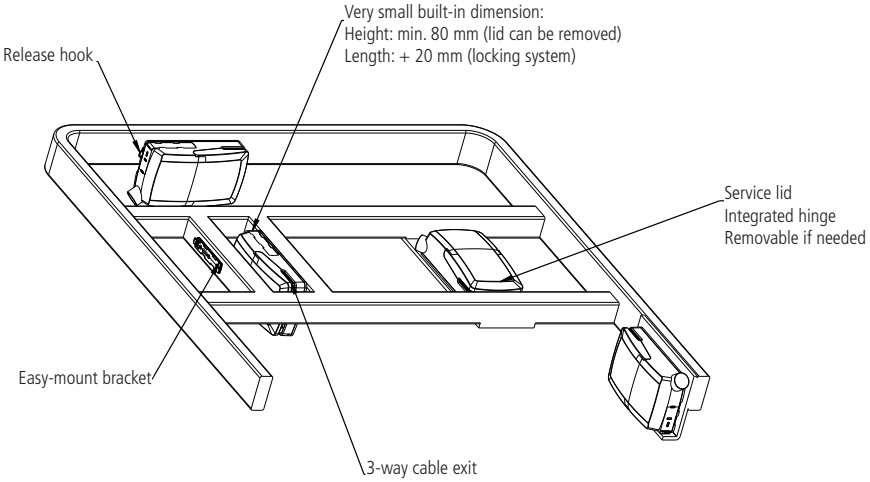

Mounting instructions (Example CO53 with LA40)

When mounting the control box onto the actuator (1)

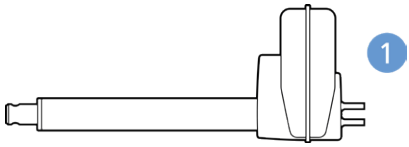

Simply slide on the bracket until you hear a clear click (2)

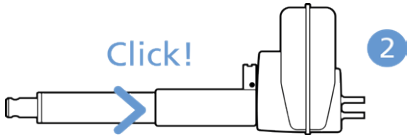

Slide on the control box until you hear a click and the box is mounted (3)

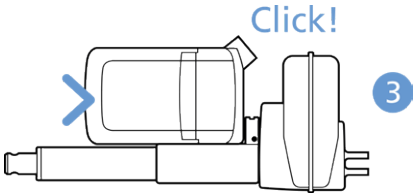

It is recommended that the CO53 is mounted in a position that allows water to escape.

Recommended torque: 0.6Nm +/-0.1

The bracket can be mounted to the bed frame or any other application by following one of the following mounting procedures:

1) M6 nut to be placed in bracket and fixed with M6 bolt from the rear side.
2) M5 machine screw with flat washer to be fixed through bracket with nut on the rear side.
3) Self-tapping screw to be placed through bracket and onto the frame.

Mounting of cables and cable lock:

CO53 has a uniquely designed cable lid. The lid also works as an integrated cable lock when closed.

1) Mount cable plugs in control box
2) Close lid until lock snaps into place (see arrows)

To allow free access to the cables, the lid has a rest position when completely opened. It is possible to remove the lid by lifting it a few degrees and pulling it away from the housing under tight mounting conditions.

See illustrations:

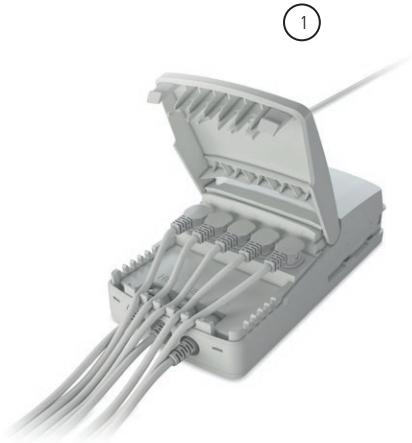

Cable management:

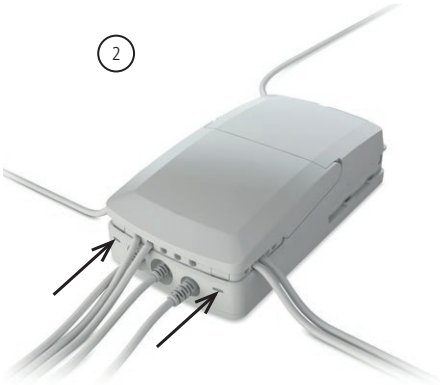

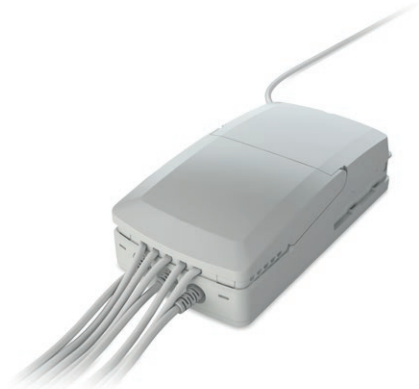

Recommendations

- To avoid unintended activation of actuators if hand control cables short-circuit, LINAK® recommends to use an OpenBus™ system (CO53).
- If there is a risk that the system is overloaded and therefore shuts down thermally, LINAK recommends to use quick release actuators. These will allow functions to be lowered manually in case of a CO53 malfunction due to misuse/abuse.
- If the customer has other essential performance than "*no unintended movement*", he must consider this in his own risk analysis. LINAK disclaims any liability.
- If the actuator or the control cable is removed from the control box, the cable lock must be applied. To ensure movement in this case, LINAK recommends to use quick release actuators in the application.
- To avoid cables from being damaged by pulling, LINAK recommends to make safe cabling. If movement is an essential performance, LINAK recommends to apply quick release actuators, for example, to ensure movement.
- To avoid thermal protection from being activated, do not exceed load specifications. If movement is an essential performance, LINAK recommends to apply quick release actuators, for example, to ensure movement.
- Sales must request a review of the products according to current cut-off limits.
- Push plugs fully into correct sockets and make sure that the plugs are completely inserted.
- Mount control box lid and close lid until locked in place.

Warnings

- Use EPR or ensure that the user takes care not to squeeze the mains cable.
- Always check correct assembly after mounting and service to ensure that the cable lock is mounted. (Connectors are usually removed during cleaning)
- Always use approved chemicals with the housing as the plastic may show corrosion caused by some chemicals. As a result water may accumulate/gather in housing.
- Take special precautions concerning 3rd party interfacing. Please contact LINAK® for further information.
- Make a review of all product specifications before system set-up if the current cut-off limit is higher than the maximum allowed current cut-off for the actuator.
- To avoid cable interruption and actuator defects make a proper cable installation and inspect regularly for wear and damage. Defective parts must be replaced.
- After service inspection, the application must be tested for correct functionality before it is put into operation to avoid actuator plugs being mixed during service. Operators must not be inside entrapment area.
- To avoid electrical failure or system disturbance inspect regularly for wear and damage. Defective parts must be replaced.
- Make a proper cable installation to avoid short-circuit cables for handset/controls. Regular inspection must be made for wear and damage. Defective parts must be replaced.
- Do not mount the actuator with the spindle facing downwards to avoid that the actuator slips off the bracket with mounted control box. The bracket can come loose when exposed to shock or hard vibrations, for instance when passing doorsteps. Regular inspection must be made to ensure proper fixation of control box and bracket on actuator.

13. CO61 (MEDLINE® CARELINE®)

The LINAK control box CO61 offers a consolidated range of unprecedented features – all utilising standardised technology, interfaces and compatibility.

The CO61 for LINAK actuators is intended for the control of, for example, hospital bed movement. Equipped with 200W SMPS, excellent and well thought-out cable management as well as multiple easy mounting options, this control box opens up a wide range of application possibilities for the provident hospital and care products manufacturer.

Features:

- Duty cycle: 10 % - 2/18 min. on/off continuous use.
  Maximum power is 200 W for 80 seconds and 100 W for 40 seconds at 25 °C.

Usage:

- Operation temperature: +5 °C to +40 °C
- Storage temperature: -10 °C to +50 °C
- Relative humidity: 20% to 80% - non-condensing
- Atmospheric pressure: 700 to 1060 hPa (3000 m)
- Meters above sea level: Max. 3000 meters
- Approvals: IEC60601-1 edition 3.1
  ANSI/AAMI ES60601-1:2005/(R) 2012
  CSA CAN/CSA-C22.2 NO. 60601-1:14
  PSE Japan

LED indicator

CO61 is equipped with a green LED for indication of mains power connected. When the CO61 is connected to mains, the LED is green. Connected only to battery, the LED is off.

Connected to MAINS	
LED colour	**Indication of operation**
Green	**On mains, not activated by hand or foot control.** The system is working ok and is ready for normal operation.
Yellow	**On mains, not activated by hand or foot control.** The system is defective and should not be operated.
Yellow	**On mains, activated by hand or foot control.** The system is working.

Not connected to mains but with BATTERY back-up	
LED colour	**Indication of operation**
Orange	**On battery, activated by hand or foot control.** The system is working.
No LED	**On battery, not activated by hand or foot control.** or CO61 not connected to mains.

Acoustic signal functionality:

The buzzer will make a warning, when a button on the hand control is pressed, and the battery state of charge is low. The buzzer can also be activated by the control box to signal other conditions. This must be specified in the control box software.

Mounting bracket (frame flat) - article No. 1015W1001:

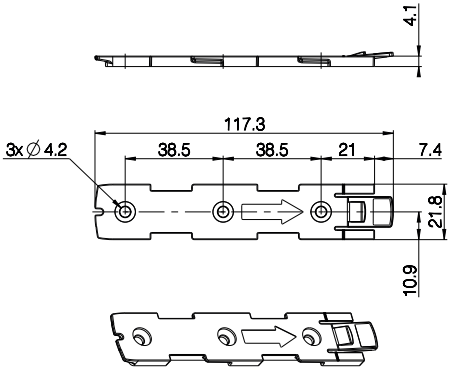

Drawing No.: 1015W4001

Mounting bracket (frame flat) w/M4 nuts - article No. 1015W9009:

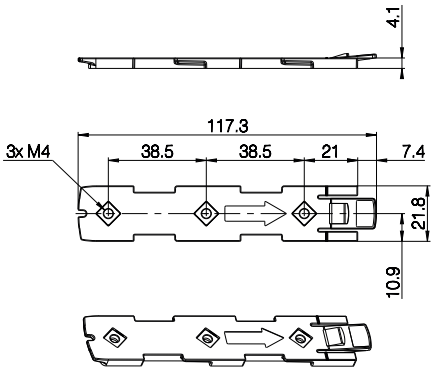

Drawing No.: 1015W4009

CO61 - mounted on frame:

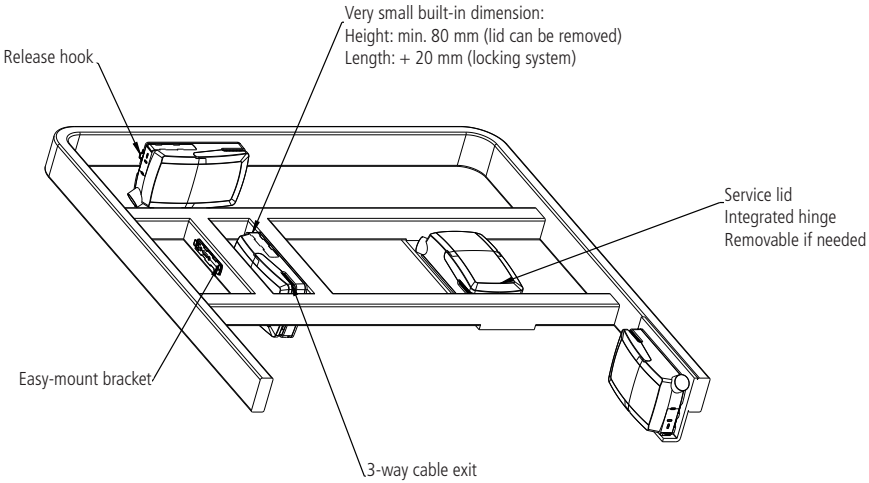

Mounting instructions (Example CO61 with LA40)

When mounting the control box onto the actuator (1)

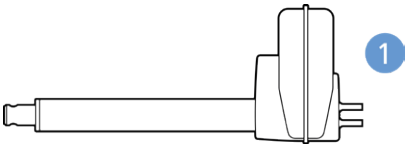

Simply slide on the bracket until you hear a clear click (2)

Slide on the control box until you hear a click and the box is mounted (3)

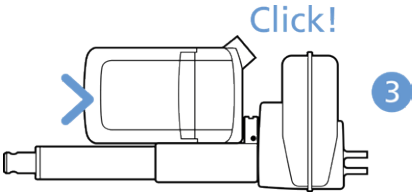

It is recommended that the CO61 is mounted in a position that allows water to escape.

Recommended torque: 0.6 Nm +/-0.1

The bracket can be mounted to the bed frame or any other application by following one of the following mounting procedures:

1) M6 nut to be placed in bracket and fixed with M6 bolt from the rear side.
2) M5 machine screw with flat washer to be fixed through bracket with nut on the rear side.
3) Self-tapping screw to be placed through bracket and onto the frame.

Mounting of cables and cable lock:

CO61 has a uniquely designed cable lid. The lid also works as an integrated cable lock when closed.

1) Mount cable plugs in control box
2) Close lid until lock snaps into place (see arrows)

To allow free access to the cables, the lid has a rest position when completely opened. It is possible to remove the lid by lifting it a few degrees and pulling it away from the housing under tight mounting conditions.

See illustrations:

1

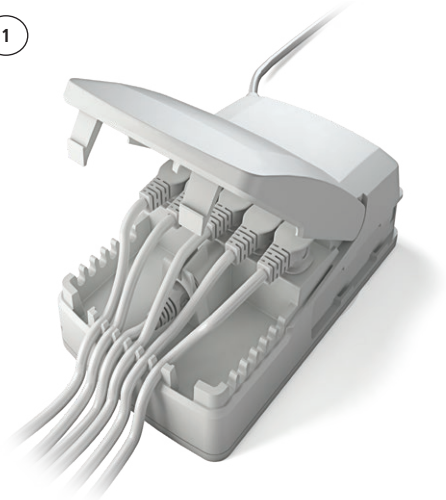

Cable management:

2

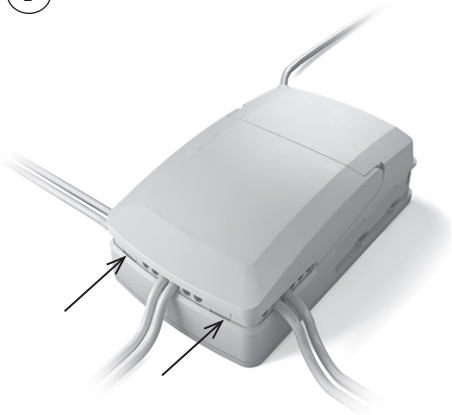

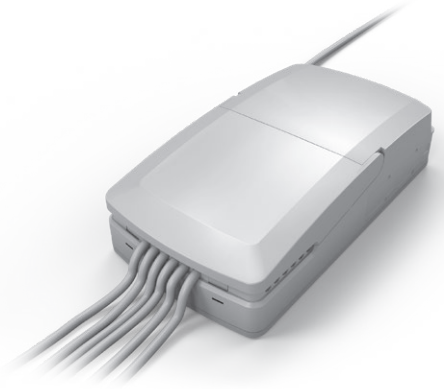

Recommendations

- To avoid unintended activation of actuators if hand control cables short-circuit, LINAK recommends to use an OpenBus™ system (CO61).
- If there is a risk that the system is overloaded and therefore shuts down thermally, LINAK recommends to use quick release actuators. These will allow functions to be lowered manually in case of a CO61 malfunction due to misuse/abuse.
- If the customer has other essential performance than *"no unintended movement"*, he must consider this in his own risk analysis. LINAK disclaims any liability.
- If the actuator or the control cable is removed from the control box, the cable lock must be applied. To ensure movement in this case, LINAK recommends to use quick release actuators in the application.
- To avoid cables from being damaged by pulling, LINAK recommends to make safe cabling. If movement is an essential performance, LINAK recommends to apply quick release actuators, for example, to ensure movement.
- To avoid thermal protection from being acitvated, do not exceed load specifications. If movement is an essential performance, LINAK recommends to apply quick release actuators, for example, to ensure movement.
- Sales must request a review of the products according to current cut-off limits.
- Push plugs fully into correct sockets and make sure that the plugs are completely inserted..
- Mount the control box lid and close it until locked in place.

Motor cable
Always use 6-wire cables.
Please note that angled motor cable plugs are required for connection to the control box.

Warnings

- Use EPR or ensure that the user takes care not to squeeze the mains cable.
- Always check correct assembly after mounting and service to ensure that the cable lock is mounted. (Connectors are usually removed during cleaning)
- Always use approved chemicals with the housing as the plastic may show corrosion caused by some chemicals. As a result water may accumulate/ gather in housing.
- Take special precautions concerning 3rd party interfacing. Please contact LINAK for further information.
- Make a review of all product specifications before system set-up if the current cut-off limit is higher than the maximum allowed current cut-off for the actuator.
- To avoid cable interruption and actuator defects make a proper cable installation and inspect regularly for wear and damage. Defective parts must be replaced.
- After service inspection, the application must be tested for correct functionality before it is put into operation to avoid actuator plugs being mixed during service. Operators must not be inside entrapment area.
- To avoid electrical failure or system disturbance inspect regularly for wear and damage. Defective parts must be replaced.
- Make a proper cable installation to avoid short-circuit cables for hand control/controls. Regular inspection must be made for wear and damage. Defective parts must be replaced.
- Do not mount the actuator with the spindle facing downwards to avoid that the actuator slips off the bracket with mounted control box. The bracket can come loose when exposed to shock or hard vibration, for instance when passing doorsteps. Regular inspection must be made to ensure proper fixation of control box and bracket on actuator.

14. CO65 (MEDLINE® CARELINE®)

The LINAK control box CO65 offers a consolidated range of unprecedented features – all utilising standardised technology, interfaces and compatibility.

Usage:

- Operation temperature: +5 °C to +40 °C
- Storage temperature: -10 °C to +50 °C
- Relative humidity: 20% to 80% - non-condensing
- Atmospheric pressure: 700 to 1060 hPa (3000 m)
- Meters above sea level: Max. 2000 meters
- Approvals: IEC60601-1 edition 3.1
  ANSI/AAMI ES60601-1:2005/(R) 2012
  CSA CAN/CSA-C22.2 NO. 60601-1:14

LED indicator

CO65 is equipped with a green LED for indication of mains power connected. When the CO65 is connected to mains, the LED is green. Connected only to battery, the LED is off.

Connected to MAINS	
LED colour	**Indication of operation**
Green	**On mains, not activated by hand or foot control.** The system is working ok and is ready for normal operation.
Yellow	**On mains, not activated by hand or foot control.** The system is defective and should not be operated.
Yellow	**On mains, activated by hand or foot control.** The system is working.

Not connected to mains but with BATTERY back-up	
LED colour	**Indication of operation**
Orange	**On battery, activated by hand or foot control.** The system is working.
No LED	**On battery, not activated by hand or foot control.** or CO61 not connected to mains.

Acoustic signal functionality:

The buzzer will make a warning, when a button on the hand control is pressed, and the battery state of charge is low. The buzzer can also be activated by the control box to signal other conditions. This must be specified in the control box software.