Mounting bracket (frame flat) - article No. 1015W1001:

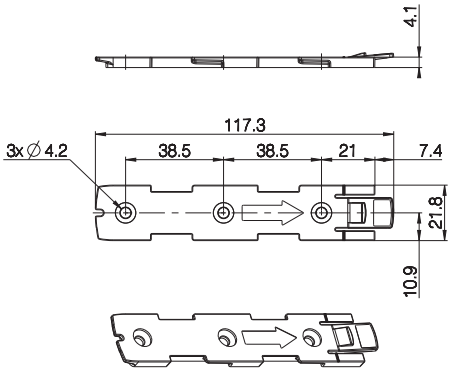

Drawing No.: 1015W4001

Mounting bracket (frame flat) w/M4 nuts - article No. 1015W9009:

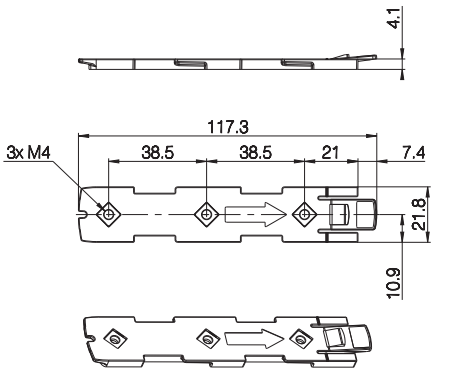

Drawing No.: 1015W4009

CO65 - mounted on frame:

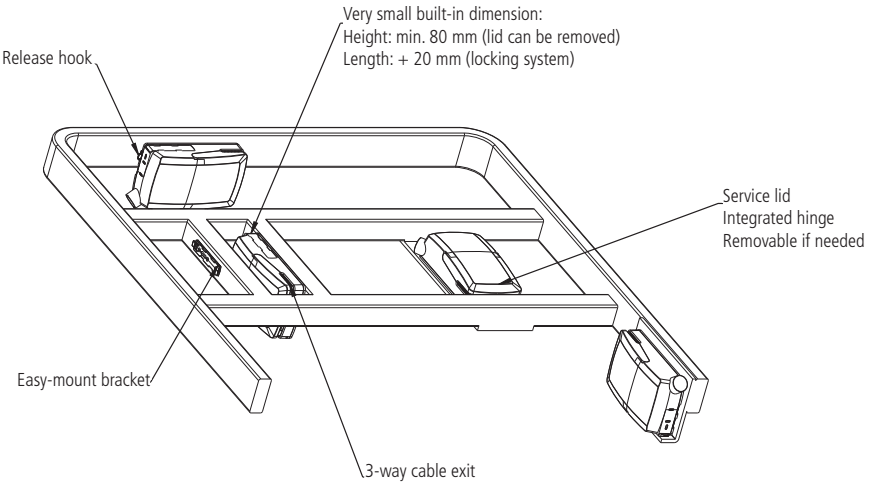

Mounting instructions (Example CO65 with LA40)

When mounting the control box onto the actuator (1)

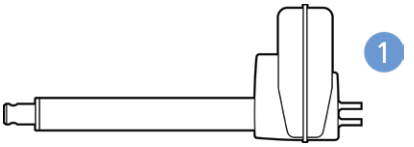

Simply slide on the bracket until you hear a clear click (2)

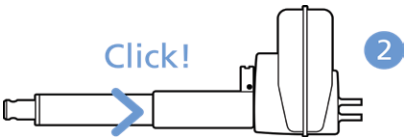

Slide on the control box until you hear a click and the box is mounted (3)

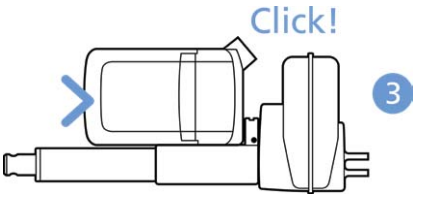

It is recommended that the CO65 is mounted in a position that allows water to escape.

Recommended torque: 0.6 Nm +/-0.1

The bracket can be mounted to the bed frame or any other application by following one of the following mounting procedures:

1) M6 nut to be placed in bracket and fixed with M6 bolt from the rear side.
2) M5 machine screw with flat washer to be fixed through bracket with nut on the rear side.
3) Self-tapping screw to be placed through bracket and onto the frame.

Mounting of cables and cable lock:

CO65 has a uniquely designed cable lid. The lid also works as an integrated cable lock when closed.

1) Mount cable plugs in control box
2) Close lid until lock snaps into place (see arrows)

To allow free access to the cables, the lid has a rest position when completely opened.
It is possible to remove the lid by lifting it a few degrees and pulling it away from the housing under tight mounting conditions.

See illustrations:

1

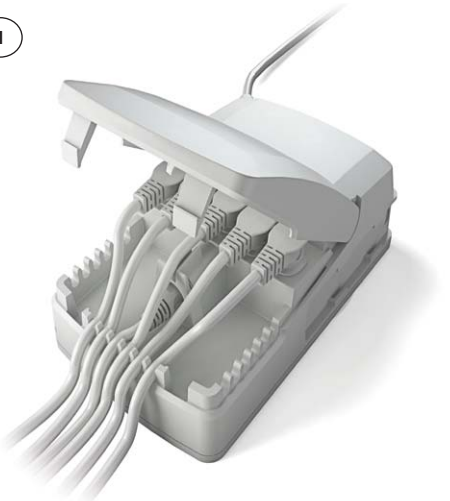

Cable management:

2

Recommendations

- To avoid unintended activation of actuators if hand control cables short-circuit, LINAK recommends to use an OpenBus system (CO65).
- If there is a risk that the system is overloaded and therefore shuts down thermally, LINAK recommends to use quick release actuators. These will allow functions to be lowered manually in case of a CO65 malfunction due to misuse/abuse.
- If the customer has other essential performance than "no unintended movement", he must consider this in his own risk analysis. LINAK disclaims any liability.
- If the actuator or the control cable is removed from the control box, the cable lock must be applied. To ensure movement in this case, LINAK recommends to use quick release actuators in the application.
- To avoid cables from being damaged by pulling, LINAK recommends to make safe cabling. If movement is an essential performance, LINAK recommends to apply quick release actuators, for example, to ensure movement.
- To avoid thermal protection from being activated, do not exceed load specifications. If movement is an essential performance, LINAK recommends to apply quick release actuators, for example, to ensure movement.
- Sales must request a review of the products according to current cut-off limits.
- Push plugs fully into correct sockets. Make sure that the plugs are completely inserted.
- Mount control box lid and close lid until locked in place.

Motor cable
Always use 6-wire cables.
Please note that angled motor cable plugs are required for connection to the control box.

Warnings

- Use EPR or ensure that the user takes care not to squeeze the mains cable.
- Always check correct assembly after mounting and service to ensure that the cable lock is mounted. (Connectors are usually removed during cleaning)
- Always use approved chemicals with the housing as the plastic may show corrosion caused by some chemicals. As a result water may accumulate/ gather in housing.
- Take special precautions concerning 3rd party interfacing. Please contact LINAK for further information.
- Make a review of all product specifications before system set-up if the current cut-off limit is higher than the maximum allowed current cut-off for the actuator.
- To avoid cable interruption and actuator defects make a proper cable installation and inspect regularly for wear and damage. Defective parts must be replaced.
- After service inspection, the application must be tested for correct functionality before it is put into operation to avoid actuator plugs being mixed during service.
  Operators must not be inside entrapment area.
- To avoid electrical failure or system disturbance inspect regularly for wear and damage. Defective parts must be replaced.
- Make a proper cable installation to avoid short-circuit cables for handset/controls.
  Regular inspection must be made for wear and damage. Defective parts must be replaced.
- Do not mount the actuator with the spindle facing downwards to avoid that the actuator slips off the bracket with mounted control box. The bracket can come loose when exposed to shock or hard vibratio, for instance when passing doorsteps. Regular inspection must be made to ensure proper fixation of control box and bracket on actuator.

16. CO71 (MEDLINE® CARELINE®)

The LINAK control box CO71 offers a consolidated range of unprecedented features – all utilising standardised technology, interfaces and compatibility.

The CO71 for LINAK actuators is intended for the control of, for example, hospital bed movement.

Equipped with 350W SMPS, excellent and well thought-out cable management as well as multiple easy mounting options, this control box opens up a wide range of application possibilities for the provident hospital and care products manufacturer.

Features and Options:

- Duty cycle: 10 % - 2/18 min. on/off continuous use.
  Maximum power is 350 W for 80 seconds and 175 W for 40 seconds at 25 °C.

LED indicator

CO71 is equipped with a green LED for indication of mains power connected.

When the CO71 is connected to mains, the LED is green. Connected only to battery, the LED is off.

Connected to MAINS	
LED colour	**Indication of operation**
Green	**On mains, <u>not</u> activated by hand or foot control.** The system is working ok and is ready for normal operation.
Yellow	**On mains, <u>not</u> activated by hand or foot control.** The system is defective and should not be operated.
Yellow	**On mains, activated by hand or foot control.** The system is working.

Not connected to mains but with BATTERY back-up	
LED colour	**Indication of operation**
Orange	**On battery, activated by hand or foot control.** The system is working.
No LED	**On battery, <u>not</u> activated by hand or foot control.** or CO71 not connected to mains.

Acoustic signal functionality:

The buzzer will make a warning, when a button on the hand control is pressed, and the battery capacity is low.

The buzzer can also be activated by the control box to signal other conditions. This must be specified in the control box software.

Mounting bracket (frame flat) - article No. 1015W1001:

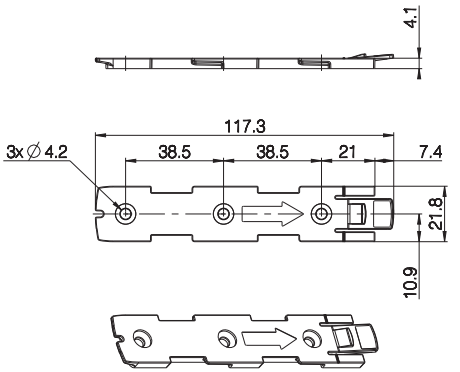

Drawing No.: 1015W4001

Mounting bracket (frame flat) w/M4 nuts - article No. 1015W9009:

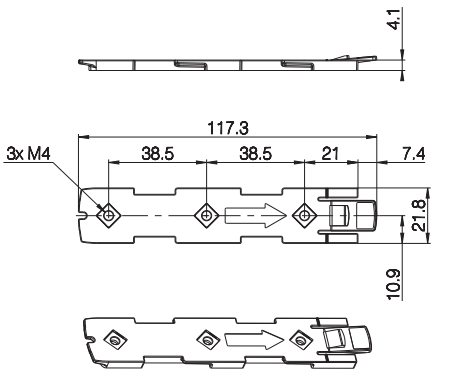

Drawing No.: 1015W4009

CO71 - mounted on frame:

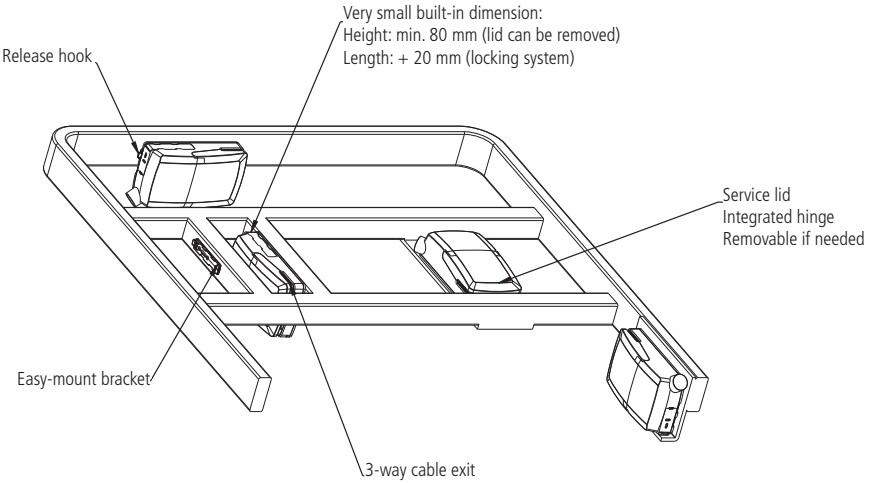

Mounting instructions (Example CO71 with LA40)

When mounting the control box onto the actuator (1)

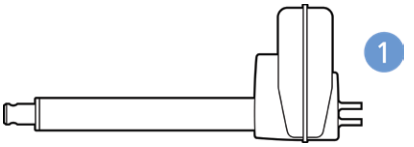

Simply slide on the bracket until you hear a clear click (2)

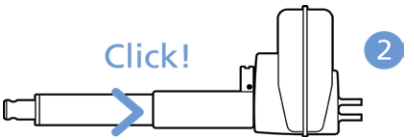

Slide on the control box until you hear a click and the box is mounted (3)

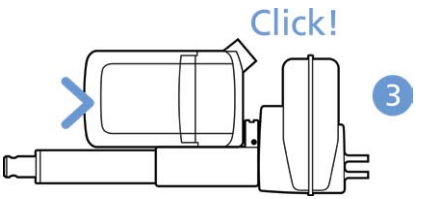

It is recommended that the CO71 is mounted in a position that allows water to escape.

Recommended torque: 0.6 Nm +/-0.1

The bracket can be mounted to the bed frame or any other application by following one of the following mounting procedures:

1) M6 nut to be placed in bracket and fixed with M6 bolt from the rear side.
2) M5 machine screw with flat washer to be fixed through bracket with nut on the rear side.
3) Self-tapping screw to be placed through bracket and onto the frame.

Mounting of cables and cable lock:

CO71 has a uniquely designed cable lid. The lid also works as an integrated cable lock when closed.

1) Mount cable plugs in control box
2) Close lid until lock snaps into place (see arrows)

To allow free access to the cables, the lid has a rest position when completely opened.
It is possible to remove the lid by lifting it a few degrees and pulling it away from the housing under tight mounting conditions.

See illustrations:

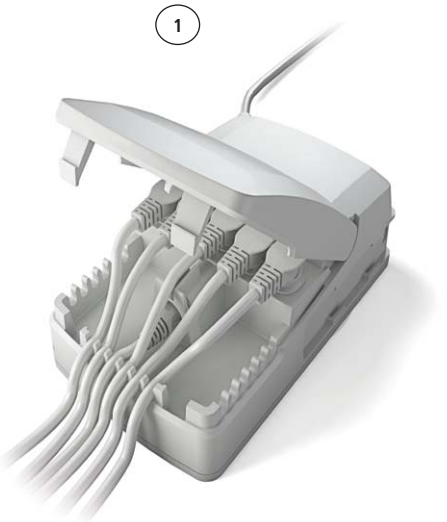

Cable management:

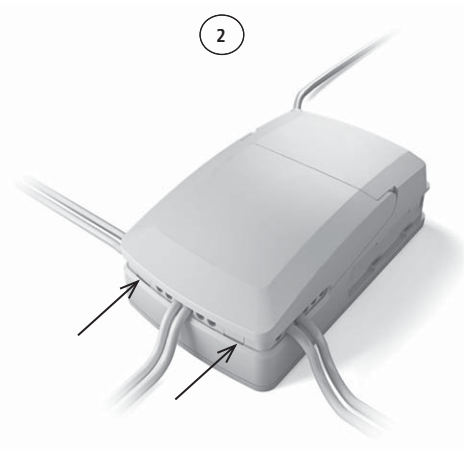

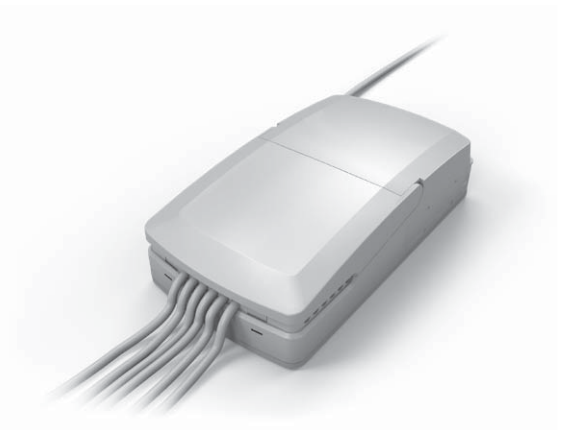

Recommendations

- To avoid unintended activation of actuators if hand control cables short-circuit, LINAK recommends to use an OpenBus™ system (CO71).
- If there is a risk that the system is overloaded and therefore shuts down thermally, LINAK recommends to use quick release actuators. These will allow functions to be lowered manually in case of a CO71 malfunction due to misuse/abuse.
- If the customer has other essential performance than "*no unintended movement*", he must consider this in his own risk analysis. LINAK disclaims any liability.
- If the actuator or the control cable is removed from the control box, the cable lock must be applied. To ensure movement in this case, LINAK recommends to use quick release actuators in the application.
- To avoid cables from being damaged by pulling, LINAK recommends to make safe cabling. If movement is an essential performance, LINAK recommends to apply quick release actuators, for example, to ensure movement.
- To avoid thermal protection from being activated, do not exceed load specifications. If movement is an essential performance, LINAK recommends to apply quick release actuators, for example, to ensure movement.
- Sales must request a review of the products according to current cut-off limits.
- Push plugs fully into correct sockets and make sure that the plugs are completely inserted.
- Mount control box lid and close lid until locked in place.

Motor cable
Always use 6-wire cables.
Please note that angled motor cable plugs are required for connection to the control box.

Warnings

- Use EPR or ensure that the user takes care not to squeeze the mains cable.
- Always check correct assembly after mounting and service to ensure that the cable lock is mounted. (Connectors are usually removed during cleaning)
- Always use approved chemicals with the housing as the plastic may show corrosion caused by some chemicals. As a result water may accumulate/gather in housing.
- Take special precautions concerning 3rd party interfacing. Please contact LINAK for further information.
- Make a review of all product specifications before system set-up if the current cut-off limit is higher than the maximum allowed current cut-off for the actuator.
- To avoid cable interruption and actuator defects make a proper cable installation and inspect regularly for wear and damage. Defective parts must be replaced.
- After service inspection, the application must be tested for correct functionality before it is put into operation to avoid actuator plugs being mixed during service. Operators must not be inside entrapment area.
- To avoid electrical failure or system disturbance inspect regularly for wear and damage. Defective parts must be replaced.
- Make a proper cable installation to avoid short-circuit cables for hand control/controls. Regular inspection must be made for wear and damage. Defective parts must be replaced.
- Loss of mains: If the power supply is switched off for a short time (between 1 and approx. 1.5 seconds), the control box will only start up again if a key is pressed. This is only relevant for OpenBus™ systems that run continually
- Do not mount the actuator with the spindle facing downwards to avoid that the actuator slips off the bracket with mounted control box. The bracket can come loose when exposed to shock or hard vibration, for instance when passing doorsteps. Regular inspection must be made to ensure proper fixation of control box and bracket on actuator.

17. OPS - OpenBus Power Supply (MEDLINE® CARELINE®)

The LINAK OpenBus Power Supply (OPS) is intended to control up to three heat pads.
The OPS is equipped with 120 W constant power and comes as IPX6 Washable DURA™.

The OPS offers flexible system combinations and can be used as a stand-alone system or as add-on to the existing LINAK CO control box solution as CO-Link™.

Usage:

- Duty cycle: 100%
- Operation temperature: +5 °C to + 40 °C
- Storage temperature: -10 °C to + 50 °C
- Relative humidity: 20% to 80% - non-condensing
- Atmospheric pressure: 700 to 1060 hPa
- Height above sea level: Max. 3000 meters
- Flammability rating: UL94 V2
- Latex free: Yes
- Approvals: IEC 60601-1
  ANSI/AAMI ES60601
  CSA CAN/CSA-C22.2 NO. 60601
  IEC 60601-1-6
  IEC 60601-1-2

Mounting bracket (frame flat)
- article No. 1015W1001:

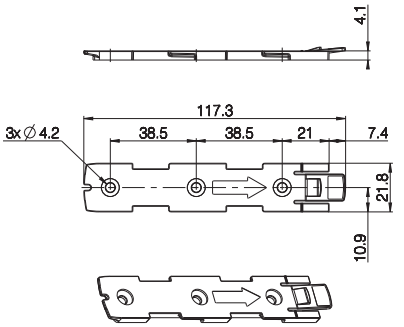

Drawing No.: 1015W4001

Mounting bracket (frame flat) w/M4 nuts
- article No. 1015W9009:

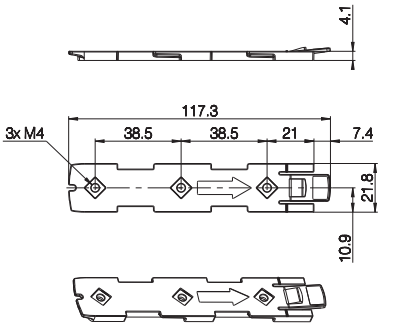

Drawing No.: 1015W4009

OPS - mounted on frame:

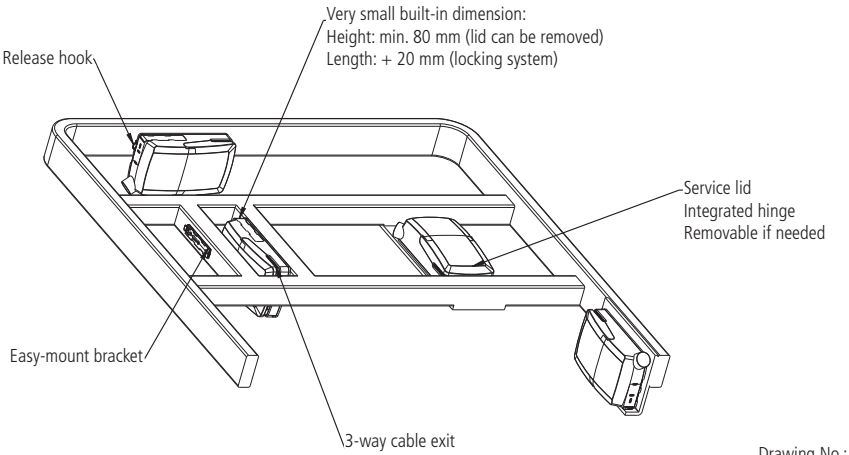

Drawing No.: 1013W4008

Mounting of cables and cable lock:

The OPS has a uniquely designed cable lid. The lid also works as an integrated cable lock when closed.

1) Mount cable plugs in the OPS
2) Close lid until lock snaps into place (see arrows)

To allow free cable access, the lid has a rest position when completely opened.
It is possible to remove the lid by lifting it a few degrees and pulling it away from the housing under tight mounting conditions.

See illustrations:

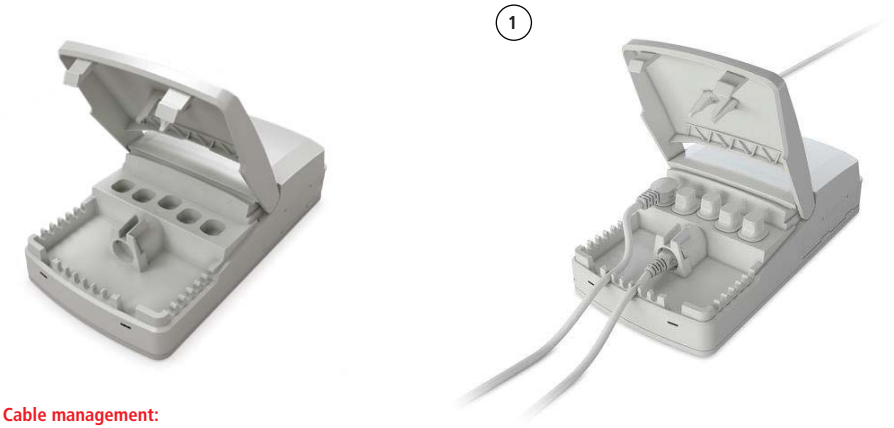

Cable management:

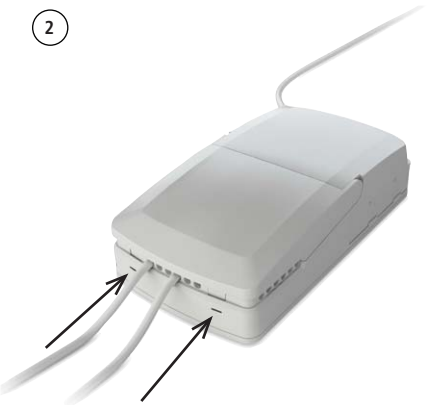

LED indicator

The OPS is equipped with LED indication. When mains power is connected, the LED turns green.
The LED turns yellow for as long as the pressure lasts.

Connected to MAINS	
LED colour	**Indication of operation**
Green	**On mains** The system is working ok and is ready for normal operation.
Yellow	**On mains, activated by hand control.** The system is working.

Recommendations

- LINAK recommends safe cabling to avoid cable damage caused by pulling.
- A product review as to current cut-off limits must be requested by the sales department.
- Always use matching cable plug for the respective product.
- Push plugs fully into correct sockets and make sure they are firmly inserted.
- Mount the OPS box lid and close lid until locked in place.

Heat pad cable
Always use 6-wire cables.
Please note that angled heat pad cable plugs are required for connection to the control box.
Order no. 0965361-A (1100 mm straight cable).

Warnings

- Use EPR or ensure that the user takes care not to squeeze the mains cable.
- Always check correct assembly after mounting and service to ensure that the cable lock is mounted. (Connectors are usually removed during cleaning)
- Take special precautions concerning 3rd party interfacing. Please contact LINAK for further information.
- Make a review of all product specifications before system set-up if the OPS box current cut-off limit is higher than the maximum allowed current heat pad cut-off.
- Make a proper cable installation to avoid cable interruption and inspect regularly for wear and damage. Replace defective parts.
- Make regular inspections for wear and damage to avoid electrical failure or system disturbance and replace defective parts.
- Make a proper cable installation to avoid short-circuit of hand control cables. Make regular inspection for wear and damage and replace defective parts.

18. PJ2 (MEDLINE® CARELINE®)

The LINAK Power Junction Box PJ2 offers two extra outputs for the COXX control box series. Standardised technology, interfaces and compatibility like the new COXX control boxes.

The PJ2 for LINAK actuators is intended for the control of, for instance, hospital bed and surgery tables movement.

Usage

- Operating temperature: +5 °C to +40 °C
- Storage temperature: -10 °C to +50 °C
- Relative humidity: 20% to 80% - non-condensing
- Atmospheric pressure: 700 to 1060 hPa (3000 m)
- Meters above sea level: Max 2000 meters
- Approvals (pending): IEC60601-1, ANSI/AAMI ES60601-1, CSA CAN/CSA-C22.2 NO. 60601-1

Mounting brackets

For mounting with LA40 (Article No.: 1015W1002)

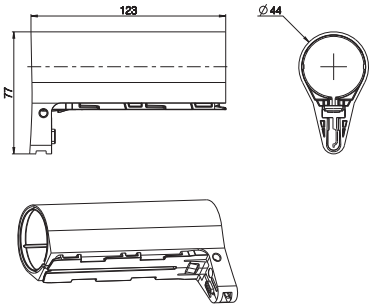

Drawing No.: 1015W4002

For mounting with LA31 (Article No.: 1015W1004):

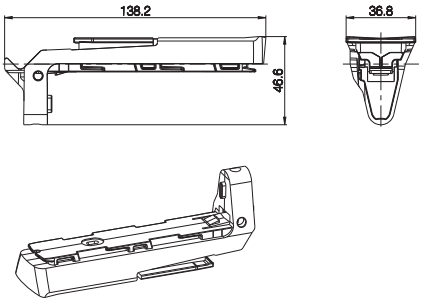

Drawing No.: 1015W1004

For mounting with LA27 (Article No.: 1015W9003):

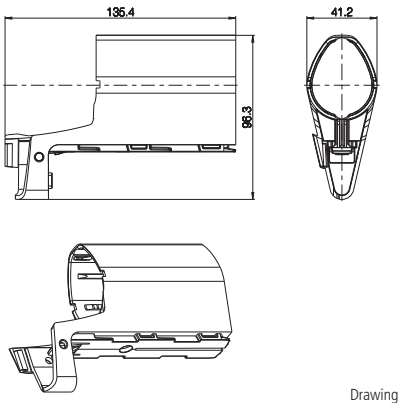

Drawing No: 1015W4003

The adapter 1015W9003 includes a screw that is halfway mounted, thus everything as one part.

Screw head torx size: T15
Screw torque: 1.2 ± 0.2 Nm

Mounting bracket (frame flat) - article No. 1015W1001:

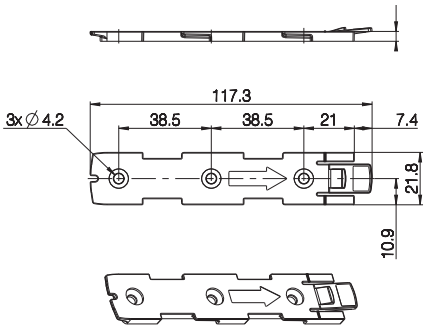

Drawing No.: 1015W4001

Mounting bracket (frame flat) w/M4 nuts - article No. 1015W9009:

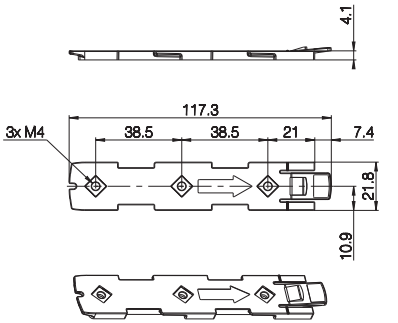

Drawing No.: 1015W1009

It is recommended that the PJ2 is mounted in a position that allows water to escape.

Recommended torque: 0.6 Nm +/- 0.1

The bracket can be mounted to the bed frame or any other application by following one of the following mounting procedures:

- M5 machine screw with flat washer to be fixed through bracket with nut on the rear side
- Self-tapping screw to be placed through bracket and onto the frame

Mounted on frame

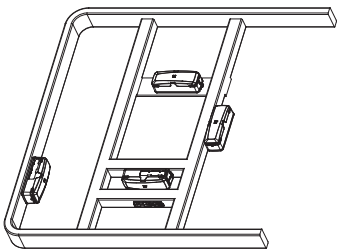

Drawing No.: 1038W4003

Mounting instructions (Example PJ2 with LA40)

When mounting the control box onto the actuator (1)

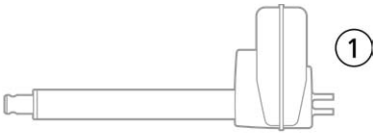

Simply slide on the bracket until you hear a clear click (2)

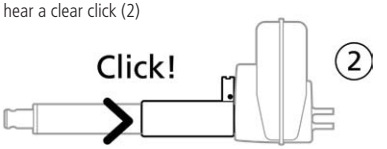

Slide on the control box until you hear a click and the box is mounted (3)

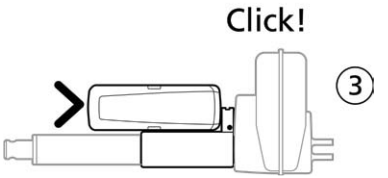

Cables
PJ2 has a uniquely designed cable lid. The lid also works as an integrated cable lock when closed.

1) Mount cable plugs in control box
2) Close lid until lock snaps into place (see arrows)

To allow free access to the cables, the lid has to be removed. It is possible to remove the lid by means of a screwdriver or similar, lifting the lid in each side and pulling it away from the housing.

Recommendations

- Always use 6-wire cables for actuators
- Always use 4-wire cables for PCP accessories
- Please note that angled cable plugs are required for connection to the PJ2

Recommendations

- If there is a risk that the system is overloaded and therefore shuts down thermally, LINAK recommends using quick release actuators. These will allow functions to be lowered manually in case of a PJ2 malfunction due to misuse/abuse.
- If the customer has other essential performance than "*no unintended movement*", he must consider this in his own risk analysis. LINAK disclaims any liability.
- If the actuator or the control cable is removed from the control box, the cable lock must be applied. To ensure movement in this case, LINAK recommends using quick release actuators in the application.
- To avoid cables from being damaged by pulling, LINAK recommends making safe cabling. If movement is an essential performance, LINAK recommends applying quick release actuators, for example, to ensure movement.
- To avoid activation of thermal protection, do not exceed load specifications. If movement is an essential performance, LINAK recommends applying quick release actuators, for example, to ensure movement.
- Sales must request a review of the products according to current cut-off limits.
- Push plugs fully into correct sockets and make sure that the plugs are completely inserted.
- Mount control box lid and close lid until locked in place.

Warnings:

- Use EPR or ensure that the user takes care not to squeeze the mains cable.
- Always check correct assembly after mounting and service to ensure that the cable lock is mounted. (Connectors are usually removed during cleaning)
- Always use approved chemicals with the housing as the plastic may show corrosion caused by some chemicals. As a result water may accumulate/gather in housing.
- Take special precautions concerning 3rd party interfacing. Please contact LINAK for further information.
- Make a review of all product specifications before system set-up if the current cut-off limit is higher than the maximum allowed current cut-off for the actuator.
- To avoid cable interruption and actuator defects make a proper cable installation and inspect regularly for wear and damage. Defective parts must be replaced.
- After service inspection, the application must be tested for correct functionality before it is put into operation to avoid actuator plugs being mixed during service.
  Operators must not be inside entrapment area.
- To avoid electrical failure or system disturbance inspect regularly for wear and damage. Defective parts must be replaced.
- Make a proper cable installation to avoid short-circuit cables for handset/controls.
  Regular inspection must be made for wear and damage. Defective parts must be replaced.
- Do not mount the actuator with the spindle facing downwards to avoid that the actuator slips off the bracket with the mounted PJ2.
  The bracket can come loose when exposed to shock or hard vibration, for instance when passing doorsteps.
  Regular inspection must be made to ensure proper fixation of control box and bracket on actuator.
- PJ2 is ONLY to be used with PCP 2.0 control boxes.

6. Information on specific controls

1. ACC (MEDLINE® CARELINE®)

The ACC (Attendant Control Compact) is fitted to advanced hospital and patient care beds for use where patient positioning must be carefully controlled by medical staff.

2. ACK (MEDLINE® CARELINE®)

With the OpenBus™ system it is possible to use ACK membrane front covers as attendant control or hand controls integrated in the bed side rails.

There are two different variants of ACK: ACK1 and ACK3.
The ACK1 is a single membrane front cover, whereas the ACK3 comes with two membrane front covers, typically used on an inside side rail and an outside side rail.

Features and Options:
- Straight cables: 1250 mm, 1800 mm or 2500 mm
- The standard ACK colour is grey (RAL 7035)

Usage:
- Operation temperature: +5 °C to +40 °C
- Storage temperature: -10 °C to +50 °C
- Compatibility: Compatible with LINAK control boxes. Please contact LINAK
- Relative humidity: 20% to 80% - non-condensing
- Atmospheric pressure: 700 to 1060 hPa (3000 m)
- Meters above sea level: Max. 3000 meters
- Approvals: IEC60601-1
  ANSI/AAMI ES60601-1
  CAN/CSA-22.2 No 60601-1

Generel information
For LINAK standard ACKs, the following is applicable:
- Adhesive for the standard ACK is 3M 7955
- For information re. suitable and unsuitable surfaces, please see 3M's webpage
- Standard recommandation for curing time is 72 hours
- The customer is responsible for correct mounting on suitable surfaces

Recommendations

- The customer responsibility includes making a proper design of the cable strain relief inside the side rail panel.
- The customer should consider the existence of vibrations when defining and specifying the housing, i.e. we recommend the customer to carry out a vibration test on the final product.
- The customer must ensure a proper IP rating/test
- The customer must ensure proper drop testing according to IEC60601-2-52 §201.15.3.4.1. In this clause there is an additional reference to IEC60601-2-31.
- The customer is responsible for correct mounting of the PCBA. Among other things, it means
  - ensuring proper and safe mounting of the PCBA into e.g. the side rail
  - ensuring proper and correct mounting between key pad connection tails and the ACK PCBA
  - ensuring proper and correct mounting of the key pad
  - the customer should consider proper precautions against ESD (Electrostatic discharge).
- When handling ESDS (Electrostatic Discharge Sensitive) devices – e.g. during transport, storage, handling, production or mounting in an application - exposure to harmful ESD must be avoided.
- Consider proper creepage and clearance measures to fulfil IEC 60601. With One MOPP (One Means Of Patient Protection / Secondary side of the actuator system)
- It is not recommended to dismount the membrane front cover after mounting as this may cause damage.

3. ACL (MEDLINE® CARELINE®)

The ACL (Attendant Control Lock) box is a one turn button box for various applications where the patient positioning must be carefully controlled by the medical staff.

The ACL disconnects all functions on hand control either by means of turn button or turn key.

The aim is to minimise the risk of unintended activation of an actuator and hereby minimising the risk of *"squeezing"*. Due to ESF (Electronic Safety Function), the ACL / FS has to be operated using a certain technique in order to activate the switch.
It is necessary to *"double click"* to start the system :

- Foot pressure must be applied for a short period of time, from 30 ms to 250 ms.
- Then briefly lift the foot from (max. 40 ms to max. 550 ms pause), followed by a normal activation.
- After an activation attempt without success, a pause of min. 1. sec. is required before a new attempt.

4. ACM (MEDLINE® CARELINE®)

The ACM (Mini Attendant Control) box is fitted to hospital and care beds for use where patient positioning must be carefully controlled by the medical staff.

The compact design and simple operation makes it easy for the nursing staff to retain direct control over critical positioning functions whilst giving the patient a limited degree of adjustment.

The ACM must be mounted correctly on a flat surface to ensure IP degree. A short circuit in the cable can cause movement. To possibly avoid this risk, choose a OpenBus™ system.

5. ACO (MEDLINE® CARELINE®)

The Attendant Control OpenBus™ (ACO) is a cost optimised and compact unit with up to 21 buttons that can be used as hand control keys or lock-outs. The lock-out function can be made visable by using yellow LEDs.

Usage:

- Operation temperature: +5 °C to +40 °C
- Storage temperature: -10°C to +50 °C
- Relative humidity: 20% to 80% non-condensing
- Atmospheric pressure: 700 to 1060 hPa (3000 m)
- Flammability rating: V2
- Approvals: IEC 60601-1
  IEC 60601-1-6
  ANSI/AAMI ES60601-1
  CAN/CSA-C22.2 NO. 60601-1

In order to comply with the norm, the ACO must hang vertically from its hook during the washing process.

Recommendations

- Always use Locking ring and cables with O-rings.
- Locking ring and cables with O-rings must be fitted to ensure IP degree.
- If other front covers than standards are requested, the front cover guidelines should be consulted.

N.B.

- Cables are inclusive an O-ring.

6. ACOM (MEDLINE® CARELINE®)

ACOM is the obvious control for hospital and nursing home beds where patient positioning needs careful control by medical staff. ACOM is an OpenBus™ control.

Usage:

- Operation temperature: +5 °C to + 40 °C
- Storage temperature: -10 °C to + 50 °C
- Relative humidity: 20% to 80% - non-condensing
- Atmospheric pressure: 700 to 1060 hPa (3000 m)
- Height above sea level: Max. 3000 meters
- Approvals: IEC 60601-1 Edition 3.1 (2012),
  IEC 60601-1-6:2010 + A1:2013
- Compatibility: Compatible with LINAK OpenBus™ control boxes, CO-generation

Recommendations

- Clean the hand control regularly to ensure good hygiene standards.
- When a defective ACOM is replaced, check that the new ACOM has exactly the same specification and functionality.
- Do not submerge the hand control in water.
- Unless otherwise specified or agreed with LINAK, the hand control is only intended to be used for LINAK systems.
- When changing hand controls for OpenBus™ systems, the power must be switched off.
- It is recommended to check the hand control and cable for damage and holes caused by violent handling before washing the application or at least once a year.
- It is recommended to have a parking place for the hand control on the application where the customer ensures that the hand control does not fall off.

Warnings:

- Do not sit or lie on the hand control as this can cause unintended movement of the application.

7. ACT (MEDLINE® CARELINE®)

The Attendant Control Touch (ACT) for the hospital and care segment is a control panel with an intuitive, graphical three-level user interface:

1. Care mode for caregivers and relatives (bed operation)
2. Extended care mode for caregivers (extended bed operation, features, settings)
3. Service mode for technicians (advanced settings)

The ACT combines several operations and functionalities in one unit, thereby eliminating the need for several hand controls on the individual bed. In addition, the ACT is equipped with a large screen, giving the user a great overview of all the functions.

Software, graphics and front covers can be customised according to customer requirements.
The ACT supports the LINAK OpenBus™ system offering a high level of customisation.

Usage:

- Operation temperature: +5 °C to + 40 °C
- Storage temperature: -10 °C to + 50 °C
- Relative humidity: 20% to 80% - non-condensing
- Atmospheric pressure: 700 to 1060 hPa (3000 m)
- Height above sea level: Max. 3000 meters
- Approvals: IEC60601-1, ANSI/AAMI ES60601-1, CAN/CSA-22.2 No 60601-1
- Compatibility: Compatible with all OpenBus™ control boxes.
  Please contact LINAK.

Technical recommendations:

- Always use the cable locking mechanism and an O ring.
- Prepare a system/bit overview as the unit may conflict with other OpenBus™ accessories such as HB, ACP etc.
- Avoid large metal parts in the vicinity of the RFID reader (approx. 50 mm).
- When designing the application, be aware of the ACT position in the application to avoid impact to the front glass.
- Use a LINAK magnet or a magnet with a minimum strength of 15 mT measured at a distance of 10 mm.
- Do not bend the cable more than the minimum bending radius of 10 mm when mounting the ACT in side rails or similar where the cable is repeatedly bent.
- Before first start-up, be aware not to place any magnetic devices or RFID tags in front of the company logo until the ACT goes into sleep mode to avoid calibration disturbance.
- Be aware that magnetic jewellery or magnets in general can activate care mode and lead to unintended use. LINAK recommends to use RFID tags.

Warnings:

- The application manufacturer must write an end-user manual based on the LINAK user manual which also includes relevant warnings, information on how to carry out regular inspection and a functionality description. End-users must be trained in all functions.
- Regular system inspections for wear or damage must be made.
- Mains and battery power must be disconnected before servicing.
- Using the magnet key cannot wake up a green system or a system running on battery. The system will wake up when activating a key and the magnet key can then unlock the system.

Mounting instructions:

The ACT must be mounted on the bed, for example on the footboard - illustration of the fitting is shown below.

The ACT must be supported on the back of the housing when fastening it to the mounting plate and not only supported on the edge of the housing front side.

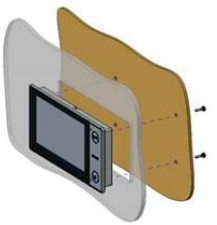

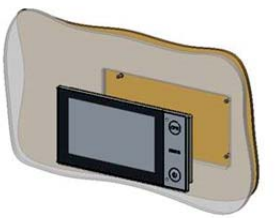

When mounting:

- LINAK recommends to use a self-tapping screw, BN84229, 50x12.
- Please observe that the 1.5 [Nm] screw torque limit is not exceeded.
- Please be aware that the screw holes in the ACT are only 11 mm deep. Use appropriate screws.
- Please ensure that the mounting leaves space (2 mm) between the ACT and the back of the housing. This to avoid that water is trapped. The space is only necessary where the membrane is placed on the ACT.
- If upward cable exit is used, mount a ferrite core to the cable (see section "*Ferrite core*").

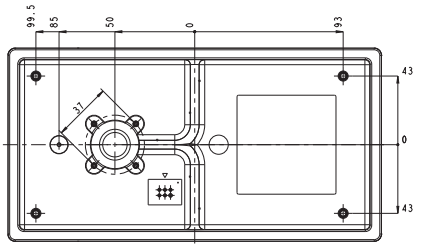

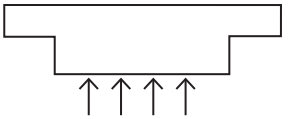

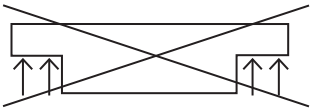

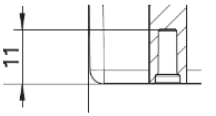

The recommended screw type is self-tapping BN84229 50 x 12.

A grounding cable (article no.: 1009W7004) will be supplied together with the ACT and must be connected to the OpenBus™ system and the other end to the bed frame to decouple electrical fields.

Ferrite core :
If upward cable exit is used, a ferrite core needs to be added as close as possible to the ACT.

Ferrite core specification:
At the mentioned frequencies, the impedance must be as stated in the table:

Frequency (MHz)	10	25	100	250
Impedance (Ω)	95	156	260	270

Ferrite core graphic characteristics:

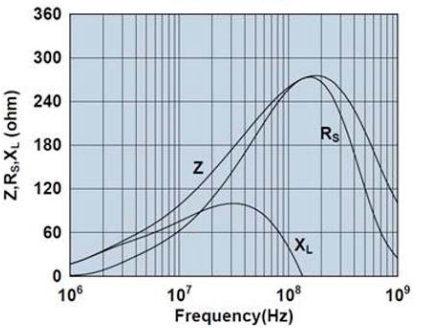

Impedance, reactance, resistance vs. frequency

8. DPH Medical (MEDLINE® CARELINE®)

The DPH is a small two button panel for adjustment of different functions. The DPH fits into an MJB with a modular plug and thereby compatible with OpenBus™.

Usage:

- Ambient temperature: +5 °C to +40 °C
- DPH is compatible with the OpenBox control boxes via Modular Junction Boxes MJB5061101-00 as follows:
  Control Boxes: CB6S OBL, CB6S OBM, CB6S OBF, CB16 OBL, CB16 OBF, CB20
  Modular Junction Box: MJB5061101-00
- DPH1K10-210007 combined with MJB5061101-00 creates the OpenBus™ codes:
  Up Arrow: H0
  Down Arrow: H1
- Wrong mounting is not an issue with the MJB5061101-00 and the modular jack plug of the DPH cable.
  The plug will only fit into the correct ports of the MJB.

9. FPP (MEDLINE® CARELINE®)

The FPP is for use with a variety of different bed types and is therefore compatible with control boxes that use an OpenBus™ interface.

Usage:

- Operation temperature: +5 °C to +40 °C
- Storage temperature: -10°C to +50 °C
- Relative humidity: 20% to 80% non-condensing
- Atmospheric pressure: 700 to 1060 hPa (3000 m)
- Flammability rating: V2
- Approvals: IEC 60601-1:2005 (Edition 3)
  ANSI/AAMI ES60601-1:2005
  CAN/CSA-C22.2 No. 60601-1:2008

Mounting instructions:

The FPP is intended for mounting at the head end of a bed in order for the patient to be able to see and operate it with an easy push of a button. After use, it can easily be moved a short distance aside.

The FPP comes with a cable attached. The bottom part of the arm is prepared for mounting inside a bracket - fitting the diameter of the arm.

The bracket is not supplied by LINAK but must be designed and manufactured by the customer. It must fit the dimensions shown. A suggestion to a design and dimensions of the fixation parts are shown below:

Dimensions Illlustration:

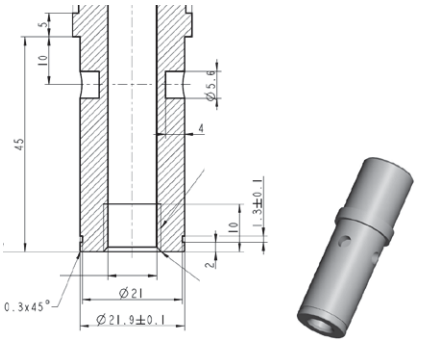

Possible bracket design.

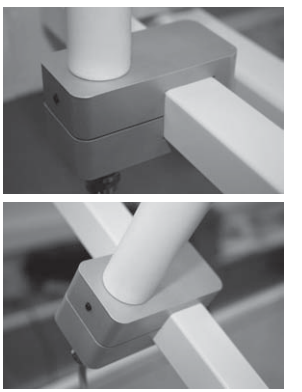

The FPP must be mounted in such a manner that it is secured against rotation. For this purpose the bracket end of the arm has 4 drilled holes - one of the 4 holes must be secured via the bracket with a slotted set screw with cone point (pointed screw).

Otherwise it may slide away from the user when operated.

Recommendations:

- The application manufacturer must ensure a proper installation of the FPP in the application which is convenient for the end user.
- To ensure proper activation, the lock above the housing must be properly locked by turning it clockwise.
- The application manufacturer must use the correct torque for the slotted set screw of the bracket to ensure a stable positioning of the FPP.
- The application manufacturer must consider the bracket position carefully. If the FPP is mounted on a moveable part, it will move and might touch the patient or parts of the application. If, however, mounted on a fixed part, the FPP might not be within the reach of the patient.
- The end user must not apply a torque to the FPP housing of more than 8 Nm between the flexible arm and the panel.
- The end user must not bend the FPP arm to a radius smaller than 105 mm.
- The FPP must never be used as a handle for moving the application.
- The end user must be informed that the FPP must not be used for other purposes (such as table, handle) than intended.
- The end user must take care that the FPP does not touch items or persons when the application is moved.

Warnings:

- The FPP must be placed readily accessible for the patient. Never let the FPP hand out of the bed.
- Never use the FPP as a handle.
- Do not use sharp devices to activate buttons on the FPP.
- Never use the FPP as support device. The FPP must not be used as table or notepad, nor can it be used to hang objects on.

As illustrated in the pictures below the panel itself can be moved and angled in a number of positions. The arm can also be bent to move it closer or move it further away from the user.

The lock function

Between the arm and the panel there is a lock/unlock function, (a hose type connection).
It enables the user to turn the panel into a preferred position.

Locking of the panel:

Turn the panel to a preferred position. With one hand on the panel turn the hose clockwise with the other hand.
The panel is fully locked when it cannot be turned.

Unlocking of the panel:

With one hand on the panel, turn the hose counterclockwise with the other hand until the panel can be moved freely.

10. FS (MEDLINE® CARELINE® TECHLINE®)

The Foot Switch is a modular system, developed for use together with some of LINAK control boxes.
The LINAK Foot Switch is designed for control of physiotherapeutic beds, hospital beds, dentist chairs, gynaecologist chairs, computer workstations, and working desks etc. It can also be used as a "*stand alone*" item for industrial applications.

Footswitch

Consist of: FS (a pedal unit) and FSE (electronics unit), which can activate one or more actuators. The module system can max. consist of two pedal units, a FSR (right pedal), a FSL (left pedal), and one electronics box.

11. FS3 (MEDLINE® CARELINE®)

Floor adaptor

Bed adaptor

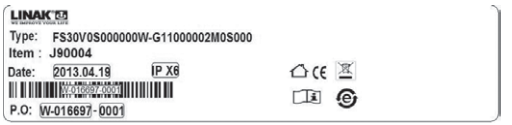

The Foot Switch FS3 is an ergonomically designed modular system, developed for use together with LINAK control boxes and IC actuators with Intelligent Control. The LINAK® Foot Switch is designed for easy and improved control of e.g. hospital beds and couches and has been developed in cooperation with end users. The Foot Switch is therefore very user- and cleaning-friendly and has an aesthetic design.

The FS3 is a robust foot control which is available both as a single and double version as well as a floor and bed model. When mounting the double version on a bed, the Foot Switch will be placed on each side of the bed frame to enable easy operation from both sides. It is also possible to have the double floor version for medical applications, e.g. couches, in order to achieve the opportunity to control different motions of the application. The FS3 is furthermore available in an analogue version and a digital OpenBus™ version.

Usage:

- Usage temperature: + 5 °C to + 40 °C
- Storage temperature: -10 °C to + 50 °C
- Relative humidity: 20% to 80% - non-condensing
- Atmospheric pressure: 700 to 1060 hPa (3000 m)
- Height above sea level: Max. 3000 meters
- Compatibility: Compatible with LINAK analogue and OpenBus™ control boxes. Please contact LINAK.
- Approvals: IEC60601-1
  ANSI / AAMI ES60601-1
  CAN / CSA-22.2 No 60601-1

Mounting of the FS3 bed model:

To mount the FS3 bed model, you have to use the bolt and the nut which have already been fitted to the FS3 bed model (see picture below).

Bolt and nut for mounting

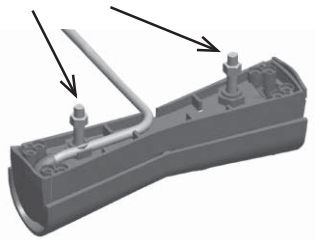

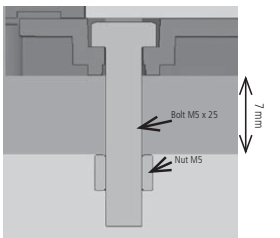

You have to remove the nut before mounting the FS3 on the bed and after mounting the FS3 to the bed, the nut is fastened to secure that the FS3 is fixed to the bed frame.

Please note that the max. torque on the nut should be 2.0 Nm (20 kg f. cm).

When mounting the FS3 bed model, it is important to run the cable through the hole of the FS3 in order to lead the cable through (see picture below).

Location of the notch for the cable of the FS3 bed model.

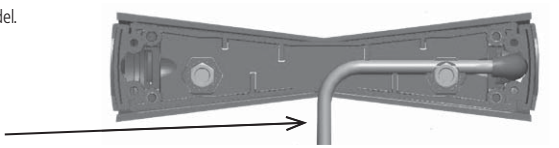

Recommendations

- Do not pull the cable or drop the FS3 on the floor.
- Do not play with the FS3.

12. HB30 (MEDLINE® CARELINE®)

The HB30 hand control is designed for better user experience and ergonomic fit for the hands of caregivers. The compact size ensures one hand operation. The HB30 is especially suitable for patient lifts and other MEDLINE® and CARELINE® applications like couches, tables and chairs for treatment and examination. The HB30 is available in an analogue version and an OpenBus™ version.

Usage:

- Usage temperature: 5 °C to 40 °C
- Storage temperature: -10 °C to +50 °C
- Compatibility: Analogue JUMBO Systems
  Analogue JUMBO systems with diode and OpenBus™
  JUMBO versions
  All OpenBus™ control boxes
- Approvals: IEC60601-1:2005 3rd edition approved,
  ANSI / AAMI ES60601-1:2005 3rd edition and CAN/CSA-22.2 No 60601-1:2008
  The HB30 is biocompatibility tested and approved according to DS/EN ISO 10993-5:2009, biological evaluation of medical devices - part 5: Tests for in vitro cytotoxicity. It is a demand for hand-held devices for patient lifts. The HB30 has a compact design and therefore it cannot be approved according to EN IEC60601-2-52 (Application Environment 4 for care beds used in Domestic areas (or EN1970)).

How to identify the cables:

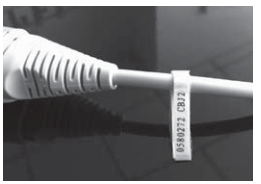

Each cable has a label for easy identification of item number and for which control box it is intended.

How to mount a cable:

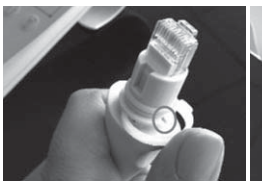

Step 1:
Mount the cable lock and fix it to the slot marked in the picture.

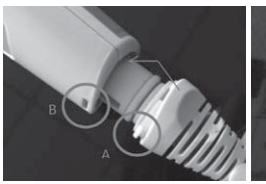

Step 2:
Fix the cable tab on the hand control's front side first.
Push in and twist a bit to fix the tab (see picture fit A into B).

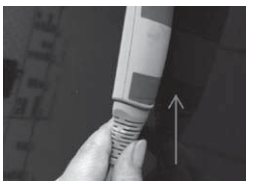

Step 3:
Fix the tab on the back as well by pushing.

How to remove a cable:

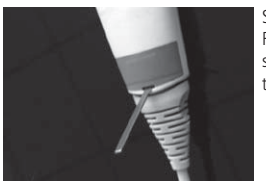

Step 1:
Release the cable by pushing e.g. a screwdriver into the hole on the back of the hand control. Twist and release.

Recommendations

- Please ensure that you use the right cable type to ensure the wished functionality. In case of lack of functionality of your hand control, check that the hand control cable is the right one for the intended control box or contact your local LINAK representative.
- Please note that HB3X0L0 version (analogue with diode) is not supported by the CBJC. The diode will light up at all times if used with the CBJC.
- Do not submerge the hand control under water.
- Unless otherwise specified or agreed with LINAK, the hand control is only intended to be used on LINAK systems.
- Do not sit or lie down on the hand control. It can cause unintended movement of the application.
- When changing hand controls for OpenBus™ systems, the power must be switched off.
- The force of the magnet depends on the thickness and the type of the lacquering, stickers, steel thickness etc.
  It is the responsibility of the customer to verify that the holding force on the application is acceptable.
- For hand controls with magnets it is the responsibility of the user/operator to evaluate any possible risk caused by use of permanent magnets.
- For hand controls with magnets it is recommended to have a parking place for the hand control on the application, where the customer ensures that the hand control does not fall off.

13. HB40 (MEDLINE® CARELINE® TECHLINE®)

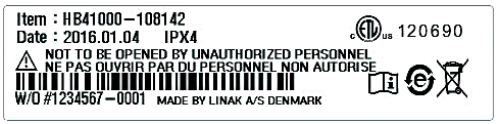

The HB40 series hand control are designed for use with LINAK control boxes.
These sturdy compact units are ergonomically designed and ideal for a vast range of applications from patient care beds and office furniture to industrial and agricultural duties.

Usage:

- Ambient temperature: +5 °C to +40 °C
- HB40 is compatible with CB8-T, CB9..AX (not CH.4) and CB12 (not CH.4)
- HB40A is compatible with CB8-A battery version. Fitted with plug for battery charger CH01.
- HB40E is compatible with CB9Px (except CB9..PM/PN) and CB14
- HB44H is only compatible with CB9..Ax and CB12 (if CH.4) 4 channels
- HB40T is only compatible with CB7 (max. 2 channels)

Compatibility:

	CB7	CB8	CB8A	CB9..Ax	CB9..Px (not CB9..PM/PN	CB12	CB14
HB4xO		x		x*		x	
HB4xA			x				
HB4xE					x		x
HB4xH				x (4ch.)		x (4ch.)	
HB4xT	x						

* only for channels 1, 2 and 3

14. HB50 (MEDLINE® CARELINE®)

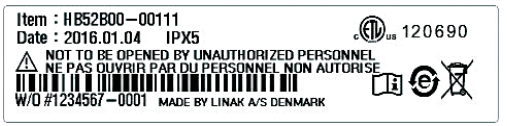

The HB50 is primarily designed for the LINAK JUMBO system and LINAK control boxes with memory functions.
The HB50 gives the user access to a range of memory functions, allowing present positions to be stored.
For use in a wide variety of hospital and patient care.

Usage:

- Ambient temperature: +5 °C to +40 °C
- HB50B is compatible with CBJ2
- HB50E is compatible with CB09P..Px types (except ..PM / PN) and CB14 with memory
- HB50J is compatible with CBJ1
- HB50Y is for Jumbo Home (CBJH)

15. HB60 (HOMELINE®)

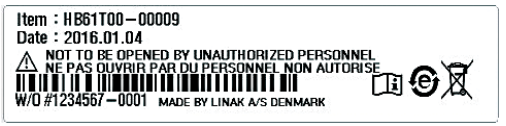

The HB60 series is exclusively designed to be used together with the LINAK HOMELINE® system: LA31/LA29 and CB9 with or without memory.

16. HB70 (MEDLINE® CARELINE®)

The HB70 offers simultaneous drive of multiple actuators which can be used for the memory options. The hand control HB70 can be used for both OpenBus™ and analogue systems and comes in 3 colours: black, dark grey and light grey.

Usage:
- Compatible with most LINAK control boxes.
- Approved according to: EN 60601-1, EN 60335-1 and UL 60601-1 as part of a LINAK actuator system

Recommendation

- It is not possible to combine HB7x with the binary based CB9..PM/PN.
- The IPX6 Washable version has a special adhesive for the front covers.
- The HB75xE0 used together with CB140 will give trend and anti-trend on channel 1 and 2 of the control box when using the last button row.
- All front covers use the codes W0 (not Washable) and WW (Washable) Memory:

Memory:
- The memory and parallel functions require the control box to have a microprocessor.
- When storing a memory position on the control box, the actuators must run to the desired position and the "*store*" button (S) must be pushed. Then the desired memory position button (1, 2 or 3) must be activated within 2 seconds.

17. HB80 (MEDLINE® CARELINE®)

The HB80 hand control has an optimised ergonomic design shaped for the hand. The hand control is suitable for all kinds of MEDLINE and CARELINE applications such as hospital beds, patient lifts, treatment and examination couches etc.

The HB80 hand control is available in versions with up to 10 or 12 activation buttons.

Usage:
- Usage temperature: 5 °C to 40 °C
- Storage temperature: -10 °C to +50 °C
- Compatibility: Compatible with many LINAK control boxes. For further questions, please ask your local LINAK.
- Approvals: IEC60601-1:2005 3rd edition, ANSI/AAMI ES60601-1:2005 3rd edition, and CAN/CSA-22.2 No 60601-1:2008.
  The HB86 version has a shorter distance between the buttons and cannot be approved according to EN IEC60601-2-52 Application Environment 4 for care beds used in Domestic area (or EN1970). HB80 is designed and tested in accordance with EN60601-2-52 cl. 201.11.6.6.101 (Machine washable medical beds). The HB80 must hang vertically from it's hook during the washing process.
  In order to maintain the flexibility of the cables, it is important that a coiled cable is placed in such a way that the cable's own weight does not strain the coil during the washing process.

Recommendations

- Clean the hand control regularly to ensure good hygiene standards.
- When a defective HB80 is replaced, check that the new HB80 has exactly the same specification and functionality.
- Do not submerge the hand control under water.
- Unless otherwise specified or agreed by LINAK - the hand control is only intended to be used on LINAK systems.
- When changing hand controls for OpenBus™ systems, the power must be switched off.
- It is recommended to check the hand control and cable for damage and holes made by violent handling before washing the application or at least once a year.
- It is recommended to have a parking place for the hand control on the application, where the customer ensures that the hand control does not fall off.

For hand controls with magnets:
- If hand controls with magnet are attached to a smooth surface, a movement or twisting of the cable, for example during transport, can cause the hand control to move and result in damage if the cable is squeezed.
- The force of the magnet depends on the thickness of the lacquering, the lacquering type, stickers, steel thickness etc. It is the responsibility of the customer to verify that the holding force on the application is acceptable.
- It is the responsibility of the user/operator to evaluate any possible risk caused by use of permanent magnets.

Warnings

- Do not sit or lie on the hand control. It can cause unintended movement of the application.
- There is a risk that items with internal magnet for mounting instead of hook can disturb function of cardiac pacemaker, implantable cardioverter defibrillators or magnetic implants!

18. HB100 Weighing Solution (MEDLINE® CARELINE®)

The HB100 is an intelligent hand control with the LINAK® Weighing Solution. It features a 2.4" colour display with a full navigation menu keypad, thus allowing the display to be dynamic without physically having to change the hand control. The HB100 will automatically scan the system and only show the features available to create a user-friendly experience.

The HB100 will be available with different software versions:

- HB110: The LINAK Weighing Solution. Together with the QLCI2, the HB110 is capable of displaying the weight of a patient as well as setting the Out Of Bed feature.

Usage:

- Operation temperature: +5 °C to + 40 °C
- Storage temperature: -10 °C to + 50 °C
- Relative humidity: 20% to 80% - non-condensing
- Atmospheric pressure: 700 to 1060 hPa
- Height above sea level: Max. 3000 meters
- Approvals: IEC 60601-1:2005 + Amd.1:2012 (Consolidated version IEC 60601-1:2012 Ed. 3.1)
  IEC 60601-1-2:2014 Ed. 4
- Compatibility: All OpenBus™ control boxes
- Flammability rating: V2
- Latex free: Yes

Replacing the cable

The cable for the HB100 can be replaced if damaged. To remove the cable, the cable lock must first be unlocked. This is done by moving the lock-pin clockwise with a screwdriver or another small object, until a red marker shows. When inserting a new cable, the lock pin must be moved counter-clockwise to secure a fastened cable connection.

Recommendations

- Keep the hand control upright when washing
- Do not submerge the hand control in water
- Unless otherwise specified or agreed with LINAK, the hand control is only intended to be used for LINAK systems
- When changing hand controls for OpenBus™ systems, the power must be switched off
- It is recommended to check the hand control and cable for damage and holes caused by violent handling before washing the application or at least once a year.

Warnings

- Do not sit or lie on the hand control. It can cause unintended movement of the application
- The application manufacturer must write an end-user manual based on the LINAK user manual which also includes relevant warnings, information on how to carry out regular inspection and a functionality description. End-users must be trained in all functions.

19. HB200 Wireless (MEDLINE® CARELINE®)

The HB200 Wireless is a Bluetooth Low Energy (BLE) hand control for the medical and beds segments. It is available with 3 to 5 rows and locking of individual channels by using a magnet key. One LED will function as pairing and battery indicator.

Usage:

- Operation temperature: +5 °C to + 40 °C
- Storage temperature: -10 °C to + 50 °C
- Relative humidity: 20% to 80% non-condensing
- Atmospheric pressure: 700 to 1060 hPa
- Approvals: IEC60601-1
  ANSI/AAMI ES60601-1
  CAN/CSA-22.2 No. 60601-1
- Compatibility: All OpenBus™ BLE control boxes

Functionality

Locking
HB200 is able to lock individual rows. To lock a row hold the magnet key over the marking (◎) and press an odd key number (Typically the up arrow). To unlock a row use the magnet key and press an even number (Typically the down arrow).

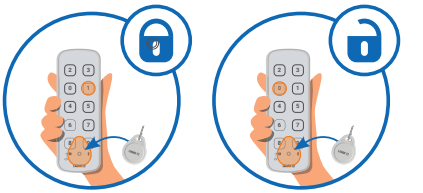

Magnet key
Remember to order magnet key:
Magnet key - ordering no. 0858008 (RAL 7035 light grey)

Battery
The battery in the HB200 is a standard CR2032 coin cell battery.

Battery lifetime
With a usage of 140 sec/day, the HB200 will last approximately two years.

Changing the battery
To change the HB200 battery, open the battery cover on the back using a coin or a similar tool to turn the arrow counterclockwise from the locked state to the unlocked state.

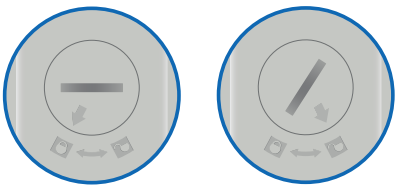

Low battery indication - When the battery power level falls below 20%, the LED will flash 4 times when a key is pressed.

New battery indication - When the battery has been changed, the LED will be lit for 4 seconds after the first keypress.

Battery cover:
It is possible to order extra battery covers.
Battery cover ordering no. SA1031W9012

Pairing Bluetooth devices

Direct pairing

Direct pairing is used for pairing a LINAK control directly to a LINAK control box that supports BLE.

1. Enter pairing mode
2. Move the hand control closer to the control box you want to pair with
3. Pair the hand control with the control box

Entering Pairing Mode

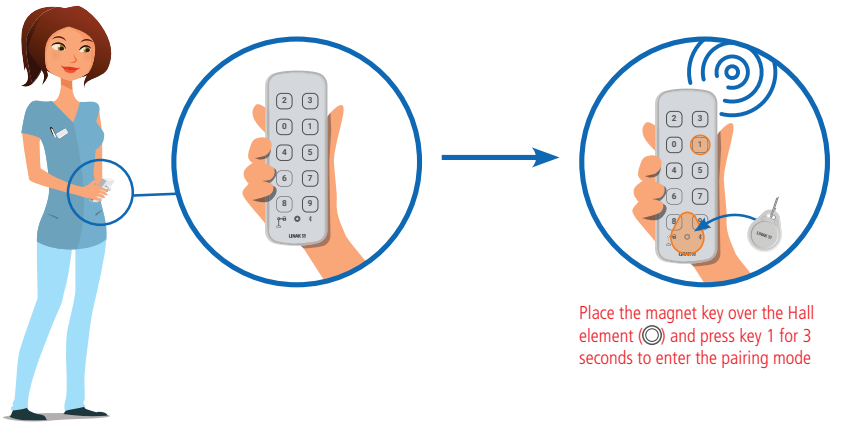

Place the magnet key over the Hall element (◎) and press key 1 for 3 seconds to enter the pairing mode

When in pairing mode, the control box buzzer will begin to beep, and the LED will begin to blink. The control unit LED will also begin to blink with the same frequency as the nearest control box.

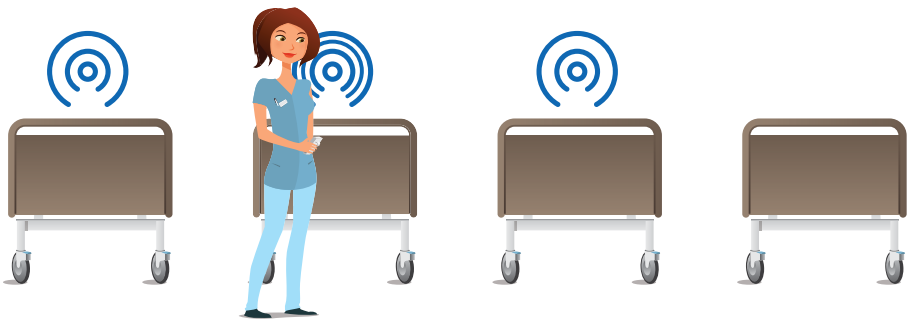

In pairing mode, the light/sound frequency will increase when the HB200 gets closer to a control box.

Connecting to the control box

When the hand control LED is blinking fast and the control box gives a high frequency sound in the same speed, the devices are ready for pairing. To finalise the pairing, press Key 1 on the hand control.

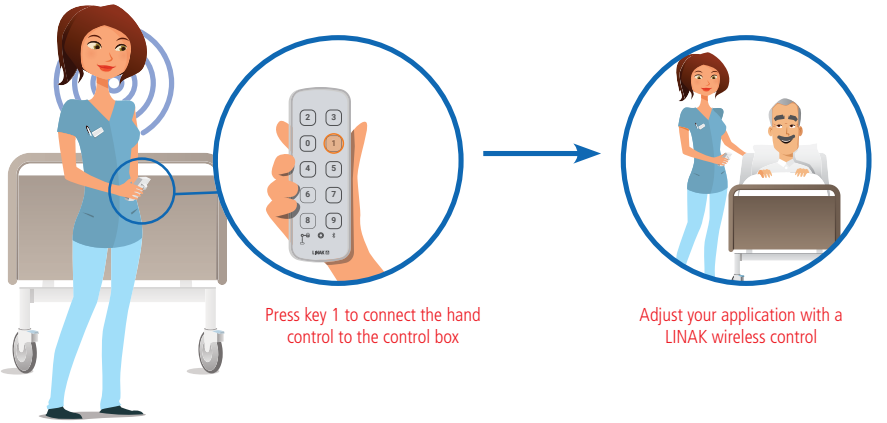

Recommendations

- Do not submerge the hand control in water.
- Unless otherwise specified or agreed with LINAK, the hand control is only intended to be used for LINAK systems.
- It is recommended to check the hand control for damage and holes caused by violent handling before washing the application or at least once a year.
- Always perform the pairing of hand control and control box in close proximity to the application.
  Also ensure that the pairing has been made with the correct application by operating the application after ended pairing.
- When intending to operate an application with LINAK BLE, please ensure that the correct BLE hand control is used. Otherwise, there is a risk of unintended movement of the application that has been paired with the BLE hand control.
- When changing the battery, the battery cover must be lubricated with technical white Vaseline for easy mounting and to avoid fluids from entering the hand control.

Warnings

Wireless risks and recommendations

Due to some customer concerns regarding the range of BLE, LINAK decided to set the RF sensitivity and the transmit power settings to a maximum. In addition to that, LINAK Standard BLE allows pairing all the time.

Risk 1

If a BLE hand control is to be paired with an application, this can be done without coming closer to the application, as the above-mentioned settings are at a maximum. In such a scenario, there is a risk of pairing with another application from a longer distance as opposed to the distance of the application you want to pair with. The rule is that a BLE hand control is paired with the closest BLE device that it detects, however, the BLE device is not always physically closest.

Recommendation for Risk 1

The pairing process must always be made in near proximity to the application. It must also be ensured that the pairing is done with the correct application by simply operating the application after the pairing process.

Risk 2

In case that there are more LINAK BLE applications in a building and the BLE hand controls are accidentally swapped, there is a risk of operating another BLE application if within range. This can cause unintended movement and can have severe consequences for the patients' health.

Recommendation for Risk 2

When intending to operate an application with LINAK BLE, it must be ensured that the correct BLE hand control is used. Otherwise, there is a risk of unintended movement of the application that has been paired with the BLE hand control.

20. HD80 (MEDLINE® CARELINE®)

The HD80 makes it possible to have two hand controls in one unit. The hand control is equipped with a magnet locking function, making it possible to have two levels of operation – one for the patient and relatives and one for the caregiver staff. The HD80 provides a great overview using LED indication of functions being locked or unlocked. The hand control is designed to work with OpenBus™ systems.

Usage:

- Usage temperature: 5 °C to 40 °C
- Storage temperature: -10 °C to +50 °C
- Compatibility: Compatible with CB6 and OpenBus™ control boxes. Please contact LINAK
- Relative humidity: 20% to 80% - non-condensing
- Atmospheric pressure: 700 to 1060 hPa (3000 m)
- Height above sea level: Max. 3000 meters
- Approvals: IEC60601-1, ANSI/AAMI ES60601-1 and CAN/CSA-22.2 No 60601-1

Standard HD80 - HD84C1J0550004-200120012D1C000

Item number J90208

This hand control can be used as a combination of a hand control and the ACO. It has two levels of operation, where the first is a patient mode with regular operations like hi/lo and trend/anti-trend. Use the magnet key to operate the next level, care mode, where it is possible to lock functions. The LEDs show which functions are locked and which are not.

Magnet key - article no. 0858008

Warning

- Do not sit or lie on the hand control. It can cause unintended movement of the bed.
- Inform the customer that after loss of mains power, the lock state is reset to the default setting. Be aware of a special setup for a magnet lock of low power system in case of power down on mains. Also be aware that the lock is reset when running on battery or when powered down.
- Inform the customer that using the magnet key cannot wake up a low power system or a system running on battery. The system will wake up when activating a key and then the magnet key can unlock the system.
- Inform the customer that a powerful magnetic field may change the lock state.
- Always use O-rings on connectors and cable locks.
- There is a risk that items with internal magnet for mounting instead of hook can disturb function of cardiac pacemaker, implantable cardioverter defibrillators or magnetic implants!.

Recommendations

- Inform the customer to use only the magnet key supplied by LINAK. We also recommended to make a functional test of the application before putting it into operation.
- Clean the hand control regularly to ensure good hygiene standards.
- When replacing a defective HD80, check that the new HD80 has exactly the same specification and functionality.
- Do not submerge the hand control under water.
- Unless otherwise specified or agreed by LINAK, the hand control is only intended to be used on LINAK systems.
- When changing hand controls for OpenBus™, the power must be switched off.
- It is recommended to check the hand control and cable for damage and holes made by violent handling before washing the bed or at least once a year.
- In order to maintain the flexibility of the cables, it is important that a coiled cable is placed in such a way that the cable's own weight does not strain the coil during the washing process.

For hand controls with magnets:

- If hand controls with magnets are hooked on a smooth surface, a movement or twisting of the cable, for example during transport, can cause the hand control to move and result in damage if the cable gets squeezed somewhere.
- The force of the magnet depends on the thickness of the lacquering, the lacquering type, stickers, steel thickness etc. It is the responsibility of the customer to verify that the holding force on the application is acceptable.
- It is the responsibility of the user/operator to evaluate any possible risk caused by use of magnets.
- It is recommended to have a parking place for the hand control on the application where the customer ensures that the hand control does not fall off.

21. HD80 JUMBO (MEDLINE® CARELINE®)

The HD80 JUMBO is a hand control with an optimised ergonomic design and functions that are activated via dome buttons.

Usage:

- Usage temperature: 5° C to 40° C
- Storage temperature: -10° C to +50° C
- Compatibility: Only compatible with CBJ Care
- Relative humidity: 20% to 80% - non-condensing
- Atmospheric pressure: 700 to 1060 hPa (3000 m)
- Height above sea level: Max. 3000 meters
- Flammability rating: UL94-V2
- Approvals: IEC60601-1, ANSI/AAMI ES60601-1 and CAN/CSA-22.2 No 60601-1

Warnings

- Do not sit or lie on the hand control. It can cause unintended movement of the application.
- Always use O-ring on connectors and cable locks.
- There is a risk that items with internal magnet for mounting instead of hook can disturb cardiac pacemaker functions, implantable cardioverters, defibrillators or magnetic implants.

Recommendations

- Clean the hand control regularly to ensure good hygiene standards.
- When a defective HD80 is replaced, check that the new HD80 has exactly the same specification and functionality.
- Do not submerge the hand control under water.
- Unless otherwise specified or agreed by LINAK, the hand control is only intended to be used on LINAK systems.
- When changing hand controls for OpenBus™, the power must be switched off.
- It is recommended to check the hand control and cable for damage and holes made by violent handling before washing the bed or at least once a year.
- In order to maintain the flexibility of the cables, it is important that a coiled cable is placed in such a way that the cable's own weight does not strain the coil during the washing process.

Hand controls with magnets:

- If hand controls with magnet are hooked on a smooth surface, a movement or twisting of the cable, for instance during transport, can cause the hand control to move and result in damage, if the cable is squeezed somewhere.
- The force of the magnet depends on the lacquering thickness, the lacquering type, stickers, steel thickness etc. The customer has the responsibility to verify that the holding force on the application is acceptable.
- The user/operator is responsible for evaluating any potential risk caused by the use of magnets.
- It is recommended to have a parking spot for the hand control on the application where the customer ensures that the hand control does not fall off.

22. HL70 (MEDLINE® CARELINE®)

The HL70 is a hand control with integrated locking function, where a selective locking of the different functions is available by use of a special key.
The HL70 is an alternative to the HB70 combined with an attendant Control Panel (ACM, ACL, etc.).

Usage:

- Exchangeable with HB70
- Compatible with many LINAK control boxes
- Approved according to: IEC60601-1:2005 3rd edition, ANSI / AAMI ES60601-1:2005, 3rd edition, and CAN / CSA-22.2 No 60601-1:2008

Recommendations

- To switch between locked and unlocked position a small knob between the two push buttons has to be turned 20° by use of a special key. The key is for the use of the nursing staff only, there are two types, one is made of plastic the other metal.
- The key has to be ordered separately. Article no. for the plastic key is: 00914516, and the metal key number is: 00914721
- For all types:
  Attention should be given to ensure that the channels shown correspond to the channels available on the chosen control box.

23. HL80 (MEDLINE® CARELINE®)

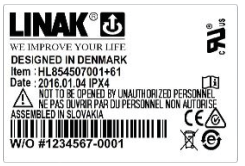

The HL80 hand control has an optimised ergonomic design and switch activations.

The HL80 is a lockable hand control, which makes it possible to lock or unlock one or several functions.

It is available in several different standard versions with a variation of bed symbols for easy interaction with end-users.

Usage:

- Approvals: IEC60601-1, ANSI/AAMI ES60601-1 and CAN/CSA-22.2 No 60601-1

Warnings

- When using the locking function on HL80 check that the hand control switches are actually locked.
- Locking function on HL80 only locks the actual hand control .
- Do not sit or lie on the hand control . It can cause unintended movement of the application.
- Locking of a single channel at HL80 do not neccesarily prevent that channel from activation, if the same channel are covered by another hand control button (e.g. at simultaneous drive) or another control unit.
- There is a risk that items with internal magnet for mounting instead of hook can disturb function of cardiac pacemaker, implantable cardioverter defibrillators or magnetic implants!.

Recommendations

- Violent use of the key on HL80 can cause either damage to the keyhole or the key itself.
- If a lock key is missing, then full control over the application could be missing.
- Clean the hand control regularly to ensure good hygiene standards.
- When a defective HL80 is replaced, check that the new HL80 has exactly the same specification and fuctionality.
- Do not submerge the hand control under water.
- Unless otherwise specified or agreed by LINAK, the hand control is only intended to be used on LINAK systems.
- When changing hand controls for OpenBus™ systems, the power must be switched off.
- It is recommended to check the hand control and cable for damage and holes made by violent handling before washing the application or at least once a year.
- It is recommended to have a parking place for the hand control on the application, where the customer ensures that the hand control does not fall off.

For hand controls with magnet:

- If hand controls with magnet are attached to a smooth surface, a movement or twisting of the cable, for example during transport, can cause the hand control to move and result in damage if the cable is squeezed.
- The force of the magnet depends on the thickness of the lacquering, the lacquering type, stickers, steel thickness etc. It is the responsibility of the customer to verify that the holding force on the application is acceptable.
- It is the responsibility of the user/operator to evaluate any possible risk caused by use of permanent magnets.

24. LS (MEDLINE® CARELINE® TECHLINE®)

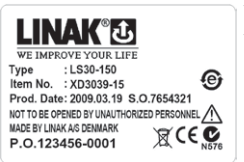

There are two types of LINAK limit switches, for actuators type LA22, LA30, LA30S , LS, and LSD.

The LS type gives a signal in two fixed end positions, but requires a control unit to stop the actuator when the microswitches are activated.

25. LSD (MEDLINE® CARELINE® TECHLINE®)

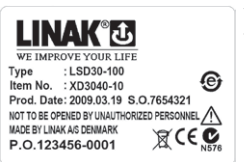

The LSD type controls the stroke length of the actuator between two fixed end positions by cutting off the current to the motor.

7. Information on specific JUMBO™

1. BAJ (MEDLINE® CARELINE®)

The battery pack BAJ has been specially developed for use with the JUMBO system.
They are easy to exchange through an integrated snap system, and can easily be mounted on the mounting brackets.

Usage:

- BAJ is a part of the JUMBO system. It is compatible with CBJ1/CBJ2, CHJ2, CBJ Care and COBO
- Duty cycle: 10 % or 2 min. continuous use then 18 min. not in use
- Ambient temperatures: +5 °C to +40 °C
- Storage temperature: -15 °C to +40 °C
- Relative humidity: 20% to 80% - non-condensing
- Atmospheric pressure: 700 to 1060 hPa
- Height above sea level: Max. 3000 meters
- Flammability rating: UL94-V0
- Approvals: IEC60601-1, ANSI/AAMI ES60601, CAN/CSA-22.2 No 60601-1

Charging:

BAJ can be charged by

- Charger CHJ2
- Control box CBJ1/2, CBJ Care, COBO
- BAJ with integrated DC plug can also be charged by use of the external charger CH01

Warning
Check at regular intervals that the ventilation hole is undamaged and intact. The construction of the ventilation stub permits battery gasses to get out, but it does not permit penetration of water.

2. BAJL Li-Ion (MEDLINE® CARELINE®)

The BAJL Li-Ion battery pack has been specially developed for use with the JUMBO system for patient lifts and sit to stand lifts.
It is a low-weight battery with reliable and high performance.

Usage:

- Compatibility: CBJ Care, COBO, CHJ2 and CH01
- Duty cycle: BAJL003xxxxxxxx:
  10 % (2/18 min.) at max. current draw 10 Amp (ambient temperature ≤ 30 °C)
  10 % (2/18 min.) at max. current draw 8 Amp or
  5% (1/19 min.) at max. current draw 10 Amp (ambient temperature > 30 °C)
  BAJL004xxxxxxxx:
  10 % (2/18 min.) at max. current draw 10 Amp (standard ambient temperature recommendations)
- Charging: Via JUMBO wall charger CHJ2 or via JUMBO control box with integrated charger
- Charging state: Maximum 30% when shipped from LINAK
- Recharging during storage: Recharge the battery 6 months at the latest after production date stated on the label
- Operating temperature: +5 °C to +40 °C
- Charging temperature: +10 °C to +40 °C
- Charging time: Type 3: 3 to 4 hours
  Type 4: 6 to 8 hours
- Storage temperature: -10 °C to +40 °C (+10 °C to +25 °C - recommended)
  The batteries must be stored in an applicable storage room without direct sunlight.
- Relative humidity: 20% to 80% - non-condensing
- Atmospheric pressure: 700 to 1060 hPa (3000 m)
- Height above sea level: Max. 3000 meters
- Approvals: IEC60601-1:2005 3rd edition,
  ANSI / AAMI ES60601-1:2005, 3rd edition,
  CAN / CSA-22.2 No 60601-1:2008,
  IEC62133 2nd edition,
  UL2054, 2nd edition
  PSE (pending)
  UN38.8, 6th edition (needed for transport of lithium batteries)

Mounting
Do not mount the battery upside down.
Please follow the mounting instructions of the control box e.g. CBJ Care or COBO.

Standby mode
When the BAJL Li-Ion is not being used for a longer period - more than a week - or when it is on stock, it enters into a standby mode to save power and protect the battery from deep discharge.
- Please connect the charger for approx. 15 seconds to exit the standby mode before use.
- There is no audio signal to indicate the standby mode or to indicate exit of standby mode.

After exit of the standby mode
If there is still no power on, the battery needs to be charged.
After charging, the hand control and/or the control box will indicate the battery capacity level again

Deep discharge protection
The BAJL Li-Ion has a deep discharge protection to extend the battery lifetime. The deep discharge protection is activated when the battery is discharged.

- Please connect the charger for approx. 15 seconds to exit the deep discharge mode before use.

If the battery is completely discharged, the charging will be started at a very small rate to protect the battery. This small charging rate is not sufficient to turn on the light in the charger, and therefore the user may believe that the system has not yet started. Depending on the battery state, it may take several hours to get to the normal charging state. The orange light of the control box will not be turned on as the operation is analogue. It is therefore not possible to see that the charging has started, however, only at a low level.

If any of the lithium ion batteries built into LINAK products is found to be defective under warranty, LINAK will provide a new product to the OEM. LINAK explicitly disclaims all other remedies. LINAK shall not in any event be liable under any circumstances for any special indirect punitive incidental or consequential damages or losses arising from any incident related to the inherent risk of thermal runaway in the lithium ion cell and any use of LINAK products. Moreover, LINAK explicitly disclaims lost profits, failure to realise expected savings, any claim against our customer by a third party, or any other commercial or economic losses of any kind, even if LINAK has been advised of the possibility of such damages or losses.

Transportation
The lithium ion batteries must be packed and transported according to applicable regulations. Always ask your local transportation provider how to handle the transportation of lithium ion batteries.

Recommendations:

- Do not exceed the storage temperature as it will shorten the lifetime and performance.
- Allow the battery to settle to the temperature specified in the user manual before use or charging.
- Only use correct LINAK charger (CHJ2, CH01 or integrated charger in JUMBO control box).
- Charge the battery fully before first use.
- Do not exceed the duty cycle as it will shorten the life time and performance.
- BAJL Li-ion is not intended for use in outdoor applications and indoor pool environments.
- If the battery is completely discharged, then recharge the battery before storage.
- Do not leave the battery discharged, but charge it as soon as possible (10 minutes resting time).
- Unintentional use of the emergency button, e.g. short activation and deactivation of the emergency button after operating the actuators, can lead to an error indication of remaining battery capacity. The battery capacity will however be shown correctly approx. 20 seconds after activation of the emergency button.
- The BAJL goes into sleep mode approximately 20 seconds after the CBJ Care enters into sleep mode. If the CBJ Care is reactivated within this period, it can lead to a wrong remaining battery capacity indication. The remaining battery capacity will however be shown correctly approx. 20 seconds after the reactivation of the CBJ Care.

Safety feature
BAJL Li-ion contains several mechanisms to protect itself from being damaged due to excessive use.
In case of overheating, the device will activate a thermal protection. No power output will be available until the temperature has returned to normal operating range. Overheating may occur by extensive use at high temperature or by exceeding the duty cycle.

Battery safety
LINAK li-ion batteries for medical use are designed and manufactured to be safe through the product lifetime. LINAK has performed various tests of the batteries in normal use, abuse situations and failure situations to verify the design and production methods. These tests have not shown any unacceptable risks.

The batteries are also UL-tested to have an independent organisation verify the safety of the design and to obtain a safety certificate.
This means that UL regularly inspects the factory to check that standards are complied with.
UL has tested in accordance with the following standards:
UN38.3, 6th edition - Battery Transportation Safety
IEC62133 Battery Safety
UL2054, 2nd edition - Standard for Household and Commercial Batteries

Warnings

Lithium ion batteries differ from the lead acid technology as they have a built-in deep discharge protection.

- Loss of power might happen due to the battery deep discharge protection. This will only happen in case of continuous battery use despite warnings. In this event, there may be no warning and the application may not be able to move when expected.
- In his risk analysis, the customer must take into consideration how to ensure alternative means to make movement, e.g. quick release or manual lowering.
- Do not open, disassemble or modify the battery housing as damaging the cell or circuitry may develop excessive heat.
- Discontinue the battery use immediately if the battery emits an unusual smell, feels hot, changes colour or shape, or appears abnormal in any other way.
- Lithium ion batteries that are defective, have been damaged or might produce excessive heat or fire are not allowed for transportation.
- The combination of CBJ1 or CBJ2 with BAJL might not be able to complete a full cycle after the audio signal of low battery warning.
- For safety reasons, please adhere to the indicated charging, storage and operation temperature as extreme temperatures (low or high) might ignite the batteries and cause fire.
- In case the battery turns hot, disconnect it and evacuate the room and wait for 2 hours before taking further steps.
- The mounting instructions must be followed in order to avoid exposing batteries to water.
- The customer is responsible for determining that charger and host device work properly.
- Recharge batteries every 6 months at a minimum.
- Dispose of the batteries in accordance with local regulations.

DO NOT:

- Heat or burn the batteries
- Short circuit the batteries
- Expose the batteries to high impact
- Crush or puncture the batteries
- Use batteries with signs of damage or corrosion
- Charge or store the batteries near combustible material
- Charge the batteries without supervision
- Expose the batteries to water or other liquids

Compatibility:

Please be aware that BAJL Li-ion is not compatible with:

- CBJ1, CBJ2 – incl. pool lift versions
- COBO20

3. CBJ1/CBJ2 (MEDLINE® CARELINE®)

The control boxes CBJ1 and CBJ2 are part of the battery driven JUMBO system. JUMBO is a modular system combining an actuator, a control box (CBJ1, CBJ2), a battery (BAJ1) and a charger (CHJ2) in a flexible solution, specially developed for patient lifts.
The complete system is medically approved and contains a series of features which meet the patients need for a safe and comfortable lift, e.g. CBJ1 and CBJ2 are equipped with a soft-start/stop function, emergency lowering function etc.

CBJ1 and CBJ2 are available in a special edition that can be used in the harsh conditions in the pool environment both outdoor and indoor.

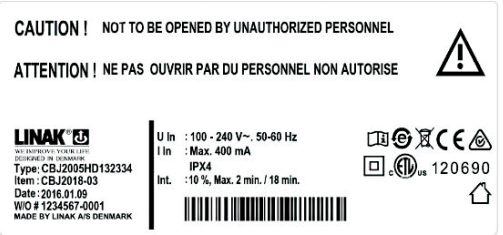

Usage:

- CBJ1/CBJ2 with internal charger: Nominal current draw max. 400 mA
  Power consumption (standby) max. 2.5 W
  Power consumption (charging) max. 19 W
- Duty cycle: max. 10 % or 2 min. continuous use then 18 min. without use
- Ambient temperature: +5 °C to +40 °C
- Storage temperature: -10 °C to +50 °C
- Relative humidity: 20% to 80% - non-condensing
- Height above sea level: Max. 3000 meters
- Approvals: IEC60601-1, ANSI/AAMI ES60601, CAN/CSA-22.2 No 60601-1
- For one or two actuators (lift and leg spreader actuator)

Recommendations

- The mains cable must always be ordered separately when ordering a CBJ1, CBJ2 with an internal charger.
- Use only original LINAK mains cables to ensure proper connection to internal charger.
- When charging, the CBJ1, CBJ2 will not be able to operate any actuators.
- By use of charger CH01 it is possible to activate the actuators when charging. However, this is not recommended as it can damage the control box or the charger CH01.
- When the CBJ1, CBJ2 with LCD display option is combined with the battery BAJ Li-Ion, the LCD display can indicate empty battery even if the battery capacity is not low.
  The acoustic alarm will always be activated at low battery capacity independent of display indication.

Warning

- In order to avoid injury, the emergency-stop should be activated in (all) transport and cleaning situations.
- BAJ Li-Ion batteries differ from BAJ1 lead acid as they have built-in discharge protection.
  If the user continues to use the battery despite warning signals, loss of power might happen due to the battery deep discharge protection.
  In this event, there may be no warning and the application may not be ableto move when expected.
- The combination of CBJ1 or CBJ2 with BAJL might not be able to complete a full cycle after low battery warning.

Adjustment instructions for the JUMBO application.

Tool	For the adjustment you must use a trimming screwdriver, which can be purchased from LINAK A/S. It is also possible to use other types of trimming screwdrivers for the adjustment. **Ordinary screwdrivers cannot be used, as they will damage the potentiometer slot.** When you receive the JUMBO from LINAK A/S it is adjusted to min. current cut-off.
1.	Connect the JUMBO control box to the actuator.
2.	Load the actuator with the required load.
3.	Turn the potentiometer completely clockwise.
4.	Run the actuator in the loaded direction at the same time turn the potentiometer anticlockwise until the actuator stops.
5.	Turn the potentiometer 3 times clockwise.
6.	Check JUMBO can lift the loaded actuator.
7.	Insert the plugs article no. 0009020 (Light grey (RAL7035) or 0009019 (Dark grey (RAL7016) to ensure IP protection

Mounting the CBJ1, CBJ2

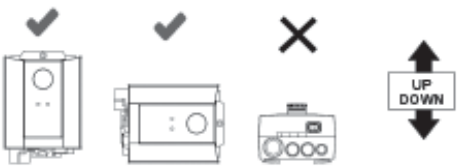

Special care should be taken when mounting the CBJ1, CBJ2.

As long as the CBJ1, CBJ2 is mounted correctly then the CBJ1, CBJ2 complies to IPX5.
If the CBJ1, CBJ2 is mounted incorrectly, then water will gather around the screw holes resulting in non-compliance with IPX5!
CBJ1, CBJ2 with variable current cut-off: the protection plugs must always be inserted to ensure IP protection after adjustment.

When using the control box with emergency stop, the stop button must be activated in cleaning situations in order to comply with IPX5.
The battery pack BAJ1 must not be removed in cleaning situations, doing so could result in non-compliance with IPX5.

If the CBJ1, CBJ2 is fitted with option B, D and F (DC power connector), the protection plug ex. 00918174 must always be inserted to ensure IP protection, if the port is not used. IP rating only applies when the battery is connected to the control box.

4. CBJ-Care (MEDLINE® CARELINE®)

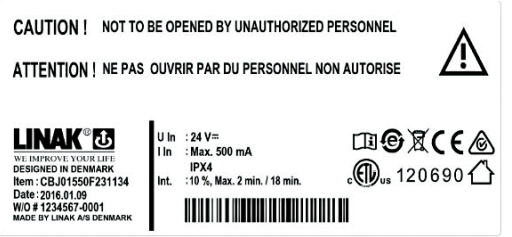

The control box CBJ Care is part of the JUMBO system. JUMBO is a modular system combining an actuator, control box (CBJ Care), battery (BAJ1, BAJL), wall charger (CHJ2), control box prepared for external charger by use of wall-plug charger CH01, and a hand control in a flexible solution, specially developed for patient lifts.

The complete system contains a series of features which meet the patient's need for a safe and comfortable lift.

CBJ Care is available in 3 versions, one with LEDs, one with a display and a third without display and LEDs.

It is possible to have control buttons on the front cover to have an easy control option if the hand control is missing. Furthermore it is possible to have 3 channels via a T-cable in channel 1. The 3rd channel for tilt function adds value for the patient and the caregiver.

Usage:

- CBJ Care with internal charger: Nominal current draw max. 400 mA
  Power consumption (standby) max. 2.5 W
  Power consumption (charging) max. 19 W
- Duty cycle: Max. 10 % or 2 min.continuous use then 18 min. without use
- Ambient temperature: +5° to +40°
- Storage temperature: -10° C to +50° C
- Relative humidity: 20% to 80% - non-condensing
- Atmospheric pressure: 700 to 1060 hPa
- Approvals: IEC60601-1, IEC60601-1-6
  ANSI / AAMI ES60601-1,
  CAN/CSA-22.2 No 60601-1

Instructions for uses

- Before start-up we recommend to reset the service counters – days and cycles until next service visit. To reset press the up and down button on the control box or the hand control for 5 seconds. An audio signal will confirm the resetting.
- When charging, the CBJ Care will not be able to operate any actuators.
- It is not possible to use other battery types than BAJ1 or BAJL with the CBJ Care.
- Use only original LINAK mains cables to ensure proper connection to internal charger.
- The green battery indicator (100% to 50% capacity remaining) will light up during charging even though the battery is not fully charged.
  It is necessary to use the "*CHARGE*" LED to indicate whether or not the battery is fully charged (when using internal charger).
  The CHARGE indicator will light up during charging and turn off when the battery is fully charged.
- When resetting the CBJ Care or updating other settings than using learn mode, the CBJ Care must not be disconnected from the battery and the emergency stop must not be activated within a time span of at least 10 seconds. This is to ensure the correct storage of the new values to the memory banks of the CBJ Care.

Recommendations

Hot Plugging:
Removing or adding any OpenBus™ cables is not allowed when the control box is on power via mains supply or battery!
If necessary anyway, follow the below procedure:
1. Remove mains or battery and wait 5 sec.
2. Mount or dismount the required cables

If this procedure is NOT followed it may result in a damaged OpenBus™ driver circuit.
The risk of a damaged circuit increases if the accessory has a high start current (in rush current).

Emergency lowering/lifting:
By use of BAJ1, the lifting arm can be lowered by pressing e.g. a pen in the hole or use the control buttons, if present.

This is a permitted method of lowering/lifting.

The emergency lowering/lifting "*buttons*" work as normal hand control buttons (you do not get extended functionality by using these when the battery is low).

By use of BAJL, please be aware that loss of power might happen due to the battery deep discharge protection.
This will only happen by continuous use of the battery despite warning.

Warnings
In order to avoid injury, the emergency-stop should be activated in (all) shipping situations.

Functionality – JUMBO Care with display

Below you find information about what to read-out on the display version of JUMBO Care. Basically the functionality for the display version is the same as the diode version, but more information can be read out on the display.

Driving information

As long as a hand control button function is activated driving information will be shown on the display.
Either lifting arm up, lifting arm down, legs in or legs out or tilt of sling.

The only exception to this is when the battery is flat (stage 3 and 4 – see below).
At that point the battery information will be shown instead.

Battery information

The battery discharging will be shown in four stages:

	Battery state 1:	The battery is ok, no need for charging (100 - 50 %)
	Battery state 2:	Battery needs charging. (50 - 25 %)
	Battery state 3:	Battery needs charging. (Less than 25 %) Buzzer sound is provided when a button is pressed in this battery state.
	Battery state 4: (BAJ1 lead acid)	The battery needs charging. At this stage some of the functionality of the lift is lost. At this battery stage, it is not possible to drive the lifting arm up or down. Furthermore, an audio signal will sound when a control button is activated (17 V or lower). The symbol will switch between the two pictures for 10 seconds. The battery symbol is shown when the box is active until power down (2 minutes after use).
	Battery state 4: (BAJL li-ion)	When using CBJ Care with display together with a BAJL battery, the display will not show the *"Battery state 4"* symbol. The BAJL deep discharge protection overrules the *"battery state 4"*. Consequently, the CBJ Care shuts down, and the empty battery symbol is not shown.

- The battery level is measured via voltage level. This means that it is possible to experience e.g. that the battery switches from state 1 to state 2 and back to state 1.

Charging of battery:

When the mains cable is plugged in and a control button is activated the symbol to the left is shown on the display until power down 2 minutes later. The purpose of the symbol is to tell the user that it is not possible to use the lift when it is plugged in to the mains.

Short circuit:

If there is a short circuit the control box will show the short circuit symbol with a recommendation to check the connections.
The symbol will be shown until the short circuit has been repaired.

Service:

The control box will show the service symbol when it is time for service. The standard setting is after 12 months / 8000 cycles. After each power down, the first time that the service symbol is shown the control box will provide an audio sound (100 milli seconds) so that the user gets a reminder about checking the display.

The 'SERVICE' text will blink 3 times, then a static service symbol will be shown (10 seconds in total). Even though it is time for service the system will still be functional and work as normal.

Overload Channel 1 only:

When overload occurs (according to the pre- defined current cut off limit) the overload symbol will be shown on the display. The 'MAX' text will blink 3 times and the overload symbol will be shown for 10 seconds in total.

Service information read-out

Basic service information can be read out on the display. To get the service information on the display please press the lifting arm up button (only ½ second press). The information will be shown for ½ minute or until other buttons are activated.

-------> Total cycles done on channel 1
-------> Total work done on channel 1
-------> Total number of overloads (channel 1)
-------> Days since last service/Days between services

If "*No days*" are chosen for service interval then the display will show Days since last service /-.

Recommendations for use of learn mode function:

- The purpose of using learn mode function is to adjust the lift to no more than 1.5 times the max. load. The actuator will not stop exactly at the load it has been adjusted to as the actuator uses less current when its components have been run in. When the max. current value has been registered using the learn mode function, the control box will be able to use max. current +10 %. This ensures that the lift is capable of lifting the set load, however it cannot lift more than 1.5 times of the set load.
- When registering current limits, be aware to use a defined set of actuator and control box
- The ambient temperature must be approx. 20 °C
- The difference between the highest and lowest load must not be more than max. 10 %
- To activate the learn mode function, use the special hand control (HB7x235-00)
- If an actuator or CBJ Care is exchanged, it is necessary to reset the max. load to ensure the correct cut-off value for the new system
- Always use fully charged batteries for learn mode procedures
- A max. cut-off value of 11 Amp can be registered (stored)
- The tolerance for preset current cut-off is: +/- 1 Amp
- The current cut-off value can be reset by means of the learn mode function, however this is not in accordance with EN10535

Mounting of CBJ Care

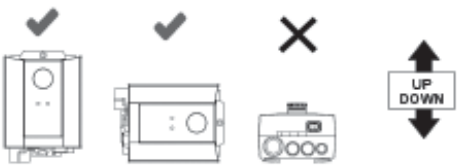

Special care should be taken when mounting the CBJ Care.

As long as the the CBJ Care is mounted correctly then the CBJ Care complies to IPX4. If the CBJ Care is mounted incorrectly then water will gather around the screw holes resulting in non-compliance with IPX4!

If the control box is equipped with emergency stop, the stop button must be activated in cleaning situations in order to comply with IPX4.

The battery pack BAJ1 or BAJL must NOT be removed in cleaning situations, doing so could result in non-compliance with IPX4.

If the CBJ Care is fitted with external charger option (DC power connector), the protection plug ex. 00918174 must always be inserted to ensure IP protection, if the port is not used.

IP rating only applies when the battery is connected to the control box.

5. CBJ-Home (MEDLINE® CARELINE®)

The CBJ-Home is a specially developed solution for patient lifts.
The complete system consists of a control box and a battery enclosed in a single elegant module.
The system is approved according to medical safety standards and contains a series of features ensuring a safe comfortable lift, e.g. the CBJ-Home is equipped with a soft-start function, electrical emergency lowering, emergency stop etc.

Usage:

- CBJ Home with internal charger: Nominal current draw max. 280 mA
  Power consumption (standby) max. 1.3 W
  Power consumption (charging) max. 12 W
- Duty cycle: Max. 10 % or 2 min. continuous use then 18 min. without use
- Ambient temperature: + 5 °C to + 40 °C
- Storage temperature: - 10 °C to + 50 °C
- Relative humidity: 20% to 80% - non-condensing
- Atmospheric pressure: 700 to 1060 hPa
- Height above sea level: Max. 3000 meters
- Approvals: IEC60601-1, ANSI/AAMI ES60601

Recommendations

- If emergency stop is pressed whilst charging, the batteries will not be charged.
- When charging, the CBJ Home will not be able to operate any actuators.
- For recharging the batteries, use charger CH01 (charger has to be ordered separately).
- Note: Always mount the CBJ Home with the channel sockets facing downwards
- The CBJ Home is not intended for use with "*buffer*" type actuators such as LA28 and LA32.
- The actuator must always be fitted with an exchangeable cable (mini-fit) socket.
- Actuators on channel 1 must always be with spline.
- The mains cables must always be ordered separately when ordering a CBJ with an internal charger.
- Use only original LINAK mains cables to ensure proper connection to internal charger.
- Always use fully charged batteries for learning mode procedures.
- Only an authorised LINAK service centre should change a battery in a CBJ Home. If a CBJ Home is opened and a battery is changed by unauthorised personnel, there may be a risk of malfunction
- When using the control box with emergency stop button, the stop button must be released before charging batteries or before the application is put into operation
- It cannot be guaranteed that the actuator will stop exactly at the weight that is stored as the motors in the actuators will use less current when run in. Though it will never reach the 1.5 times max. load as the norm states.
- Tolerance for current cut off is: +/-10 %
- The maximum cut-off value that can be registered (stored) is 8 Amp.
- If an actuator or CBJ Home is exchanged it will be necessary to reset the max. load to ensure the correct cut-off value for the new system as a whole.
- The registration function can only be activated by using a specially produced hand control (HB7X161-00). A standard hand control cannot activate the function.
- To operate the "*Learn mode*" function in External charger versions produced before February 2010 press the "R" button when "*learning*" (the lifting arm actuator will operate automatically). With all other versions (and future versions with external charger) both the "R" button and the "*lifting arm*" button need to be pressed.
- It is possible to use the "*learn mode*" function for channel 2: To operate the learn mode function for channel 2, press the "R" button and the "*leg spread out*" button at the same time. Run actuator with load and full cycle to record maximum current during a cycle.

Warning

- In order to avoid injury, the emergency stop should be activated in (all) transport situations.
- When "*learn mode*" is used, and channel 2 is pressed instead of channel 1, the CBJ Home will learn a new current limit of nearly 0 Amp. This will make it impossible to run the actuator with channel 2 until a new learn mode has been programmed.

Mounting information:

The CBJ-Home is mounted by means of 2 screws:
Type ISO4762-M6x90-8.8 (not supplied by LINAK)

Spares information:

The cable lock kit consists of the following 3 items:

- 2 x screws
- 1 x blind plug for ch. 2 if not in use
- Cable Lock

All the cable lock items are included when ordering the kit, article number: 0898001-B.

The mounting screws for the control box and the charger must be tightened with a maximum torque of 1 Nm.

6. COBO (MEDLINE® CARELINE®)

The COBO is an interface box specially developed for use together with the JUMBO battery pack (BAJ1/BAJ2 and BAJL Li-Ion) and the CU20 control unit. It is also possible to connect other 24V lead acid customer batteries or fixed power supply.

Safety:
The COBO has a monitoring circuit for the FET transistor. If the FET is damaged the CU20 will go into fatal error mode. In this case the COBO is defective and must be replaced.

Usage:

- COBO with internal charger: Nominal current draw max. 400 mA
  Power consumption (standby) max. 2.5 W
  Power consumption (charging) max. 19 W
- Compatibility: LINAK Batteries BAJ1, BAJ2 (24 V, 2.9 AH) or other 26 - 28 V power sources via customer battery connection.
  LINAK Lithium Ion battery (BAJL Li-Ion)
- Duty cycle: 10 % 2 minutes running and 18 minutes rest
- Operating temperature: +5 °C - +40 °C
- Storage temperature: -10 °C - +50 °C
- Relative humidity: 20% to 80% - non-condensing
- Atmospheric pressure: 700 to 1060 hPa (3000 m)
- Height above sea level: Max. 3000 meters
- Approvals: The COBO is EMC designed and approved in accordance with IEC60601-1, ANSI/AAMI ES606011 and CAN/CSA-22.2 No 60601-1

Functionality:
COBO with internal charger has a green and a yellow light.

Diode colour	Functionality
Green is on	COBO is connected to mains
Yellow is on	COBO is charging. The yellow LED is constantly on until batteries are fully charged.

The CU20 will shut down after 2 minutes to save power.

Accessories depending on V-permanent when the system is inactive will not work.

The CU20 controls whether or not activation should be allowed during charging.

Please note that the CU20 SW must ensure that there is no movement during charging when using COBO with internal charger.

Guidelines regarding emergency STOP and battery state re-calibration:

- The emergency stop button is not designed to be used as an on/off button.
- When using the emergency stop button, the system may shortly not be ready for use:
  - In normal situations waiting time for restarting the system is less than 5 seconds
  - In situations of shortly activating and then deactivating the emergency stop, the waiting time for battery state re-calibration can be up to 30 seconds.
- If a handset key is pressed during the re-calibration period, the control box may indicate with an audio signal, that the SW measures the battery condition. The user must wait until the re-calibration is finalized to be able to operate the system again.

Mounting
Special care should be taken when mounting the COBO.
As long as the COBO is mounted correctly then the COBO complies to IPX5 (IPX4 with internal charger).
If the COBO is mounted incorrectly then water will gather around the screw holes resulting in non-compliance with IPX5 (IPX4 with internal charger).

When using the control box with emergency stop, the stop button must be activated in cleaning situations in order to comply with IPX5.

The battery pack BAJ1 or BAJL must not be removed in cleaning situations, doing so could result in non-compliance with IPX5.

If the COBO is fitted with option EC (DC poser connector), the protection plug ex. 00918174 must always be inserted to ensure IP protection, if the port is not used.

IP rating only applies when the battery is connected to the control box.

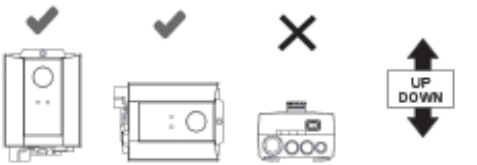

Recommendations

- Choose CU200XXXXX2XXXX if positioning/memory function is to be used.
- It is recommended that the COBO is serviced according to the relevant national norms for the applications in which it is used, however all electrical parts must be checked at least once a year.
- The COBO should be cleaned regularly, in order to maintain good hygiene. It is not allowed to use chemicals to clean the box.
- Only use COBO together with CU20.
- When specifying special CU20 software, be sure to set "*Operation allowed during charging*" to YES, if customer batteries or fixed power supply is used.

Warnings

- Pay attention to the polarity of the customer battery cable - red is positive voltage.
- In order to avoid injury, the emergency stop should be activated in (all) transport situations.
- If 24V lead acid customer batteries or fixed power supply is used, the supply source must comply with *"Means Of Patient Protection"* and *"Means Of Operator Protection"* in accordance with the Medical Safety Standard.
- If 24V lead acid customer batteries or fixed power supply are used, the customer must ensure that EMC values are kept in accordance with regulations.
- The CU20 power port/channel 7 cannot be used with COBO.
- Max 1 ACT can be connected to the COBO system.
- The COBO is not to be used in agricultural or maritime applications or be connected directly to a vehicle battery.

7. CH01 (MEDLINE® CARELINE®)

For charging the batteries of CB08-XA and all JUMBO control boxes, directly connected to the control box or via the hand control HB40A.

For charging of the batteries in battery box BAJ2 (JUMBO system) and CBJH.

8. CHJ2 (MEDLINE® CARELINE®)

The charger CHJ2 has been specially designed for use as a wall-charger for the JUMBO system.
The CHJ2 charger is a Switch Mode Power Supply (SMPS) version which makes charging of the batteries more efficient.
BAJ1 and BAJL (standard) battery pack have a reduced charging time.
Mains voltage from 100 V AC - 240 V AC (50/60 Hz) is possible on same charger.
The charger indicates whether the charger is connected to the mains (green LED) or whether the battery is being charged (yellow LED).
Medically approved.

Usage:

- Nominal current draw: Max. 400 mA
- Power consumption (standby): Max. 2.5 W
- Power consumption (charging): Max. 19 W
- Ambient temperatures: + 5 °C to + 40 °C
- Storage temperature: - 10 °C to + 50 °C
- Relative humidity: 20% to 80% - non-condensing
- Atmospheric pressure: 700 to 1060 hPa
- Height above sea level: Max. 3000 meters
- Approvals: IEC60601-1, ANSI/AAMI ES60601 and CAN / CSA-22.2 No 60601-1

9. MBJ1/2/3 (MEDLINE® CARELINE®)

Depending on of what your JUMBO system consists you need to use one of the following three mounting brackets. IP protection is only valid when the JUMBO system is mounted vertically.

All three brackets include matching screws (IPX1, IPXX and IPX5 are delivered with stainless screws). The mounting screws for the control box, charger must be tightened with a maximum torque of 1 Nm.

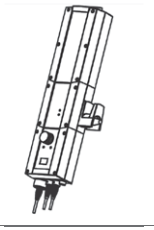		**MBJ1** For use together with CBJ1 or CBJ2 or CBJC, CHJ2 and BAJ1 or BAJ2. I. e. when combining control box, charger and battery pack MBJ1 has to be used.
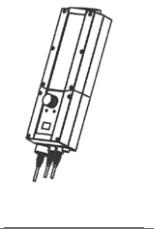		**MBJ2** For use together with CBJ1 or CBJ2 or CBJC, and BAJ1 or BAJ2. I. e. when combining control box and battery pack MBJ2 has to be used.
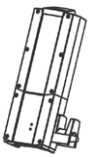		**MBJ3** For use together with CHJ2 and BAJ1 or BAJ2. I. e. when combining charger and battery pack MBJ3 has to be used.

8. Information on specific accessories

If the actuator is to be equipped with accessories, these must be specified when ordering the actuator from LINAK. There are the following possibilities:

1) TR6/TR7 External transformer
If the TR6 or TR7 fixed cable connection becomes damaged the transformer must be replaced.

1. BA16 Lead acid (MEDLINE® CARELINE®)

The battery box BA16 is developed for use together with the LINAK CA and CO control box series to support power backup.

Usage:
- Compatibility: Battery back-up for COxx and CAxx
- Duty cycle: 10%, 2 minutes continuous use followed by 18 minutes not in use
- Charging: Via integrated charger
- Charging time: Approx. 6 hours
- Recharging during storage:
  Battery recharging no later than 6 months after production date stated on the label
- Operating temperature: +5 °C to +40 °C
- Storage temperature: -10 °C to +50 °C
  The batteries must be stored in an applicable storage room to avoid direct sunlight
- Relative humidity: 20% to 80% - non-condensing
- Atmospheric pressure: 700 to 1060 hPa
- Height above sea level: Max. 3000 meters
- Service: Battery replacement
- Approvals (pending): IEC60601-1, ANSI/AAMI ES60601-1, CAN/CSA-22.2 No. 60601-1
  UL tested in accordance with UL60601-1 (pending)

LED functionality:

LED	Indication of operation
Solid yellow	Charging (battery not ready)
No LED light	Fully charged (battery ready)
Flashing yellow	Error during charging

Buzzer functionality:
The buzzer will make a warning when a button on the hand control is pressed and the battery capacity is low.
The buzzer can also be activated by an intelligent control box to signal other conditions. This must be specified in the control box software.

Mounting instructions:

BA16 must be mounted with M4 screws due to the battery weight.
Make sure the surface touching the BA16 mounting surface is flat and use all 4 screws.

The diameter of the screw cap must be maximum 8mm.

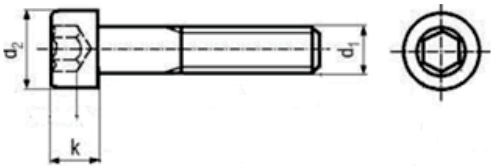

d_1	M4
$d_{2\ max}$	8
k	4

According to ISO 2009

Cable

Cable	Mini-fit (4 pole) with angle to Mini-fit (4 pole) straight For cable details see chapter 4.1.4/see cable configurator
Cable lock	0273044

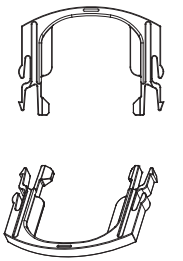

Recommendations:

- Do not exceed the storage temperature as it will shorten the product life and reduce performance.
- Allow the battery to settle to room temperature before use.
- Do not exceed the duty cycle 2/18 as it will shorten the life, reduce performance, and eventually activate overcurrent protection.
- BA16 is not intended for use in outdoor applications.
- If the battery is completely discharged, then recharge the battery before storage.
- Inspect at regular intervals that the ventilation aperture is positioned correctly and is intact throughout its length.

Safety feature

- BA16 contains overcurrent protection for safety and to protect itself from being damaged due to excessive use.
- When current protection is activated, no power output will be available.

Warnings

- Loss of power might happen due to activation of overcurrent protection. In this event, there may be no warning and the application may not be able to move when expected.
- Defective or damaged batteries may leak acid and adequate precautions must be taken during handling and transportation.
- Do not open the battery case as damage to the cell or circuitry may develop excessive heat.
- It is important for users to read the guidelines in the "*User Manual Linear Actuators and Electronics*".
- Do not short circuit the battery.
- Use the specified internal charger only.
- If disposed to fire, the battery may explode.
- The battery box BA16 itself may not be combined with an external charger.

If product caution is not clearly visible on the final application at low light intensity, the above mentioned warnings must be integrated in the application manufacturer manual.

The application manufacturer must test the application and ensure that neither intended nor unintended use exceeds the battery specification.
The application manufacturer must assure other means of movement, e.g. quick release or manual lowering in case of battery failure.

Compatibility:
The BA16 has a built-in charger and is therefore not able to operate with control boxes with charger. Be aware that the BA16 is only compatible with CAxx and COxx.

BA16 safety:
LINAK batteries for medical use are designed and manufactured to be safe throughout the product life. LINAK has performed various battery tests in normal use, abuse, and failure situations to verify design and production methods. These tests have not shown any unacceptable risks.

The batteries are UL-tested to verify the safety of the design and to obtain a safety certificate from an independent organisation.
This means that UL regularly inspects the factory to check that standards are complied with.

2. BA18 (MEDLINE® CARELINE®)

The BA18 is a cost-effective lead acid battery without integrated charger that is used in combination with the long-established control box range: CB6, CB9, CB12, and CB6S.
Easy replacement of the battery due to plug connection towards the control box.

Usage:

- Compatibility: CB6, CB9, CB12, CB6S
- Ambient temperature: +5°to +40°C
- Charging: Via LINAK control box with integrated charging circuit
- Charging time: Approx. 6 hours depending on built-in control box charger
- Recharging during storage: Battery recharging no later than 6 months after production date stated on the label
- Operating temperature: +5 °C to +40 °C
- Storage temperature: -10 °C to +50 °C
- Relative humidity: 20% to 80% non-condensing
- Atmospheric pressure: 700 to 1060 hPa (3000 m)
- Meters above sea level: Max. 3000 meters
- Approvals: IEC60601-1, ANSI/AAMI ES60601-1, CAN/CSA-22.2 No. 60601-1

To ensure free passage of gasses when the battery is mounted on a flat surface the back side of the battery has been supplied with venting channels see below figure.

Venting channels and membrane on BA18:

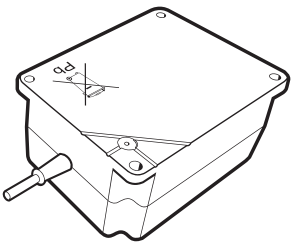

Check with regular intervals that the venting channels are unblocked.

Warnings:

- The battery case is only to be opened by authorised staff as incorrect handling may compromise the IP protection.
- Take care to always keep the venting channels free. Mounting plates must be rigid to prevent blocking of the venting channels.
- Do not use third party chargers.

Recommendations:

- Allow the battery to settle to room temperature before use.
- The batteries must be stored in an applicable storage room to avoid direct sunlight.

3. BA19 Lead acid (MEDLINE® CARELINE®)

The BA19 lead acid backup battery has been developed specifically for use with the new control boxes CA30/CA40 and CO61. It is a compact and cost-efficient battery with built-in charger and cable management.

Usage:

- Compatibility: Battery backup for CA/CO control box platform
- Duty cycle: 10%, 2 minutes continuous use followed by 18 minutes not in use
- Charging: Via integrated charger
- Charging time: Approx. 6 hours
- Recharging during storage: Battery recharging no later than 6 months after production date stated on the label
- Operating temperature: + 5 °C to + 40 °C
- Storage temperature: - 5 °C to + 40 °C
  The batteries must be stored in an applicable storage room to avoid direct sunlight
- Relative humidity: 20% to 80% - non-condensing
- Atmospheric pressure: 700 to 1060 hPa (3000 m)
- Height above sea level: Max. 3000 meters
- Service: Battery cells cannot be replaced as the battery cover cannot be closed properly afterwards
- Approvals (pending): IEC60601-1:2005 3rd edition,
  ANSI/AAMI ES60601-1: 2005, 3rd edition
  CAN/CSA-22.2 No. 60601-1:2008

LED functionality:

What does the LED indicate?

LED	Indication of operation
Solid orange	Charging (battery not ready)
No LED light	Fully charged (battery ready)
Flashing yellow	Error during charging

Buzzer functionality:

The buzzer will make a warning when a button on the hand control is pressed and the battery capacity is low.

The buzzer can also be activated by the control box to signal other conditions. This must be specified in the control box software.

Mounting instructions:

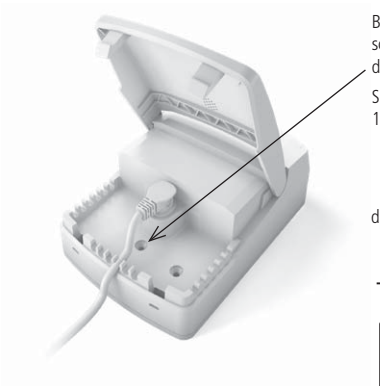

BA19 must be mounted with attachment screw and mounting bracket (see below) due to the battery weight.

Screw M4 countersunk torque 1.1 Nm +/- 0.1 Nm.

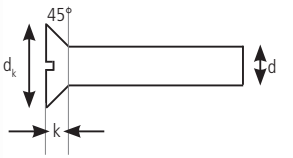

d	M4
d_k	8.4
k	2.7

According to ISO 2009

Mounting bracket (frame flat) - article no. 1015W1001:

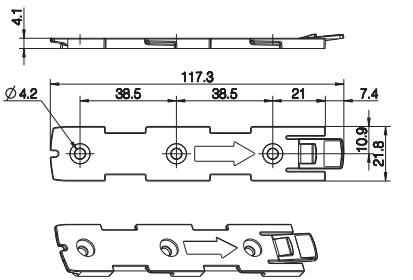

Recommendations:

- Do not exceed the storage temperature as it will shorten the product life and reduce performance.
- Allow the battery to settle to room temperature before use.
- Do not exceed the duty cycle 2/18 as it will shorten the life, reduce performance, and eventually activate overcurrent protection.
- BA19 is not intended for use in outdoor applications.
- If the battery is completely discharged, then recharge the battery before storage.

Safety feature

- BA19 contains overcurrent protection for safety and to protect itself from being damaged due to excessive use.
- When current protection is activated no power output will be available.

Warnings

- Loss of power might happen due to activation of overcurrent protection. In this event, there may be no warning and the application may not be able to move when expected.
- Defective or damaged batteries may leak acid and adequate precautions must be taken during handling and transportation.
- Do not open the battery case as damage to the cell or circuitry may develop excessive heat.
- It is important for users to read the guidelines in the "*User Manual Linear Actuators and Electronics*".
- Do not short circuit the battery.
- Use the specified charger only.
- If disposed to fire, the battery may explode.

If product caution is not clearly visible on the final application at low light intensity, the above mentioned warnings must be integrated in the application manufacturer manual.

The application manufacturer must test the application and ensure that neither intended nor unintended use exceeds the battery specification. The application manufacturer must assure other means of movement, e.g. quick release or manual lowering in case of battery failure.

Compatibility:
The BA19 has a built-in charger and is therefore not able to operate with control boxes with charger. Be aware that the BA19 is compatible with CA30, CA40, CA63, CO41, CO61, CO65 and CO71.

4. BA21 Li-Ion (MEDLINE® CARELINE®)

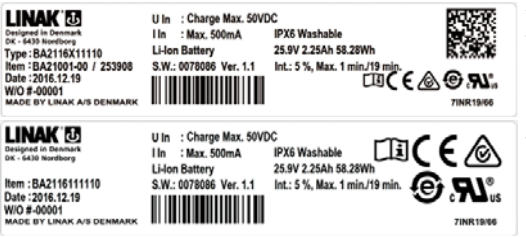

The BA21 Li-Ion back-up battery pack has been specially developed for use with the new control boxes COxx and CAxx, e.g. CO61 and CA40, etc. It is a low weight battery with built-in charger and high performance and safety.

Features and Options

Weight:	0.7 kg
Housing colour:	Light grey (RAL 7035)
Protection class:	IPX6 Washable
Packaging:	Every battery is packed individually and is fitted with lithium caution (transportation requirement)
Classification:	Internally powered

Usage:

- Compatibility: Battery back-up for CO and CA control boxes
- Duty cycle: 5 %, 1 minute continuous use followed by 19 minutes not in use
- Charging: With integrated charger in battery
- Charging time: Approx. 10 hours
- Recharging during storage: First recharge of the battery must be no later than 12 months after production date stated on the label. Hereafter the battery must be recharged at least every 12 months.
- Operating temperature: + 5 °C to + 30 °C
- Storage temperature: - 10 °C to + 40 °C (+ 10 °C to + 25 °C recommended) The batteries must be stored in an applicable storage room without direct sunlight.
- Relative humidity: 20% to 80% - non-condensing
- Atmospheric pressure: 700 to 1060 hPa (3000 m)
- Height above sea level: Max. 3000 meters
- Approvals: IEC60601-1, ANSI/AAMI ES60601-1, CAN/CSA-22.2 No 60601-1, IEC62133, UL2054, UN38.3 (needed for transport of lithium batteries)

LED functionality:

LED	Indication of operation
Solid yellow	Charging
No LED light	Fully charged
Flashing yellow	Error during charging

Buzzer functionality:

The buzzer will make a warning when a button on the hand control is pressed and the battery capacity is low. The buzzer can also be activated by the control box to signal other conditions. This must be specified in the control box software.

Mounting instructions:

The Battery Pack BA21 can be mounted in several ways on the bed/the application, either separately or together with the control box CO61.
It is however not allowed to mount the battery in vertical position with the mounting clip pointing upwards - see illustration :

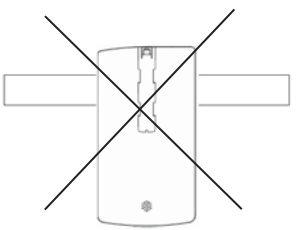

- Disconnect the mains cable to the application at the power outlet.
- Remove the power cable from the control box by inserting a screwdriver into the locking clip marked.

- Release the control box off the application by pressing the tab on the mounting clip.

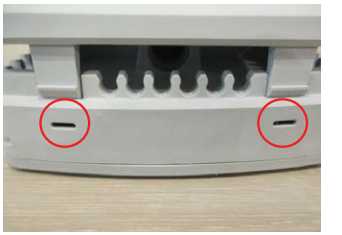

- Open the lid to the control box by releasing the locking clips.

- If you disconnect any actuator cables or hand control cables, please take note of the correct ports.

- Open the lid to the battery box by releasing the locking clips.

- Open the lid for access.

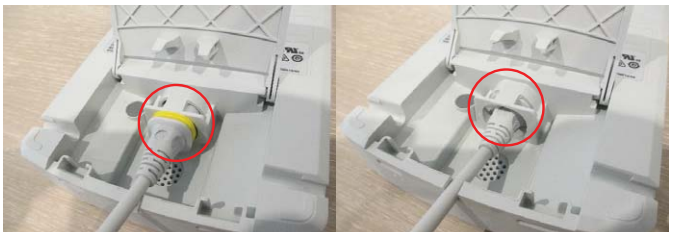

- Insert the battery connection cable supplied in the battery port.
- Ensure that it is fully connected.

- Close the lid, ensuring that the locking clips engage fully when securing the lid.

- Connect the battery to the application, ensuring that the locking clip is fully engaged.

- Connect the battery to the application, ensuring that the locking clip is fully engaged.

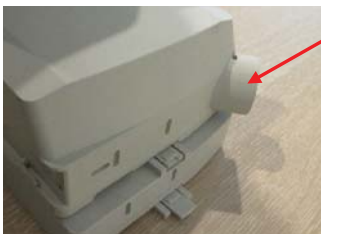

- Connect the control box to the battery, ensuring that the locking clip is fully engaged.

- If the clips are not engaged fully, the tab will be sticking out as indicated.

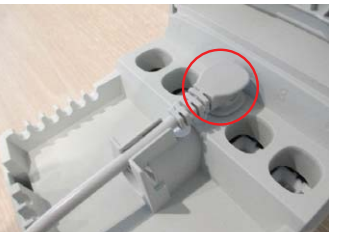

- Insert the battery connection cable into the battery port in the control box.
- Ensure that it is fully connected.

- Reconnect any actuator cables or hand control cables to the correct ports.

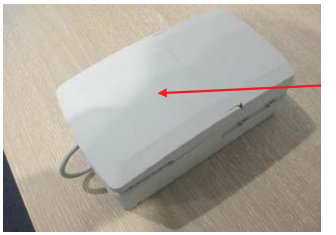

- Close the control box lid, ensuring that the locking clips fully engage.

- Reconnect the mains cable to the control box, ensuring that the locking clip engages.
- Turn on or reconnect the mains outlet.

Deep discharge protection

- The BA21 Li-Ion has a deep discharge protection to protect the battery life. The deep discharge protection is activated when the battery is discharged.
- Charge the battery to exit the deep discharge mode. Ensure that the battery is sufficiently charged before use.

If the battery is completely discharged, the charging will be started at a very small rate to protect the battery. In this case the yellow LED will be flashing. If the battery does not stop flashing and start charging normally within 12 hours (LED ON), the battery is defect and must be disposed according to disposal instructions.

If any and all of the lithium ion batteries built into LINAK products are found to be defective under warranty, LINAK will provide a new product to the OEM. LINAK explicitly disclaims all other remedies. LINAK shall not in any event be liable under any circumstances for any special indirect punitive incidental or consequential damages or losses arising from any incident related to the inherent risk of thermal runaway in the lithium ion cell and any use of LINAK products. Moreover, LINAK explicitly disclaims lost profits, failure to realise expected savings, any claim against our customer by a third party, or any other commercial or economic losses of any kind, even if LINAK has been advised of the possibility of such damages or losses.

Transportation

The lithium ion batteries must be packed and transported according to applicable regulations. Always ask your local transportation provider how to handle the transportation of lithium ion batteries.

Recommendations:

- Do not exceed the storage temperature as it will shorten the product lifetime and reduce performance.
- Allow the battery to settle to room temperature before use or charging.
- Do not exceed the duty cycle 1/19 as it will shorten the lifetime, reduce performance, and eventually activate over temperature protection.
- BA21 Li-Ion is neither intended for use in outdoor applications, pool environments nor other harsh environments.
- If the battery is completely discharged, then recharge the battery before storage.
- Only charge with applicable LINAK control boxes.

Safety feature
BA21 Li-Ion contains several mechanisms to protect itself from being damaged due to excessive use.
In case of overheating, the device will activate a thermal protection. No power output will be available until the temperature has returned to normal operating range. Overheating may occur by extensive use at high temperature or by exceeding the 1/19 duty cycle.

BA21 safety
LINAK Li-Ion batteries for medical use are designed and manufactured to be safe through the product life. LINAK has performed various tests of the batteries in normal use, abuse and failure situations to verify the design and production methods. These tests have not shown any unacceptable risks.

The batteries are UL-tested to have an independent organisation verify the safety of the design and to obtain a safety certificate. This means that UL regularly inspects the factory to check that standards are complied with.

UL has tested in accordance with the following standards:

UN38.3 Battery Transportation Safety

IEC62133 Battery Safety

UL2054 Standard for Household and Commercial Batteries

Compatibility:

The BA21 has a built-in charger which means that it cannot operate with control boxes with charger, e.g. CB6 and similar. The BA21 is compatible with CA30, CA40, CA63, CO41, CO61, CO65 and CO71.

Warnings:

Lithium ion batteries differ from the lead acid technology as they have a built-in deep discharge protection.

- Loss of power might happen due to the battery deep discharge protection and will only happen in case of continuous use of the battery despite warnings. In this event, there may be no warning and the application may not be able to move when expected.
- In the risk analysis for the final application, the manufacturer must take into consideration how to ensure alternative means to make movement, e.g. quick release or manual lowering.
- Do not open the battery housing as damaging the cell or circuitry may develop excessive heat.
- Lithium ion batteries that are defective, have been damaged or might produce excessive heat or fire are not allowed for transportation. (contact your local transportation provider)
- If product caution is not clearly visible at low light intensity, read the product label instructions symbol. A warning must be included in the application manufacturer's manual for the medical device.
- For safety reasons, please adhere to the indicated charging and operation temperature.
- In case the battery turns hot, disconnect it and evacuate the room and wait for 2 hours before taking further steps.
- Follow the mounting instructions in order to avoid exposing batteries to water.
- Recharge batteries every 12 months at a minimum.
- Dispose of batteries in accordance with local regulations.
- The application manufacturer must test the application and ensure that intentional and unintended operations do not exceed the battery specification limits. The application manufacturer must assure other means of movement, e.g. quick release or manual lowering..

DO NOT:
- heat or burn the battery
- short circuit the battery
- expose the battery to high impact
- crush or puncture the battery
- use batteries with signs of damage or corrosion
- charge or store the battery near combustible material
- expose the battery to water or other liquids

6. CS16 (TECHLINE®)

The CS16 electronic limit switch is connected between the LINAK® actuator and a non-LINAK power supply, where it cuts out the current to the actuator in end position of if an obstacle is encountered. The PCB contains a variable current limit setting and is available in different versions, depending on the actuator with which it is to be used.

The CS16 should be connected between the linear actuator and the power supply, where it will switch off the power when the actuator reaches end position or if the actuator is overloaded.

As the CS16 are open PCB's, they have to be installed in an encapsulation to prevent damage. (LINAK® offers one type of encapsulation for CS16).

Adjustment of CS16

The CS16 has a rotary potentiometer for adjusting the value of the cut-off current. To obtain the correct cut-off current, connect the CS16 and turn the potentiometer as far as it will go/anticlock wise to set the maximum cut-off current.

Then subject the actuator to the maximum load it will be exposed to in the application. At the same time turn the potentiometer clockwise, reducing the cut-off current, until the actuator stops (not in end position).

Then turn the potentiometer approx. quarter of a turn anti-clockwise and the system is ready for use.

As the CS16 is a open PCB's, it have to be installed in an encapsulation to prevent damage. (LINAK® offers one type of encapsulation).

7. DJB (MEDLINE® CARELINE®)

The DIN Junction Box is designed for use where there is a need for more than 1 or 2 controls to be connected to a control box.
The DIN Junction Box is constructed for connection of up to 4 controls with 8-pin DIN plugs. Furthermore, the box is constructed so that all channels for connetion are placed on the same side of the box.
This gives the box a clean design and makes it easy to mount e.g. in a bed frame.

Usage:

- Compatibility: CB8, CB9, CB12, CBJ and OpenBus™ control boxes
- Operating temperature: +5 C to +40 C
- Storage temperature: -10 C to + 50 C
- Relative humidity: 20% to 80% non-condensing
- Atmospheric pressure: 700 to 1060 hPa
- Operational meters above sea level: Max. 3000 meters
- Latex free: Yes
- Approvals: IEC 60601-1
  ANSI/AAMI ES60601-1
  CSA CAN/CSA-C22.2 NO. 60601-1
  IEC 62366

8. EBC - Electronic Brake Control System (MEDLINE® CARELINE®)

The EBC - Electronic Brake Control - is designed for use together with 3rd party castors and the control systems CB OpenBus™, including JUMBO Care. The EBC can replace traditional (mechanical) central locking systems for castors on healthcare beds or medical applications. This new system offers an increased freedom of application design as there is no need for a mechanical connection between the castors.

Usage:

- Operating temperature: 5 °C to 40 °C
- Storage temperature: - 10 °C to 50 °C
- Compatibility: CBJC, CB6 OBF, CB6 OBMe, CB16 or CB20
- Fallshaw EBC system approved according to IEC60601-1:2005 3rd edition approved, ANSI / AAMI ES60601-1:2005, 3rd edition, and CAN / CSA-22.2 No 60601-1:2008 Manner / TENTE approvals are pending

Recommendations

- The customer shall ensure proper connection between the EBC and the castors. Missing or interrupting some of the individual wires between the EBC and the castor may under some circumstances cause damage to the internal circuitry of the EBC.
- Always use locking mechanism and O-ring on cables.
- If any open sockets, they must be fitted with blind plugs to ensure IP degree.
- Removing or adding any OpenBus™ cables is not allowed when the control box is powered (hot plugging).

Before installation/service

- Stop the application.
- Remove battery power cable and OpenBus™ connection then possible castor connection.
- Service system.

After installation/service

- Reconnect castor connection, then OpenBus™ connection, battery power cable, then control box mains.

LINAK A/S only delivers the OpenBus™ system and is not responsible for any products other than LINAK products (i.e. products from 3rd party suppliers or the compliance of such products with the LINAK OpenBus™ system).

9. Massage Motor Medical (MEDLINE® CARELINE®)

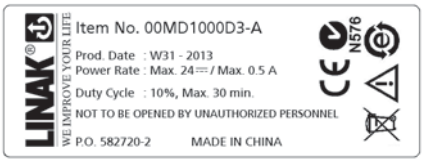

The massage motor can be added to all kinds of couches and tables, chairs or beds for treatment and examination. It enables comfort, relaxation and tension release for patients and clients. The massage motors are directly connected to the actuator port at the control box – no extra wiring at the application, simple and easy mounting.

Usage:

- Compatibility: CB6 OBMe, CB16 OBF, (CB20 pending) MJB006-0x to be used for OpenBus™ impulse drive
- Duty cycle: 10 %, 30 min. max.
- Operating temperature: + 5 °C to + 40 °C
- Storage temperature: - 10 °C to + 50 °C
- Relative humidity: 20% to 80% - non-condensing
- Atmospheric pressure: 700 to 1060 hPa (3000 m)
- Height above sea level: Max. 3000 meters
- Approvals: Medical approvals to be determined

Mounting:

Massage motor on a plate

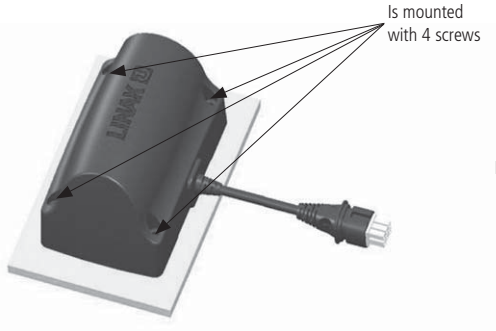

Mounting of the screw with max. torque 2 Nm

Mounting of massage motor by using brackets:

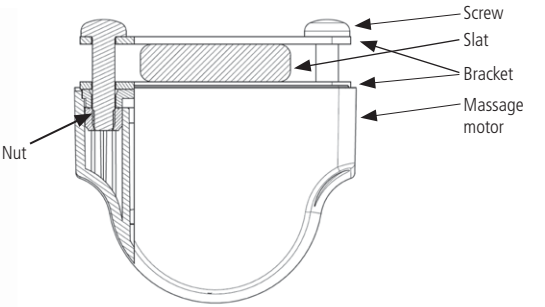

The massage unit is mounted with 4 x M6 roundheaded machine screws with flat underside. 15 to 20 mm long + the thickness of the bracket. Torque max. 2-3 Nm.

2 brackets must be used - one on each side of the slat.

10. MJB (MEDLINE® CARELINE®)

The MJB (Modular Junction Box) is designed for use together with OpenBus™ control boxes.
The MJB makes it possible to connect multiple hand controls, attendant controls or it is also possible to use the MJB as a control unit for 3rd party products such as Out of Bed Detection, USB charger, Under Bed Light etc.

11. MJB8 (MEDLINE® CARELINE®)

The MJB8 modular junction box is a central unit in the "Intelligent Care Bed", connecting various intelligent accessories, such as the Out Of Bed and WET detection, and sending notifications via a range of optional gateways to the user (i.e. caregiver)

Recommendations

- Always use locking mechanism and O-ring.
- Sockets that are not used must be fitted with blind plugs (Item P/N.: 0821008) to ensure IP-degree.
- When using the modular plug cable with an open end, the customer is responsible for maintaining the IP degree.
- When mounting, ensure that a screw torque limit of 1 Nm is not exceeded.
- 3rd party products must correspond to all requirements stated in the MJB8 Interface description for 3rd party products in order to avoid damage/ malfunction.
- The Under Bed Light (Item P/N.: 0964135) must be mounted on the bed with metal screws in order to maintain ESD protection.
- HOT PLUGGING
  Removing or adding any OpenBus™ cables are not allowed when the control box is powered by mains supply!
  Follow the below procedure:
  1. Remove mains and wait 5 seconds
  2. Mount or dismount the required cables

  If this procedure is NOT followed it may result in a damaged OpenBus™ driver circuit.
  The risk of a damaged circuit increases if the accessory has a high start current.
- Before the final functional production test, it is important that the system is repowered.
  This is to ensure, that all items have been detected on the OpenBus™.
- It is important to test the specified notifications in order to ensure that they work correctly before sending the system to the end user.
- The MJB8 is intended for mains operation only. The user must be informed that all MJB8 sensor notifications are disabled when the system is in battery mode.

Warnings

- LINAK only takes responsibility for LINAK products, not 3rd party products.
  Please pay attention to the *"Patient Environment"* Clause 3.79 – EN60601-1 3rd edition. It must be subject to the Risk Analysis.
  It is important to inform the customer about this.
- The MJB8 is not able to detect defective 3rd party products.
  We recommend the end user to make a regular test procedure in order to prevent hazardous situations for the user and failures to the system.
- The MJB8 and the attached accessories (i.e. Out Of Bed or WET detection) are not intended as life-supporting or emergency equipment.
  They are only intended to support notifications for communication and comfort purposes of people in need of care.

12. Simulator tool (MEDLINE® CARELINE®)

The Simulator Tool is a software that can be used to simulate hand control functions on OpenBus™ and analogue actuator systems. With the Simulator Tool, sequences of actuator movements can be programmed and repeated in order to test actuator systems.

USB to OpenBus™ gateway:

The gateway acts as an interface between the Simulator Tool Software and the OpenBus control box.

Together with the Simulator Tool Software, it can be used for test and demo purposes only.

It is not allowed to use the product as a control in any commercial application.

It has a USB B-input connection from the computer/laptop.

As output connection it has an RJ45 jack plug for connection to the control box.

The gateway is powered through the OpenBus connection to the control box.

The housing has 3 LEDs on the front.

OpenBus : This LED indicator shows if connected to OpenBus system. (power indicator)

: This LED indicates that USB is connected
(Requires power from the OpenBus connection to work).

PRQ : This LED indicates that active power request is active.

Limitations:

Note that an OpenBus system that has powered down (8 V missing) cannot be woken up by the USB to Openbus gateway!
Although the USB to Openbus gateway sets a keep power bit, it might be neglected by some control boxes that will power down after a period of time. (Typically 2 minutes)

For cycle testing of such systems (typically battery equipped), that powers down during the cycle, a special control box software that has been stripped for the power down feature is needed.

Warnings:

- The LINAK Simulator Tool is to be used as a test tool or demo tool only. It is not allowed to use the software and accessories as a control in any commercial application.
- Potentially dangerous situations resulting from automated movement generated by the Simulator Tool Software must be considered and assessed before starting any action.
- Please note that over time the actual movement of an actuator within a fixed activation time may vary due to changed friction inside the actuator or especially when a battery-driven system loses power.
  Close inspection and required adjustment is necessary to obtain the wanted movement over time and to avoid potentially dangerous situations.
- The generated test report itself is not a legal proof that a system has physically moved the actuators the number of times stated and cannot be used as such.
  The time of activation listed in the report generated is not necessarily the same as the time of actuator movement. It just shows how long the function has been activated (equal to the time you have pressed the button on the hand control).
  The actuator can be in end-of-stroke position or the function can be locked and therefore the actuator itself doesn't move.
  It is recommended to use a physical counter or similar to verify the actual actuator movement.

Recommendations:

- See to it that sufficient pauses are kept between activations, so that the duty cycle of each actuator type is respected.