USER MANUAL

HOMELINE®
IMPROVING COMFORT

TWINDRIVE®
TD32 / TD33

To learn more about LINAK, please visit:

WWW.LINAK.COM

LINAK®
WE IMPROVE YOUR LIFE

Contents

Preface 4
Important information 5
Safety instructions 5
Before installation, reinstallation or troubleshooting 7
Before start-up 7
During operation 7
Misc 7

Only for EU markets 8
Only for Non EU markets 8

Repairs 9

Misc. on the TD3 TWINDRIVE® system 10
Description of the TD3 TWINDRIVE® system 10

Connections 11
Mains inlet 11

Cable relief 12

Mounting guidelines for the TWINDRIVE 13
Functional description 14
Start-up - How to install the RF handset 15
Connections of LA27 actuators 16
Child lock function - only for HB20RF 17
Frequency tuning (FT) 18
Disturbance of RF signals 19
Massage systems 20
Mounting instructions for the massage motor 24
Accessories 26
Changing of batteries 27
Emergency lowering function: (optional) 27
Welding the twist bracket on the frame 29

Labels 30
Disposal of LINAK products 31
Disposal of batteries 30
Drawing appendix 33

Manufacturer's declaration 38
LINAK application policy 39
Addresses 40

Preface

We are delighted that you have chosen a product from LINAK A/S. LINAK systems are high-tech products based on many years of experience in the manufacture and development of actuators, electric control boxes, controls and chargers. We are also constantly improving our products to meet customer requirements.

This User Manual will tell you how to install, use and maintain your LINAK TWINDRIVE® products.

We are sure that the TWINDRIVE® products will give you many years of trouble-free operation. Before our products leave the factory they undergo a full function and quality test. Should you nevertheless experience problems with your systems, you are always welcome to contact our service departments or service centres.

LINAK subsidiaries and distributors all over the world have authorised service centres, which are always ready to help you.

LINAK provides a warranty on all its products. This warranty, however, is subject to correct use in accordance with the specifications, maintenance being done correctly and any repairs being carried out at a service centre, which is authorised to repair LINAK products.

Changes in installation and use of LINAK systems can affect their operation and durability. Therefore, changes must only be made according to agreement with LINAK A/S and changes are made at your own risk.

LINAK A/S

Informations importantes

Les informations importantes sur les produits LINAK® peuvent être trouvées dans les rubriques suivantes:

Attention!
Le non respect de ces instructions peut entraîner des accidents impliquant des blessures graves.

Ne pas suivre ces instructions peut entraîner l´endommagement ou destruction du produit.

Consignes de sécurité

Géneral

Le non respect de ces instructions peut entraîner des accidents impliquant des blessures graves.

Ne pas suivre ces instructions peut entraîner l´endommagement ou destruction du produit.

L´utilisation en toute sécurité du système n´est possible que si l´intégralité des instructions ont été lues et ont été strictement suivies.

Le non respect de se conformer aux instructions marquées du symbole "note" peut entraîner de graves dommages au système ou à un de ses composants.

Il est important pour tout individu qui connecte, installe, ou utilise le système d´avoir les informations nécessaires et l´accès à ce mannuel d´utilisation.

Suivez les instructions pour le montage – risque de blessure si ces instructions ne sont pas suivies.

L´appareil n´est pas destiné à être utilisé par des enfants ou des personnes handicapées sans surveillance.

S´il y a des dommages visibles sur le produit, l´installation ne doit pas être effectuée.

Prendre en compte lors de la construction du matériel, dans lequel l´actionneur est incorporé, qu´il ne doit y avoir aucune possibilité de blessures corporelles, telles que la compression des doigts ou des bras.

Assurez un espace libre autours du materiel pour éviter tout blocage.

This device complies with part 15 of the FCC Rules. Operation is subject to the following two conditions:

(1) This device may not cause harmful interference, and

(2) This device must accept any interference received, including interference that may cause undesired operation

This device complies with Industry Canada licence-exempt RSS standard(s).

Operation is subject to the following two conditions:
(1) this device may not cause interference, and (2) this device must accept any interference, including interference that may cause undesired operation of the device.

Le présent appareil est conforme aux CNR d'Industrie Canada applicables aux appareils radio exempts de licence.

L'exploitation est autorisée aux deux conditions suivantes :
(1) l'appareil ne doit pas produire de brouillage, et (2) l'utilisateur de l'appareil doit accepter tout brouillage radioélectrique subi, même si le brouillage est susceptible d'en compromettre le fonctionnement.

Avant l´installation, ré-installation ou le dépannage:

- Arrêtez TD3
- Retirez la prise du secteur
- Soulagez TD3 des toutes charges qui pourraient être émises lors de l´utilisation

Avant de démarage:

- Assurez-vous que le système a été installalé comme indiqué dans le mannuel d´utilisateur.
- Assurez-vous que la tension du boîtier de contrôle est correcte avant que le système soit connecté sur le secteur.
- Système de connection. Les différentes pièces doivent être connectées entre elles avant que le boîtier de contrôle soit connecté au secteur. Consultez le manuel d´utilisation si nécessaire.

Pendant le fonctionnement:

- Si le boîtier de contrôle émet un bruit ou odeurs inhabituelles, éteignez la tension immédiatement.
- Veuillez à ce que les cables ne soient pas endommagés.
- Débranchez le cable d´alimentation sur l´équipement mobile avant qu´il ne soit déplacé.
- Les produits ne doivent-être utilisés que dans un environement qui correspond à leur IP.

Divers:

Le système d´actionneur présente un niveau sonore inférieur à 55dB (A) dans des applications typiques.
Les mises à jours des manuels et autres informations peuvent-être trouvées sur *www.linak.com/homeline*

Electromagnetic fields (EMF):
This LINAK appliance complies will all standards regarding electromagnetic fields (EMF). If handled properly and according to instructions in this user manual, the appliance is safe to use based on scientific evidence available today.

Seulement pour les marchés au sein de l´UE:

Cet appareil peut-être utilisé par des enfants âgés de 8 ans et plus, ainsi que les personnes dont les capacités physiques, sensorielles ou mentales sont réduites ou ayant un manque d´expérience et de connaissance si elles ont bénéficié d´une surveillance ou d´instructions concernant l´utilisation de l´appareil en toute sécurité et compris les risques encourus.

Les enfants ne doivent pas jouer avec l´appareil. Le nettoyage et l´entretien ne doivent pas être rèalisés par des enfants sans surveillance.

Seulement pour les marchés hors UE.

Les personnes qui n´ont pas l´expérience ou les connaissances nécessaires sur le ou les produit(s) ne doivent pas le ou les utiliser. Par ailleurs, les personnes ayant des capacités physiques, sensorielles ou mentales réduites ne doivent pas utiliser le ou les produit(s), sauf si elles sont sous surveillance ou ont suivi une formation approfondie de l´utilisation de l´appareil par l´individu responsable de la securité de ces personnes.

De plus, les enfants doivent-être sous surveillance afin de s´assurer qu´ils ne jouent pas avec le produit.

Utilisation abusive:

Ne surchargez pas les actionneurs – cela peut engendrer un risque de blessures corporelles et endommager le système.

Ne pas utiliser les actionneurs pour soulever des personnes. Ne pas s´asseoir ou se tenir debout sur une table en fonctionnement – risque de blessures.

Ne pas utiliser le système dans dans des environnements autres que l´utilisation intérieure prévue.

Repairs

In order to avoid the risk of malfunction, all TWINDRIVE® repairs must only be carried out by authorised LINAK workshops or repairers, as special tools must be used and special gaskets must be fitted. TWINDRIVE under warranty must also be returned to authorised LINAK workshops.

DECLARATION OF INCORPORATION OF PARTLY COMPLETED MACHINERY

LINAK A/S
Smedevænget 8
DK - 6430 Nordborg

Name and address of the person authorized to compile the relevant technical documentation:
John Kling, Group Headquarters, Guderup, DK-6430 Nordborg, email jkl@linak.com

Herewith declares that LINAK Actuators and Actuator Systems comply with the following parts of the Machinery Directive 2006/42/EC, ANNEX I, *Essential health and safety requirements relating to the design and construction of machinery*:
1.5.1 Electricity supply: *Directive 2006/95/EC on the harmonization of the laws of Member States relating to electrical equipment designed for use within certain voltage limits.*
1.5.10 Radiation, 1.5.11 External radiation: *Directive 2004/108/EC on the approximation of the laws of the Member States relating to electromagnetic compatibility.*

The relevant technical documentation is compiled in accordance with part B of Annex VII and that this documentation or part hereof will be transmitted by post or electronically to a reasoned request by the national authorities.

This partly completed machinery must not be put into service until the final machinery into which it is to be incorporated has been declared in conformity with the provisions of this Directive, where appropriate.

Date: 2010-01-01

Signature:

John Kling
Certification and Regulatory Affairs

Misc. on the TD3 TWINDRIVE® system

This system is a TWINDRIVE system developed for leisure beds and for indoor use in private homes.

Warranty
There is 36 months' warranty on the TWINDRIVE® products against manufacturing faults calculated from the production date of the individual products (see label). LINAK A/S' warranty is only valid in so far as the equipment has been used and maintained correctly and has not been tampered with. Furthermore, the system must not be exposed to violent treatment. In the event of this, the warranty will be ineffective/invalid. For further details, please see standard terms of sale and delivery for LINAK A/S.

Maintenance
Clean dust and dirt on the outside of the system at appropriate intervals and inspect them for damage and breaks.
Inspect the connections, cables and plugs and check for correct functioning as well as fixing points.

The cleaners and disinfectants must not be highly alkaline or acidic (pH value 6-8).

It is not allowed to use solvents for cleaning up.

Max. load running head and foot end motors at the same time in upward direction is 350 Nm on Head motor, and 200 Nm on Foot end motor.

For customers in the US/Canada:
The mains cable for this product has a polarised plug (one blade is wider than the other). It will only fit in a polarised outlet one way. If it does not fit fully in the outlet, reverse the plug. If it still does not fit, contact a qualified electrician to install a proper outlet. Do not change the plug in any way.

Description of the TWINDRIVE® TD3 system

Each TWINDRIVE® TD3 unit consists of 2 internal motors and a built-in control, which makes it a very compact unit. The mains cable is exchangeable. Only the handset must be paired.

Application of the TWINDRIVE® TD3 system:
Irrespective of the load the **Duty cycle: 10% ~ 3 min./ hour or max. 2 min. at continous use followed by 18 min. not in use.**

Do not turn on the system if it is not mounted in a bed.

Connections

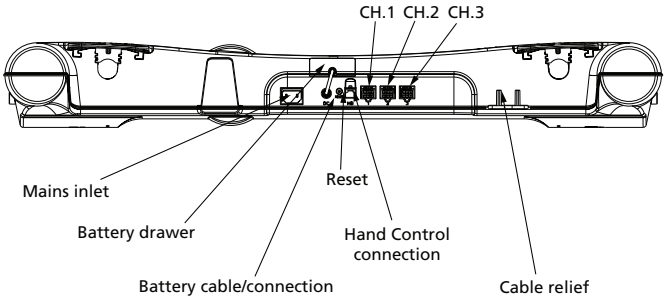

Connection of massage motors (TD32 series):

CH1	CH2
Footrest	Headrest

Connection CH1, CH2 and CH3 (TD33 series)

Massage motors (MD1)
LA27 actuators
Accessories (LED, DC Connector, USB Connector, Bluetooth2Lin)

Mains inlet

The mains cable can either be a standard computer power cable or a mains cable with mains cut-off. Both versions are exchangeable. The mains cut-off mains cable ensures that the TD3 system has a very low standby power consumption of only 0.1 W

Mains cables

WP0500

Cable relief

It is important to use the cable relief for the mains cable on the TD3. By using the cable relief you avoid that the mains cable plug is pulled out of the TD3 and a malfunction occurs.

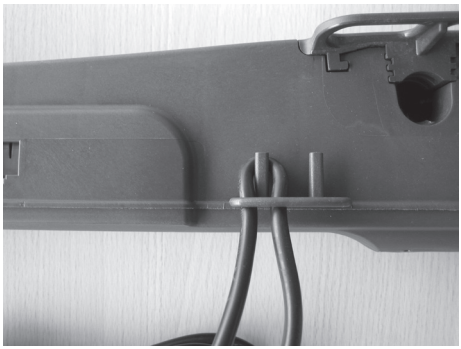

Mounting guidelines for the TWINDRIVE®

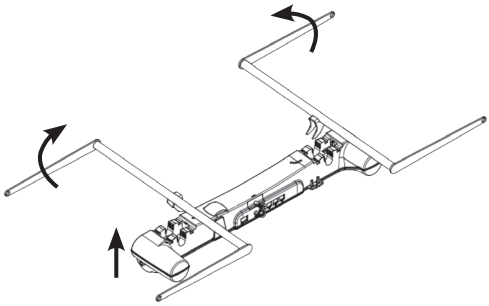

Place the TD3 below the twist brackets/"arms" of the bed

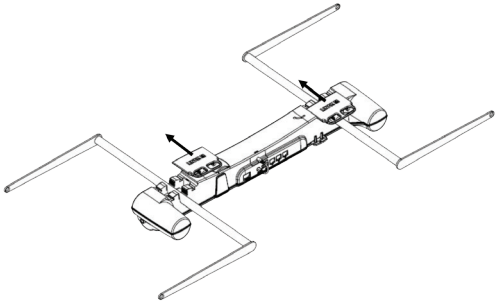

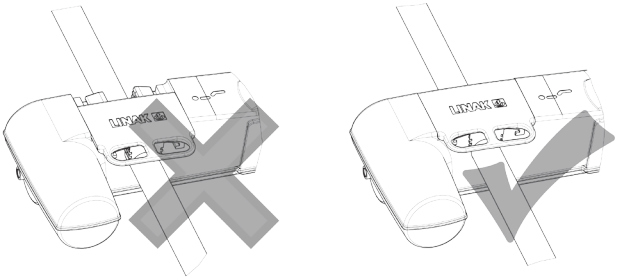

Mount the TD3 and slide the closing devices over the gaps and make sure that the closing devices are in place before the TD3 is used.

Functional description

Hand Control HB

Up – down head motor
Up – down foot motor
Simultaneous up/down

Hand Control HB20RF:

Up – down head motor
Up – down foot motor
up to 3 extra channels

common operation up/down (option)

Memory positions
(3 positions)

Store Button

Light Button

How to store

- Drive to the desired position
- Push "S"
- Immediately afterwards the desired memory position must be pushed (1, 2 or 3)
- The position is now stored

Drive to stored memory position

Push (1, 2 or 3) keep the button down until the position has been reached.

Hand Control HC20RF:

Up – down head motor

Up – down foot motor
up to 3 extra channels

common operation up/down (option)

Memory positions (3 positions)

Store Button

Light Button

Torch - Light Button

Start-up - How to install the RF handset:

The TD3 can accept commands from up to 2 RF handsets.

From the factory the TD3 cannot recognise any RF handsets at all and must be matched to the RF handset(s) by the end-user/bed manufacturer before these can control the TD3 operation.

Conditions which must be fulfilled prior to activating the learning mode:

- Both the back and the leg actuators must be in the fully down position; *if one or both actuators are NOT in the fully down position; the matching procedure cannot be continued as now an ordinary reset down function is performed instead.* Thereafter, the reset key must be released and reactivated.

Activating the learning mode:

- Activate the reset key on the TD3 by using a pen or similar to keep the button pressed.
- Keeping the reset key activated; the RF handset(s) must be activated one at a time by pressing a random key on the RF handset. The RF handset IDs are stored in the TD3 memory and at the same time, previous RF handset IDs are erased.

HB12RF

HB22RF

HC20RF

- After having activated the RF handset keys; the reset key must be released.
- If no RF handset keys are activated during the matching procedure; no changes are made in the ID memory of the TD3.

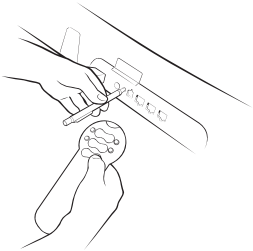

Connection of LA27 actuators:
The TD3 will as default detect and run the LA27 using plug and play rules as illustrated in the table below. The idea is that the Headrest is the first actuator, the Footrest is the second actuator and then the Extra function. The Headrest is always the one nearest to the Backend and the Footrest is always the one nearest to the Leg-end.

CH1	CH2	CH3
Headrest	-	-
-	Headrest	-
-	-	Headrest
Footrest	Headrest	-
Footrest	-	Headrest
-	Footrest	Headrest
Footrest	Extra function	Headrest

If 2 or 3 x LA27 actuators are connected to the TD3 and one of the LA27 actuators gets disconnected, the function of the HB will change according to above scheme.

Start-up/initialisation of LA27 actuator:
After connection of the LA27, the system has to be initialised. Push down the button for the LA27, which has to be initialised. When the sound from the LA27 stops, the system is initialised. If more than 1 actuator is connected, the same has to be done with the other channels.

Child lock function - only for HB20RF

Enable the child lock function:
To enable the child lock function the following procedure must be performed:

1. Dismount the battery lid
2. Remove 1 battery and wait for 15 seconds
3. Press both buttons on row 2 and mount the battery at the same time
4. The child lock function is now enabled
5. Mount the battery lid

See pictures below:

N.B: The child lock function only locks the actuator functions. Therefore, it is disabled when the handset is in massage command mode.

Unlock the child lock function:
Press up and down keys of the 2nd row (footrest up/down on a HB2X) at the same time for one second. When the LED turns on, the handset is unlocked.

NB: The handset is still locked if the keys are not released again before the LED turns off.

Automatic lock
The handset is automatically locked 10 seconds after last key press.

Signal that the handset is locked
If the handset is locked and the user tries to operate it, it will give a short flash with the LED to indicate *"key is pressed, but handset is locked"*

Disable the child lock function
If you wish to disable the child lock function, just dismount a battery and wait 15 seconds before you mount it again. The child lock function is now disabled.

Frequency tuning (FT)

HB12RF

HB22RF

FT (Frequency Tuning):
FT is designed to minimise problems with interfering RF frequencies by moving the frequency of the receiver to a more optimal placement relative to the interfering frequency. FT cannot alleviate problems if the interfering RF transmitter is sending on the same frequency as the handsets.

The FT has three frequencies it tries out: The centre frequency found during the PCB-test, a frequency a bit lower and one a bit higher. The two last frequencies are found by empiric testing of a number of units trying to find the optimum frequency that gives least interference but still adequate reception. It takes approx. 7 seconds to complete the FT.

How to activate the FT:
The FT can be activated at any position of the TWINDRIVE® TD.

1. Check Software and Hardware version according to above specification
2. Check that FT is enabled in the configurator, always enabled with standard configuration of TD3.
3. Be sure that the TD is connected to the mains
4. The HB has to be paired to the TD
5. Test and check that the TD can run when the HB is close to the TD (0-30 cm). Only to be sure that the TD and the HB is paired.
6. The optimum frequency is achieved when the handset can just barely activate the TD.
7. Activate FT by pressing two buttons on the HB at the same time: **backrest up and backrest down**. These buttons must be pressed during the entire operation for the FT to be successful. Keep the keys pressed, the frequency is now stored in the unit, otherwise the FT returns to the last stored frequency. Keys have to be pressed for at **least 7 seconds.** It does not matter that the keys are pressed for a longer time.

Return to factory setting
Push shortly on the reset button. Do not push on the HB button.

Please observe:

- Should the FT see another key-press from the same handset (e.g. the user has released one of the two buttons) the FT immediately terminates and the system returns to normal operation on the old selected frequency.
- Should the FT lose connection to the HB it will still continue scanning as the reason could be because the currently scanned frequency is simply too bad for reception.
- The FT can be restarted again at any time by the user and can be disabled completely by configuration of the TD3.
- If the FT is disabled and a manual frequency has been entered, the system cannot be returned to centre-frequency by pressing the reset button.
- If the FT somehow has selected an even worse frequency than centre-frequency (e.g. because the interfering frequency has moved) and the FT can no longer be activated (because the unit cannot see any RF), the FT can be returned to centre-frequency by following the procedure for pairing handsets. It is not necessary to actually re-pair the handsets, simply press the reset button shortly while ready for re-pairing is enough.

Disturbance of RF signals:

Please be aware that other equipments (as e.g. doorbells), which use the 433 MHz can disturb the RF signal.

Under some circumstances it is not possible to run 2 or more TD3s at the same time.

Please observe if you place 2 beds/2 x TD3 at a distance below 0.7 m the RF signals may interfere each other and the TD3s can run irregularly.

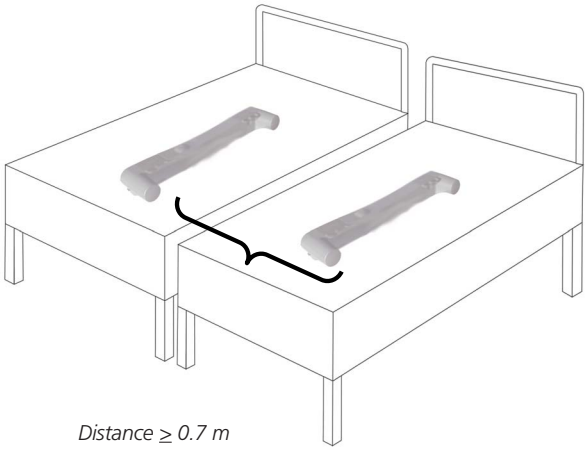

Massage systems controlled by HB22RF2000

Usage:

Enter/exit massage command mode

Pressing this button will toggle the handset from controlling massage functions and bed adjustment. The mode in which the handset is, is indicated by the LED at the top of the handset :

LED Flashing – handset is controlling massage functions
LED Off – handset is controlling bed functions

Pressing this button has no influence on the TWINDRIVE unit except for waking it up so that the response time to massage commands is shorter.

If no button is pressed for 10 minutes, the control will automatically return to bed function (LED off).

Controlling the backrest massage motor

Keep the button pressed to adjust the intensity up or down (Left button up, right button down). Keeping the down button pressed will turn the motor off when going below minimal intensity. The intensity can be controlled when running in a massage program, but the massage program will be temporarily halted and both motors are run with currently chosen intensity until the up/down button is released.

A short button press turns the backrest massage motor on or off (Left button on, right button off).

If the massage motor is turned on, which had previously been turned off by decreasing the intensity, it will start the massage motor at the lowest configured intensity (set by the TD3 configuration).

Controlling the leg rest massage motor

Keep button pressed to adjust the intensity up or down (Left button up, right button down). Keeping the down button pressed will turn the motor off when going below minimal intensity. The intensity can be controlled when running in a massage program, but the massage program will be temporarily halted and both motors are run with currently chosen intensity until the up/down button is released.

A short button press turns the leg rest massage motor on or off (Left button on, right button off).

If the massage motor is turned on, which had previously been turned off by decreasing the intensity, it will start the massage motor at the lowest configured intensity (set by the TD3 configuration).

Controlling the massage program

A short press on left button turns on a massage program (wave, pulse etc.) or changes to next program if a program is already activated. Starting a massage program always turns on both motors at current intensity.

A short press on the right button turns off both massage motors no matter if they are running in a massage program, or separately.

Press and hold the left button to increase the speed of the pulses/waves or press and hold the right button to decrease the speed of the pulse/waves.

Store and recall massage settings

When in massage mode, 2 massage settings can be stored.

To store the current active massage settings, press the “S” button followed by either the “1” or “2” button.
To recall a previous stored setting, press the “1” or “2” button.

HB22RF2000 in general:

- Massage will turn off automatically 10 minutes after the last adjustment of the settings. Default at the TD1 and the TD3. The TD3 can be configured.
- Adjusting the bed will turn off the massage, but massage will automatically start up again afterwards.
- When turning on a single massage motor it will start up with the same intensity as it was last time it was running as a single motor.
- When turning on a massage program it will start up with the same settings (program, motor change speed, intensity, wave/pulse, frequency) as it was last time.
- When in massage mode, turning on a massage function can also be done by keeping the up button pressed. Then it will turn on, and after a short delay adjust the intensity up.
- In case of any error: current limitation, high temperature or short circuit, the massage system will stop both motors, even if only one motor is affected.

Massage systems controlled by HB22RF2001

On/off (start/stop of the massage)

Mode (change between the different massage programs)

Controlling the backrest massage motor:

Keep the left button pressed to adjust the intensity down and the right button pressed to adjust the intensity up. A short press on the right button turns on the massage motor at current intensity. The massage will run in continues mode while being adjusted.
NOTE: The up/down intensity adjustment is reversed compared to the HB22RF2000

Controlling the leg rest massage motor

Keep the left button pressed to adjust the intensity down and the right button pressed to adjust the intensity up. A short press on the right button turns on the massage motor at current intensity. The massage will run in continues mode while being adjusted.
NOTE: The up/down intensity adjustment is reversed compared to the HB22RF2000

Store and recall settings

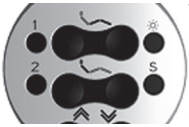

To store the current active massage settings, press the “S” button followed by either the “1” or “2” button. To recall a previous stored setting, press the “1” or “2” button.
NOTE: By default the memory buttons only store the position of the TD3 back/ leg adjustment motors. Position and massage can be stored by activating this option in the TD3 configurator.

Accessories for the TD3

Toggles on/off the light, DC or USB unit. Which function it controls is determined by the TD3 configured via the configurator.

HB22RF2001 in general:

- For light/DC/USB and massage to function on the TD33, the TD3 must be configured. By default the TD33 will not operate massage.
- Massage will turn off automatically 10 minutes after the last adjustment of the settings. This timing can be changed in the TD3 configurator.
- Adjusting the bed or turning on/off the accessories is possible without any interruption.
- When pushing on the on/off button the massage motors will run in Continuous Mode. When pushing the Mode button the massage mode will change.
- Turning on a single massage motor can also be done by pushing the right button for massage.

Massage programs

As default the system has 5 massage modes, they are:

Hard-wave The massage motors take turns on/off (one on = one off)

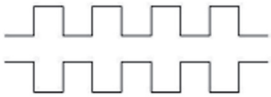

Soft-wave The massage motors work similar to a wave: when one motor decreases the speed the other motor will increase the speed.
Continues in turns like this.

Hard-pulse Both massage motors run at the same time. They run from min. to max. speed.

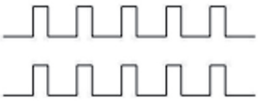

Soft-pulse Both massage motors run at the same time. They run from min. to max. speed.
From max. speed they drop to min. speed.

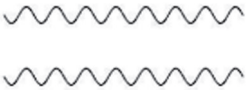

Continuous Both massage motors work at the same time.

Mounting instructions for the massage motor:

Mounting on plate:

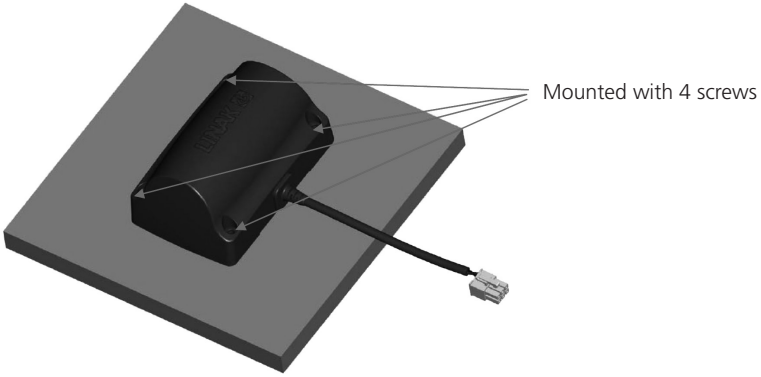

The massage unit is mounted with 4 x 4 mm round head wood screws with flat underside. The head must be 8 mm in diameter and in length 19 mm + the thickness of the plate on which the massage motor is mounted. Torque max. 2 Nm + resistance in the plate.

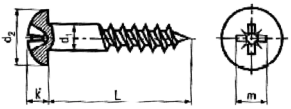

Mounting instructions for the massage motor by using brackets:

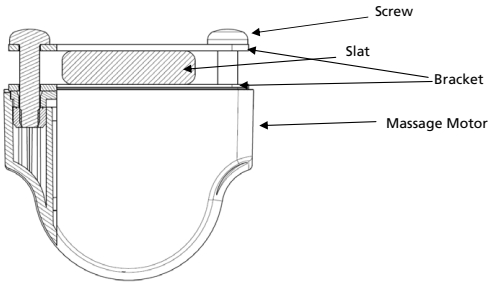

The massage unit is mounted with 4 x M6 round head machine screws with flat underside. 15 to 20 mm long + the thickness of the bracket. Torque max. 2-3 Nm. 2 Brackets must be used – one on each side of the slat.

Mounted on one slat:

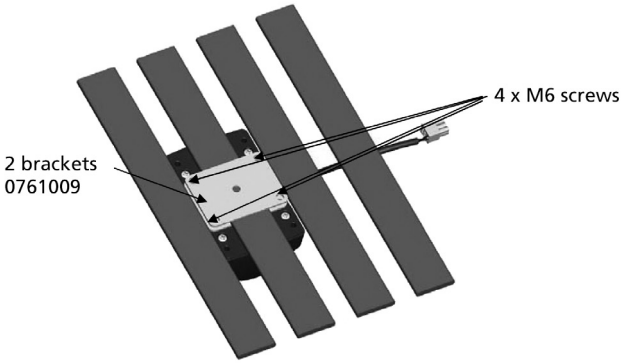

The massage motor is mounted onto the slat by using 2 brackets 0761009 and 4 x M6 screws of a good quality. Inside the motor 4 self-locking nuts avoid the mounting screws to get loose.

Mounted on three slats:

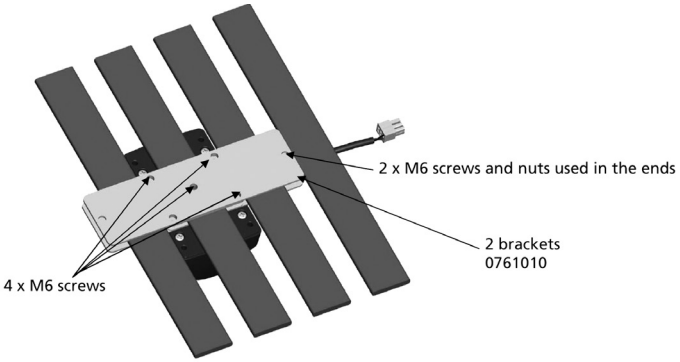

Accessories:

The TD3 can handle different kinds of accessories. The main types are:

1. LED Lightbox: A light unit
2. DC Connector: Connection possibilities of units with DC plugs
3. USB Connector: Connection possibilities with units with USB plugs
4. Bluetooth2LIN with this box connected you can use your iPad, iPhone or iPadtouch as a handset

Cable for connection to the TD3 is a separate unit: 0617101, 205 mm long

1. LED Lightbox
   Just connect the LED Lightbox to the TD3 system via the motor cable. The light can be turned on and off via the handset.

2. DC Connector
   Connect the DC Connector to the TD3 system via the motor cable. Before use the system must be configured via the TD3 configurator to be able to handle the mounted DC unit. The TD3 configuratior is a PC software program. Connect your DC unit with the DC Connector e.g. a LED light rail and the light can be turned on and off via the handset. As standard the TD3 can handle DC units using 12V. Units using other levels must be configured.

   See system example

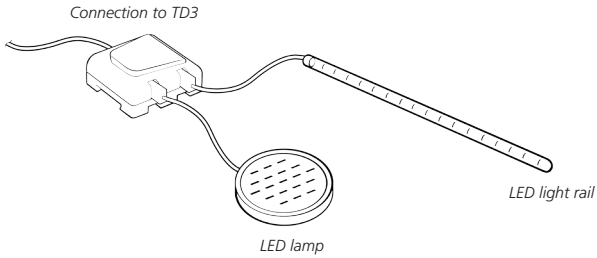

3. USB Connector
   Connect the USB Connector to the TD3 system via the motor cable. Before use the system must be configured via the TD3 configurator to be able to handle the mounted USB unit. The TD3 configurator is a PC software program.

   Via this unit you can connect a range of different accessories and gadgets with a USB plug, just as long as the device works in accordance with the general USB charger standard (max. 5V and supply max. 0.5A).

   Example of a USB unit could be an energy saving busbar to which a standard lamp can be connected. The lamp can then be turned on and off via the handset, see example below.

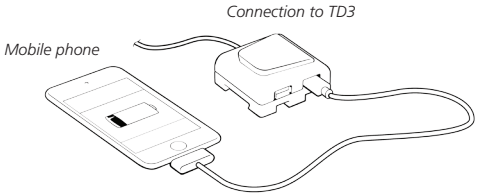

4. See the separate instruction for connection and use
   (*http://catalog.linak.com/Linak/ENGLISH/USERMANUAL/HOMELINEBluetoothBedUserManualEng/*)

Changing of batteries

1. Remove the battery cover (see *Figure 1*).
2. Use a blunt instrument to remove the battery.
3. Place 3 new batteries of the types R03 or LR03 (AAA) in the transmitter. Direction of how to place the batteries in the transmitter is shown in *Figure 2*

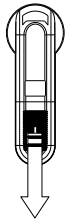

Figure 1

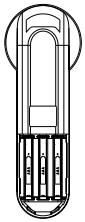

Figure 2

Emergency lowering function: (optional)

Emergency lowering is meant for lowering the bed if a power failure occurs and the bed needs to be driven down into horizontal position.

The internal motors in the TD3 and all external motors connected can run in a random order depending on which button is activated on the handset. When the synchronous drive/reset button on the handset is activated, the system will run in a sequence running the internal motors first and then the external motors. The default sequence of the emergency lowering is backrest => leg rest => headrest. If more external motors are connected, they will not run by activating the synchronous drive/reset button, but only if the belonging button on the handset is activated. If the system does not work as described above, the setup is not standard.

Please observe that all motors will be driven singularly.

Emergency lowering after 2 hours (disconnection of mains):
If a power failure or a disconnection of the mains continues for more than 2 hours, the TD3 will go into a hibernation mode. When the TD3 is in hibernation mode, the bed can only be activated by activating the reset button (see page 15) on the TD3. Keep the button pressed or use the handset to drive to horizontal position.

Mounting of the accessories:

All 3 types can either be mounted on the bed using screws OR simply slide the unit(s) onto the groove on the TD3. The mounting screws must be fastened with a max. torque of 1 Nm.

For mounting on the bedframe: use wood screws (M4) with a maximum head diameter of 8 mm, and a suitable length.

If several units are used in a system, they can be stacked/mounted on top of each other, taking up a minimum of space.

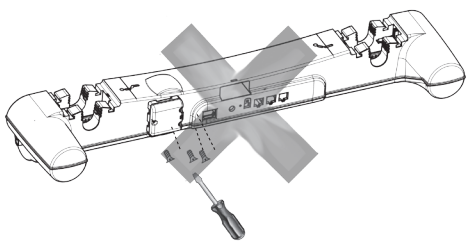

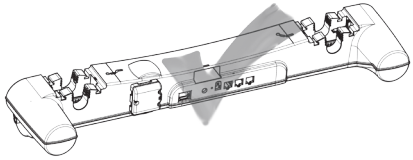

Connection of emergency lowering:

Please observe that if you order the TD3 with 2 x 9V batteries mounted, the batteries will not be connected. The customer needs to connect the cable from the battery drawer to the TD3 when installing the bed and connecting the mains.

If the batteries are connected and the bed is not connected to the mains, the batteries will discharge in approx. 2 months and it will not be possible to perform an emergency lowering.

Lifetime of batteries:

The batteries must be changed after an emergency lowering has been performed. Batteries that have not been used must be changed after approx. 3 years.

Battery type:

Alkaline 9 V batteries 9F22 or 6LR61.

The correct way to use the functionality:

If the key is released during the lowering, always wait for 60 seconds before pressing the key again.

Removal/fitting of the 2 x 9 V batteries:

To change the 2 x 9 V batteries for emergency lowering the first step is to disconnect the cable and then pull out the drawer of the TD3. On the bottom of the drawer, there are 2 holes, which are to be pushed with a finger or a blunt instrument. The batteries will be released from the drawer when pushing. The new batteries can be placed in the drawer. Afterwards, place the drawer in the TD3 and connect the cable again.

Only use alkaline batteries, and make sure to polarise the batteries correct according to the symbols in the drawer.

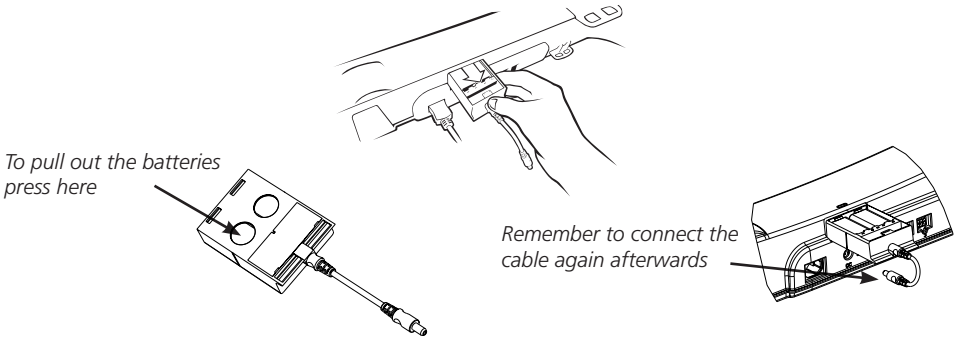

Welding the twist bracket on the frame

1) For the TD3 it is important that it is not welded on the outside of the twist bracket because there is not room for a welding seam in the motor housing. Instead weld the bracket on the whole length of its ends.

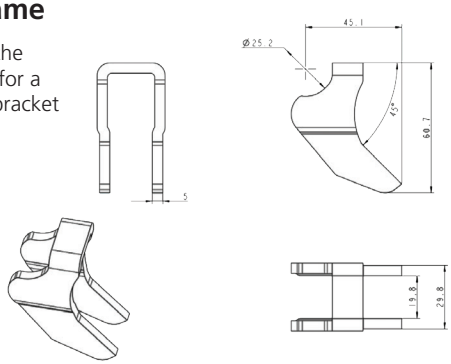

2) To maintain the correct angle of rotation of the headrest and the footrest it is important that the twist bracket is welded according to the below instructions. Non-compliance with the instructions could lead to a smaller angle of rotation or in a worst case damage to the TD3.

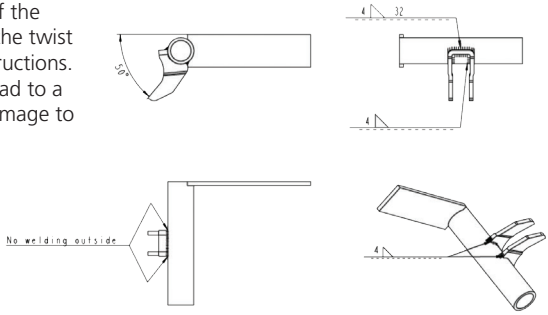

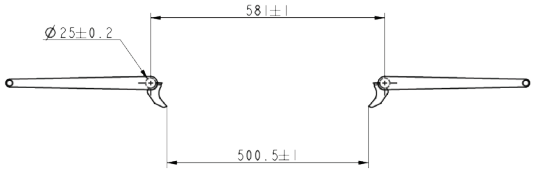

Tolerance of the parallels:

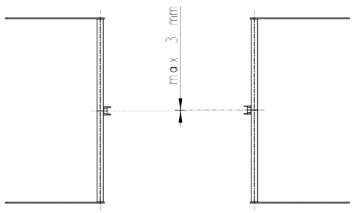

Label for TD3 TWINDRIVE® System

Label for LA27

The shown TD3 label is an example for one model part number.
The power ratings for other models are:
For TD3x10xxxxxxx
U in: 230V, 50 Hz
P in: 250W

For TD3x11xxxxxxx
U in: 120V, 60 Hz
P in: 240W

Label for Massage Motor

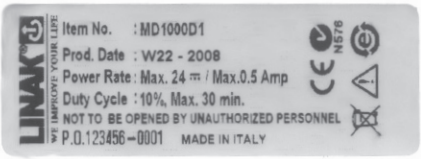

Label for HB12RF

Label for HB22RF

Label for HC20RF

Label for LED Lightbox

Label for DC Connector

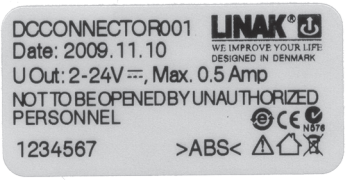

Label for USB Connector

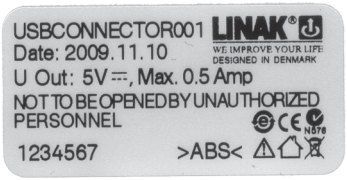

Label for Bluetooth2LIN001

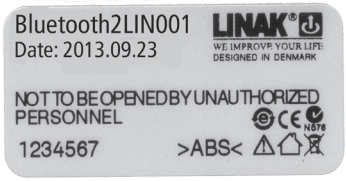

Disposal of LINAK products

As LINAK customers often ask us how our products can be disposed of or scrapped we have prepared this guidance that enables a classification to different waste fractions for recycling or combustion.

Guidance

We recommend to disassemble our product into as many fractions as possible at the disposal and try to make it recycable. As examples of main groups within waste fractions we can mention:

Metal, plastic, cable shoe, combustible waste and collection for recovery.

Some of these main groups can be subdivided, e.g. metal can be divided into iron, stainless steel and aluminium and alloy steel. Plastic can e.g. be divided into ABS, PA, PE and PP.

As an example of sorting, please find below a list stating in which recycling groups the different components of LINAK products ought to be placed:

Product	Components	Recycling group
Actuator:	Spindle and motor Plastic housing Cable	Scrap Plastic recycling or combustion Cable scrap or combustion
Massage motor:	Plastic housing Cable	Plastic recycling or combustion Cable scrap or combustion
TWINDRIVE:	PCB Plastic housing Cable Transformer Scrap Batteries Spindle and motor	Electronics scrap Plastic recycling or combustion Cable scrap Recovery Scrap
Handset/Control: LED/DC/USB	Plasic housing Cable PCB Batteries	Plastic recycling or combustion Cable scrap Electronics scrap Recovery

By now almost all our casted plastic parts are supplied with an interior code for plastic type and fibre contents, if any.

Main groups of disposal

Product main groups	Scrap	Cable scrap	Electronics scrap	Plastic recycling or combustin	Comments
LA27	X	X	X	X	The metals can be sorted for steel or aluminum
TD3	X	X	X		
HB10RF		X	X	X	
HB20RF		X	X	X	
HC20RF		X	X	X	
MD1	X	X		X	
LED Lightbox		X	X	X	
DC Connector		X	X	X	
USB Connector		X	X	X	
Bluetooth2LIN		X	X	X	can be chosen as accessories

Disposal of batteries

Details regarding safe disposal of used and leaking batteries:
Batteries should be disposed in accordance with appropriate federal, state and local regulations. LINAK recommends that used or leaking batteries are disposed through the local recycling system. Please do not throw used or leaking batteries in normal household waste or in nature. This will cause damage to the enviroment.

How to deal with leaking batteries

Leaking batteries should be disposed as described above.
If leaking batteries are discovered in the product the batteries must be removed at once to minimise damage to the product. If leaking batteries are left in the product, it may become defective.

It is recommended to use plastic gloves when handling leaking batteries. The contents of leaking batteries can cause chemical burns and respiratory irritation.

If exposed to the contents of a leaking battery, please wash with soap and water. If irritation persists, please seek medical attention. In case of eye contact, please flush eyes thoroughly with water for 15 minutes and seek medical attention.

DRAWING APPENDIX

TWINDRIVE® TD3 System

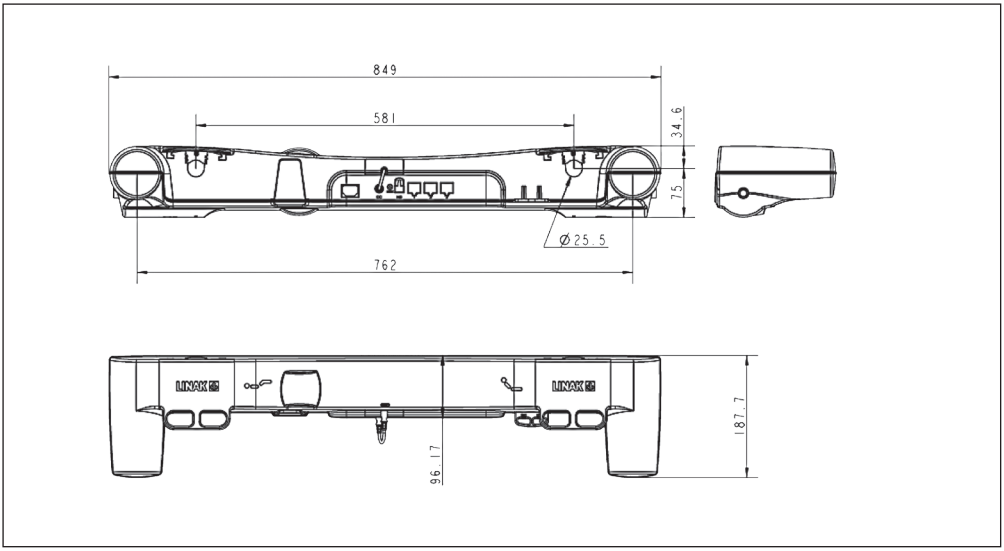

LA27

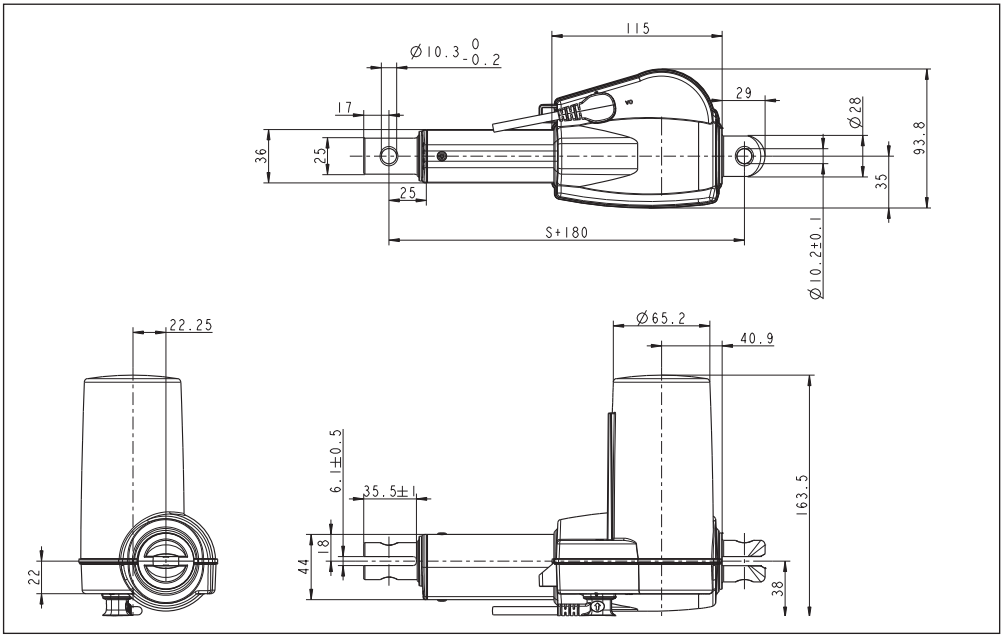

HB12RF Hand Control

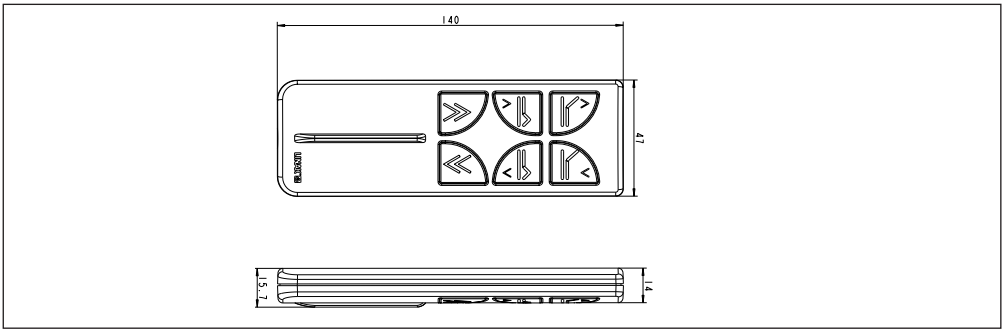

HB20RF Hand Control

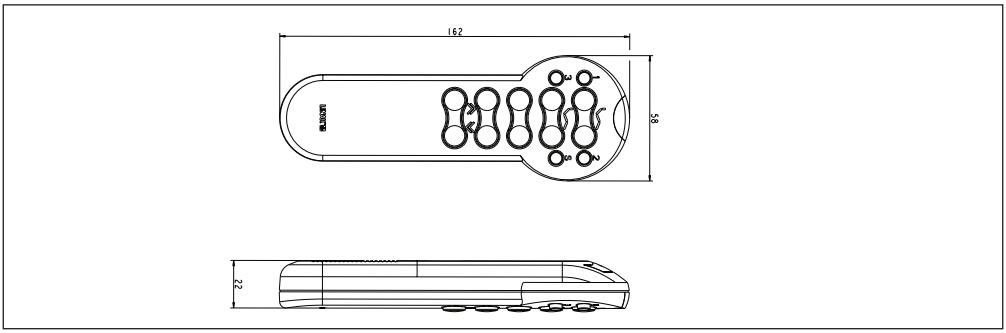

HC20RF Hand Control

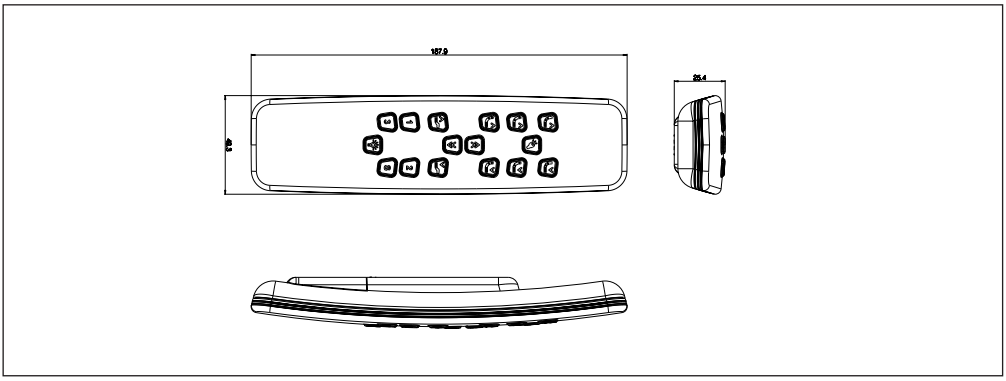

LED Lightbox

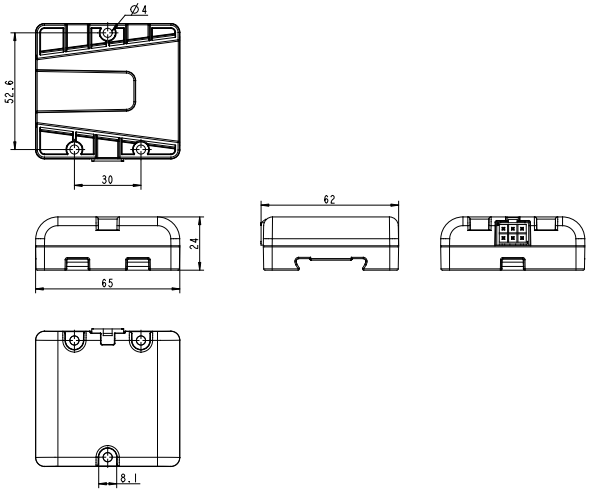

DC Connector

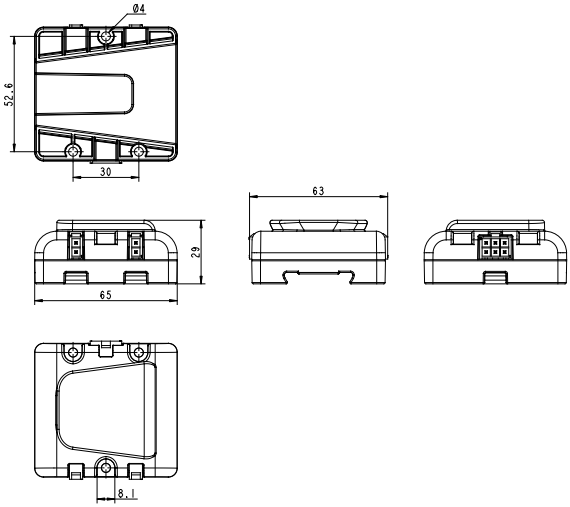

USB Connector

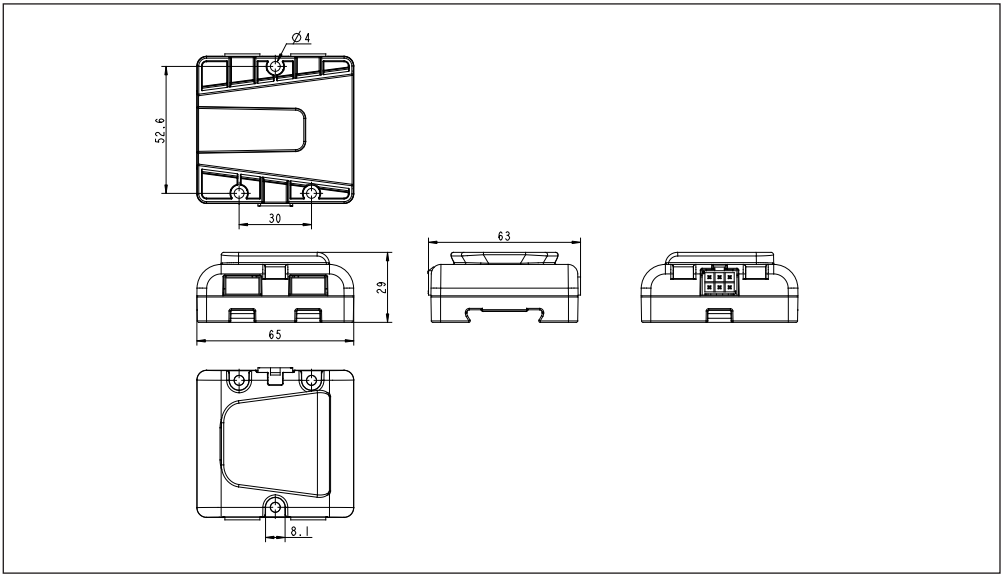

Bluetooth2LIN

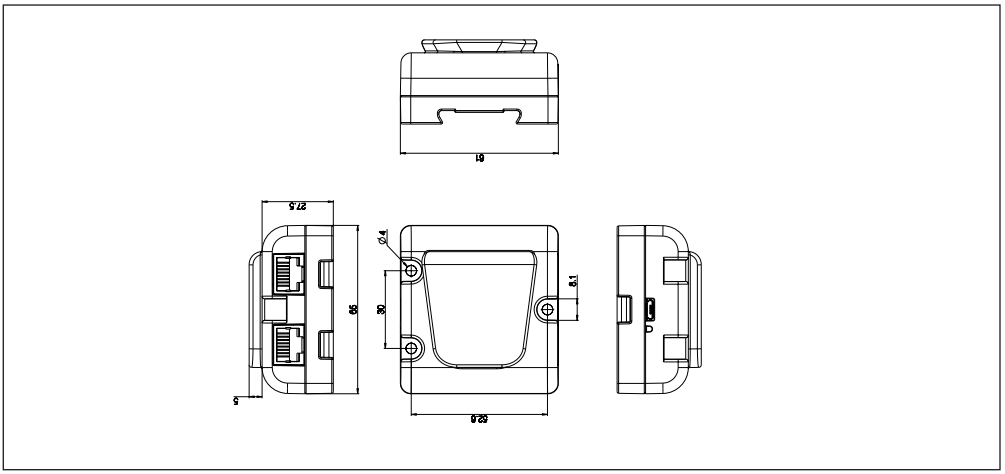

Massage motor MD1

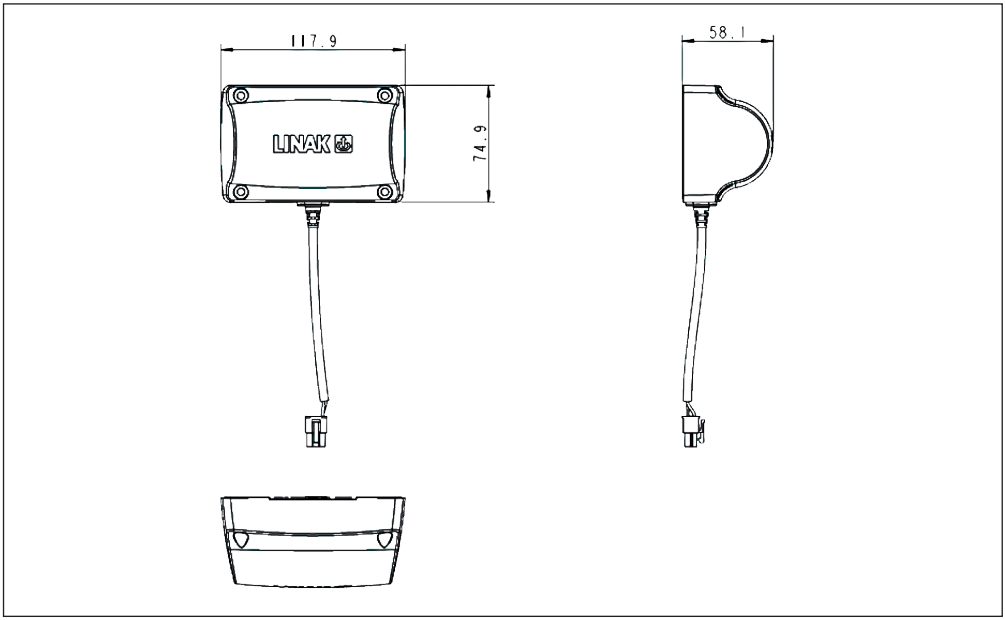

DECLARATION OF CONFORMITY

LINAK A/S
Smedevænget 8
DK - 6430 Nordborg
DENMARK

herewith declares that LINAK dual actuator system TWINDRIVE®:

TD3XXXXXXXXXXX

And

Linear Actuator:	270284-00	and/or
	270319-00	and/or
	270351-00	

And

Exchangeable mains cut-off: WP0500

And

Massage Motor: MD1xxxxx

And

Accessories:	T-splitter	and/or
	DCCONNECTOR001	and/or
	USBCONNECTOR001	and/or
	LEDLIGHTBOX001	

complies with the EMC Directive 2004/108/EC according to following standards:
EN 61000-6-1:2007, EN 61000-6-3:2007.

and complies with Low Voltage Directive 2006/95/EC according to the standard:
EN 60335-1:2002+A1:2004+A11:2004+A12:2006+A2:2006+A13:2008

Controls:	RF-transmitter, HB1XRFXXXX	and/or
	RF-transmitter, HB2XRFXXXX	and/or
	RF-receiver, TD3XXXXXXXXXXX	

complies with the Radio equipment and Telecommunications terminal equipment Directive 1999/5/EC:
EN 300220-2:2006, EN 61000-6-1:2007, EN 61000-6-3:2007,
EN 60335-1:2002+A1:2004+A11:2004+A12:2006+A2:2006+A13:2008, EN 62311:2008
.

Nordborg, 2011-03-15

LINAK A/S
John Kling, B.Sc.E.E.
Certification and Regulatory Affairs
Authorized to compile the relevant technical documentation

DECLARATION OF CONFORMITY

LINAK A/S
Smedevænget 8
DK - 6430 Nordborg

hereby declares that LINAK Bluetooth receiver:
BLUETOOTH2LIN001

complies with the Radio equipment and Telecommunications terminal equipment Directive 1999/5/EC:
EN 300328 V1.7.7:2006,
EN 301489-1 V1.9.2:2011, EN 55014-1:2006+A1+A2, EN 55014-2:1997+A1+A2, EN 61000-3-2:2006+A1+A2, EN61000-3-3:2008
EN 62311:2008

complies with RoHS2 Directive 2011/65/EU according to following standards:
EN 50581:2012

The system does also comply with the standards:
EN 61000-6-1:2007 Electromagnetic compatibility (EMC) - Part 6-1: Generic standards - Immunity for residential, commercial and light-industrial environments
EN 61000-6-3:2007 Electromagnetic compatibility (EMC) - Part 6-3: Generic standards - Emission standard for residential, commercial and light-industrial environments

Nordborg, 2013-09-26

LINAK A/S
John Kling, B.Sc.E.E.
Certification and Regulatory Affairs
Authorized to compile the relevant technical documentation

LINAK APPLICATION POLICY

The purpose of the application policy is to define areas of responsibilities in relation to applying a LINAK product defined as hardware, software, technical advice, etc. related to an existing or a new customer application.

LINAK products as defined above are applicable for a wide range of applications within the Medical, Furniture, Desk, and Industry areas. Yet, LINAK cannot know all the conditions under which LINAK products will be installed, used, and operated, as each individual application is unique.

The suitability and functionality of the LINAK product and its performance under varying conditions (application, vibration, load, humidity, temperature, frequency, etc.) can only be verified by testing, and shall ultimately be the responsibility of the LINAK customer using any LINAK product.

LINAK shall be responsible solely that the LINAK products comply with the specifications set out by LINAK and it shall be the responsibility of the LINAK customer to ensure that the specific LINAK product can be used for the application in question.

FACTORIES

CHINA
LINAK (Shenzhen) Actuator Systems, Ltd.
Phone: +86 755 8610 6656
Fax: +86 755 8610 6990
E-mail: sales@linak.cn
www.linak.cn

DENMARK
LINAK A/S - Group Headquarters, Guderup
Phone: +45 73 15 15 15
Fax: +45 74 45 80 48
Fax: +45 73 15 16 13 (Sales)
E-mail: info@linak.com
www.linak.com

SLOVAKIA
LINAK Slovakia s.r.o.
Phone: +421 51 75 63 414
Fax: +421 51 75 63 410
E-mail: jp@linak.sk
www.linak.com

USA
LINAK U.S. Inc.
North and South American Headquarters
Phone: +1 502 253 5595
Fax: +1 502 253 5596
E-mail: info@linak-us.com
www.linak-us.com

SUBSIDIARIES

AUSTRALIA
LINAK Australia Pty. Ltd
Phone: +61 3 8796 9777
Fax: +61 3 8796 9778
E-mail: sales@linak.com.au
www.linak.com.au

AUSTRIA
LINAK Repräsentanz Österreich (Wien)
Phone: +43 (1) 890 7446
Fax: +43 (1) 890 744615
E-mail: info@linak.de
www.linak.at

BELGIUM & LUXEMBOURG
LINAK Actuator-Systems NV/SA
Phone: +32 (0)9 230 01 09
Fax: +32 (0)9 230 88 80
E-mail: info@linak.be
www.linak.be

BRAZIL
LINAK Do Brasil Comércio De Atuadores Ltda.
Phone: +55 (11) 2832 – 7070
Fax: +55 (11) 2832 – 7060
E-mail: info@linak.com.br
www.linak.com.br

CANADA
LINAK Canada Inc.
Phone: +1 502 253 5595
Fax: +1 416-255-7720
E-mail: info@linak.ca
www.linak-us.com

CZECH REPUBLIC
LINAK C&S S.R.O.
Phone: +420581741814
Fax: +420581702452
E-mail: ponizil@linak.cz
www.linak.cz

DENMARK
LINAK Danmark A/S
Phone: +45 86 80 36 11
Fax: +45 86 82 90 51
E-mail: linak@linak-silkeborg.dk
www.linak.dk

FINLAND
LINAK OY
Phone: +358 10 841 8700
Fax: +358 10 841 8729
E-mail: linak@linak.fi
www.linak.fi

FRANCE
LINAK France E.U.R.L
Phone: +33 (0) 2 41 36 34 34
Fax: +33 (0) 2 41 36 35 00
E-mail: linak@linak.fr
www.linak.fr

GERMANY
LINAK GmbH
Phone: +49 6043 9655 0
Fax: +49 6043 9655 60
E-mail: info@linak.de
www.linak.de

INDIA
LINAK A/S India Liaison Office
Phone: +91 120 4393335
Fax: +91 120 4273708
E-mail: info@linak.in
www.linak.in

IRELAND
LINAK UK Limited - Ireland
Phone: +44 (0)121 544 2211
Fax: +44 (0)121 544 2552
+44 (0)796 855 1606 (UK Mobile)
+35 387 634 6554 (Republic Of Ireland Mobile)
E-mail: sales@linak.co.uk
www.linak.co.uk

ITALY
LINAK Italia S.r.l.
Phone: +39 02 48 46 33 66
Fax: +39 02 48 46 82 52
E-mail: info@linak.it
www.linak.it

JAPAN
LINAK K.K.
Phone: 81-45-533-0802
Fax: 81-45-533-0803
E-mail: linak@linak.jp
www.linak.jp

MALAYSIA
LINAK Actuators Sdn. Bhd.
Phone: +60 4 210 6500
Fax: +60 4 226 8901
E-mail: info@linak-asia.com
www.linak.my

NETHERLANDS
LINAK Actuator-Systems B.V.
Phone: +31 76 5 42 44 40
Fax: +31 76 5 42 61 10
E-mail: info@linak.nl
www.linak.nl

NEW ZEALAND
LINAK New Zealand Ltd.
Phone: +64 9580 2071
Fax: +64 9580 2072
E-mail: nzsales@linak.com.au
www.linak.co.nz

NORWAY
LINAK Norge AS
Phone: +47 32 82 90 90
Fax: +47 32 82 90 98
E-mail: info@linak.no
www.linak.no

POLAND
LINAK Polska
Phone: +48 (22) 500 28 74
Fax: +48 (22) 500 28 75
E-mail: dkreh@linak.dk
www.linak.pl

REPUBLIC OF KOREA
LINAK Korea Ltd.
Phone: +82-(0)2-6231-1515
Fax: +82-(0)2-6231-1516
E-mail: scully@linak.kr
www.linak.kr

RUSSIAN FEDERATION
000 LINAK
Phone: +7 495 280 14 26
Fax: +7 495 687 14 26
E-mail: info@linak.ru
www.linak.ru

SPAIN
LINAK Actuadores, S.L.u
Phone: +34 93 588 27 77
Fax: +34 93 588 27 85
E-mail: linakact@linak.es
www.linak.es

SWEDEN
LINAK Scandinavia AB
Phone: +46 8 732 20 00
Fax: +46 8 732 20 50
E-mail: info@linak.se
www.linak.se

SWITZERLAND
LINAK AG
Phone: +41 43 388 31 88
Fax: +41 43 388 31 87
E-mail: info@linak.ch
www.linak.ch

TAIWAN
LINAK A/S Taiwan Representative Office
Phone: +886 2 27290068
Fax: +886 2 27290096
Mobile: +886 989292100
E-mail: michael.chen@linak.com.tw
www.linak.com.tw

TURKEY
LINAK İth. İhr. San. ve Tic. A.Ş.
Phone: + 90 312 4726338
Fax: + 90 312 4726635
E-mail: info@linak.com.tr
www.linak.com.tr

UNITED KINGDOM
LINAK UK Limited
Phone: +44 (0)121 544 2211
Fax: +44 (0)121 544 2552
E-mail: sales@linak.co.uk
www.linak.co.uk

DISTRIBUTORS

ARGENTINA
Novotec Argentina SRL
Phone: +[54] (11) 4303-8900
+[54] (11) 4303-8989
Fax: +[54] (11) 4032-0184
E-mail: info@novotecargentina.com
www.novotecargentina.com

AUSTRALIA
Ballarat Industrial Supplies
www.ballind.com.au

BL Shipways & Co
www.blshipway.com.au

Gas Strut Marine and Industrial
www.gasstrutmarine.com.au

Prime Motion & Control
www.primehyd.com.au

West Vic Industrial Supplies
www.westvicindustrial.com.au

COLOMBIA
MEM Ltda
Phone: +[57] (1) 334-7666
Fax: +[57] (1) 282-1684
E-mail: servicioalcliente@memltda.com.co
www.memltda.com.co

INDONESIA
Pt. Himalaya Everest Jaya
Phone: +6 221 544 8956,
+6 221 544 8965
Fax: +6 221 619 4658,
+6 221 619 1925
E-mail: hejplastic-div@centrin.net.id
www.hej.co.id

IRAN
Bod Inc.
Phone: +98 2188998635-6
Fax: +98 2188954481
E-mail: info@bod.ir
www.bod.ir

PERU
Percy Martin Del Aguila Ubillus
Phone: +51 99-883-9879

RUSSIAN FEDERATION
000 FAM
Phone: +7 812 3319333
Fax: +7 812 3271454
E-mail: purchase@fam-drive.ru
www.fam-drive.ru

SINGAPORE
Servo Dynamics Pte. Ltd.
Phone: +65 6844 0288
Fax: +65 6844 0070
E-mail: servodynamics@servo.com.sg
www.servo.com.sg

SOUTH AFRICA
Industrial Specialised Applications CC
Phone: +27 11 312 2292 or +27 11 2077600 (Switch Board)
Fax: +27 11 315 6999
E-mail: garth@isagroup.co.za
www.isaza.co.za

UNITED ARAB EMIRATES
Mechatronics
Phone: +971 4 267 4311
Fax: +971 4 267 4312
E-mail: mechtron@emirates.net.ae
www.mechatronics.ae

For contact details on other countries please visit *www.linak.com* or contact:

LINAK INTERNATIONAL
Phone: +45 73 15 15 15
Fax: +45 74 45 90 10
Fax: +45 73 15 16 13 (Sales)
E-mail: info@linak.com
www.linak.com

Terms of use
The user is responsible for determining the suitability of LINAK products for specific application. LINAK takes great care in providing accurate and up-to-date information on its products.
However, due to continuous development in order to improve its products, LINAK products are subject to frequent modifications and changes without prior notice. Therefore, LINAK cannot guarantee the correct and actual status of said information on its products.
While LINAK uses its best efforts to fulfil orders, LINAK cannot, for the same reasons as mentioned above, guarantee the availability of any particular product. Therefore, LINAK reserves the right to discontinue the sale of any product displayed on its website or listed in its catalogues or other written material drawn up by LINAK.
All sales are subject to the Standard Terms of Sale and Delivery for LINAK. For a copy hereof, please contact LINAK.

LINAK A/S reserve the right to make technical alterations

Copyright® LINAK 2014.10 MA-M9-02-258-K

WE IMPROVE YOUR LIFE