USER MANUAL

HOMELINE®
IMPROVING COMFORT

TWINDRIVE®
TD4 Advanced

To learn more about LINAK, please visit:
www.linak.com

LINAK®
WE IMPROVE YOUR LIFE

Contents

Preface ... 4

Important information ... 5

Safety instructions ... 5
- Safety issues ... 6
- Before installation, reinstallation or troubleshooting ... 9
- Before start-up ... 9
- During operation ... 9
- Misc ... 9

Only for EU markets ... 10
Only for Non EU markets ... 10
Misuse ... 10

Informations importantes ... 11

Consignes de sécurité ... 11
- Avant l´installation, ré-installation ou le dépannage ... 12
- Avant de démarage ... 12
- Pendant le fonctionnement ... 12
- Divers ... 12

Seulement pour les marchés au sein de l´UE ... 13
Seulement pour les marchés hors UE ... 13
Utilisation abusive ... 13

Repairs ... 14

Misc. on the TWINDRIVE® TD4 Advanced system ... 15

Description of the TWINDRIVE® TD4 Advanced system ... 15

Mounting instructions for the TWINDRIVE® system ... 16

TD4 Advanced - Start-up (How to pair Bluetooth connection) ... 17
- 1. Pairing your control ... 17
- 2. Pairing your smartphone or tablet ... 18
- 3. Pairing another device later ... 19
- Mechanical emergency lowering ... 20
- Electrical emergency lowering ... 21
- Cable strain relief ... 21

Functional description ... 22

Labels ... 23

Disposal of LINAK products ... 24

Main groups of disposal ... 25

Disposal of batteries ... 25

Drawing appendix ... 26

LINAK application policy ... 26

Addresses ... 28

Preface

Dear User,

We are delighted that you have chosen a product from LINAK®.
LINAK systems are high-tech products based on many years of experience in the manufacture and development of actuators, electric control boxes, controls and chargers.

This User Manual does not address the end-user. It is intended as a source of information for the manufacturer of the equipment or system only, and it will tell you how to install, use and maintain your LINAK electronics. It is the responsibility of the manufacturer of the end-use product to provide a User Manual where relevant safety information from this manual is passed on to the end-user.

We are sure that your LINAK product/system will give you many years of problem-free operation.
Before our products leave the factory they undergo full function and quality testing. Should you nevertheless experience problems with your LINAK product/system, you are always welcome to contact your local dealer.
LINAK subsidiaries and some distributors situated all over the world have authorised service centres, which are always ready to help you.

LINAK provides a warranty on all its products. This warranty, however, is subject to correct use in accordance with the specifications, maintenance being done correctly and any repairs being carried out at a service centre, which is authorised to repair LINAK products.
Changes in installation and use of LINAK products/systems can affect their operation and durability. The products are not to be opened by unauthorised personnel.

The User Manual has been written based on our present technical knowledge. We are constantly working on updating the information and we therefore reserve the right to carry out technical modifications.

LINAK A/S

Important information

Important information on LINAK® products can be found under the following headings:

Warning!
Failure to comply with these instructions may result in accidents involving serious personal injury.

Failing to follow these instructions can result in the product being damaged or being destroyed.

Safety instruction

General

Safe use of the system is possible only when the operating instructions are read completely and the instructions contained are strictly observed.

Failure to comply with instructions marked with the "NOTE" symbol may result in serious damage to the system or one of its components.

It is important for everyone who is to connect, install, or use the systems to have the necessary information and access to this User Manual. Follow the instructions for mounting – risk of injury if these instructions are not followed.

The appliance is not intended for use by young children or infirm persons without supervision.

If there is visible damage on the product it must not be installed.

Note that during construction of applications, in which the actuator is to be fitted, there must be no possibility of personal injury, for example squeezing of fingers or arms.

Assure free space for movement of the application in both directions to avoid blockade.

Only the power supply type SMPS001, SMPS002 or SMPS006, shall be used with the system (TD4 Advanced).
The power supply shall not be covered while operating to allow sufficient cooling of this appliance.

Furthermore take care about the connecting wires from the power supply to the TD4 Advanced, don’t damage this by overrun.

Assure free space for movement of application in both directions to avoid blockade.

The appliance is only to be used with the power supply unit provided with the appliance.

Safety issues

The builder of the equipment shall ensure that the use of the component complies with relevant standards – like the Machine Directive. Care must be taken to avoid squeezing of cables as it can cause movement of the system!

The SMPS001/002/006 must not be packed in heat insulating material, but must be placed so that it can emit waste heat to the surroundings. There are no ventilation holes to consider, the SMPS emits heat through its surface.

Only the power supply type SMPS001, SMPS002 or SMPS006, shall be used with the system (TD4 Advanced).

It is possible only to use 1 power supply (SMPS001, SMPS002 or SMPS006) for 2 TD4 systems. Remember speed may decrease when running 2 systems at the same time.

This device complies with part 15 of the FCC Rules. Operation is subject to the following two conditions:

(1) This device may not cause harmful interference, and

(2) This device must accept any interference received, including interference that may cause undesired operation

- **Statement – for all intentional and unintentional radiators:**
  Changes or modifications not expressly approved by the party responsible for compliance could void the user's authority to operate the equipment.

- **Statement for digital devices for Class B:**
  NOTE: This equipment has been tested and found to comply with the limits for a Class B diwgital device, pursuant to part 15 of the FCC Rules. These limits are designed to provide reasonable protection against harmful interference in a residential installation. This equipment generates, uses and can radiate radio frequency energy and, if not installed and used in accordance with the instructions it may cause harmful interference to radio communications. However, there is no guarantee that interference will not occur in a particular installation. If this equipment does cause harmful interference to radio or television reception, which can be determined by turning the equipment off and on, the user is encouraged to try to correct the interference by one or more of the following measures:

- Reorient or relocate the receiving antenna.
- Increase the separation between the equipment and the receiver.
- Connect the equipment into an outlet on a circuit different from that to which the receiver is connected.
- Consult the dealer or an experienced radio/ TV technician for help.

This device complies with Industry Canada licence-exempt RSS standard(s).

Operation is subject to the following two conditions:
(1) this device may not cause interference, and (2) this device must accept any interference, including interference that may cause undesired operation of the device.

Le présent appareil est conforme aux CNR d'Industrie Canada applicables aux appareils radio exempts de licence. L'exploitation est autorisée aux deux conditions suivantes :

(1) l'appareil nedoit pas produire de brouillage, et

(2) l'utilisateur de l'appareil doit accepter tout brouillage radioélectrique subi, même si le brouillage est susceptible d'en compromettre le fonctionnement.

Labeling Requirements:

This Class B digital apparatus complies with Canadian ICES-003.

Cet appareil numérique de la classe B est conforme à la norme NMB-003 du Canada.

Before installation, de-installation or troubleshooting:

- Stop the TD4 Advanced.
- Disconnect the power supply.
- Relieve the TD4 of any loads, which may be released during the work.

Before start-up:

- Make sure that the system has been installed as instructed in this User Manual.
- Make sure that the voltage is correct before the system is connected to the mains. (See TD4 label in the appendix).
- System connection. The individual parts must be connected before connecting to the mains.

During operation

- If the control box makes unusual noise or smells, switch off the mains voltage immediately.
- Take care that the cables are not damaged.
- Unplug the mains cable on mobile equipment before it is moved.

Misc:

The actuator system has a sound level below 55dB(A) in typical applications.

Updated manuals and declarations can always be found here:
www.linak.com/HOMELINE

Electromagnetic fields (EMF):
This LINAK appliance complies will all standards regarding electromagnetic fields (EMF). If handled properly and according to instructions in this user manual, the appliance is safe to use based on scientific evidence available today.

Only for EU markets

This appliance can be used by children aged from 8 years and above and persons with reduced physical, sensory or mental capabilities or lack of experience and knowledge if they have given supervision or instruction concerning use of the appliance in a safe way and understand the hazards involved.

Children shall not play with the appliance. Cleaning and user maintenance shall not be made by children without supervision.

Only for Non EU markets

Persons who do not have the necessary experience or knowledge of the product/products must not use the product/products. Besides, persons with reduced physical, sensory or mental abilities must not use the product/products, unless they are under surveillance or they have been thoroughly instructed in the use of the apparatus by a person who is responsible for the safety of these persons.

Moreover, children must be under surveillance to ensure that they do not play with the product.

Misuse

Do not overload the actuators – this can cause danger of personal injury and damage to the system.

Do not use the actuator system for lifting persons. Do not sit or stand on a table while operating – risk of personal injury.

Do not use the system in environments other than the intended indoor use

Informations importantes

Les informations importantes sur les produits LINAK® peuvent être trouvées dans les rubriques suivantes:

Attention!
Le non respect de ces instructions peut entraîner des accidents impliquant des blessures graves.

Ne pas suivre ces instructions peut entraîner l´endommagement ou destruction du produit.

Consignes de sécurité

Géneral

Le non respect de ces instructions peut entraîner des accidents impliquant des blessures graves.

Ne pas suivre ces instructions peut entraîner l´endommagement ou destruction du produit.

L´utilisation en toute sécurité du système n´est possible que si l´intégralité des instructions ont été lues et ont été strictement suivies.

Le non respect de se conformer aux instructions marquées du symbole "note" peut entraîner de graves dommages au système ou à un de ses composants.

Il est important pour tout individu qui connecte, installe, ou utilise le système d´avoir les informations nécessaires et l´accès à ce mannuel d´utilisation.

Suivez les instructions pour le montage – risque de blessure si ces instructions ne sont pas suivies.

L´appareil n´est pas destiné à être utilisé par des enfants ou des personnes handicapées sans surveillance.

S´il y a des dommages visibles sur le produit, l´installation ne doit pas être effectuée.

Prendre en compte lors de la construction du matériel, dans lequel l´actionneur est incorporé, qu´il ne doit y avoir aucune possibilité de blessures corporelles, telles que la compression des doigts ou des bras.

Assurez un espace libre autours du materiel pour éviter tout blocage.

Avant l´installation, ré-installation ou le dépannage:

- Arrêtez TD4 Advanced
- Retirez la prise du secteur
- Soulagez TD4 Advanced des toutes charges qui pourraient être émises lors de l´utilisation

Avant de démarage:

- Assurez-vous que le système a été installalé comme indiqué dans le mannuel d´utilisateur.
- Assurez-vous que la tension du boîtier de contrôle est correcte avant que le système soit connecté sur le secteur.
- Système de connection. Les différentes pièces doivent être connectées entre elles avant que le boîtier de contrôle soit connecté au secteur. Consultez le manuel d´utilisation si nécessaire.

Pendant le fonctionnement:

- Si le boîtier de contrôle émet un bruit ou odeurs inhabituelles, éteignez la tension immédiatement.
- Veuillez à ce que les cables ne soient pas endommagés.
- Débranchez le cable d´alimentation sur l´équipement mobile avant qu´il ne soit déplacé.
- Les produits ne doivent-être utilisés que dans un environement qui correspond à leur IP.

Divers:

Le système d´actionneur présente un niveau sonore inférieur à 55dB (A) dans des applications typiques.
Les mises à jours des manuels et autres informations peuvent-être trouvées sur www.linak.com/homeline

---

Electromagnetic fields (EMF):
This LINAK appliance complies will all standards regarding electromagnetic fields (EMF). If handled properly and according to instructions in this user manual, the appliance is safe to use based on scientific evidence available today.

Seulement pour les marchés au sein de l´UE:

Cet appareil peut-être utilisé par des enfants âgés de 8 ans et plus, ainsi que les personnes dont les capacités physiques, sensorielles ou mentales sont réduites ou ayant un manque d´expérience et de connaissance si elles ont bénéficié d´une surveillance ou d´instructions concernant l´utilisation de l´appareil en toute sécurité et compris les risques encourus.

Les enfants ne doivent pas jouer avec l´appareil. Le nettoyage et l´entretien ne doivent pas être rèalisés par des enfants sans surveillance.

Seulement pour les marchés hors UE.

Les personnes qui n´ont pas l´expérience ou les connaissances nécessaires sur le ou les produit(s) ne doivent pas le ou les utiliser. Par ailleurs, les personnes ayant des capacités physiques, sensorielles ou mentales réduites ne doivent pas utiliser le ou les produit(s), sauf si elles sont sous surveillance ou ont suivi une formation approfondie de l´utilisation de l´appareil par l´individu responsable de la securité de ces personnes.

De plus, les enfants doivent-être sous surveillance afin de s´assurer qu´ils ne jouent pas avec le produit.

Utilisation abusive:

Ne surchargez pas les actionneurs – cela peut engendrer un risque de blessures corporelles et endommager le système.

Ne pas utiliser les actionneurs pour soulever des personnes. Ne pas s´asseoir ou se tenir debout sur une table en fonctionnement – risque de blessures.

Ne pas utiliser le système dans dans des environnements autres que l´utilisation intérieure prévue.

Repairs

In order to avoid the risk of malfunction, all TWINDRIVE® repairs must only be carried out by authorised LINAK workshops or repairers, as special tools must be used and special gaskets must be fitted. TWINDRIVE under warranty must also be returned to authorised LINAK workshops.

DECLARATION OF INCORPORATION OF PARTLY COMPLETED MACHINERY

LINAK A/S
Smedevænget 8
DK - 6430 Nordborg

Name and address of the person authorized to compile the relevant technical documentation:
John Kling, Group Headquarters, Guderup, DK-6430 Nordborg, email jkl@linak.com

Herewith declares that LINAK Actuators and Actuator Systems comply with the following parts of the Machinery Directive 2006/42/EC, ANNEX I, *Essential health and safety requirements relating to the design and construction of machinery*:
1.5.1 Electricity supply: *Directive 2006/95/EC on the harmonization of the laws of Member States relating to electrical equipment designed for use within certain voltage limits.*
1.5.10 Radiation, 1.5.11 External radiation: *Directive 2004/108/EC on the approximation of the laws of the Member States relating to electromagnetic compatibility.*

The relevant technical documentation is compiled in accordance with part B of Annex VII and that this documentation or part hereof will be transmitted by post or electronically to a reasoned request by the national authorities.

This partly completed machinery must not be put into service until the final machinery into which it is to be incorporated has been declared in conformity with the provisions of this Directive, where appropriate.

Date: 2010-01-01

Signature:

John Kling
Certification and Regulatory Affairs

Misc. on the TWINDRIVE® TD4 Advanced system

This system is a TWINDRIVE system developed for leisure beds and for indoor use in private homes.

Warranty
There is 36 months' warranty on the TWINDRIVE® products against manufacturing faults calculated from the production date of the individual products (see label). LINAK A/S' warranty is only valid in so far as the equipment has been used and maintained correctly and has not been tampered with. Furthermore, the system must not be exposed to violent treatment. In the event of this, the warranty will be ineffective/invalid. For further details, please see standard terms of sale and delivery for LINAK A/S.

Maintenance
Clean dust and dirt on the outside of the system at appropriate intervals and inspect them for damage and breaks. Inspect the connections, cables and plugs and check for correct functioning as well as fixing points.

The cleaners and disinfectants must not be highly alkaline or acidic (pH value 6-8).

It is not allowed to use solvents for cleaning up.

Max. load running back and leg end motors at the same time in upward direction is 280 Nm on back motor, and 200 Nm on leg end motor.

For customers in the US/Canada:
The mains cable for this product has a polarised plug (one blade is wider than the other). It will only fit in a polarised outlet one way. If it does not fit fully in the outlet, reverse the plug. If it still does not fit, contact a qualified electrician to install a proper outlet. Do not change the plug in any way.

Description of the TWINDRIVE® TD4 Advanced system

Each TWINDRIVE® TD4 Advanced unit consists of 2 internal motors and a built-in control box, which makes it a very compact unit. The mains cable is exchangeable. Only the handset must be paired.

Application of the TWINDRIVE® TD4 Advanced system:
Irrespective of the load the **Duty cycle: 10% ~ max. 1 min. at continous use followed by 9 min. not in use.**

Do not turn on the system if it is not mounted in a bed.

TD4 is a Bluetooth® based system, which means you can use hand controls based on Bluetooth®.
LINAK® offers a range of compatible hand controls: HC05BL, HC10BL, HC20BL, HC30BL and HB10BL. Alternatively an App can be downloaded to use a smartphone as handset.

You can pair four hand controls to one TD4. You can also pair both hand controls and app controls to the same TD4 Advanced, but only 4 controls in total. If you pair more hand controls than the TD4 Advanced can manage, the first paired hand control will be forgotten.

This user manual will give you a detailed description on how to pair your hand controls with your TD4 Advanced.

Mounting instructions for the TWINDRIVE® system:

Mounting is made by pushing the TD4 unit into the bed bracket and thereafter slide the closing devices on. It is IMPORTANT to be completely sure that the closing devices are in place before using the TD4.

Do not drive the TD4 Advanced system without the closing devices mounted

The bed brackets must have a smooth surface without burs and welding blops in the area where the TD4 Advanced is mounted.

1 Push the TD4 Advanced unit into the bed bracket

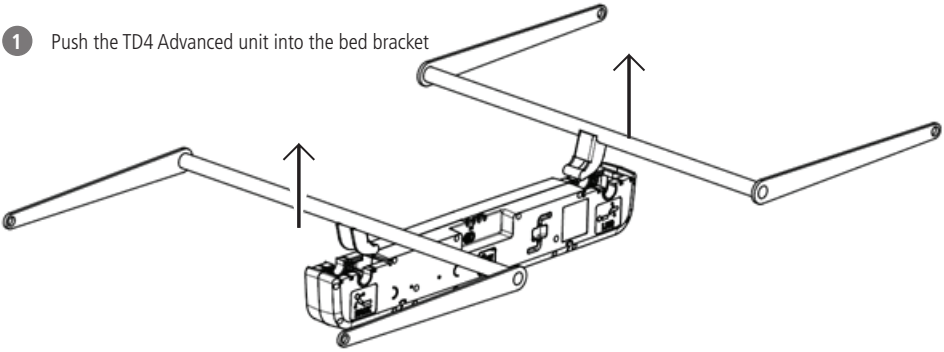

2 Lead the closing device in place

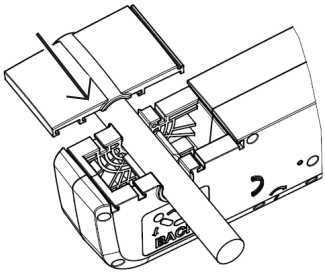

3 Press the closing device in final position

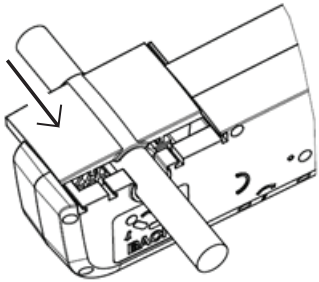

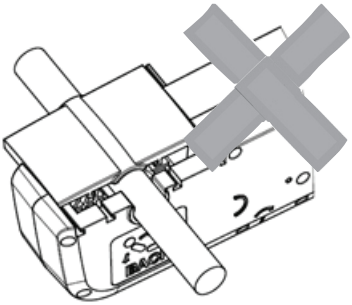

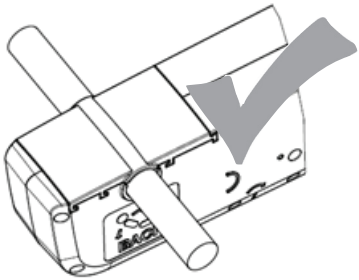

TD4 Advanced - Start-up (How to pair Bluetooth connection)

It is possible to pair multiple devices to the TD4 via Bluetooth®. See following instructions:

1. **Pairing your control**
   Connect the TD4 to the mains via the connection cable. Now the TD4 will be in pairing mode in 3 minutes and the Under Bed Light will blink to indicate this.

   Take you hand control and press the Back "Up" and "Down" buttons at the same time. Now the light will blink a little bit longer to indicate that the control and the TD4 paired up. The TD4 will stay in pairing mode and it is possible to connect more controls using the same procedure as above. Be aware; you have to wait 5 seconds after pairing control 1 until you can pair control number 2. To get the system out of pairing mode – simply press any button on an already paired device.

   When you operate the TD4 with the two controls you need to wait 5 seconds from operating with control 1 until you can operate control 2.

1

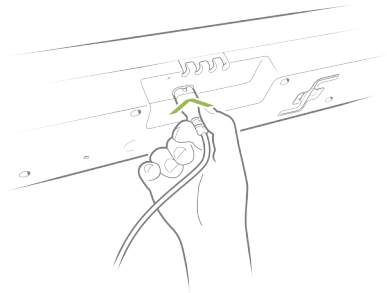

2

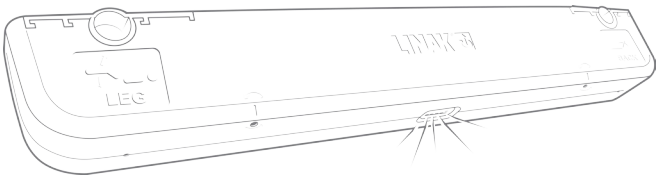

3

2. **Pairing your smartphone or tablet**

Connect the TD4 to the mains via the connection cable. Now the TD4 will be in pairing mode in 3 minutes and the Under Bed Light will blink to indicate this.

Enable Bluetooth® on your smartphone/tablet. Open the TD4 app and a "search bed" page will be displayed. A list of previously connected Twindrives and Twindrives in pairing mode will appear. Find the TD4 you wish to connect on the list and tap to connect. The smartphone/tablet and the TD4 are now paired up and the app will display the operation page.

1

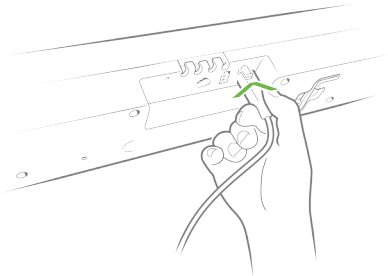

2

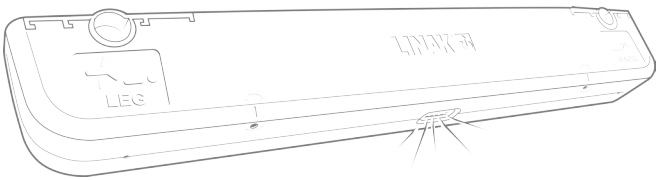

3

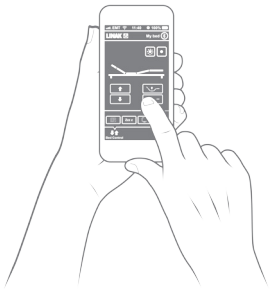

3. **Pairing another device later**
   If you wish to connect another control or a smartphone/tablet to the TD4 later, just disconnect, wait 2 minutes and connect the TD4 to the mains to get it in pairing mode again. See instructions 1 or 2 above to find out how to pair the device, you want.

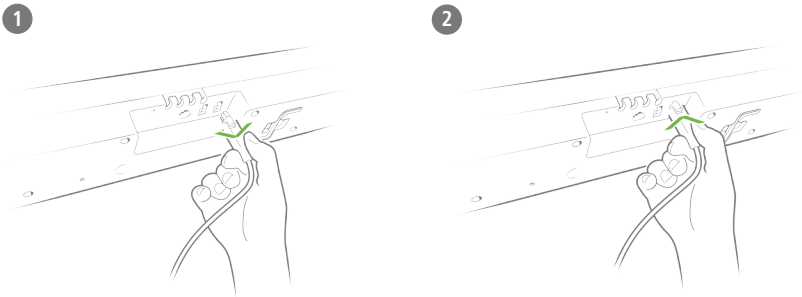

The TD4 will be in pairing mode every time the system has been out of power and connects again. To get the system out of pairing mode – simply press any button on an already paired device.

If you wanted to pair a device, but did not make it in the 3 minutes pairing mode, please disconnect the TD4 from the mains. Connect the TD4 to the mains again – now the TD4 will be in pairing mode for 3 minutes.

Mechanical emergency lowering

Emergency lowering is meant for lowering the bed if a power failure occurs and the bed needs to be driven down into horizontal position.

Disconnect the TD4 from the mains. Take the hex key on the side of the TD4. Underneath the TD4 are two gaps for mechanical lowering – simply place the hex key in the gap, one end at a time, and turn the hex key in the direction the arrow indicates.

1

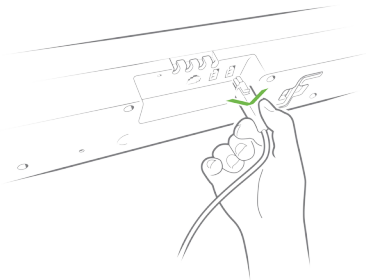

2

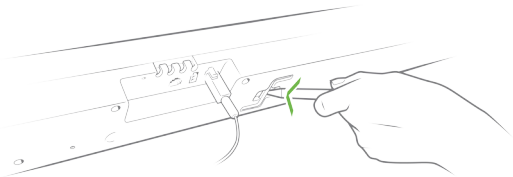

3

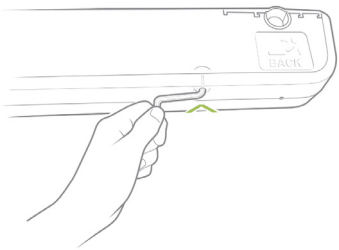

It is important to turn the key in the direction indicated on the housing. Turning the key in the wrong direction can wreck the inner hex and make mechanical emergency lowering impossible.

Do not use an electric screwdriver for lowering, use the enclosed hex key on the TD4.

Electrical emergency lowering

Connection of emergency lowering:

1. Remove the SMPS from the mains.
2. Notice! If a locking device is mounted on the SMPS remove it now.
3. Unplug the connection cable from the SMPS
4. Connect the connection cable to the battery box for emergency lowering.

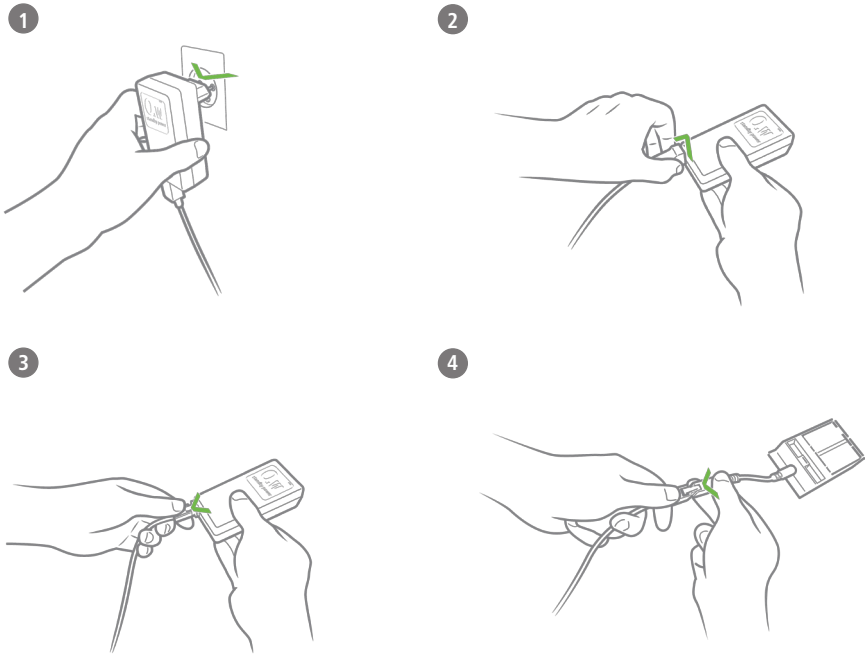

Cable strain relief

It is important to use the cable relief on the TD4. By using the relief you avoid that the connection cable plug is pulled out of the TD4 resulting in a malfunction.

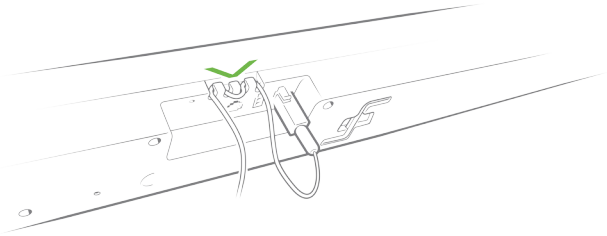

Functional description

Hand Control HB10BL:

Up – down back motor
Up – down leg motor
Common operation up/down (option)

Light Button

Hand Control HC05BL:

Up – down back motor
Up – down leg motor
Common operation up/down (option)

Light Button

Hand Control HC10BL:

Up – down back motor
Up – down leg motor
Common operation up/down (option)

Light Button

Hand Control HC20BL:

Up – down back motor

Up – down leg motor

up to 3 extra channels

Common operation up/down (option)

Memory positions (3 positions)

Store Button

Light Button

Torch - Light Button

Hand Control HC30BL:

Up / down drive - back

Up / down drive - leg

Common operation up/down

Torch - Light Button

Memory positions

Store Button

Up / down drive - neck

Up / down drive - foot

Under bed light

Label for TD4 Advanced

Label for HB10

Label for HC05

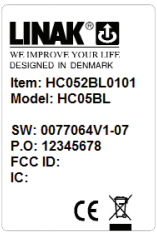

Label for HC10

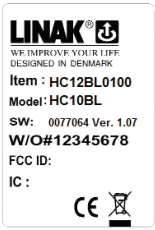

Label for HC20

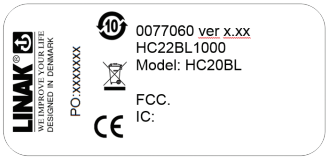

Label for HC30

Disposal of LINAK products

As LINAK customers often ask us how our products can be disposed of or scrapped we have prepared this guidance that enables a classification to different waste fractions for recycling or combustion.

Guidance

We recommend to disassemble our product into as many fractions as possible at the disposal and try to make it recycable. As examples of main groups within waste fractions we can mention:

Metal, plastic, cable shoe, combustible waste and collection for recovery.

Some of these main groups can be subdivided, e.g. metal can be divided into iron, stainless steel and aluminium and alloy steel. Plastic can e.g. be divided into ABS, PA, PE and PP.

As an example of sorting, please find below a list stating in which recycling groups the different components of LINAK products ought to be placed:

Product	Components	Recycling group
Actuator:	Spindle and motor Plastic housing Cable	Scrap Plastic recycling or combustion Cable scrap or combustion
Massage motor:	Plastic housing Cable	Plastic recycling or combustion Cable scrap or combustion
TWINDRIVE:	PCB Plastic housing Cable Transformer Scrap Batteries Spindle and motor	Electronics scrap Plastic recycling or combustion Cable scrap Recovery Scrap
Handset/Control:	Plasic housing PCB Batteries	Plastic recycling or combustion Electronics scrap Recovery

By now almost all our casted plastic parts are supplied with an interior code for plastic type and fibre contents, if any.

Main groups of disposal

Product main groups	Scrap	Cable scrap	Electronics scrap	Plastic recycling or combustin	Comments
TD4	X	X	X		
HB10BL			X	X	
HC05			X	X	
HC10BL			X	X	
HC20BL			X	X	
HC30BL			X	X	

Disposal of batteries

Details regarding safe disposal of used and leaking batteries:
Batteries should be disposed in accordance with appropriate federal, state and local regulations. LINAK recommends that used or leaking batteries are disposed through the local recycling system. Please do not throw used or leaking batteries in normal household waste or in nature. This will cause damage to the enviroment.

How to deal with leaking batteries

Leaking batteries should be disposed as described above.
If leaking batteries are discovered in the product the batteries must be removed at once to minimise damage to the product. If leaking batteries are left in the product, it may become defective.

It is recommended to use plastic gloves when handling leaking batteries. The contents of leaking batteries can cause chemical burns and respiratory irritation.

If exposed to the contents of a leaking battery, please wash with soap and water. If irritation persists, please seek medical attention. In case of eye contact, please flush eyes thoroughly with water for 15 minutes and seek medical attention.

LINAK APPLICATION POLICY

The purpose of the application policy is to define areas of responsibilities in relation to applying a LINAK product defined as hardware, software, technical advice, etc. related to an existing or a new customer application.

LINAK products as defined above are applicable for a wide range of applications within the Medical, Furniture, Desk, and Industry areas. Yet, LINAK cannot know all the conditions under which LINAK products will be installed, used, and operated, as each individual application is unique.

The suitability and functionality of the LINAK product and its performance under varying conditions (application, vibration, load, humidity, temperature, frequency, etc.) can only be verified by testing, and shall ultimately be the responsibility of the LINAK customer using any LINAK product.

LINAK shall be responsible solely that the LINAK products comply with the specifications set out by LINAK and it shall be the responsibility of the LINAK customer to ensure that the specific LINAK product can be used for the application in question.

DRAWING APPENDIX

TWINDRIVE® TD4 System Advanced

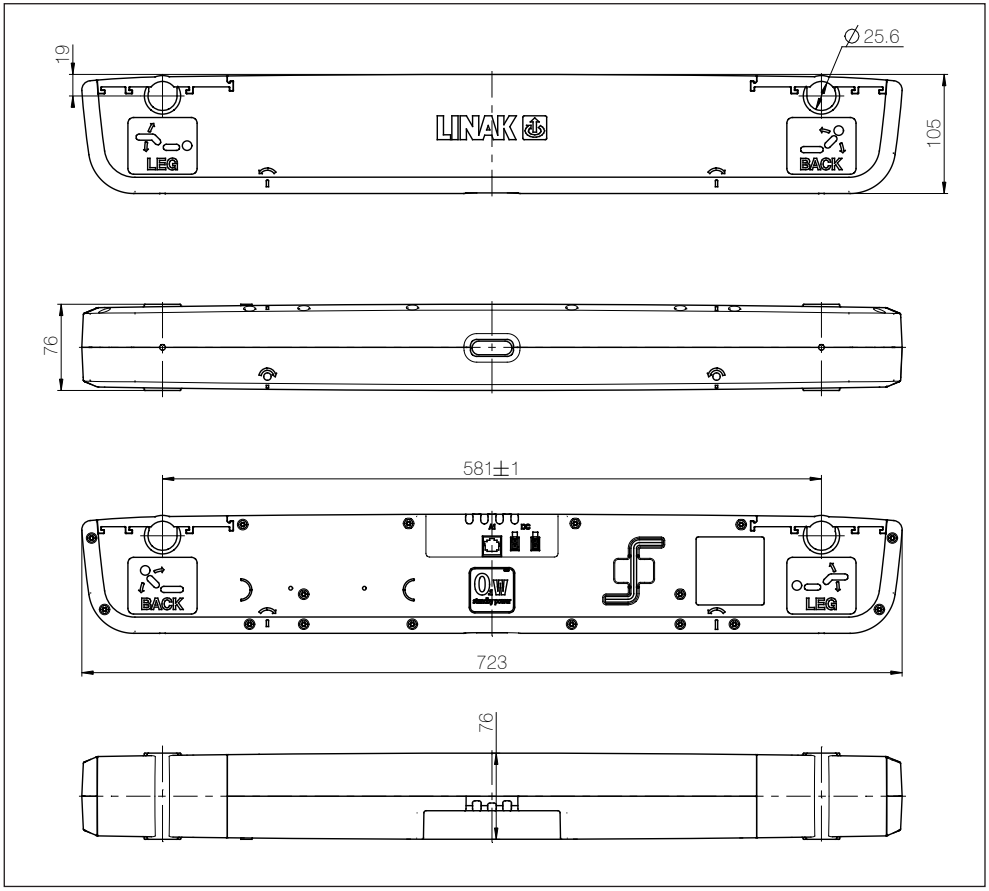

HB10BL Hand Control

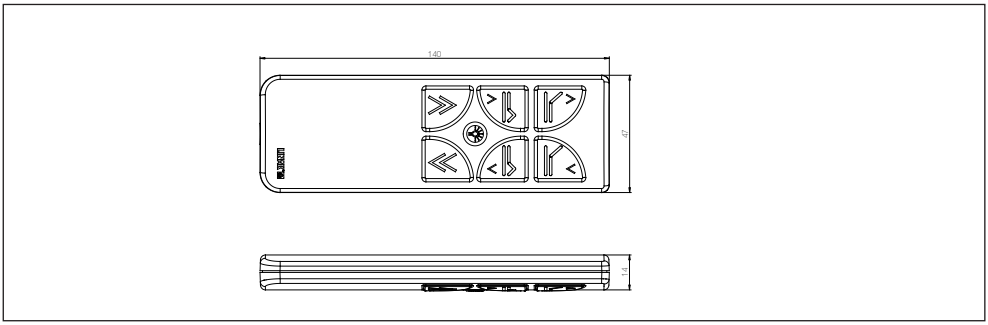

HC05BL Hand Control

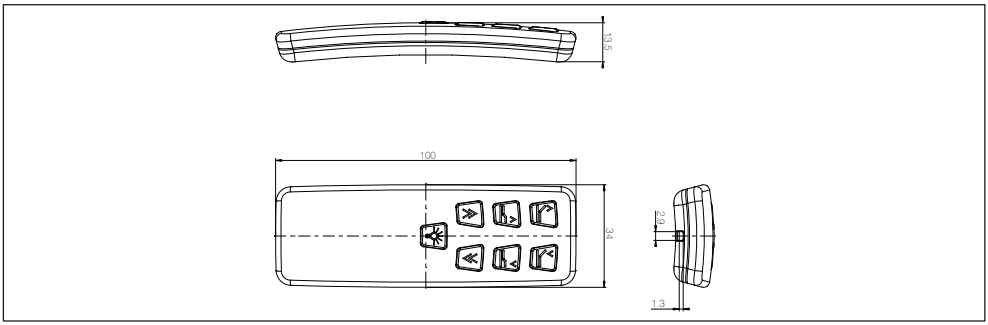

HC10BL Hand Control

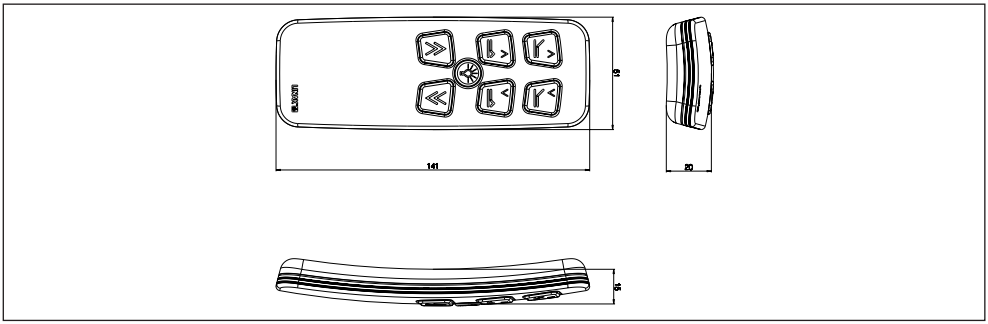

HC20BL Hand Control

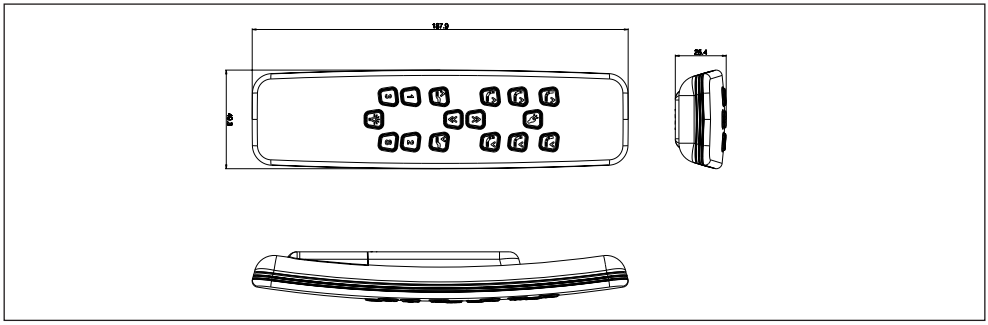

HC30BL Hand Control

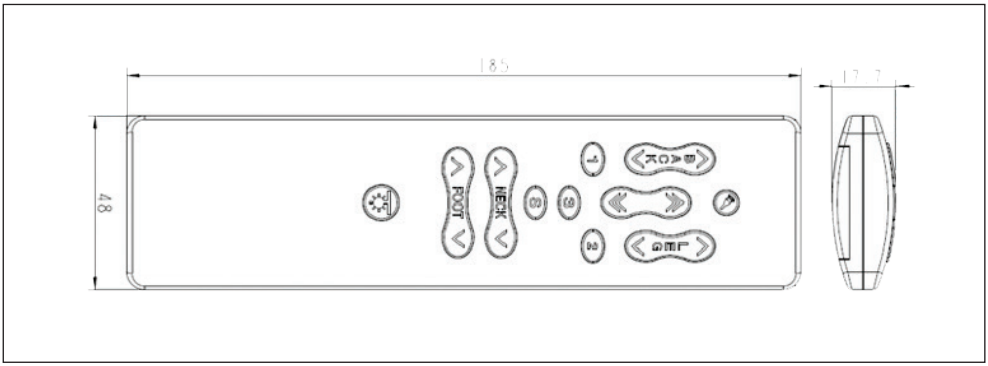

FACTORIES

CHINA
LINAK (Shenzhen) Actuator Systems, Ltd.
Phone: +86 755 8610 6656
Fax: +86 755 8610 6990
E-mail: sales@linak.cn
www.linak.cn

DENMARK
LINAK A/S - Group Headquarters, Guderup
Phone: +45 73 15 15 15
Fax: +45 74 45 80 48
Fax: +45 73 15 16 13 (Sales)
E-mail: info@linak.com
www.linak.com

SLOVAKIA
LINAK Slovakia s.r.o.
Phone: +421 51 75 63 414
Fax: +421 51 75 63 410
E-mail: jp@linak.sk
www.linak.com

USA
LINAK U.S. Inc.
North and South American Headquarters
Phone: +1 502 253 5595
Fax: +1 502 253 5596
E-mail: info@linak-us.com
www.linak-us.com

SUBSIDIARIES

AUSTRALIA
LINAK Australia Pty. Ltd
Phone: +61 3 8796 9777
Fax: +61 3 8796 9778
E-mail: sales@linak.com.au
www.linak.com.au

AUSTRIA
LINAK Repräsentanz
Österreich (Wien)
Phone: +43 (1) 890 7446
Fax: +43 (1) 890 744615
E-mail: info@linak.de
www.linak.at

BELGIUM & LUXEMBOURG
LINAK Actuator-Systems NV/SA
Phone: +32 (0)9 230 01 09
Fax: +32 (0)9 230 88 80
E-mail: beinfo@linak.be
www.linak.be

BRAZIL
LINAK Do Brasil Comércio De Atuadores Ltda.
Phone: +55 (11) 2832 – 7070
Fax: +55 (11) 2832 – 7060
E-mail: info@linak.com.br
www.linak.com.br

CANADA
LINAK Canada Inc.
Phone: +1 502 253 5595
Fax: +1 416-255-7720
E-mail: info@linak.ca
www.linak-us.com

CZECH REPUBLIC
LINAK C&S S.R.O.
Phone: +420581741814
Fax: +420581702452
E-mail: ponizil@linak.cz
www.linak.cz

DENMARK
LINAK Danmark A/S
Phone: +45 86 80 36 11
Fax: +45 86 82 90 51
E-mail: linak@linak-silkeborg.dk
www.linak.dk

FINLAND
LINAK OY
Phone: +358 10 841 8700
Fax: +358 10 841 8729
E-mail: linak@linak.fi
www.linak.fi

FRANCE
LINAK France E.U.R.L
Phone: +33 (0) 2 41 36 34 34
Fax: +33 (0) 2 41 36 35 00
E-mail: linak@linak.fr
www.linak.fr

GERMANY
LINAK GmbH
Phone: +49 6043 9655 0
Fax: +49 6043 9655 60
E-mail: info@linak.de
www.linak.de

INDIA
LINAK A/S India Liaison Office
Phone: +91 120 4734613
Fax: +91 120 4273708
E-mail: info@linak.in
www.linak.in

IRELAND
LINAK UK Limited - Ireland
Phone: +44 (0)121 544 2211
Fax: +44 (0)121 544 2552
+44 (0)796 855 1606 (UK Mobile)
+35 387 634 6554 (Republic Of Ireland Mobile)
E-mail: sales@linak.co.uk
www.linak.co.uk

ITALY
LINAK Italia S.r.l.
Phone: +39 02 48 46 33 66
Fax: +39 02 48 46 82 52
E-mail: info@linak.it
www.linak.it

JAPAN
LINAK K.K.
Phone: 81-45-533-0802
Fax: 81-45-533-0803
E-mail: linak@linak.jp
www.linak.jp

MALAYSIA
LINAK Actuators Sdn. Bhd.
Phone: +60 4 210 6500
Fax: +60 4 226 8901
E-mail: info@linak-asia.com
www.linak.my

NETHERLANDS
LINAK Actuator-Systems B.V.
Phone: +31 76 5 42 44 40
Fax: +31 76 5 42 61 10
E-mail: info@linak.nl
www.linak.nl

NEW ZEALAND
LINAK New Zealand Ltd.
Phone: +64 9580 2071
Fax: +64 9580 2072
E-mail: nzsales@linak.com.au
www.linak.co.nz

NORWAY
LINAK Norge AS
Phone: +47 32 82 90 90
Fax: +47 32 82 90 98
E-mail: info@linak.no
www.linak.no

POLAND
LINAK Polska
Phone: +48 (22) 500 28 74
Fax: +48 (22) 500 28 75
E-mail: dkreh@linak.dk
www.linak.pl

REPUBLIC OF KOREA
LINAK Korea Ltd.
Phone: +82-(0)2-6231-1515
Fax: +82-(0)2-6231-1516
E-mail: scully@linak.kr
www.linak.kr

RUSSIAN FEDERATION
000 LINAK
Phone: +7 495 280 14 26
Fax: +7 495 687 14 26
E-mail: info@linak.ru
www.linak.ru

SPAIN
LINAK Actuadores, S.L.u
Phone: +34 93 588 27 77
Fax: +34 93 588 27 85
E-mail: esma@linak.es
www.linak.es

SWEDEN
LINAK Scandinavia AB
Phone: +46 8 732 20 00
Fax: +46 8 732 20 50
E-mail: info@linak.se
www.linak.se

SWITZERLAND
LINAK AG
Phone: +41 43 388 31 88
Fax: +41 43 388 31 87
E-mail: info@linak.ch
www.linak.ch

TAIWAN
LINAK A/S Taiwan Representative Office
Phone: +886 2 27290068
Fax: +886 2 27290096
Mobile: +886 989292100
E-mail: michael.chen@linak.com.tw
www.linak.com.tw

TURKEY
LINAK İth. İhr. San. ve Tic. A.Ş.
Phone: + 90 312 4726338
Fax: + 90 312 4726635
E-mail: info@linak.com.tr
www.linak.com.tr

UNITED KINGDOM
LINAK UK Limited
Phone: +44 (0)121 544 2211
Fax: +44 (0)121 544 2552
E-mail: sales@linak.co.uk
www.linak.co.uk

DISTRIBUTORS

ARGENTINA
Novotec Argentina SRL
Phone: 011-4303-8989/8900
Fax: 011-4032-0184
E-mail: info@novotecargentina.com
www.novotecargentina.com

AUSTRALIA
Ballarat Industrial Supplies
www.ballind.com.au

BL Shipways & Co
www.blshipway.com.au

Gas Strut Marine and Industrial
www.gasstrutmarine.com.au

Prime Motion & Control
www.primehyd.com.au

West Vic Industrial Supplies
www.westvicindustrial.com.au

COLOMBIA
MEM Ltda
Phone: +[57] (1) 334-7666
Fax: +[57] (1) 282-1684
E-mail: servicioalcliente@memltda.com.co
www.memltda.com.co

INDIA
Mechatronics Control Equipments India Pvt Ltd
Phone: +91-44-28558484/85,
E-mail: bala@mechatronicscontrol.com
www.mechatronicscontrol.com

INDONESIA
Pt. Himalaya Everest Jaya
Phone: +6 221 544 8956/8965,
Fax: +6 221 619 4658/1925
E-mail: hejplastic-div@centrin.net.id
www.hej.co.id

IRAN
Bod Inc.
Phone: +98 2188998635-6
Fax: +98 2188954481
E-mail: info@bod.ir
www.bod.ir

RUSSIAN FEDERATION
000 FAM
Phone: +7 812 3319333
Fax: +7 812 3271454
E-mail: purchase@fam-drive.ru
www.fam-drive.ru

SINGAPORE
Servo Dynamics Pte. Ltd.
Phone: +65 6844 0288
Fax: +65 6844 0070
E-mail: servodynamics@servo.com.sg
www.servo.com.sg

SOUTH AFRICA
Industrial Specialised Applications CC
Phone: +27 11 312 2292 or +27 11 2077600 (Switch Board)
Fax: +27 11 315 6999
E-mail: garth@isagroup.co.za
www.isaza.co.za

UNITED ARAB EMIRATES
Mechatronics
Phone: +971 4 267 4311
Fax: +971 4 267 4312
E-mail: mechtron@emirates.net.ae
www.mechatronics.ae

For contact details on other countries please visit www.linak.com or contact:

LINAK INTERNATIONAL
Phone: +45 73 15 15 15
Fax: +45 74 45 90 10
Fax: +45 73 15 16 13 (Sales)
E-mail: info@linak.com
www.linak.com

Copyright© LINAK 2016.01 MA-M9-02-631 LINAK A/S reserve the right to make technical alterations

Terms of use
The user is responsible for determining the suitability of LINAK products for specific application. LINAK takes great care in providing accurate and up-to-date information on its products.
However, due to continuous development in order to improve its products, LINAK products are subject to frequent modifications and changes without prior notice. Therefore, LINAK cannot guarantee the correct and actual status of said information on its products.
While LINAK uses its best efforts to fulfil orders, LINAK cannot, for the same reasons as mentioned above, guarantee the availability of any particular product. Therefore, LINAK reserves the right to discontinue the sale of any product displayed on its website or listed in its catalogues or other written material drawn up by LINAK.
All sales are subject to the Standard Terms of Sale and Delivery for LINAK. For a copy hereof, please contact LINAK.

WE IMPROVE YOUR LIFE