# Setting Up WiFi

802.11ac Wave 2 Router

Spectrum

## Identify your equipment

*Note: You should already have a coax cable connected to your modem.*

Coax Cord

Power Cord

Ethernet Cable

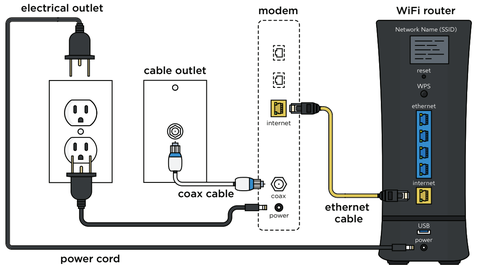


## 1 Unplug the modem

- **a** Make sure the modem is connected and activated before installing this router.
- **b** Unplug the power cable from the modem, and then plug it back in.
- **c** After you plug in the modem, wait for it to connect to the network (about 2 to 5 minutes) before proceeding to the next step.

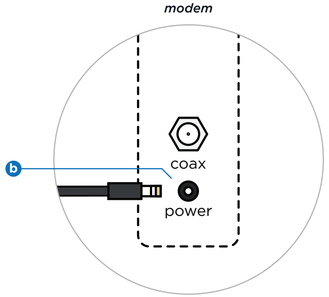


## 2 Connect the modem and the WiFi router

- **a** Connect one end of the Ethernet cable to the modem, and the other end to the yellow internet port on the WiFi router.
- **b** Plug the power cord into the WiFi router, then plug the other end into an electrical outlet.
- **c** Wait for the WiFi light on the front panel of the WiFi router to turn on.

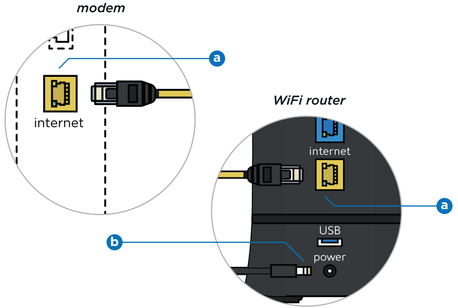


## 3 Connect a wireless device to the WiFi router

- **a** On your device, make sure your WiFi is turned on, then open the WiFi connections.
- **b** Select the unique network name (SSID) as printed on the WiFi router and on the enclosed stickers. If your device is 5 GHz capable, connecting to the 5G network may provide a better experience.
- **c** Enter the WiFi password as printed on the WiFi router. This password is also printed on the stickers included with the router.

Follow steps A-C to connect other devices.

### Tips

To get the best WiFi coverage, place the WiFi router in a central location in your home. Also, avoid placing the device in the basement, a desk drawer or other enclosed area, as this can affect your signal strength.

Place the WiFi router away from household electronics like baby monitors, microwaves and wireless headsets. These can sometimes interfere with your signal.

### Need more help?

***In-home WiFi***

spectrum.net/inhomewifi

***Business WiFi***

spectrumbusiness.net/businesswifi

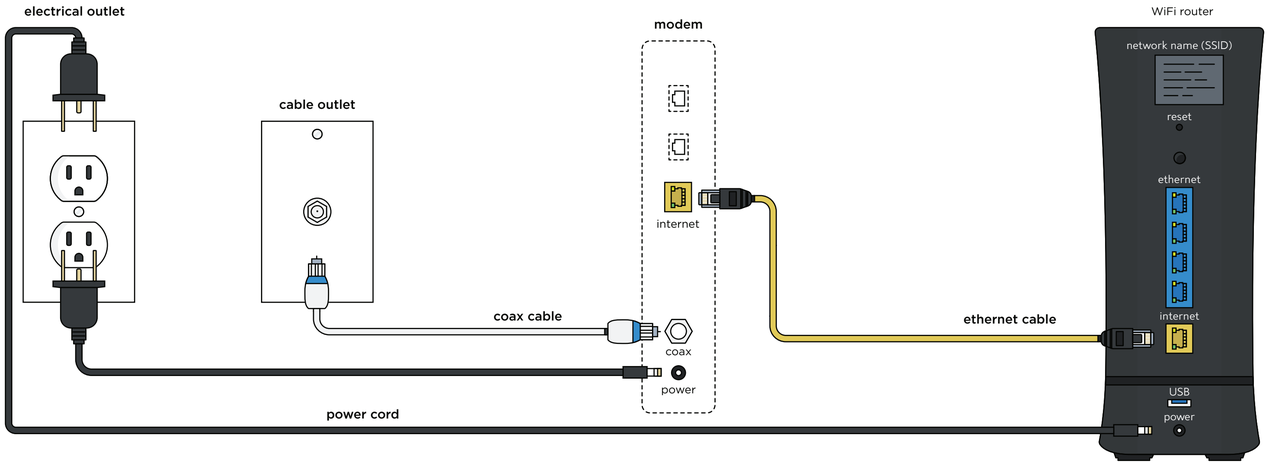


540.0XXXX.005

# Wireless Router Safety Information

**Model: RAC2V1U**

## Federal Communication Commission (FCC) Interference Statement

This device complies with Part 15 of the FCC Rules. Operation is subject to the following two conditions: (1) This device may not cause harmful interference, and (2) this device must accept any interference received, including interference that may cause undesired operation.

This equipment has been tested and found to comply with the limits for a Class B digital device, pursuant to Part 15 of the FCC Rules. These limits are designed to provide reasonable protection against harmful interference in a residential installation. This equipment generates, uses and can radiate radio frequency energy and, if not installed and used in accordance with the instructions, may cause harmful interference to radio communications. However, there is no guarantee that interference will not occur in a particular installation. If this equipment does cause harmful interference to radio or television reception, which can be determined by turning the equipment off and on, the user is encouraged to try to correct the interference by one of the following measures:

- Reorient or relocate the receiving antenna.
- Increase the separation between the equipment and receiver.
- Connect the equipment into an outlet on a circuit different from that to which the receiver is connected.
- Consult the dealer or an experienced radio/TV technician for help.

**5GHz Wireless Statement:**

For operation within the 5.15~5.25GHz and 5.47~5.725GHz frequency ranges, this device is restricted to indoor environments.

This device meets all the other requirements specified in Part 15E, Section 15.407 of the FCC Rules.

**FCC Caution:**

Any changes or modifications not expressly approved by the party responsible for compliance could void the user's authority to operate this equipment. This transmitter must not be co-located or operating in conjunction with any other antenna or transmitter.

**Radiation Exposure Statement:**

This equipment complies with FCC radiation exposure limits set forth for an uncontrolled environment. This equipment should be installed and operated with minimum distance 44 cm between the radiator & your body.

## Safety Notices

Read these instructions carefully before operating the Spectrum Wireless Router.

- Do not use this device in a humid space, in the rain, or near splashing water.
- Do not install during lightning or thunder storms.
- Do not cover any ventilation openings in the device housing.
- Do not place the device near heat sources such as radiators or stoves.
- Clean the device only with a clean, dry cloth. Do not use liquid or chemical cleaners.
- Avoid static discharge when touching the device by first touching a separate metal object.
- Keep the device away from children and pets.
- Place the device on a cool surface. Failure to do so may result in overheating which can cause extreme damage.
- Do not attempt to disassemble the device. Use only according to instructions.
- Do not dispose of the device in a trash container. Please recycle.

**Disconnecting the Device:**

If the wireless router becomes damaged or encounters some other abnormality, disconnect the power adapter from the AC wall outlet immediately.

**Temperature and Altitude:**

Install the device in a location not to exceed the maximum temperature of 104°F (40°C). Regular operating altitude is 2000 m, and maximum operating altitude is 3000 m.

540.0XXXX.005