MEASUREMENT REPORT

FCC PART 15.231(a)

FCC ID:	XCO-PRCII
APPLICANT:	Hansong (Nanjing) Technology Ltd.
Application Type:	Certification
Product:	Platform remote control
Model No.:	PRCII
Brand Name:	Platin
FCC Classification:	FCC Part 15 Security/remote control Transmitter (DSC)
FCC Rule Part(s):	Part 15.231(a)
Test Procedure(s):	ANSI C63.10-2013
Test Date:	March 16 ~ April 10, 2020

Reviewed By: (Jame Yuan)

Approved By: (Robin Wu)

ACCREDITED
TESTING LABORATORY
CERTIFICATE #3628.01

The test results relate only to the samples tested.

This equipment has been shown to be capable of compliance with the applicable technical standards as indicated in the measurement report and was tested in accordance with the measurement procedures specified in ANSI C63.10-2013. Test results reported herein relate only to the item(s) tested.

The test report shall not be reproduced except in full without the written approval of MRT Technology (Suzhou) Co., Ltd.

Revision History

Report No.	Version	Description	Issue Date	Note
2001RSU022-U2	Rev. 01	Initial Report	04-26-2020	Valid

CONTENTS

Description Page

1. INTRODUCTION 6

1.1. Scope 6
1.2. MRT Test Location 6

2. PRODUCT INFORMATION 7

2.1. Equipment Description 7
2.2. EUT Setup and Test Mode 7
2.3. Test Configuration 7
2.4. EMI Suppression Device(s)/Modifications 7
2.5. Labeling Requirements 7

3. DESCRIPTION OF TEST 8

3.1. Evaluation Procedure 8
3.2. AC Line Conducted Emissions 8
3.3. Radiated Emissions 9

4. ANTENNA REQUIREMENTS 10

5. TEST EQUIPMENT CALIBRATION DATE 11

6. MEASUREMENT UNCERTAINTY 12

7. TEST RESULT 13

7.1. Summary 13
7.2. Conducted Emission 14
7.2.1. Test Limit 14
7.2.2. Test Setup 14
7.2.3. Test Result 14
7.3. Radiated Emissions 15
7.3.1. Test Limit 15
7.3.2. Test Setup 18
7.3.3. Test Results 19
7.4. 20dB & 99% Bandwidth 23
7.4.1. Test Limit 23
7.4.2. Test Procedure used 23
7.4.3. Test Setting 23
7.4.4. Test Setup 23
7.4.5. Test Result 24
7.5. Release Time 26

7.5.1. Test Limit 26
7.5.2. Test Procedure..... 26
7.5.3. Test Setup..... 26
7.5.4. Test Result..... 27
7.6. Duty Cycle 28
7.6.1. Test Limit 28
7.6.2. Test Procedure..... 28
7.6.3. Test Setup..... 28
7.6.4. Test Setup..... 29

8. CONCLUSION..... 30

Appendix A - Test Setup Photograph 31

Appendix B - EUT Photograph..... 32

General Information

Applicant:	Hansong (Nanjing) Technology Ltd.
Applicant Address:	8th Kangping Road, Jiangning Economy and Technology Development Zone, Nanjing, 211100
Manufacturer:	Hansong (Nanjing) Technology Ltd.
Manufacturer Address:	8th Kangping Road, Jiangning Economy and Technology Development Zone, Nanjing, 211100
Test Site:	MRT Technology (Suzhou) Co., Ltd
Test Site Address:	D8 Building, No.2 Tian'edang Rd., Wuzhong Economic Development Zone, Suzhou, China
Test Device Serial No.:	202001008

Test Facility / Accreditations

Measurements were performed at MRT Laboratory located in Tian'edang Rd., Suzhou, China.

- **MRT facility is a FCC registered (MRT Designation No. CN1166) test facility with the site description report on file and has met all the requirements specified in ANSI C63.4-2014.**
- **MRT facility is an IC registered (MRT Reg. No. 11384A-1) test laboratory with the site description on file at Industry Canada.**
- **MRT facility is a VCCI registered (R-20025, G-20034, C-20020, T-20020) test laboratory with the site description on file at VCCI Council.**
- **MRT Lab is accredited to ISO 17025 by the American Association for Laboratory Accreditation (A2LA) under the American Association for Laboratory Accreditation Program (A2LA Cert. No. 3628.01) in EMC, Telecommunications, Radio and SAR testing.**

Accredited Laboratory

A2LA has accredited

MRT TECHNOLOGY (SUZHOU) CO., LTD.

Suzhou, Jiangsu, People's Republic of China

for technical competence in the field of

Electrical Testing

This laboratory is accredited in accordance with the recognized International Standard ISO/IEC 17025:2017 General requirements for the competence of testing and calibration laboratories. This accreditation demonstrates technical competence for a defined scope and the operation of a laboratory quality management system (refer to joint ISO-ILAC-IAF Communiqué dated April 2017).

Presented this 24th day of July 2018.

President and CEO
For the Accreditation Council
Certificate Number 3628.01
Valid to August 31, 2020

For the tests to which this accreditation applies, please refer to the laboratory's Electrical Scope of Accreditation.

1. INTRODUCTION

1.1. Scope

Measurement and determination of electromagnetic emissions (EMC) of radio frequency devices including intentional and/or unintentional radiators for compliance with the technical rules and regulations of the Federal Communications Commission and the Innovation, Science and Economic Development Canada and Certification and Engineering Bureau.

1.2. MRT Test Location

The map below shows the location of the MRT LABORATORY, its proximity to the Taihu Lake. These measurement tests were conducted at the MRT Technology (Suzhou) Co., Ltd. Facility located at D8 Building, No.2 Tian'edang Rd., Wuzhong Economic Development Zone, Suzhou, China. The measurement facility compliant with the test site requirements specified in ANSI C63.4-2014.

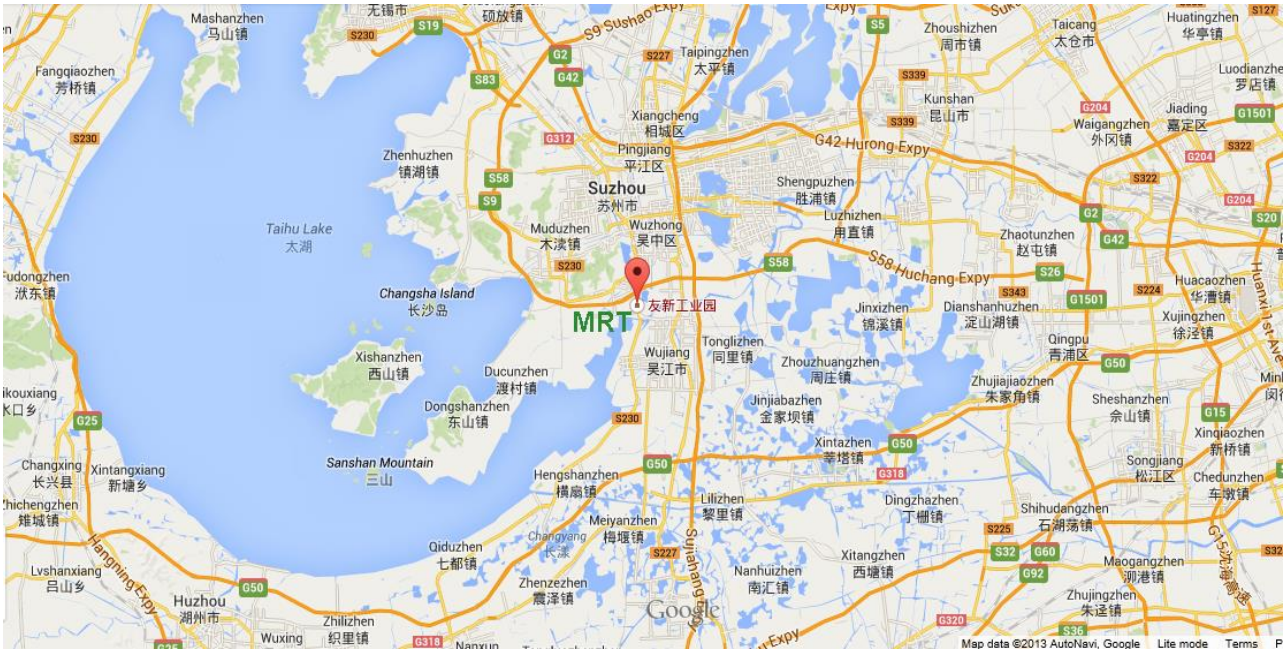

2. PRODUCT INFORMATION

2.1. Equipment Description

Product Name:	Platform remote control
Model No.:	PRCII
Brand Name:	Platin
Frequency Range:	433.92MHz
Type of modulation:	ASK
Antenna Type:	Spring Antenna
Antenna Gain:	2dBi
Power Supply:	By Dry Battery

2.2. EUT Setup and Test Mode

The EUT was operated at continuous transmitting mode that was for the purpose of the measurements. All testing shall be performed under maximum output power condition, and to measure its highest possible emissions level, more detailed description as follows:

Test Mode	Description	Remark
Mode 1	Transmitting	With Modulation

2.3. Test Configuration

The EUT was tested as described in this report is compliance with the requirements limits of FCC Rules Part 15.207,15.209, 15.215 and 15.231. ANSI C63.10-2013 was used to reference the appropriate EUT setup for radiated spurious emissions testing and AC line conducted testing.

2.4. EMI Suppression Device(s)/Modifications

No EMI suppression device(s) were added and/or no modifications were made during testing.

2.5. Labeling Requirements

Per 2.1074 & 15.19; Docket 95-19

The label shall be permanently affixed at a conspicuous location on the device; instruction manual or pamphlet supplied to the user and be readily visible to the purchaser at the time of purchase. However, when the device is so small wherein placement of the label with specified statement is not practical, only the FCC ID must be displayed on the device per Section 15.19(a)(5). Please see attachment for FCC ID label and label location.

3. DESCRIPTION OF TEST

3.1. Evaluation Procedure

The measurement procedures described in the American National Standard for Testing Unlicensed Wireless Devices (ANSI C63.10-2013), and the requirements provided in FCC 15.207, 15.209, 15.215 and 15.231 were performed in the report.

3.2. AC Line Conducted Emissions

The line-conducted facility is located inside an 8'x4'x4' shielded enclosure. A 1m x 2m wooden table 80cm high is placed 40cm away from the vertical wall and 80cm away from the sidewall of the shielded room. Two 10kHz-30MHz, 50Ω/50uH Line-Impedance Stabilization Networks (LISNs) are bonded to the shielded room floor. Power to the LISNs is filtered by external high-current high-insertion loss power line filters. These filters attenuate ambient signal noise from entering the measurement lines. These filters are also bonded to the shielded enclosure.

The EUT is powered from one LISN and the support equipment is powered from the second LISN. All interconnecting cables more than 1 meter were shortened to a 1 meter length by non-inductive bundling (serpentine fashion) and draped over the back edge of the test table. All cables were at least 40cm above the horizontal reference ground-plane. Power cables for support equipment were routed down to the second LISN while ensuring that that cables were not draped over the second LISN.

Sufficient time for the EUT, support equipment, and test equipment was allowed in order for them to warm up to their normal operating condition. The RF output of the LISN was connected to the receiver and exploratory measurements were made to determine the frequencies producing the maximum emission from the EUT. The receiver was scanned from 150 kHz to 30 MHz. The detector function was set to peak mode for exploratory measurements while the bandwidth of the analyzer was set to 9 kHz. The EUT, support equipment, and interconnecting cables were arranged and manipulated to maximize each emission. Each emission was also maximized by varying: power lines, the mode of operation or data exchange speed, or support equipment whichever determined the worst-case emission. Once the worst-case emissions have been identified, the one EUT cable configuration/arrangement and mode of operation that produced these emissions are used for final measurements on the same test site. The analyzer is set to CISPR quasi-peak and average detectors with a 9 kHz resolution bandwidth for final measurements.

An extension cord was used to connect to a single LISN which powered by EUT. The extension cord was calibrated with LISN, the impedance and insertion loss are compliance with the requirements as stated in ANSI C63.10-2013.

3.3. Radiated Emissions

The radiated test facilities consisted of an indoor 3 meters semi-anechoic chamber used for final measurements and exploratory measurements, when necessary. The measurement area is contained within the semi-anechoic chamber which is shielded from any ambient interference. For measurements above 1GHz absorbers are arranged on the floor between the turn table and the antenna mast in such a way so as to maximize the reduction of reflections. For measurements below 1GHz, the absorbers are removed. A MF Model 210SS turntable is used for radiated measurement. It is a continuously rotatable, remote controlled, metallic turntable and 2 meters (6.56 ft.) in diameter. The turn table is flush with the raised floor of the chamber in order to maintain its function as a ground plane. An 80cm high PVC support structure is placed on top of the turntable.

For all measurements, the spectrum was scanned through all EUT azimuths and from 1 to 4 meter receive antenna height using a broadband antenna from 30MHz up to the upper frequency shown in 15.33(b)(1) depending on the highest frequency generated or used in the device or on which the device operates or tunes. For frequencies above 1GHz, linearly polarized double ridge horn antennas were used. For frequencies below 30MHz, a calibrated loop antenna was used. When exploratory measurements were necessary, they were performed at 1 meter test distance inside the semi-anechoic chamber using broadband antennas, broadband amplifiers, and spectrum analyzers to determine the frequencies and modes producing the maximum emissions. Sufficient time for the EUT, support equipment, and test equipment was allowed in order for them to warm up to their normal operating condition. The test set-up for frequencies below 1GHz was placed on top of the 0.8 meter high, 1 x 1.5 meter table; and test set-up for frequencies 1-25GHz was placed on top of the 1.5 meter high, 1 x 1.5 meter table. The EUT, support equipment, and interconnecting cables were arranged and manipulated to maximize each emission. Appropriate precaution was taken to ensure that all emissions from the EUT were maximized and investigated. The system configuration, clock speed, mode of operation or video resolution, if applicable, turntable azimuth, and receive antenna height was noted for each frequency found.

Final measurements were made in the semi-anechoic chamber using calibrated, linearly polarized broadband and horn antennas. The test setup was configured to the setup that produced the worst-case emissions. The spectrum analyzer was set to investigate all frequencies required for testing to compare the highest radiated disturbances with respect to the specified limits. The turntable containing the EUT was rotated through 360 degrees and the height of the receive antenna was varied 1 to 4 meters and stopped at the azimuth and height producing the maximum emission. Each emission was maximized by changing the orientation of the EUT through three orthogonal planes and changing the polarity of the receive antenna, whichever produced the worst-case emissions.

According to 3dB Beam-Width of horn antenna, the horn antenna should be always directed to the EUT when rising height.

4. ANTENNA REQUIREMENTS

Excerpt from §15.203 of the FCC Rules/Regulations:

"An intentional radiator antenna shall be designed to ensure that no antenna other than that furnished by the responsible party can be used with the device. The use of a permanently attached antenna or of an antenna that uses a unique coupling to the intentional radiator shall be considered sufficient to comply with the provisions of this section."

- The antenna of the unit is permanently attached.
- There are no provisions for connection to an external antenna.

Conclusion:

The unit complies with the requirement of §15.203.

5. TEST EQUIPMENT CALIBRATION DATE

Conducted Emission - SR2

Instrument	Manufacturer	Type No.	Asset No.	Cali. Interval	Cali. Due Date
EMI Test Receiver	R&S	ESR3	MRTSUE06185	1 year	2020/04/15
Two-Line V-Network	R&S	ENV 216	MRTSUE06002	1 year	2020/06/13
Two-Line V-Network	R&S	ENV 216	MRTSUE06003	1 year	2020/06/13
Thermohygrometer	Testo	608-H1	MRTSUE06404	1 year	2020/08/08
Shielding Room	MIX-BEP	Chamber-SR2	MRTSUE06215	N/A	N/A

Radiated Emission - AC1

Instrument	Manufacturer	Type No.	Asset No.	Cali. Interval	Cali. Due Date
EMI Test Receiver	R&S	ESR7	MRTSUE06001	1 year	2020/08/01
PXA Signal Analyzer	Keysight	9030B	MRTSUE06395	1 year	2020/09/03
Loop Antenna	Schwarzbeck	FMZB 1519	MRTSUE06025	1 year	2020/11/08
Bilog Period Antenna	Schwarzbeck	VULB 9168	MRTSUE06172	1 year	2020/03/31
Broad Band Horn Antenna	Schwarzbeck	BBHA 9120D	MRTSUE06023	1 year	2020/10/18
Broad Band Horn Antenna	Schwarzbeck	BBHA 9170	MRTSUE06024	1 year	2020/12/29
Microwave System Amplifier	Agilent	83017A	MRTSUE06076	1 year	2020/11/15
Preamplifier	Schwarzbeck	BBV 9721	MRTSUE06121	1 year	2020/06/11
Thermohygrometer	Testo	608-H1	MRTSUE06403	1 year	2020/08/08
Anechoic Chamber	TDK	Chamber-AC1	MRTSUE06212	1 year	2020/04/30

Radiated Emission - AC2

Instrument	Manufacturer	Type No.	Asset No.	Cali. Interval	Cali. Due Date
Spectrum Analyzer	Keysight	N9038A	MRTSUE06125	1 year	2020/08/01
Loop Antenna	Schwarzbeck	FMZB 1519	MRTSUE06025	1 year	2020/11/08
Bilog Period Antenna	Schwarzbeck	VULB 9162	MRTSUE06022	1 year	2020/10/13
Horn Antenna	Schwarzbeck	BBHA9120D	MRTSUE06171	1 year	2020/10/27
Broad Band Horn Antenna	Schwarzbeck	BBHA 9170	MRTSUE06024	1 year	2020/12/29
Broadband Coaxial Preamplifier	Schwarzbeck	BBV 9718	MRTSUE06176	1 year	2020/11/15
Preamplifier	Schwarzbeck	BBV 9721	MRTSUE06121	1 year	2020/06/11
Temperature/Humidity Meter	Minggao	ETH529	MRTSUE06170	1 year	2020/12/15
Anechoic Chamber	RIKEN	Chamber-AC2	MRTSUE06213	1 year	2020/04/30

Software	Version	Function
EMI Software	V3	EMI Test Software

6. MEASUREMENT UNCERTAINTY

Where relevant, the following test uncertainty levels have been estimated for tests performed on the EUT as specified in CISPR 16-4-2. This uncertainty represents an expanded uncertainty expressed at approximately the 95% confidence level using a coverage factor of k = 2.

AC Conducted Emission Measurement - SR2
Measuring Uncertainty for a Level of Confidence of 95% (U=2Uc(y)): 9kHz~150kHz: 3.84dB 150kHz~30MHz: 3.46dB
Radiated Emission Measurement - AC1
Measuring Uncertainty for a Level of Confidence of 95% (U=2Uc(y)): Horizontal: 30MHz~300MHz: 4.07dB 300MHz~1GHz: 3.63dB 1GHz~6GHz: 4.16dB Vertical: 30MHz~300MHz: 4.18dB 300MHz~1GHz: 3.60dB 1GHz~6GHz: 4.76dB
Radiated Emission Measurement - AC2
Measuring Uncertainty for a Level of Confidence of 95% (U=2Uc(y)): Horizontal: 30MHz~300MHz: 3.75dB 300MHz~1GHz: 3.53dB 1GHz~6GHz: 4.28dB Vertical: 30MHz~300MHz: 3.86dB 300MHz~1GHz: 3.53dB 1GHz~6GHz: 4.33dB

7. TEST RESULT

7.1. Summary

FCC Part Section(s)	Test Description	Test Condition	Test Result	Reference
15.207	AC Conducted Emissions 150kHz - 30MHz	Line Conducted	N/A	Section 7.2
15.205, 15.231(b)	Radiated Spurious Emissions	Radiated	Pass	Section 7.3
15.231(c)	20dB & 99% Bandwidth		Pass	Section 7.4
15.231(a)(1)	Release Time		Pass	Section 7.5
15.231(b)	Duty Cycle		Pass	Section 7.6

Notes:

1) All modes of operation and data rates were investigated. The test results shown in the following sections represent the worst-case emissions.
2) The radiation measurements are performed in X, Y, Z axis positioning. Only the worst case is shown in the report.
3) “N/A” means that the test item is not applicable, and the details refer to relevant section.

7.2. Conducted Emission

7.2.1.Test Limit

FCC Part 15.207 Limit		
Frequency (MHz)	QP (dBuV)	AV (dBuV)
0.15 ~ 0.50	66 ~ 56	56 ~ 46
0.50 ~ 5.0	56	46
5.0 ~ 30	60	50
Note 1: The lower limit shall apply at the transition frequencies. Note 2: The limit decreases linearly with the logarithm of the frequency in the range 0.15MHz to 0.5MHz.		

7.2.2.Test Setup

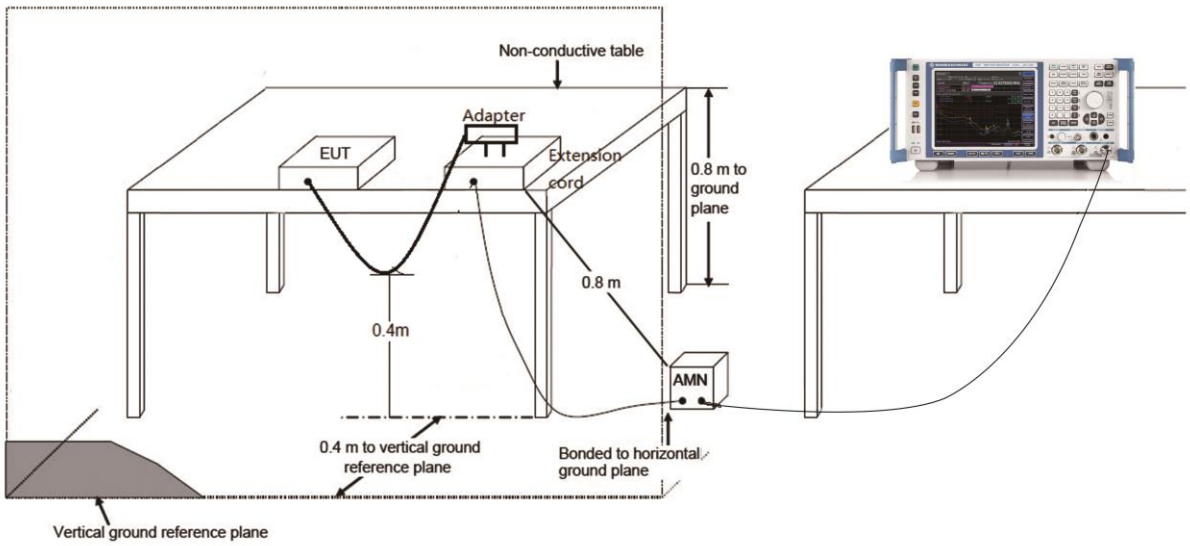

7.2.3.Test Result

The EUT is powered by internal battery, so this requirement does not apply.

7.3. Radiated Emissions

7.3.1.Test Limit

According to §15.231(b), the field strength of emissions from intentional radiators operated under this section shall not exceed the following:

FCC Part 15.231(b) Limit		
Fundamental Frequency (MHz)	Field strength of fundamental (microvolts/meter)	Field strength of spurious emission (microvolts/meter)
40.66 - 40.70	2250	225
70 - 130	1250	125
130 - 174	1250 to 3750	125 to 375
174 - 260	3750	375
260 - 470	3750 to 12500	375 to 1250
Above 470	12500	1250

The limits on the field strength of the spurious emissions in the above table are based on the fundamental frequency of the intentional radiator. Spurious emissions shall be attenuated to the average (or, alternatively, CISPR quasi-peak) limits shown in this table or to the general limits shown in §15.209, whichever limit permits a higher field strength.

The emission limit in this paragraph is based on measurement instrumentation employing an average detector. The provisions in §15.35 for limiting peak emissions apply. Spurious Radiated Emissions measurements start below or at the lowest crystal frequency.

Compliance with the provisions of §15.205 shall be demonstrated using the measurement instrumentation specified in that section.

For 15.205 requirement:

Radiated emissions which fall in the restricted bands, as defined in Section 15.205(a) of FCC part 15, must also comply with the radiated emission limits specified in Section 15.209(a).

Frequency (MHz)	Frequency (MHz)	Frequency (MHz)	Frequency (GHz)
0.090 - 0.110	16.42 - 16.423	399.9 - 410	4.5 - 5.15
[1]0.495 - 0.505	16.69475 - 16.69525	608 - 614	5.35 - 5.46
2.1735 - 2.1905	16.80425 - 16.80475	960 - 1240	7.25 - 7.75
4.125 - 4.128	25.5 - 25.67	1300 - 1427	8.025 - 8.5
4.17725 - 4.17775	37.5 - 38.25	1435 - 1626.5	9.0 - 9.2
4.20725 - 4.20775	73 - 74.6	1645.5 - 1646.5	9.3 - 9.5
6.215 - 6.218	74.8 - 75.2	1660 - 1710	10.6 - 12.7
6.26775 - 6.26825	108 - 121.94	1718.8 - 1722.2	13.25 - 13.4
6.31175 - 6.31225	123 - 138	2200 - 2300	14.47 - 14.5
8.291 - 8.294	149.9 - 150.05	2310 - 2390	15.35 - 16.2
8.362 - 8.366	156.52475 - 156.52525	2483.5 - 2500	17.7 - 21.4
8.37625 - 8.38675	156.7 - 156.9	2690 - 2900	22.01 - 23.12
8.41425 - 8.41475	162.0125 - 167.17	3260 - 3267	23.6 - 24.0
12.29 - 12.293	167.72 - 173.2	3332 - 3339	31.2 - 31.8
12.51975 - 12.52025	240 - 285	3345.8 - 3358	36.43 - 36.5
12.57675 - 12.57725	322 - 335.4	3600 - 4400	([2])
13.36 - 13.41	--	--	--

All out of band emissions appearing in a restricted band as specified in Section 15.205 of the Title 47 CFR must not exceed the limits shown in Table per Section 15.209.

FCC Part 15.209 Limit		
Frequency (MHz)	Field Strength (μV/m)	Measured Distance (m)
0.009 - 0.490	2400/F (kHz)	300
0.490 - 1.705	24000/F (kHz)	30
1.705 – 30.0	30	30
30 - 88	100	3
88 - 216	150	3
216 - 960	200	3
Above 960	500	3

7.3.2.Test Setup

Below 1GHz Test Setup:

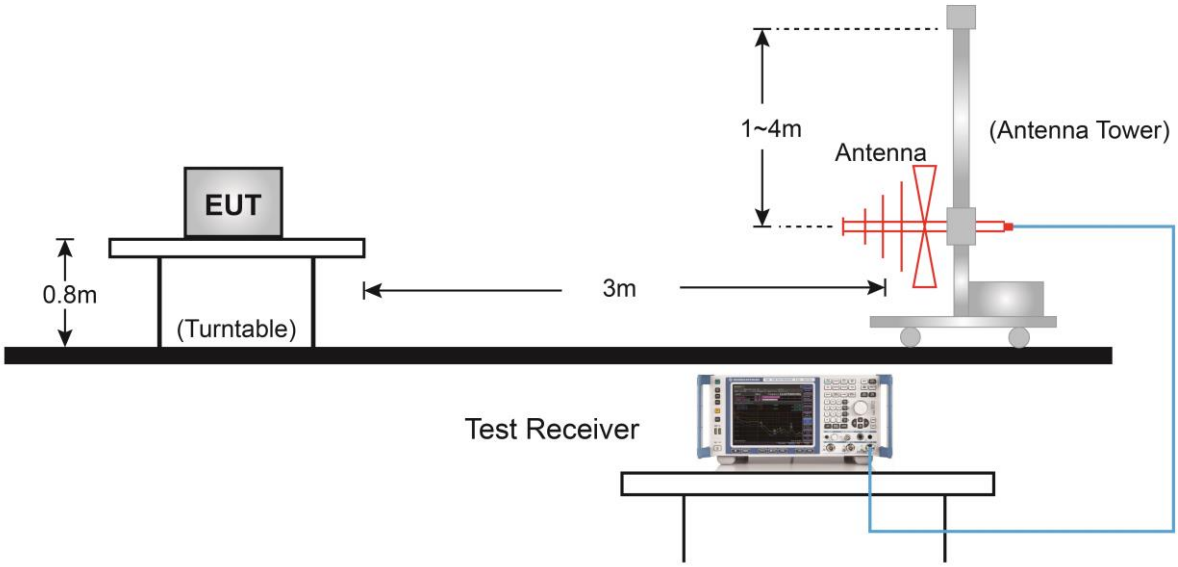

Above 1GHz Test Setup:

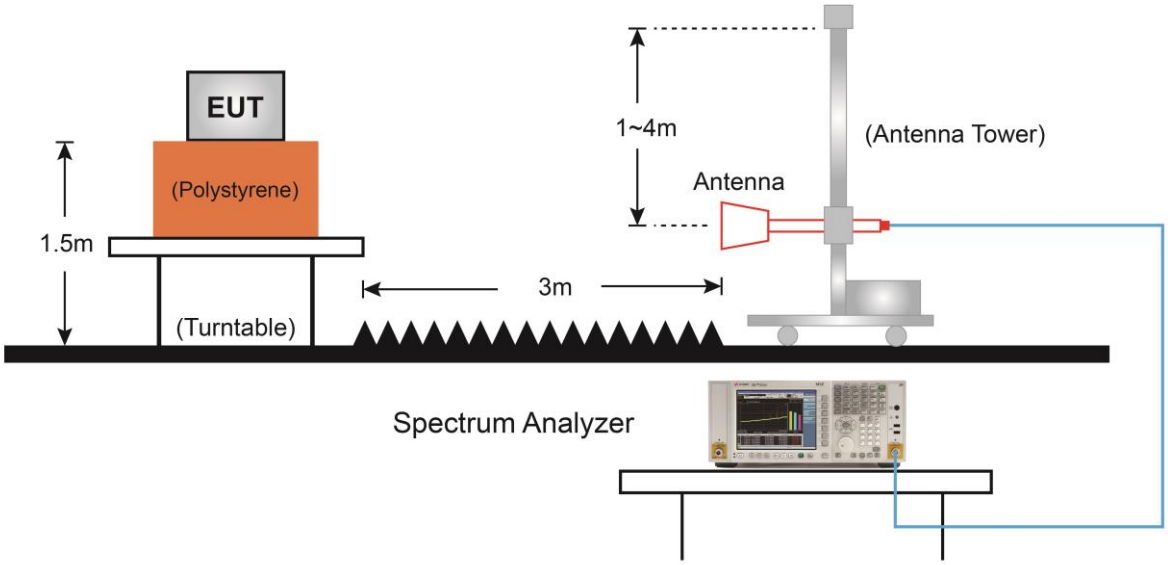

7.3.3.Test Results

Site: AC1	Time: 2020/03/16 - 11:47
Limit: FCC_Part15.231(b)_RE(3m)	Engineer: Yeto Yin
Probe: AC1_VULB 9168 _20-2000MHz	Polarity: Horizontal
EUT: Platform remote control	Power: By Battery
Test Mode: Transmit at Channel 433.92 MHz	

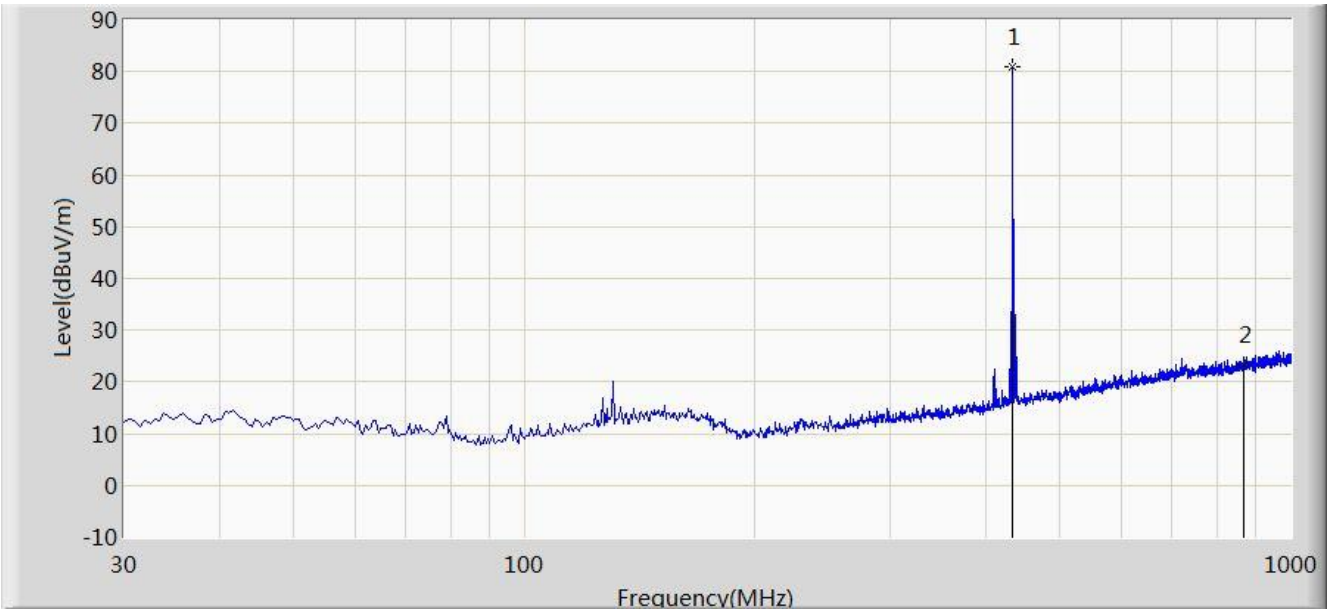

No	Frequency (MHz)	Reading Level (dBuV)	Factor (dB)	Duty Cycle Factor (dB)	Measure Level (dBuV/m)	Limit (dBuV/m)	Margin (dB)	Type
1	434.005	63.489	17.455	N/A	80.944	100.825	-19.881	PK
	434.005	63.489	17.455	-24.44	56.554	80.825	-24.271	AV
2	867.840	-0.504	23.924	N/A	23.42	80.825	-57.405	PK
	867.840	-0.504	23.924	-24.44	-1.02	60.825	-61.845	AV

Note 1: Testing is carried out with frequency rang 9 kHz to the tenth harmonics. There is the ambient noise within frequency range 9 kHz ~ 30 MHz, the permissible value is not show in the report.

Note 2: The fundamental frequency is 433.92MHz, so the fundamental and spurious emissions radiated limit base on the operating frequency 433.92MHz.

Note 3: Peak Measure Level (dBµV/m) = Reading Level (dBµV) + Factor (dB).

AV Measure Level = Peak Measure Level + Duty Cycle Factor.

Factor (dB) = Cable Loss (dB) + Antenna Factor (dB/m).

Note 4: For 433.92 MHz:

Average Limit (dBµV/m) = 20*log {(41.67 x 433.92 - 7083) / 10^6} +120 = 80.825 (dBµV/m).

Peak Limit (dBµV/m) = Average Limit (dBµV/m) + 20 = 100.825 (dBµV/m).

Site: AC1	Time: 2020/03/16 - 11:59
Limit: FCC_Part15.231(b)_RE(3m)	Engineer: Yeto Yin
Probe: AC1_VULB 9168 _20-2000MHz	Polarity: Vertical
EUT: Platform remote control	Power: By Battery
Test Mode: Transmit at Channel 433.92 MHz	

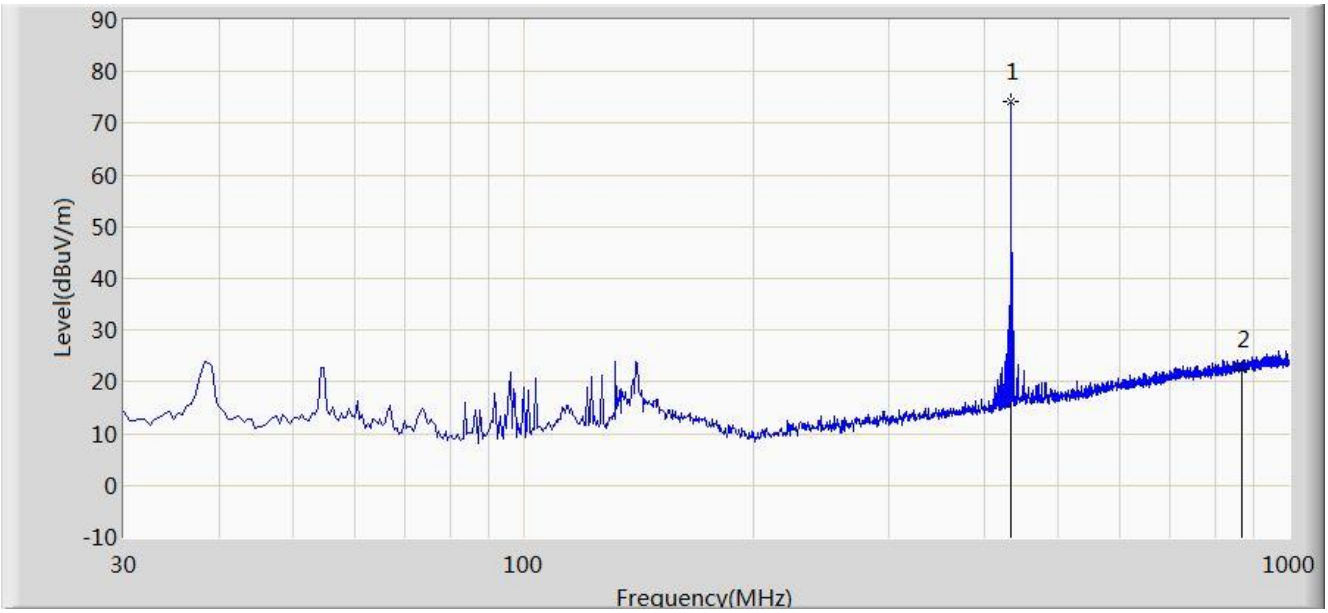

No	Frequency (MHz)	Reading Level (dBuV)	Factor (dB)	Duty Cycle Factor (dB)	Measure Level (dBuV/m)	Limit (dBuV/m)	Margin (dB)	Type
1	434.005	56.674	17.455	N/A	74.129	100.825	-26.696	PK
	434.005	56.674	17.455	-24.44	49.689	80.825	-31.136	AV
2	867.840	-1.379	23.924	N/A	22.545	80.825	-58.280	PK
	867.840	-1.379	23.924	-24.44	-1.895	60.825	-62.720	AV

Note 1: Testing is carried out with frequency rang 9 kHz to the tenth harmonics. There is the ambient noise within frequency range 9 kHz ~ 30 MHz, the permissible value is not show in the report.

Note 2: The fundamental frequency is 433.92MHz, so the fundamental and spurious emissions radiated limit base on the operating frequency 433.92MHz.

Note 3: Peak Measure Level (dBµV/m) = Reading Level (dBµV) + Factor (dB).

AV Measure Level = Peak Measure Level + Duty Cycle Factor.

Factor (dB) = Cable Loss (dB) + Antenna Factor (dB/m).

Note 4: For 433.92 MHz:

Average Limit (dBµV/m) = 20*log {(41.67 x 433.92 - 7083) / 10^6} +120 = 80.825 (dBµV/m).

Peak Limit (dBµV/m) = Average Limit (dBµV/m) + 20 = 100.825 (dBµV/m).

Site: AC1	Time: 2020/03/24 - 18:58
Limit: FCC_Part15.231(b)_RE(3m)	Engineer: Yeto Yin
Probe: AC1_BBHA9120D_1-18GHz	Polarity: Horizontal
EUT: Platform remote control	Power: By Battery
Test Mode: Transmit at Channel 433.92 MHz	

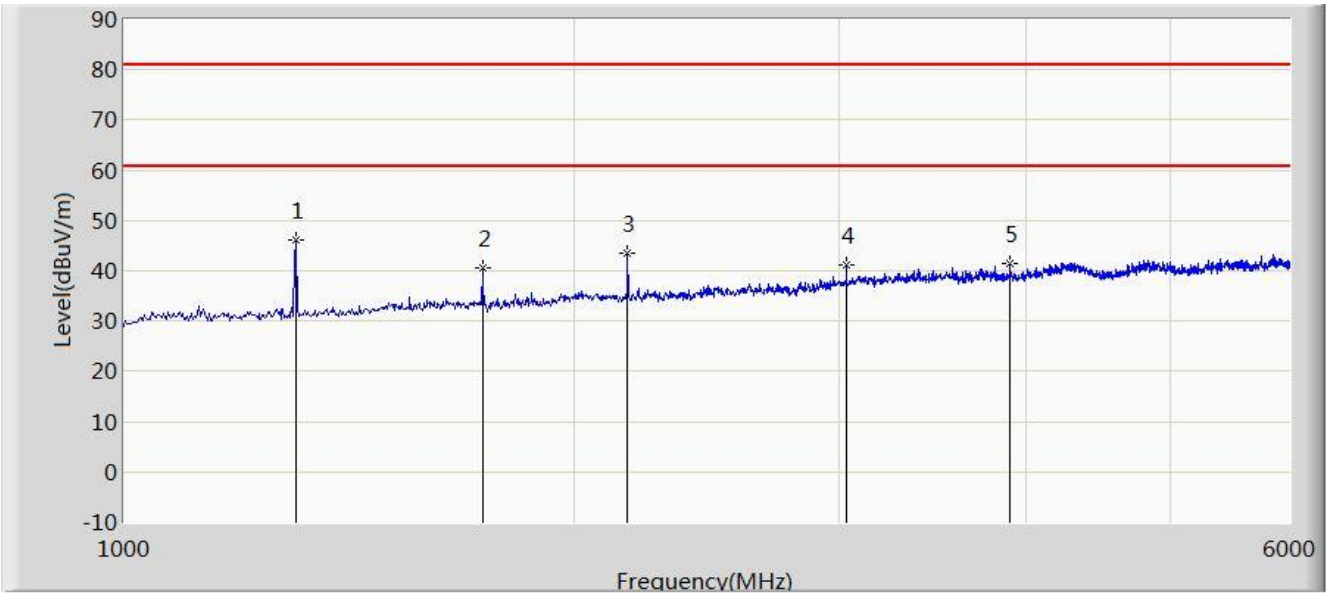

No	Frequency (MHz)	Reading Level (dBuV)	Factor (dB)	Duty Cycle Factor (dB)	Measure Level (dBuV/m)	Limit (dBuV/m)	Margin (dB)	Type
1	1302.5	50.575	-4.496	N/A	46.079	74.000	-27.921	PK
2	1735.0	45.049	-4.479	N/A	40.570	80.825	-40.255	PK
3	2170.0	44.880	-1.370	N/A	43.510	80.825	-37.315	PK
4	3037.5	40.203	1.006	N/A	41.209	80.825	-39.616	PK
5	3905.0	38.323	3.077	N/A	41.400	74.000	-32.600	PK

Note: Peak Measure Level (dBμV/m) = Reading Level (dBμV) + Factor (dB).

Factor (dB) = Cable Loss (dB) + Antenna Factor (dB/m) - Pre_Amplifier Gain (dB).

Average measurement was not performed when the peak level lower than average limit.

Site: AC1	Time: 2020/03/24 - 19:13
Limit: FCC_Part15.231(b)_RE(3m)	Engineer: Yeto Yin
Probe: AC1_BBHA9120D_1-18GHz	Polarity: Vertical
EUT: Platform remote control	Power: By Battery
Test Mode: Transmit at Channel 433.92 MHz	

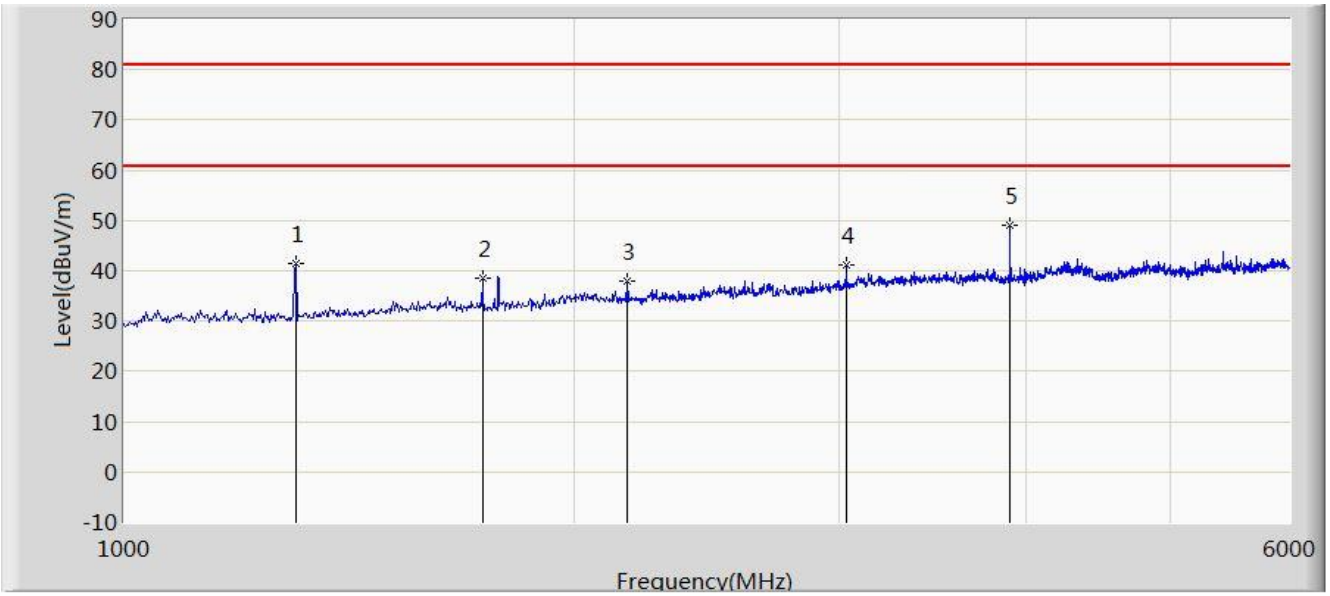

No	Frequency (MHz)	Reading Level (dBuV)	Factor (dB)	Duty Cycle Factor (dB)	Measure Level (dBuV/m)	Limit (dBuV/m)	Margin (dB)	Type
1	1302.5	45.973	-4.496	N/A	41.477	74.000	-32.523	PK
2	1735.0	43.011	-4.479	N/A	38.532	80.825	-42.293	PK
3	2170.0	39.456	-1.370	N/A	38.086	80.825	-42.739	PK
4	3037.5	40.254	1.006	N/A	41.260	80.825	-39.565	PK
5	3905.0	46.116	3.077	N/A	49.193	74.000	-24.807	PK

Note: Peak Measure Level (dBμV/m) = Reading Level (dBμV) + Factor (dB).

Factor (dB) = Cable Loss (dB) + Antenna Factor (dB/m) - Pre_Amplifier Gain (dB).

Average measurement was not performed when the peak level lower than average limit.

7.4. 20dB & 99% Bandwidth

7.4.1. Test Limit

According to FCC Part 15.231(c), the bandwidth of the emission shall be no wider than 0.25% of the center frequency for devices operating above 70MHz and below 900MHz. Bandwidth is determined at the points 20 dB down from the modulated carrier.

7.4.2.Test Procedure used

ANSI C63.10 Clause 6.9.2

7.4.3.Test Setting

1. Set the spectrum span range to two times and five times the OBW
2. Set RBW = 1% ~ 5% of the OBW
3. VBW ≥ 3 × RBW
4. Detector = Peak
5. Trace mode = max hold
6. Sweep = auto couple

7.4.4. Test Setup

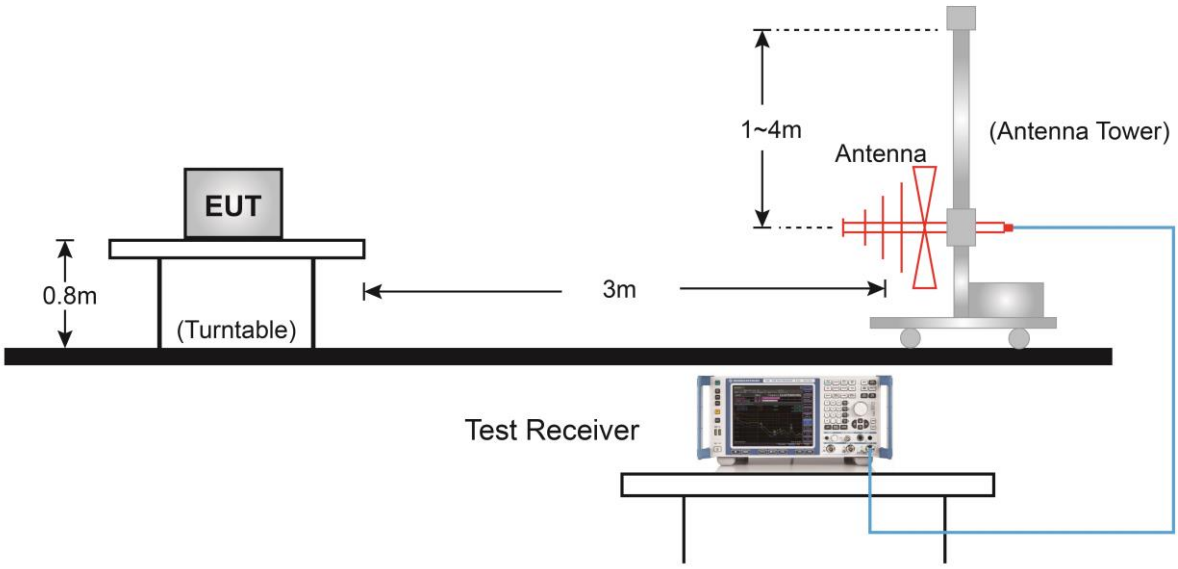

7.4.5. Test Result

Product	Platform remote control	Temperature	24˚C
Test Engineer	Yeto Yin	Relative Humidity	59%
Test Site	AC1	Test Date	2020/03/16

99% Bandwidth (kHz)	20dB Bandwidth (kHz)	Limit (kHz)	Result
100.0	103.0	≤ 1084.8	Pass

Note: For 433.92MHz: Limit = Fundamental Frequency * 0.25% = 433.92 MHz * 0.25% = 1084.8 kHz

99% Bandwidth

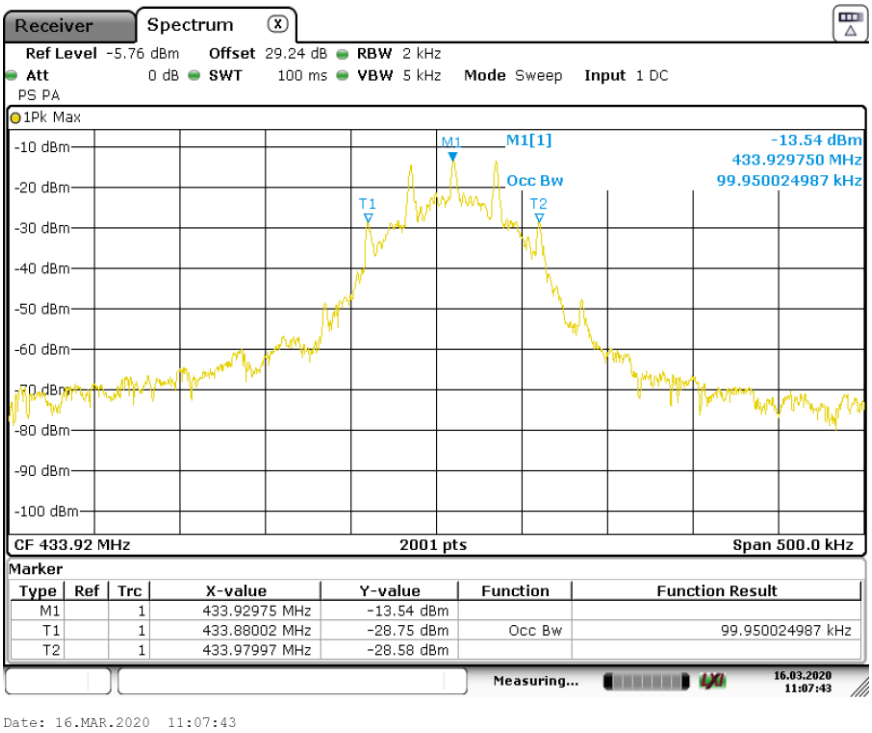

20dB Bandwidth

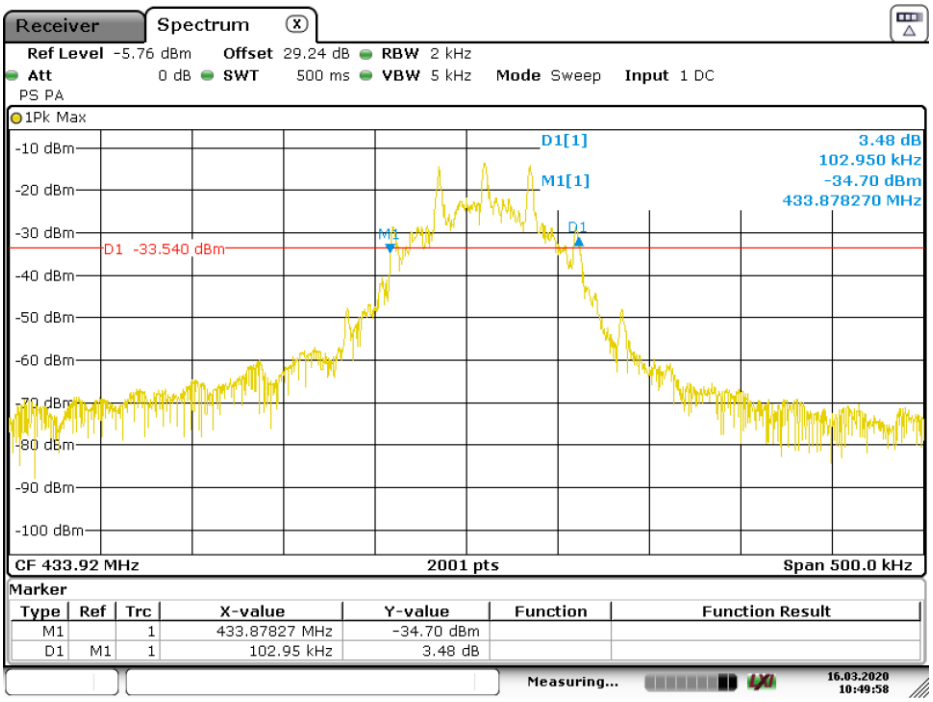

7.5. Release Time

7.5.1. Test Limit

A manually operated transmitter shall employ a switch that will automatically deactivate the transmitter within not more than 5 seconds of being released.

7.5.2. Test Procedure

With the EUT's antenna attached, the EUT's output signal was received by the test antenna, which was connected to the spectrum analyzer. Set the center frequency to 433.92MHz, than set the spectrum analyzer to Zero Span for the release time reading. During the testing, the switch was released then the EUT automatically deactivated.

7.5.3. Test Setup

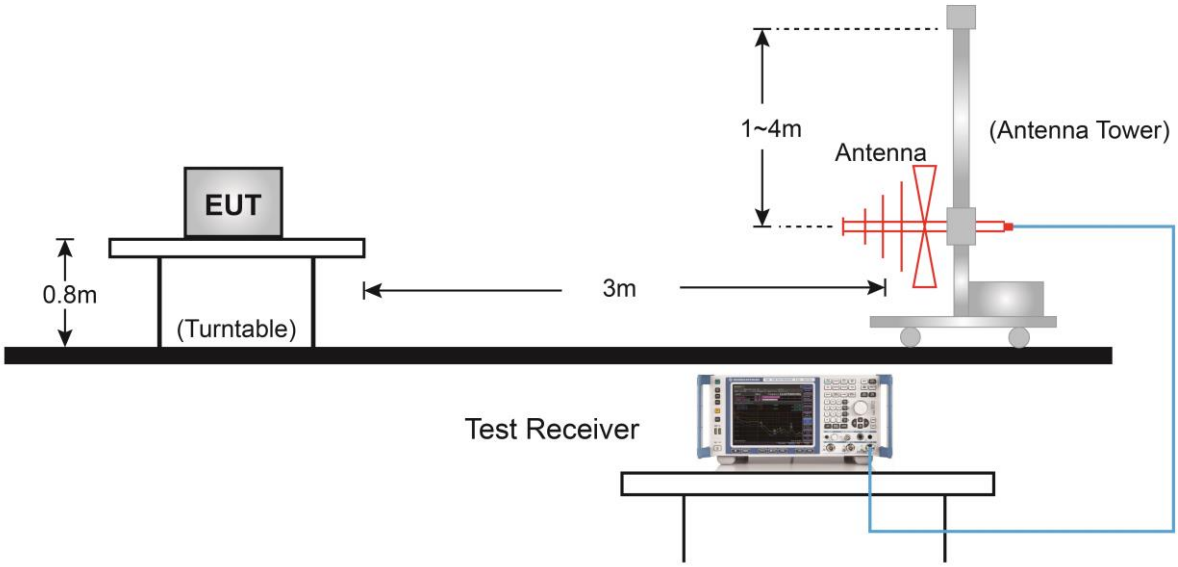

7.5.4. Test Result

Product	Platform remote control	Temperature	24˚C
Test Engineer	Yeto Yin	Relative Humidity	59%
Test Site	AC1	Test Date	2020/04/10

Item	Measured Value	Limit	Result
Release Time	30 ms	≤ 5 s	Pass

Note: Time On = 6 ms *5 = 30 ms.

Release Time

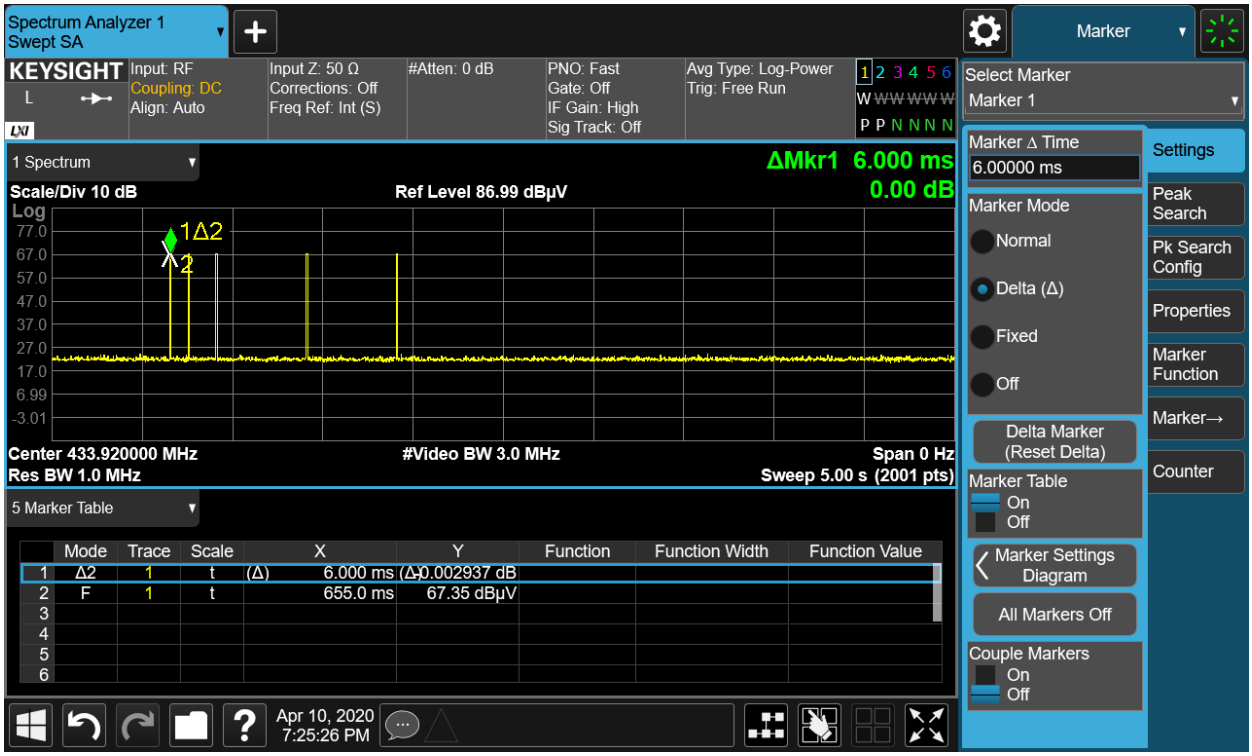

7.6. Duty Cycle

7.6.1. Test Limit

N/A

7.6.2. Test Procedure

With the EUT's antenna attached, the EUT's output signal was received by the test antenna, which was connected to the spectrum analyzer. Set the center frequency to 433.92MHz, than set the spectrum analyzer to Zero Span for the release time reading. During the testing, the switch was released then the EUT automatically deactivated.

According to FCC Part 15.231(b) and 15.35(b), for pulse operation transmitter, the averaging pulsed emissions are calculated by peak value of measured emission plus duty cycle factor.

7.6.3. Test Setup

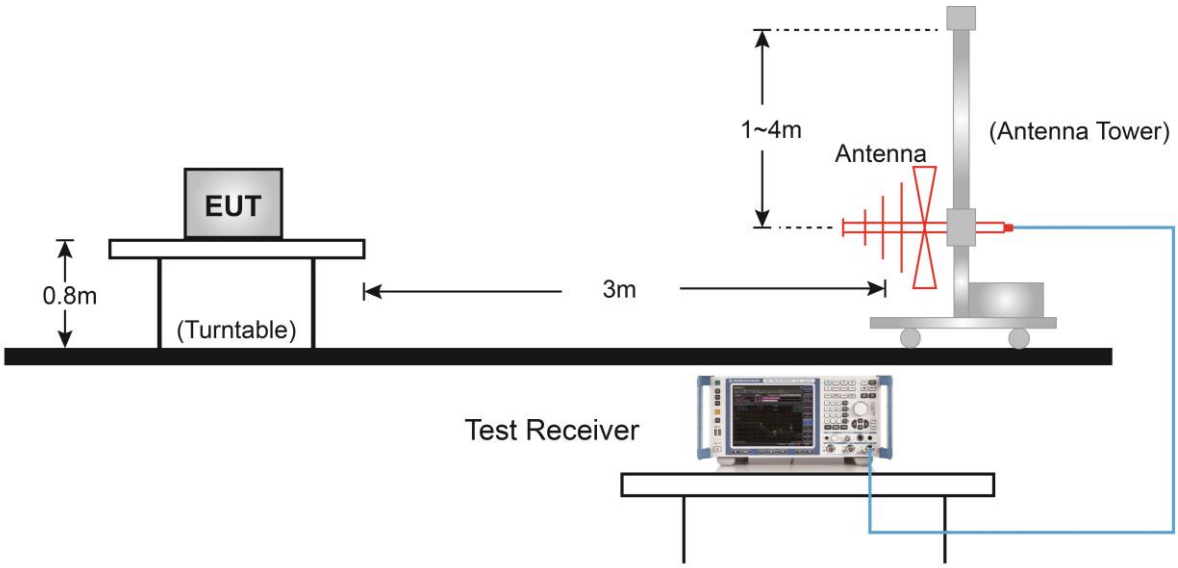

7.6.4.Test Setup

Product	Platform remote control	Temperature	24˚C
Test Engineer	Yeto Yin	Relative Humidity	59%
Test Site	AC1	Test Date	2020/03/24

Time On (ms)	One Period (ms)	Duty Cycle (%)	Duty Cycle Factor (dB)
6.00	100	6.00	-24.44

Note: Duty Cycle Factor = 20*Log (Duty Cycle)

Time On = 6.00ms

Duty Cycle
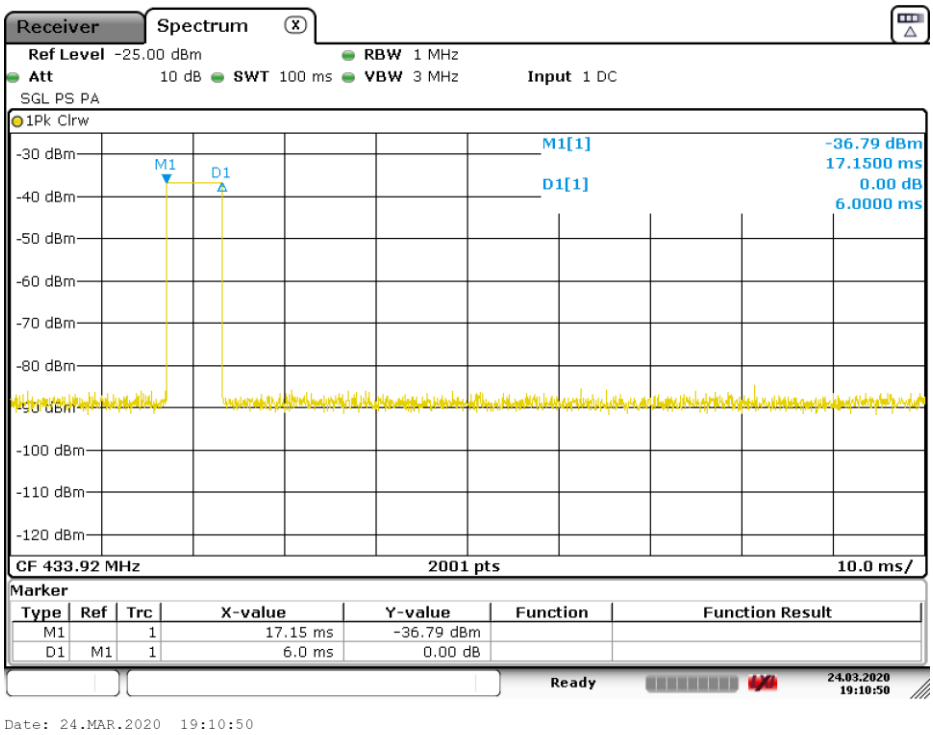

8. CONCLUSION

The data collected relate only the item(s) tested and show that the device is compliance with FCC Rules.

The End

Appendix A - Test Setup Photograph

Refer to “2001RSU022-U2T” file.

Appendix B - EUT Photograph

Refer to “2001RSU022-U2E” file.