X501 Module

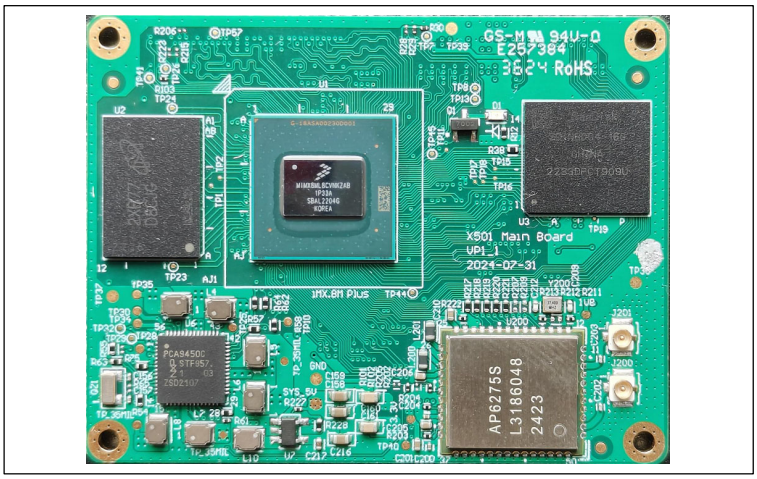

Version:	Initiated by:	Date:	Reviewed by:	Date:
V1.2	Bruce	2024/7/31		

Approval List

Function	Name	Date	Signature
Group Leader			
R&D Manager			
Project Manager			
Program Manager			
SCM Manager			
QA Manager			

Document History

Date	Version	Author	Change
2023/5/13	V1.0	Bruce	Initial document
2023/5/24	V1.1	Bruce	Change LPDDR4 from 2GB to 4GB
2023/7/31	V1.2	Bruce	Add a dedicated DCDC to power WIFI module

Confidentiality Notice
The information contained in this document is confidential information property of HANSONG(NANJING)TECHNOLOGYLTD. No part of this document may be used or reproduced without written permission.
Copyright Notice
All rights reserved. No part of this work covered by the owner's copyright may be reproduced or copied in any form or by any means (graphic, electronic or mechanical, including photocopying, recording, taping or information retrieval systems) without written permission.
Document Version Management Notice
Updates of this document will be done without notice. The latest document version is available on request.

Definitions, Acronyms, Symbols and Abbreviations

Abbreviation	Comment		Abbreviation	Comment
CRS	Customer requirements Specifications		dB	Decibel: Unit of Sound Level
EMC	Electro Magnetic Compatibility		Hz	Hertz: Unit of Frequency
LED	Light Emitting Diode		BSMI	Bureau of Standards, Metrology and Inspection
N/A	Not Applicable		SASO	Saudi Arabian Standards Organisation
Oct	octave		NOM	Normas Oficiales Mexicanas
TA	Type Approval		PC	Polycarbonate
TBC	To be confirmed		ABS	Acrylonitrile Butadiene Styrene
TBD	To be defined		POM	Polyoxymethylene
ID	Industrial Design		CE	Conformité Européenne
DV or DVT	Design Verification Test		FCC	Federal Communications Commission
DM or DMT	Design Maturity Test		ODM	Original Design Manufacturer
FM	Frequency Modulation		PSS&L	Product Safety, Security & Liability
RMS	Root Mean Square		50N	50 Newton
PHC	Power Handling Capacity		TR	Trial Run
RH	Relative Humidity		TCMF	Test Case Management File
ESD	Electro Static Discharge		PMPO	Peak Music Power Output
S/N	Signal to Noise Ratio		IEC	Intern. Electrotechnical Commission
THD	Total Harmonic Distortion		Fo	Resonance Frequency
EUT	Equipment Under Test		TPU	Thermo Plastic Urethane
SoC	Statement of Conformance		SPL	Sound Pressure Level
FR	Flame Retardants		HDMI	High-Definition Multimedia Interface
OEM	Original Equipment Manufact.		HDCP	High-bandwidth Digital Content Protect.
&	Important remark		CEC	Consumer Electronics Control
			FRS	Functional Requirement Specification

Table 1 Definitions

Table of Content

1 General Product Description 5
2 ID Drawings (Dimensions) 6
2.1 Module Topside 6
2.2 Module Bottom Side 6
3 System Block Diagram 7
4 Typical Application Description (Usage Scenarios) 8
5 Explanation of part number 9
6 Board configuration 10
7 CPU feature 10
8 IO CONFIGURE 11
8.1 General interface 11
8.2 Interface communication rate supported 12
8.3 IO Schmatic 13
8.4 Connector type 16
8.5 IO MAP 17
9 Board interfaces details 22
9.1 Power supply 22
9.2 Reset and control 22
9.3 Boot selector 23
9.4 Boot mode setting 23
9.5 UART 25
9.6 IIC 25
9.7 Ethernet 26
9.8 USB3.0 29
9.9 SDIO 29
9.10 Digital Audio In- and Outputs 30
9.11 PDM 30
9.12 MIPI 31
9.13 LVDS 31
9.14 HDMI 31
10 Wireless – Wi-Fi /BT module 32
10.1 2.4GHz RF Specification 34
10.2 5GHz RF Specification 37
10.3 5GHz Channel table 51
10.4 Bluetooth Specification 52
11 Software profile 53
11.1 Network setup 53
11.2 APP 53
12 Cloud skills 55
13 Safety and Approbations 55
14 Certification 56
15 Environmental Requirements 56
16 Storage 56
17 Software System Structure 57
18 Appendixes 58

INTRODUCTION

1 General Product Description

The X501 module features the core functionality of a network audio streaming client with a quad-core 1.6GHz ARM Cortex-A53 CPU and a Cortex-M7 700MHz microcontroller with higher performance, as well as more flexible and economical control interface.
X501 has excellent performance in the field of audio and video applications, it can provide more comprehensive digital signal processing and communication functions required by next generation network products.

Typical applications include:

- **Consumer Electronics**
  - ✧ **Voice and Video Assistant products**
  - ✧ **Wireless Speakers, AVR,Sound Bars…**
  - ✧ **High-End audio products**
  - ✧ **HDMI applications**
- **Building Technology**
  - ✧ **Home theatre**
  - ✧ **Video/Voice conference system**
- **Institutional Audio/Video**
  - ✧ **Audio distribution in Hotels, Supermarkets…**
  - ✧ **CI matrix amp products Professional Audio**
- **Gateways between internet and proprietary interfaces**

2 ID Drawings (Dimensions)

2.1 Module Topside

61mm*47mm*4.45mm(L * W * H)

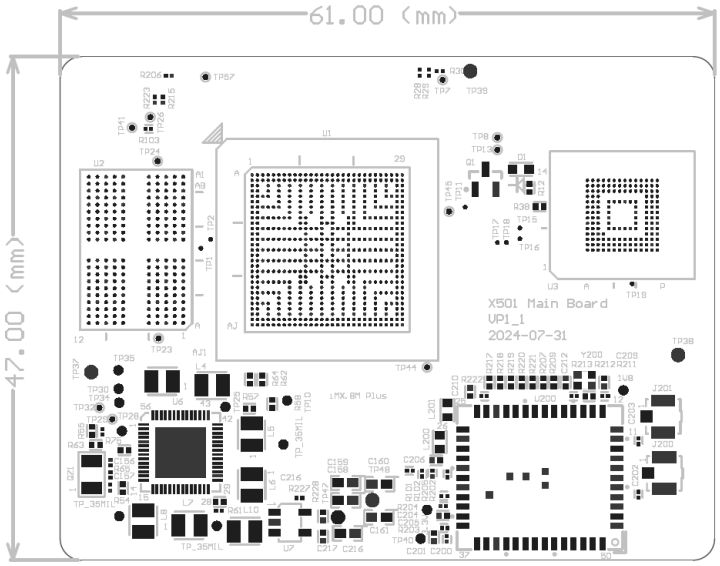

2.2 Module Bottom Side

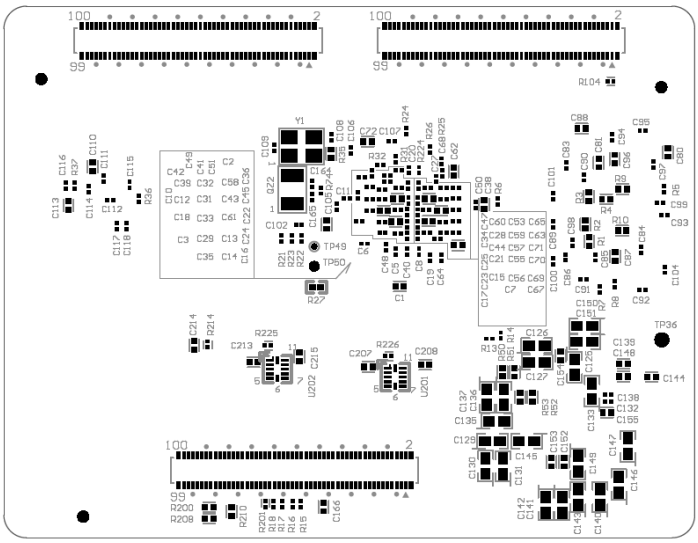

3 System Block Diagram

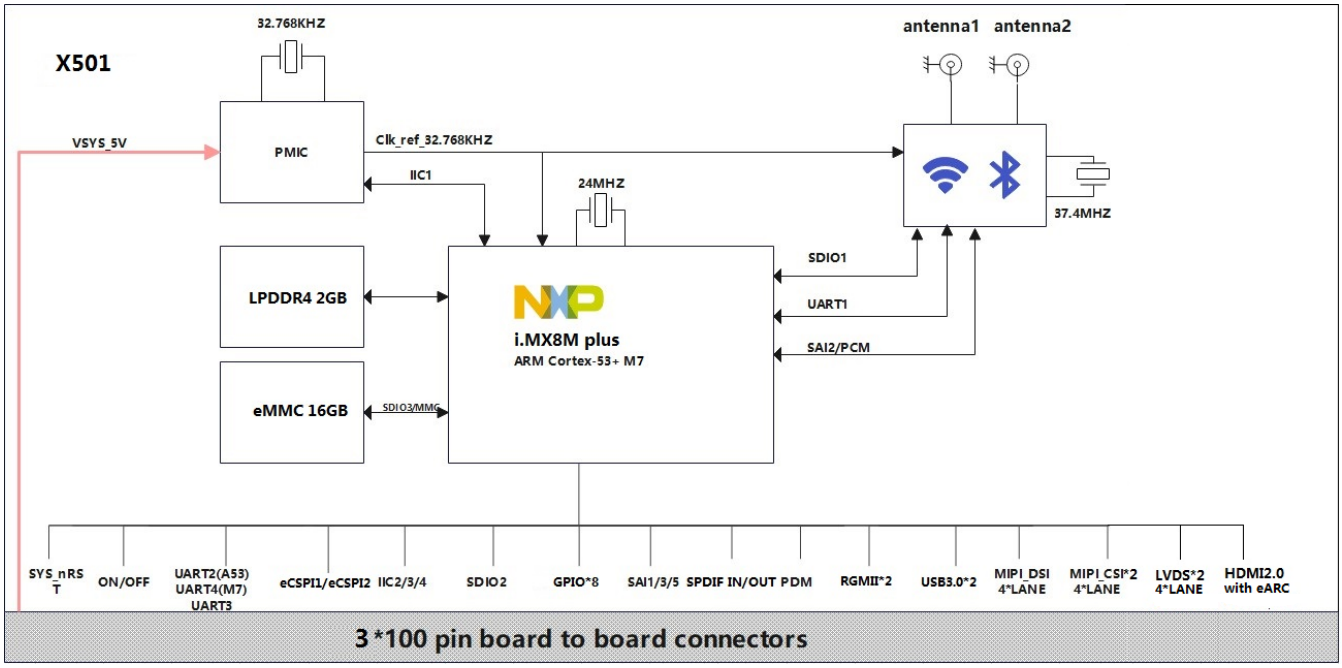

4 Typical Application Description (Usage Scenarios)

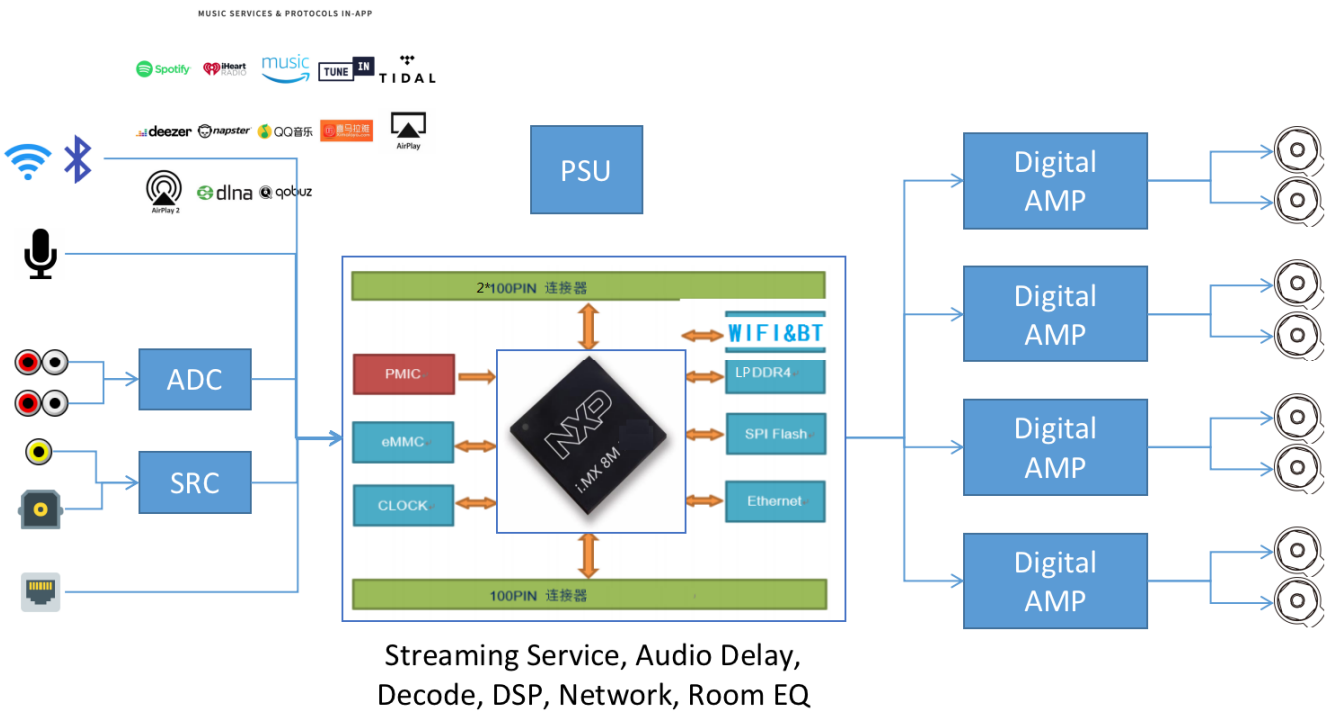

Figure 1. AVR/AVP/CI Amplifier

5 Explanation of part number

X 501 - W 1 R 4 M 16 - AA
① ② ③ ④ ⑤

ITEM	Paraphrase	Field name	Content
X①	Platform code	501	i.MX8M plus
W②	WIFI support	0	No WiFi
		1	WIFI6
		2	WIFI6E
R③	DRAM size(uint:Byte)	1	1GB
		2	2GB
		4	4GB
M④	Flash Memory size(uint:Byte)	4	4GB
		8	8GB
		16…	16GB…
-⑤	Extended Feature Code	AA	Base version
		AB	TBD
		AC	Dolby supported
		AD	Dolby & DTS supported

6 Board configuration

Default parameters:

Product model	X501-W1R4M16-AA
CPU	MIMX8ML4CVNKZAB
Power supply	4.5V to 5.5V
WLAN	802.11a/b/g/n/ac/ax
BT	5.3
Ethernet	10/100/1000M
LPDDR4	4GB
Memory	16GB eMMC

Streaming service
Airplay2, Home-kit, Spotify-Connect,Tidal,Amazon Music,DLNA DMP/DMR/DMS etc
Matrix - Multiple channels Audio
8 x 8 I/O matrix, I2S format
Internal software decoding
Cloud linked, IoT manager system
Work with Hansong App and Hansong Cloud service
Various audio format supported, and Hi-Res streaming
LPCM, MP3, AAC/AAC+, AC3, OGG Vorbis, HE-AAC, WMA decode capability
Lossless audio decode, like FLAC, APE and DSD Support
Up to 24bit 192kHz sample rate for several audio format
Various UI interface : WebUI, Mobile App, Cloud remote

7 CPU feature

Feature	i.MX 8M Plus QuadLite
Main CPU	4x Cortex-A53 @ 1.6GHz, 512kB L2
Microcontroller	Cortex-M7 800MHz
DDR	x32 LPDDR4, DDR4
GPU	16 GFLOPS (High precision) OpenGL® ES 3.1/3.0、Vulkan®、Open CL™ 1.2 FP、OpenVG™ 1.1
Display Features	LCDIF
Display Interfaces	MIPI-DSI、HDMI 2.0a Tx、LVDS (4/8-lane) Tx
Video Decode	1080p60、h.265 / 4、VP9、VP8
Video Encode	1080p60、h.265/4
Audio Interface	18x I2S TDM、DSD512、S/PDIF Tx + Rx、eARC、ASRC
Digital Mic Input	8ch PDM DMIC input
Camera Interface	2x MIPI-CSI (4-lanes each)
USB	2x USB3.0
Ethernet	2x RGMII
SDIO/eMMC	3x SDIO/eMMC
I2C	4
Packages	15x15mm, 0.5p
Temperature	-40°C to 105°C (Tj)

8 IO CONFIGURE

8.1 General interface

Function	Quantity	Parameter
MIPI DSI	1	Support a four-lane MIPI display serial interface operating up to a maximum bit rate of 1.5 Gbps.
LVDS	2	LVDS Display Bridge is used to connect the LCDIF to External LVDS Display Interface. LDB supports two channels; each channel has following signals: • One clock pair • Four data pairs
HDMI	1	HDMI 2.0a Tx supporting one display • Resolutions of: 720 x 480p60, 1280 x 720p60, 1920 x 1080p60, 1920 x 1080p120, 3840 x 2160p30 • Pixel clock up to 297 MHz Audio support • 32-channel audio output support • 1 SPDIF audio eARC input support
MIPI CSI	2	Support two four-lane MIPI camera serial interfaces, which operates up to a maximum bit rate of 1.5 Gbps.
USB	2	Two USB controllers and PHYs that support USB 3.0. Each USB instance contains: • USB 3.0 core, which can operate in 2.0 mode
UART	3	UART2 for Debug(A53) UART4 for Debug(M4) UART3 for free usage(3.3V)
SAI	3	provides a synchronous audio interface (SAI) that supports full duplex serial interfaces with frame synchronization, such as I2S, AC97, TDM, and codec/DSP interfaces.
SPDIF	1	A standard audio file transfer format, developed jointly by the Sony and Phillips corporations. It supports Transmitter and Receiver functionality.
Ethernet	2	2*RGMII ,10/100/1000Mbps adaptive:
eCSPI	2	Full-duplex enhanced Synchronous Serial Interface, with data rate up to 52 Mbit/s. Configurable to support Master/Slave modes.
I2C	3	I2C provides serial interface for external devices. Data rates of up to 320 kbps are supported.
SDIO	1	SD/SDIO standard, up to version 3.0 1.8 V and 3.3 V operation, but do not support 1.2 V operation.
PWM	4	The pulse-width modulator (PWM) has a 16-bit counter and is optimized to generate sound from stored sample audio images. It can also generate tones. It uses 16-bit resolution and a 4x16 data FIFO to generate sound.

PDM	**1**	**Supports a maximum of 4 lines and 8 channels**

8.2 Interface communication rate supported

The table below lists some common interface communication speeds. We recommend that when using these interfaces, the speed set should not exceed the maximum value in the table.

Parameter	MIN	TYP	MAX	UINT
UART(2,3,4)	-	115200	4M	bps
IIC(2,3,4)	-	100	320	Kbps
SD/SDIO/MMC	-	25	200	Mbps
USB(1,2)	-	-	5	Gbps
SPI	-	-	52	Mbps

8.3 IO Schmatic

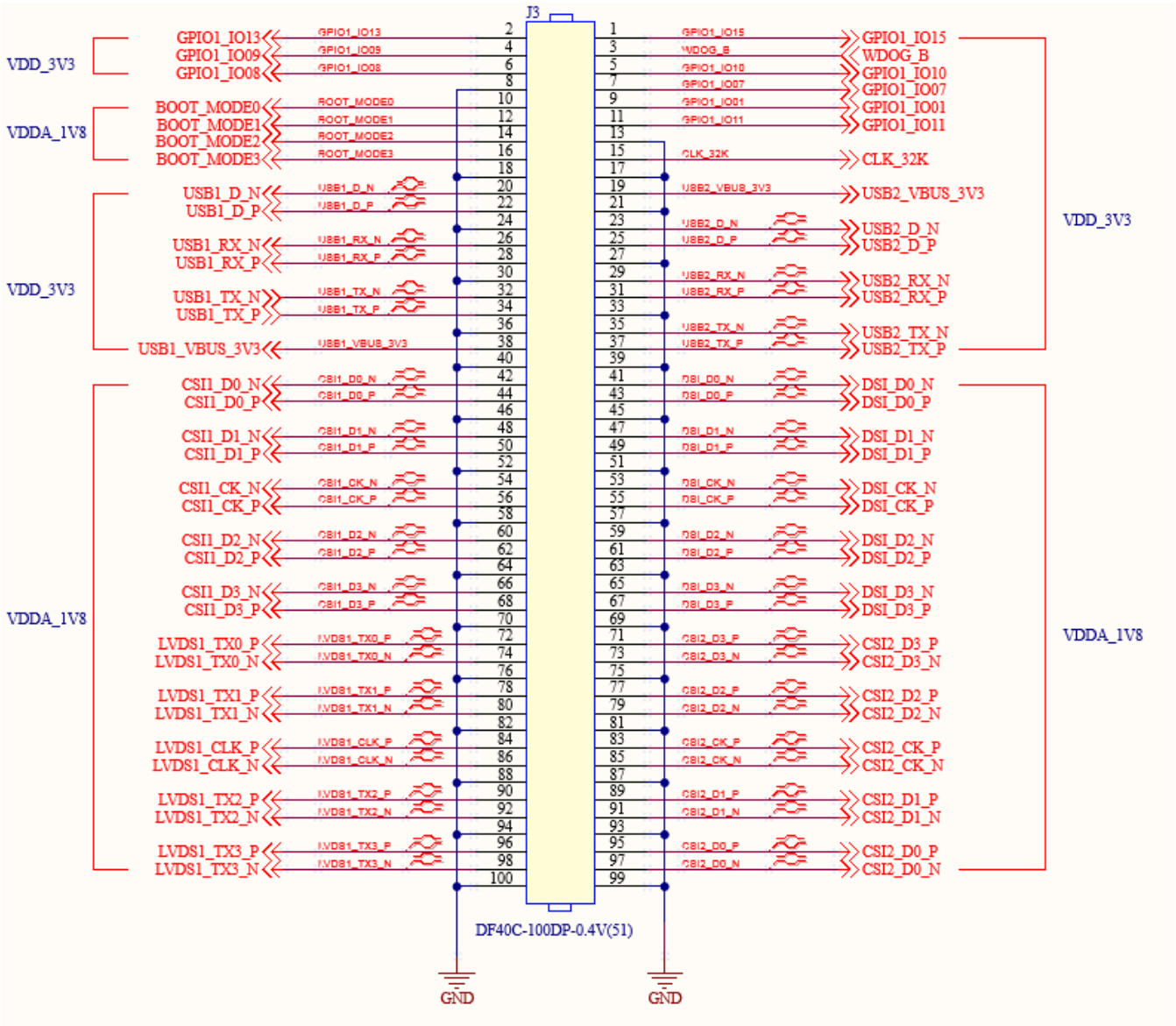

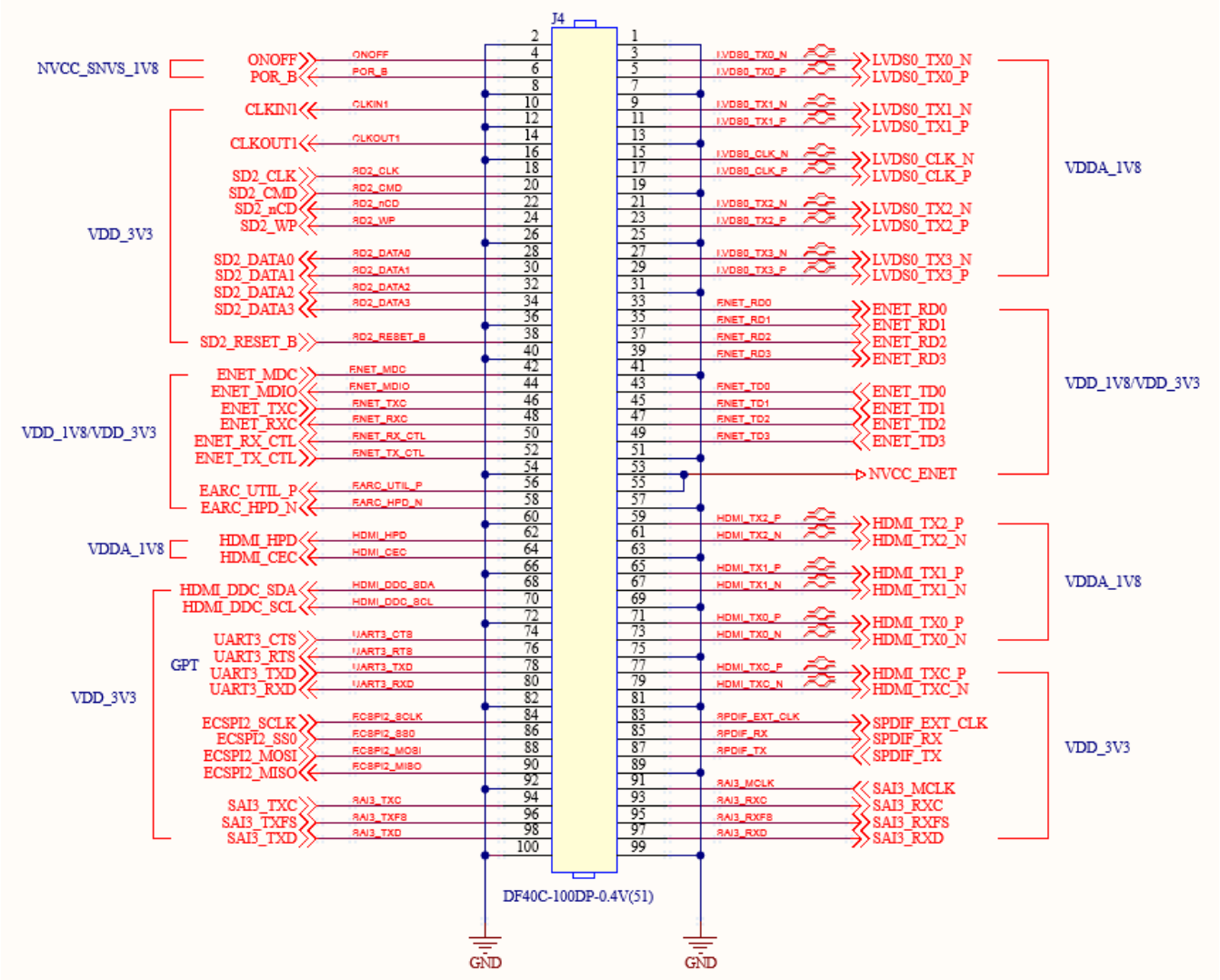
J4
NVCC_SNVS_1V8
ONOFF
POR_B
CLKIN1
CLKOUT1
SD2_CLK
SD2_CMD
SD2_nCD
SD2_WP
SD2_DATA0
SD2_DATA1
SD2_DATA2
SD2_DATA3
SD2_RESET_B
VDD_3V3
ENET_MDC
ENET_MDIO
ENET_TXC
ENET_RXC
ENET_RX_CTL
ENET_TX_CTL
EARC_UTIL_P
EARC_HPD_N
VDD_1V8/VDD_3V3
HDMI_HPD
HDMI_CEC
VDDA_1V8
HDMI_DDC_SDA
HDMI_DDC_SCL
UART3_CTS
UART3_RTS
UART3_TXD
UART3_RXD
GPT
VDD_3V3
ECSPI2_SCLK
ECSPI2_SS0
ECSPI2_MOSI
ECSPI2_MISO
SAI3_TXC
SAI3_TXFS
SAI3_TXD
LVDS0_TX0_N
LVDS0_TX0_P
LVDS0_TX1_N
LVDS0_TX1_P
LVDS0_CLK_N
LVDS0_CLK_P
LVDS0_TX2_N
LVDS0_TX2_P
LVDS0_TX3_N
LVDS0_TX3_P
VDDA_1V8
ENET_RD0
ENET_RD1
ENET_RD2
ENET_RD3
ENET_TD0
ENET_TD1
ENET_TD2
ENET_TD3
NVCC_ENET
VDD_1V8/VDD_3V3
HDMI_TX2_P
HDMI_TX2_N
HDMI_TX1_P
HDMI_TX1_N
HDMI_TX0_P
HDMI_TX0_N
HDMI_TXC_P
HDMI_TXC_N
VDDA_1V8
SPDIF_EXT_CLK
SPDIF_RX
SPDIF_TX
SAI3_MCLK
SAI3_RXC
SAI3_RXFS
SAI3_RXD
VDD_3V3
DF40C-100DP-0.4V(51)
GND
GND

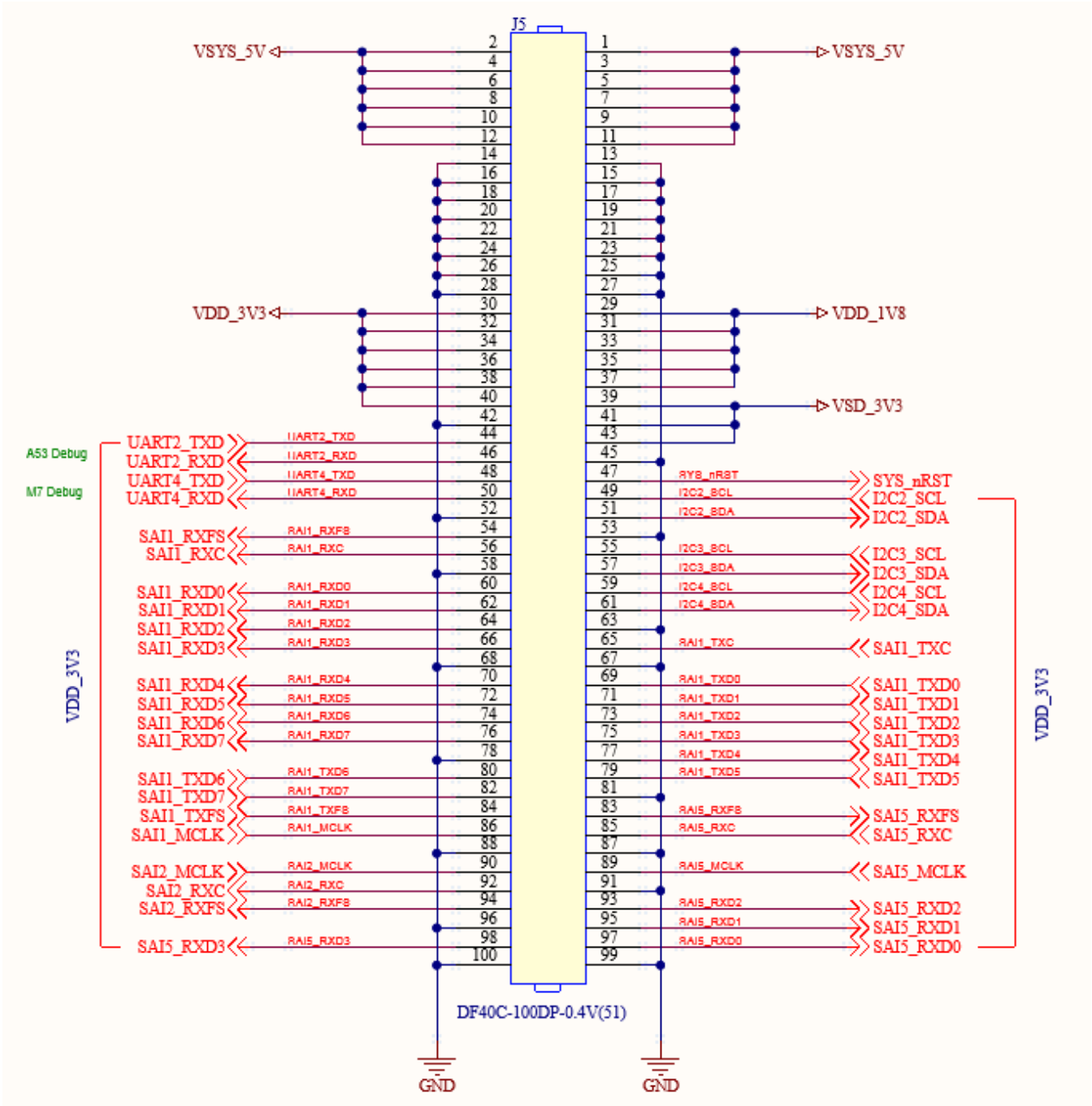
J5
VSYS_5V
VSYS_5V
VDD_3V3
VDD_1V8
VSD_3V3
A53 Debug
M7 Debug
UART2_TXD
UART2_RXD
UART4_TXD
UART4_RXD
SAI1_RXFS
SAI1_RXC
SAI1_RXD0
SAI1_RXD1
SAI1_RXD2
SAI1_RXD3
SAI1_RXD4
SAI1_RXD5
SAI1_RXD6
SAI1_RXD7
SAI1_TXD6
SAI1_TXD7
SAI1_TXFS
SAI1_MCLK
SAI2_MCLK
SAI2_RXC
SAI2_RXFS
SAI5_RXD3
SYS_nRST
I2C2_SCL
I2C2_SDA
I2C3_SCL
I2C3_SDA
I2C4_SCL
I2C4_SDA
SAI1_TXC
SAI1_TXD0
SAI1_TXD1
SAI1_TXD2
SAI1_TXD3
SAI1_TXD4
SAI1_TXD5
SAI5_RXFS
SAI5_RXC
SAI5_MCLK
SAI5_RXD2
SAI5_RXD1
SAI5_RXD0
VDD_3V3
VDD_3V3
DF40C-100DP-0.4V(51)
GND
GND

8.4 Connector type

In order to ensure the reliability of the installation, we strongly recommend use the model that matches the module connector when deciding on the material selection.

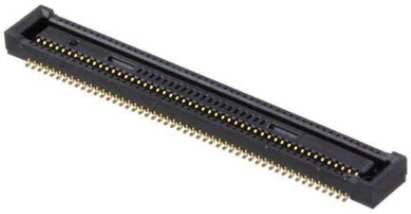

DF40C-100DP-0.4V(51)

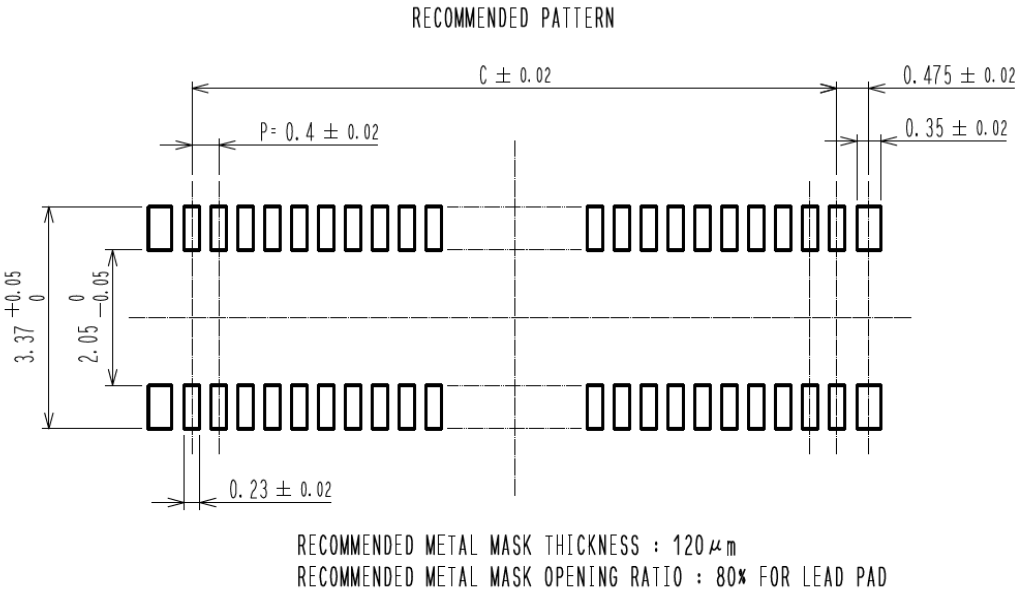

8.5 IO MAP

J3									
POWER RAIL	FUNCTIONALITY	Sign Name	CPU 球号	Pin No.	Pin No.	CPU 球号	Sign Name	FUNCTIONALITY	POWER RAIL
VDD_3V3	GPIO1_IO13	GPIO1_IO13	A6	2	1	B4	GPIO1_IO05	GPIO1_IO05	VDD_3V3
VDD_3V3	GPIO1_IO09	GPIO1_IO09	B8	4	3	B6	WDOG_B	GPIO1_IO02	VDD_3V3
VDD_3V3	GPIO1_IO08	GPIO1_IO08	A8	6	5	B7	GPIO1_IO10	GPIO1_IO10	VDD_3V3
0V	GND	GND		8	7	F6	GPIO1_IO07	GPIO1_IO07	VDD_3V3
VDD_1V8	BOOT_MODE0	BOOT_MODE0	F8	10	9	E8	GPIO1_IO01	GPIO1_IO01	VDD_3V3
VDD_1V8	BOOT_MODE1	BOOT_MODE1	G8	12	11	D8	GPIO1_IO11	GPIO1_IO11	VDD_3V3
VDD_1V8	BOOT_MODE2	BOOT_MODE2	G10	14	13		GND	GND	0V
VDD_1V8	BOOT_MODE3	BOOT_MODE3	G12	16	15	A7	CLK_32K	GPIO1_IO00	VDD_3V3
0V	GND	GND		18	17		GND	GND	0V
VDD_3V3	USB1_D_N	USB1_D_N	E10	20	19	D12	USB2_VBUS_3V3	USB2_VBUS	VDD_3V3
VDD_3V3	USB1_D_P	USB1_D_P	D10	22	21		GND	GND	0V
0V	GND	GND		24	23	E14	USB2_D_N	USB2_D_N	VDD_3V3
VDD_3V3	USB1_RX_N	USB1_RX_N	B9	26	25	D14	USB2_D_P	USB2_D_P	VDD_3V3
VDD_3V3	USB1_RX_P	USB1_RX_P	A9	28	27		GND	GND	0V
0V	GND	GND		30	29	B12	USB2_RX_N	USB2_RX_N	VDD_3V3
VDD_3V3	USB1_TX_N	USB1_TX_N	B10	32	31	A12	USB2_RX_P	USB2_RX_P	VDD_3V3
VDD_3V3	USB1_TX_P	USB1_TX_P	A10	34	33		GND	GND	0V
0V	GND	GND		36	35	B13	USB2_TX_N	USB2_TX_N	VDD_3V3
VDD_3V3	USB1_VBUS	USB1_VBUS_3V3	A11	38	37	A13	USB2_TX_P	USB2_TX_P	VDD_3V3
0V	GND	GND		40	39		GND	GND	0V
VDDA_1V8	MIPI_CSI1_D0_N	CSI1_DN0	E18	42	41	B16	DSI_DN0	MIPI_DSI1_D0_N	VDDA_1V8
VDDA_1V8	MIPI_CSI1_D0_P	CSI1_DP0	D18	44	43	A16	DSI_DP0	MIPI_DSI1_D0_P	VDDA_1V8
0V	GND	GND		46	45		GND	GND	0V
VDDA_1V8	MIPI_CSI1_D1_N	CSI1_DN1	E20	48	47	B17	DSI_DN1	MIPI_DSI1_D1_N	VDDA_1V8
VDDA_1V8	MIPI_CSI1_D1_P	CSI1_DP1	D20	50	49	A17	DSI_DP1	MIPI_DSI1_D1_P	VDDA_1V8
0V	GND	GND		52	51		GND	GND	0V
VDDA_1V8	MIPI_CSI1_CLK_N	CSI1_CKN	E22	54	53	B18	DSI_CKN	MIPI_DSI1_CLK_N	VDDA_1V8
VDDA_1V8	MIPI_CSI1_CLK_P	CSI1_CKP	D22	56	55	A18	DSI_CKP	MIPI_DSI1_CLK_P	VDDA_1V8

0V	GND	GND		58	57		GND	GND	0V
VDDA_1V8	MIPI_CSI1_D2_N	CSI1_DN2	E24	60	59	B19	DSI_DN2	MIPI_DSI1_D2_N	VDDA_1V8
VDDA_1V8	MIPI_CSI1_D2_P	CSI1_DP2	D24	62	61	A19	DSI_DP2	MIPI_DSI1_D2_P	VDDA_1V8
0V	GND	GND		64	63		GND	GND	0V
VDDA_1V8	MIPI_CSI1_D3_N	CSI1_DN3	E26	66	65	B20	DSI_DN3	MIPI_DSI1_D3_N	VDDA_1V8
VDDA_1V8	MIPI_CSI1_D3_P	CSI1_DP3	D26	68	67	A20	DSI_DP3	MIPI_DSI1_D3_P	VDDA_1V8
0V	GND	GND		70	69		GND	GND	0V
VDDA_1V8	LVDS1_D0_P	LVDS1_TX0_P	A26	72	71	B21	CSI2_DN3	MIPI_CSI2_D3_N	VDDA_1V8
VDDA_1V8	LVDS1_D0_N	LVDS1_TX0_N	B26	74	73	A21	CSI2_DP3	MIPI_CSI2_D3_P	VDDA_1V8
0V	GND	GND		76	75		GND	GND	0V
VDDA_1V8	LVDS1_D1_P	LVDS1_TX1_P	A27	78	77	A22	CSI2_DN2	MIPI_CSI2_D2_N	VDDA_1V8
VDDA_1V8	LVDS1_D1_N	LVDS1_TX1_N	B27	80	79	B22	CSI2_DP2	MIPI_CSI2_D2_P	VDDA_1V8
0V	GND	GND		82	81		GND	GND	0V
VDDA_1V8	LVDS1_CLK_P	LVDS1_CLK_P	A28	84	83	A23	CSI2_CKP	MIPI_CSI2_CLK_P	VDDA_1V8
VDDA_1V8	LVDS1_CLK_N	LVDS1_CLK_N	B28	86	85	B23	CSI2_CKN	MIPI_CSI2_CLK_N	VDDA_1V8
0V	GND	GND		88	87		GND	GND	0V
VDDA_1V8	LVDS1_D2_P	LVDS1_TX2_P	B29	90	89	A24	CSI2_DP1	MIPI_CSI2_D1_P	VDDA_1V8
VDDA_1V8	LVDS1_D2_N	LVDS1_TX2_N	C28	92	91	B24	CSI2_DN1	MIPI_CSI2_D1_N	VDDA_1V8
0V	GND	GND		94	93		GND	GND	0V
VDDA_1V8	LVDS1_D3_P	LVDS1_TX3_P	C29	96	95	A25	CSI2_DP0	MIPI_CSI2_D0_P	VDDA_1V8
VDDA_1V8	LVDS1_D3_N	LVDS1_TX3_N	D28	98	97	B25	CSI2_DN0	MIPI_CSI2_D0_N	VDDA_1V8
0V	GND	GND		100	99		GND	GND	0V

J4									
POWER RAIL	FUNCTIONALITY	Sign Name	CPU 球号	Pin No.	Pin No.	CPU 球号	Sign Name	FUNCTIONALITY	POWER RAIL
0V	GND	GND		2	1		GND	GND	0V
NVCC_SNVS_1V8	ONOFF	ONOFF	G22	4	3	E28	LVDS0_TX0_N	LVDS0_D0_N	VDDA_1V8
NVCC_SNVS_1V8	POR_B	POR_B	J29	6	5	D29	LVDS0_TX0_P	LVDS0_D0_P	VDDA_1V8
0V	GND	GND		8	7		GND	GND	0V
VDD_3V3	CLKIN1	CLKIN1	K28	10	9	F28	LVDS0_TX1_N	LVDS0_D1_N	VDDA_1V8
0V	GND	GND		12	11	E29	LVDS0_TX1_P	LVDS0_D1_P	VDDA_1V8
VDD_3V3	CLKOUT1	CLKOUT1	K29	14	13		GND	GND	0V
0V	GND	GND		16	15	G28	LVDS0_CLK_N	LVDS0_CLK_N	VDDA_1V8
VDD_3V3	SD2_CLK	SD2_CLK	AB29	18	17	F29	LVDS0_CLK_P	LVDS0_CLK_P	VDDA_1V8

VDD_3V3	SD2_CMD	SD2_CMD	AB28	20	19		GND	GND	0V
VDD_3V3	SD2_CD_B	SD2_nCD	AD29	22	21	H28	LVDS0_TX2_N	LVDS0_D2_N	VDDA_1V8
VDD_3V3	SD2_WP	SD2_WP	AC26	24	23	G29	LVDS0_TX2_P	LVDS0_D2_P	VDDA_1V8
0V	GND	GND		26	25		GND	GND	0V
VDD_3V3	SD2_DATA0	SD2_DATA0	AC28	28	27	J28	LVDS0_TX3_N	LVDS0_D3_N	VDDA_1V8
VDD_3V3	SD2_DATA1	SD2_DATA1	AC29	30	29	H29	LVDS0_TX3_P	LVDS0_D3_P	VDDA_1V8
VDD_3V3	SD2_DATA2	SD2_DATA2	AA26	32	31		GND	GND	0V
VDD_3V3	SD2_DATA3	SD2_DATA3	AA25	34	33	AG29	ENET_RD0	ENET_RD0	VDD_1V8/VDD_3V3
0V	GND	GND		36	35	AG28	ENET_RD1	ENET_RD1	VDD_1V8/VDD_3V3
VDD_3V3	SD2_RESET_B	SD2_RESET_B	AD28	38	37	AF29	ENET_RD2	ENET_RD2	VDD_1V8/VDD_3V3
0V	GND	GND		40	39	AF28	ENET_RD3	ENET_RD3	VDD_1V8/VDD_3V3
VDD_1V8/VDD_3V3	ENET_MDC	ENET_MDC	AH28	42	41		GND	GND	0V
VDD_1V8/VDD_3V3	ENET_MDIO	ENET_MDIO	AH29	44	43	AC25	ENET_TD0	ENET_TD0	VDD_1V8/VDD_3V3
VDD_1V8/VDD_3V3	ENET_TXC	ENET_TXC	AE24	46	45	AE26	ENET_TD1	ENET_TD1	VDD_1V8/VDD_3V3
VDD_1V8/VDD_3V3	ENET_RXC	ENET_RXC	AE29	48	47	AF26	ENET_TD2	ENET_TD2	VDD_1V8/VDD_3V3
VDD_1V8/VDD_3V3	ENET_RX_CTL	ENET_RX_CTL	AE28	50	49	AD24	ENET_TD3	ENET_TD3	VDD_1V8/VDD_3V3
VDD_1V8/VDD_3V3	ENET_TX_CTL	ENET_TX_CTL	AF24	52	51		GND	GND	0V
0V	GND	GND		54	53	AA24	NVCC_ENET	NVCC_ENET	VDD_1V8/VDD_3V3
VDDA_1V8	EARC_N_HPD	EARC_N_HPD	AH22	56	55	AA24	NVCC_ENET	NVCC_ENET	VDD_1V8/VDD_3V3
VDDA_1V8	EARC_P_UTIL	EARC_P_UTIL	AJ23	58	57		GND	GND	0V
0V	GND	GND		60	59	AH27	HDMI_TXP2	HDMI_TX2_P	VDDA_1V8
VDD_3V3	HDMI_HPD	HDMI_HPD	AE22	62	61	AJ27	HDMI_TXN2	HDMI_TX2_N	VDDA_1V8
VDD_3V3	HDMI_CEC	HDMI_CEC	AD22	64	63		GND	GND	0V
0V	GND	GND		66	65	AH26	HDMI_TXP1	HDMI_TX1_P	VDDA_1V8
VDD_3V3	HDMI_DDC_SDA	HDMI_DDC_SDA	AF22	68	67	AJ26	HDMI_TXN1	HDMI_TX1_N	VDDA_1V8
VDD_3V3	HDMI_DDC_SCL	HDMI_DDC_SCL	AC22	70	69		GND	GND	0V
0V	GND	GND		72	71	AH25	HDMI_TXP0	HDMI_TX0_P	VDDA_1V8
VDD_3V3	ECSPI1_MISO	UART3_CTS	AD20	74	73	AJ25	HDMI_TXN0	HDMI_TX0_N	VDDA_1V8
VDD_3V3	ECSPI1_SS0	UART3_RTS	AE20	76	75		GND	GND	0V
VDD_3V3	ECSPI1_MOSI	UART3_TXD	AC20	78	77	AH24	HDMI_TXCP	HDMI_TXC_P	VDDA_1V8
VDD_3V3	ECSPI1_SCLK	UART3_RXD	AF20	80	79	AJ24	HDMI_TXCN	HDMI_TXC_N	VDDA_1V8
0V	GND	GND		82	81		GND	GND	0V
VDD_3V3	ECSPI2_SCLK	ECSPI2_SCLK	AH21	84	83	AC18	SPDIF_EXT_CLK	SPDIF_EXT_CLK	VDD_3V3
VDD_3V3	ECSPI2_SCLK	ECSPI2_SS0	AJ22	86	85	AD18	SPDIF_RX	SPDIF_RX	VDD_3V3

VDD_3V3	ECSPI2_SS0	ECSPI2_MOSI	AJ21	88	87	AE18	SPDIF_TX	SPDIF_TX	VDD_3V3
VDD_3V3	ECSPI2_MOSI	ECSPI2_MISO	AH20	90	89		GND	GND	0V
0V	GND	GND		92	91	AJ20	SAI3_MCLK	SAI3_MCLK	VDD_3V3
VDD_3V3	SAI3_TXC	SAI3_TXC	AH19	94	93	AJ18	SAI3_RXC	SAI3_RXC	VDD_3V3
VDD_3V3	SAI3_TXFS	SAI3_TXFS	AC16	96	95	AJ19	SAI3_RXFS	SAI3_RXFS	VDD_3V3
VDD_3V3	SAI3_TXD	SAI3_TXD	AH18	98	97	AF18	SAI3_RXD	SAI3_RXD	VDD_3V3
0V	GND	GND		100	99		GND	GND	0V

J5									
POWER RAIL	FUNCTIONALITY	Sign Name	CPU 球号	Pin No.	Pin No.	CPU 球号	Sign Name	FUNCTIONALITY	POWER RAIL
		VSYS_5V		2	1		VSYS_5V		
		VSYS_5V		4	3		VSYS_5V		
		VSYS_5V		6	5		VSYS_5V		
		VSYS_5V		8	7		VSYS_5V		
		VSYS_5V		10	9		VSYS_5V		
		VSYS_5V		12	11		VSYS_5V		
0V	GND	GND		14	13		GND	GND	0V
0V	GND	GND		16	15		GND	GND	0V
0V	GND	GND		18	17		GND	GND	0V
0V	GND	GND		20	19		GND	GND	0V
0V	GND	GND		22	21		GND	GND	0V
0V	GND	GND		24	23		GND	GND	0V
0V	GND	GND		26	25		GND	GND	0V
0V	GND	GND		28	27		GND	GND	0V
VDD_3V3		VDD_3V3		30	29		VDD_1V8		VDD_1V8
VDD_3V3		VDD_3V3		32	31		VDD_1V8		VDD_1V8
VDD_3V3		VDD_3V3		34	33		VDD_1V8		VDD_1V8
VDD_3V3		VDD_3V3		36	35		VDD_1V8		VDD_1V8
VDD_3V3		VDD_3V3		38	37		VDD_1V8		VDD_1V8
VDD_3V3		VDD_3V3		40	39		CSD_3V3		CSD_3V3
0V	GND	GND		42	41		CSD_3V3		CSD_3V3
VDD_3V3	UART2_TXD	UART2_TXD	AH4	44	43		CSD_3V3		CSD_3V3
VDD_3V3	UART2_RXD	UART2_RXD	AF6	46	45		GND	GND	0V
VDD_3V3	UART4_TXD	UART4_TXD	AH5	48	47		SYS_nRST	PMIC_RST_B	PMIC
VDD_3V3	UART4_RXD	UART4_RXD	AJ5	50	49	AH6	I2C2_SCL	I2C2_SCL	VDD_3V3

0V	GND	GND		52	51	AE8	I2C2_SDA	I2C2_SDA	VDD_3V3
VDD_3V3	SAI1_RXFS	SAI1_RXFS	AJ9	54	53		GND	GND	0V
VDD_3V3	SAI1_RXC	SAI1_RXC	AH8	56	55	AJ7	I2C3_SCL	I2C3_SCL	VDD_3V3
0V	GND	GND		58	57	AJ6	I2C3_SDA	I2C3_SDA	VDD_3V3
VDD_3V3	SAI1_RXD0	SAI1_RXD0	AC10	60	59	AF8	I2C4_SCL	I2C4_SCL	VDD_3V3
VDD_3V3	SAI1_RXD1	SAI1_RXD1	AF10	62	61	AD8	I2C4_SDA	I2C4_SDA	VDD_3V3
VDD_3V3	SAI1_RXD2	SAI1_RXD2	AH9	64	63		GND	GND	0V
VDD_3V3	SAI1_RXD3	SAI1_RXD3	AJ8	66	65	AJ12	SAI1_TXC	SAI1_TXC	VDD_3V3
0V	GND	GND		68	67		GND	GND	0V
VDD_3V3	SAI1_RXD4	SAI1_RXD4	AD10	70	69	AJ11	SAI1_TXD0	SAI1_TXD0	VDD_3V3
VDD_3V3	SAI1_RXD5	SAI1_RXD5	AE10	72	71	AJ10	SAI1_TXD1	SAI1_TXD1	VDD_3V3
VDD_3V3	SAI1_RXD6	SAI1_RXD6	AH10	74	73	AH11	SAI1_TXD2	SAI1_TXD2	VDD_3V3
VDD_3V3	SAI1_RXD7	SAI1_RXD7	AH12	76	75	AD12	SAI1_TXD3	SAI1_TXD3	VDD_3V3
0V	GND	GND		78	77	AH13	SAI1_TXD4	SAI1_TXD4	VDD_3V3
VDD_3V3	SAI1_TXD6	SAI1_TXD6	AC12	80	79	AH14	SAI1_TXD5	SAI1_TXD5	VDD_3V3
VDD_3V3	SAI1_TXD7	SAI1_TXD7	AJ13	82	81		GND	GND	0V
VDD_3V3	SAI1_TXFS	SAI1_TXFS	AF12	84	83	AC14	SAI5_RXFS	SAI5_RXFS	VDD_3V3
VDD_3V3	SAI1_MCLK	SAI1_MCLK	AE12	86	85	AD14	SAI5_RXC	SAI5_RXC	VDD_3V3
0V	GND	GND		88	87		GND	GND	0V
VDD_3V3	VDD_3V3	SAI2_MCLK	AJ15	90	89	AF14	SAI5_MCLK	SAI5_MCLK	VDD_3V3
VDD_3V3	SAI2_RXC	SAI2_RXC	AJ16	92	91		GND	GND	0V
VDD_3V3	SAI2_RXFS	SAI2_RXFS	AH17	94	93	AF16	SAI5_RXD2	SAI5_RXD2	VDD_3V3
0V	GND	GND		96	95	AD16	SAI5_RXD1	SAI5_RXD1	VDD_3V3
VDD_3V3	SAI5_RXD3	SAI5_RXD3	AE14	98	97	AE16	SAI5_RXD0	SAI5_RXD0	VDD_3V3
VDD_3V3	SAI5_RXD0	SAI5_RXD0	AE16	100	99		GND	GND	0V

9 Board interfaces details

9.1 Power supply

We recommend using an external DCDC power supply that supports at least 5V@2A for the module.
VDD_3V3 and VDD_1V8 are the output voltages of the module. These two power supplies are used to provide pull-up for the IO port, please not use them to drive peripherals as far as possible。

PIN name	I/O	MIN	TYP	MAX	UINT	I limit
VSYS_5V	I	4.5	5.0	5.5V	V	-
VDD_3V3	O	-	3.3	-	V	150mA
VDD_1V8	O	-	3.3	-	V	150mA

9.2 Reset and control

he X501 module opens up some CPU and system reset and control pins for developers to use. But usually we only need to connect SYS_nRST to an external key to achieve the function of complete reset of the module.
For more informations,please check:https://www.nxp.com.cn/docs/en/data-sheet/IMX8MMCEC.pdf

PIN name	I/O	Default	PIN number
POR_B	I	CPU reset， keep float if not use	J4_6
SYS_nRST	I	System power reset, active low, internal pull up 1.8V	J5_47
ONOFF	I	CPU wakeup， keep float if not use	J4_4

9.3 Boot selector

The X501 module reserves four pins(J3-10,J3-12,J3-14,J3-16) for boot type configuration, which is convenient for developers to debug the hardware and software。
Although the X501 module has a default boot mode of EMMC/SD3, users can still choose other boot devices by changing the value of the following IO before system power-on.

Function	PIN name	I/O	Default	PIN number
Boot mode	BOOT_MODE0	I	0	J3_10
	BOOT_MODE1	I	1	J3_12
	BOOT_MODE1	I	0	J3_14
	BOOT_MODE1	I	0	J3_16

***Default config is eMMC/uSDHC3.**

9.4 Boot mode setting

The device supports 16 boot modes but only several are supported on the chip and the others are reserved for future use. The boot mode is selected based on the binary value stored in the internal BOOT_MODE[3:0] register.
The BOOT_MODE[3:0] is initialized by sampling the BOOT_MODE[3:0] inputs on the rising edge of the POR_B. After these inputs are sampled, their subsequent state does not affect the contents of the BOOT_MODE[3:0] internal register. The state of the internal BOOT_MODE[3:0] register may be read from the IPP_BOOT_MODE[3:0] field of the
SRC Boot Mode Register (SRC_SBMR2). The available boot modes are: Boot From Fuses, serial boot via USB, and Internal Boot. See this table for settings:

i.MX8M Plus Boot Mode

BOOT_MODE3	BOOT_MODE2	BOOT_MODE1	BOOT_MODE0	Boot Modes
0	0	0	0	Boot From Internal Fuses
0	0	0	1	USB Serial Download
0	*0*	*1*	*0*	*USDHC3 (eMMC boot only, SD3 8-bit) Default*
0	0	1	1	USDHC2 (SD boot only, SD2)
0	1	0	0	NAND 8-bit single device 256 page
0	1	0	1	NAND 8-bit single device 512 page
0	1	1	0	QSPI 3B Read
0	1	1	1	QSPI Hyperflash 3.3V
1	0	0	0	ecSPI Boot
1	0	0	1	Reserved
1	0	1	0	FLEXSPI Serial NAND 2k page
1	0	1	1	FLEXSPI Serial NAND 4k page
1	1	0	0	Reserved
1	1	0	1	Reserved
1	1	1	0	Reserved
1	1	1	1	Reserved

Fuses mode:

Read boot information from internal Fuses. NXP recommends using this method for mass production.

Serial Downloader mode:

supports downloading programs from the USB_OTG1 port to Flash. have to be aware of is
In this mode, the priority of UART1 and UART2 is higher than that of USB_OTG port.
Under the module, the two serial ports check that the data will not enter the USB programming mode, and the computer cannot detect Device, Mfgtools is also unavailable.

Internal Boot mode:

Read the boot configuration bits from GPIO. NXP is recommended for development mode. But here In mode, there is no need to write Fuse (one-time programming, non-erasable), it is convenient to modify the startup mode, many users Directly used in mass production.

9.5 UART

The X501 module has three UARTs available to users, of which Uart 2 is usually used to debug the Cortex A53 and Uart4 is usually used to debug the Cortex M7. Uart 3 is freely available for user distribution and includes flow control options. However, it should be noted that Uart 3 and SPI1 are multiplexed

Function	Pin name	I/O	Default	Pin number
UART2	UART2_TXD	O	UART2 for Debug(A53)	J5_44
	UART2_RXD	I		J5_46
UART3	UART3_RTS	O	UART Flowcontrol	J4_76
	UART3_CTS	I		J4_74
	UART3_TXD	O	Free UART	J4_78
	UART3_RXD	I		J4_80
UART4	UART4_TXD	O	UART4 for Debug(M7)	J5_48
	UART4_RXD	I		J5_50

9.6 IIC

The X501 module provides three IIC interfaces for developers, IIC2 and IIC3 had added pull-up 4.7K resistors to the 3.3V by default. The IIC4 interface is seted as OD by default. Developers can choose the pull-up voltage according to different design requirement.

Function	Pin name	I/O	Default	Pin number
I2C2	I2C2_ SCL	O	I2C2_ SCL	J5_49
	I2C2_SDA	I/O	I2C2_SDA	J5_51
I2C3	I2C3_SCL	O	I2C3_SCL	J5_55
	I2C3_SDA	I/O	I2C3_ SDA	J5_57
I2C4	I2C4_SCL	O	I2C4_SCL	J5_59
	I2C4_SDA	I/O	I2C4_SDA	J5_61

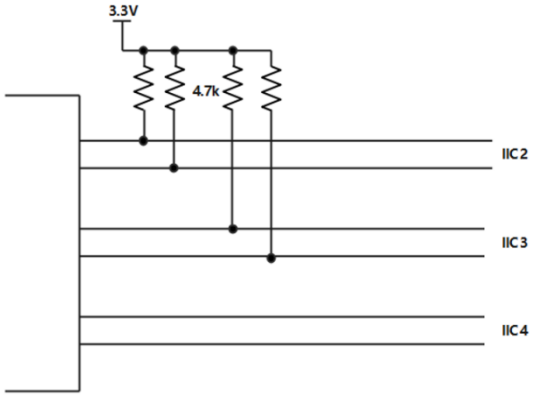

9.7 Ethernet

The Ethernet Media Access Controller (MAC) is designed to support 10/100/1000 Mbps Ethernet/IEEE 802.3 networks. External transceiver interface and transceiver function are required to complete the interface to the media. The module has dedicated hardware to support the IEEE 1588 standard.

Function	Pin name	I/O	Default	Pin number
ERHERNET 1	ENET_MDC	O	MD CLK	J4_42
	ENET_MDIO	I/O	MDIO	J4_44
	ENET_TXD3	O	ENET_TXD3	J4_49
	ENET_TXD2	O	ENET_TXD2	J4_47
	ENET_TXD1	O	ENET_TXD1	J4_45
	ENET_TXD0	O	ENET_TXD0	J4_43
	ENET_TXC	O	ENET_TXC	J4_46
	ENET_TX_CTL	O	ENET_TX_CTL	J4_52
	ENET_RXC	I	ENET_RXC	J4_48
	ENET_RXDV	I	ENET_RX_CTL	J4_50
	ENET_RXD0	I	ENET_RXD0	J4_33
	ENET_RXD1	I	ENET_RXD1	J4_35
	ENET_RXD2	I	ENET_RXD2	J4_37
	ENET_RXD3	I	ENET_RXD3	J4_39

Function	Pin name	I/O	Default	Pin number
ERHERNET 2	ENET_MDC	O	MD CLK	J5_64
	ENET_MDIO	I/O	MDIO	J5_66
	ENET_TXD3	O	ENET_TXD3	J5_75
	ENET_TXD2	O	ENET_TXD2	J5_73
	ENET_TXD1	O	ENET_TXD1	J5_71
	ENET_TXD0	O	ENET_TXD0	J5_69
	ENET_TXC	O	ENET_TXC	J5_79
	ENET_TX_CTL	O	ENET_TX_CTL	J5_77
	ENET_RXC	I	ENET_RXC	J5_65
	ENET_RXDV	I	ENET_RX_CTL	J5_84
	ENET_RXD0	I	ENET_RXD0	J5_70
	ENET_RXD1	I	ENET_RXD1	J5_72
	ENET_RXD2	I	ENET_RXD2	J5_74
	ENET_RXD3	I	ENET_RXD3	J5_76

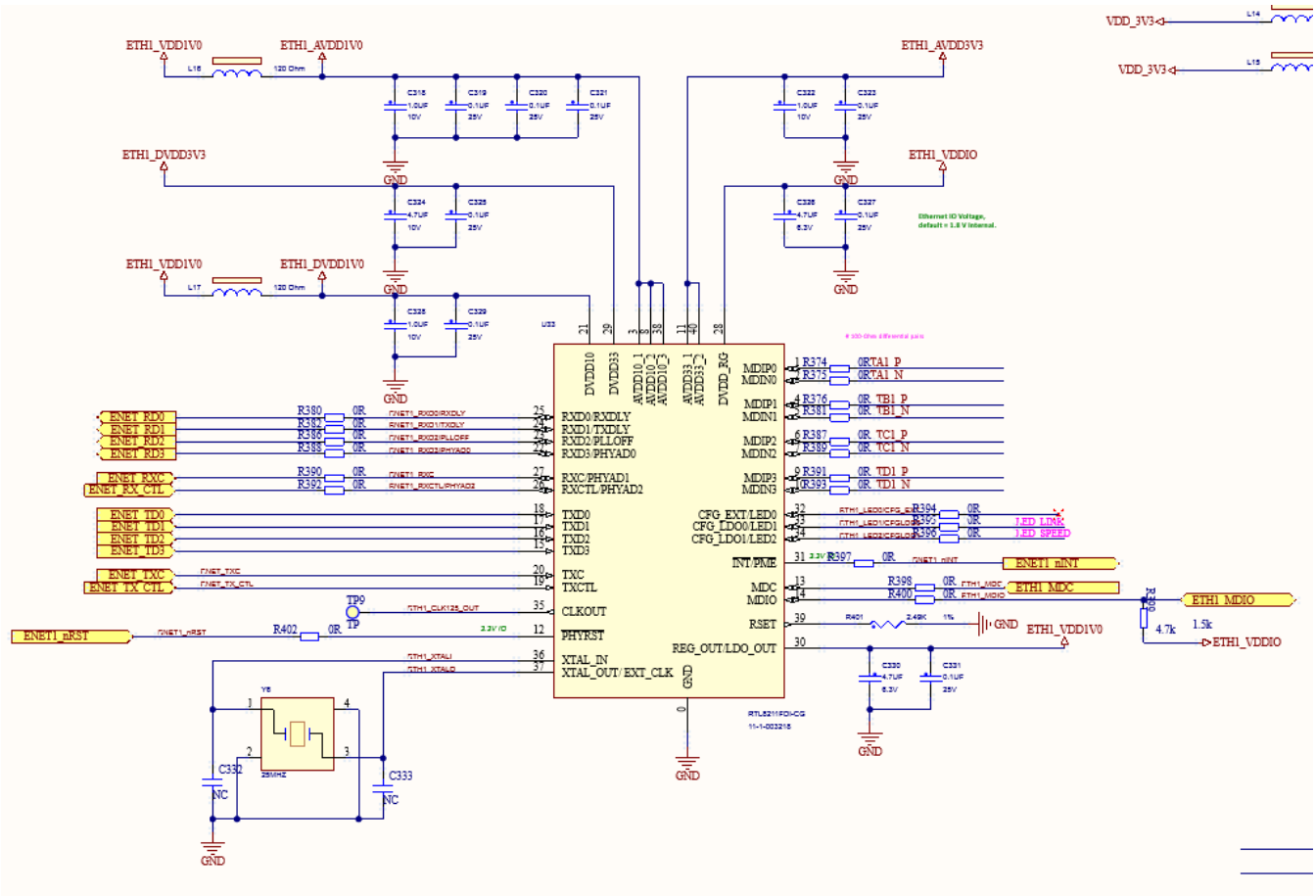

10M/100M/1000M PHY connector

9.8 USB3.0

This X501 module provides two USB3.0 interfaces.

Function	Pin name	I/O	Default	Pin number
USB1	USB1_D_N	I/O	USB1 D-	J3_20
	USB1_D_P	I/O	USB1 D+	J3_22
	USB1_RX_N	I	USB1 RX-	J3_26
	USB1_RX_P	I	USB1 RX+	J3_28
	USB1_TX_N	O	USB1 TX-	J3_32
	USB1_TX_P	O	USB1 TX+	J3_34
	USB1_VBUS	I	3.3V	J3_38
USB2	USB2_D_N	I/O	USB2 D-	J3_23
	USB2_D_P	I/O	USB2 D+	J3_25
	USB2_RX_N	I	USB2 RX-	J3_29
	USB2_RX_P	I	USB2 RX+	J3_31
	USB2_TX_N	O	USB2 TX-	J3_35
	USB2_TX_P	O	USB2 TX+	J3_37
	USB2_VBUS	I	3.3V	J3_19

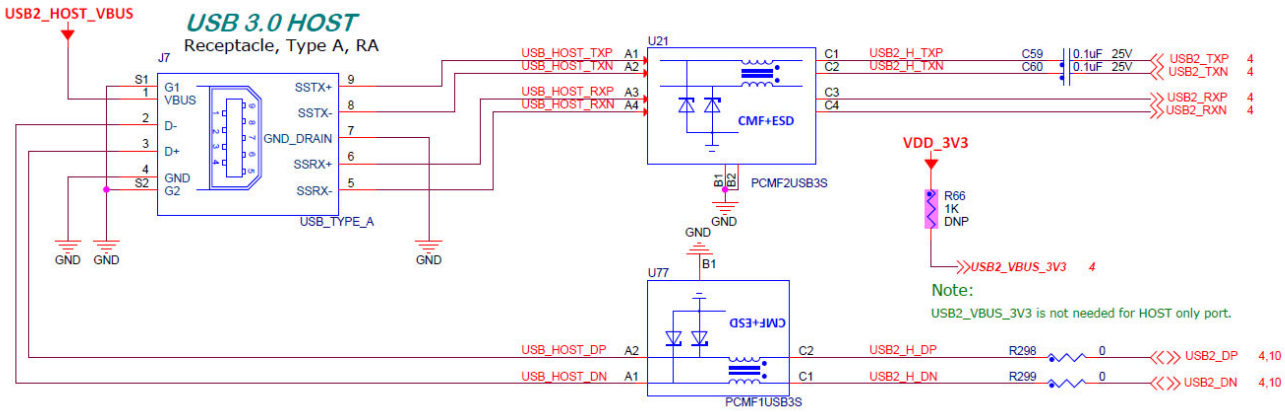

9.9 SDIO

The X501 reserves a set of SDIO interfaces for users, which can be configured for GPIO use if SDIO functionality is not used in your designs.

Function	Pin name	I/O	Default	Pin number
SD2	SD2_WP	I	SD write protect	J4_24
	SD2_nCD	I	SD Plug and pull detection	J4_22
	SD2_DATA1	I/O	SD data 1	J4_30
	SD2_DATA0	I/O	SD data 0	J4_28
	SD2_CLK	0	SD clk	J4_18

	SD2_CMD	0	SD CMD	J4_20
	SD2_DATA3	I/O	SD data 3	J4_34
	SD2_DATA2	I/O	SD data 2	J4_32
	SD2_nRST	O	SD reset	J4_38

9.10 Digital Audio In- and Outputs

The X501 provides three groups of SAI interfaces for users:

SAI1 (8Tx + 8Rx external I2S lanes), SAI3 (1Tx + 1Rx external I2S lanes) SAI5 (4Rx external I2S lanes)

Each lane up to 24.576MHz BCLK (32-bit, 2-ch 384KHz, up to 32-ch TDM); 4Tx + 4Rx support 49.152MHz BCLK for 768KHz

Two SPDIF interface that can provide the user with coaxial or fiber input and output.

9.11 PDM

PDM is a way to transfer a microphone to a processor in a variety of applications, the X501 provides four PDM inputs and a shared clock.

Function	Pin name	I/O	Default	Pin number
PDM	PDM_D3	I	PDM_D3	J5_98
	PDM_D2	I	PDM_D2	J5_93
	PDM_D1	I	PDM_D1	J5_95
	PDM_D0	I	PDM_D0	J5_97
	PDM_CLK	O	PDM_CLK	J5_85

9.12 MIPI

The display and camera subsystem consists of four major blocks: LCDIF, CSI, MIPI CSI and MIPI DSI.
The LCDIF is a simple display controller which has been widely used on i.MX chips. The key features of the display controller include:
- **Support 8-bit / 16-bit / 18-bit / 24-bit / 32-bit pixel depth**
- **Support DOTCLK mode for MIPI-DPI interface**
- **Support resolution up to 1920x1200p60**
- **Support one layer**

This module supports one 4-lane MIPI DSI display with pixels from the LCDIF. The key features of the MIPI DSI (controller and PHY) include:
- **Compliant to MIPI-DSI standard v1.1**
- **Support up to 4 data lanes**
- **Support 80Mbps - 1.5Gbps data rate in high speed operation**
- **Support 10Mbps data rate in low power operation**

The CSI is a simple camera interface. It captures the MIPI CSI input and saves the pixels into memory. The key features of the CSI include:
- **Configurable interface logic to support most commonly available CMOS sensors**
- **8-bit / 16-bit / 24-bit data port for YCbCr, YUV, or RGB data input**
- **Full control of 8-bit/pixel, 10-bit/pixel or 16-bit / pixel data format to 64-bit receive**
- **Support up to 1080p@60fps video capture •**

This module supports two 4-lane MIPI CSI2 camera input. The key features of the MIPI CSI2 (controller and PHY) include:
- **Compliant to MIPI-CSI2 standard**
- **Support up to 4 data lanes**
- **Support 80Mbps - 1.5Gbps data rate in high speed operation**
- **Support 10Mbps data rate in low power operation**
- **Support 4Kp30, 5M pixel at 15 fps, 1080p60, 720p60, VGA at 60 fps**

9.13 LVDS

LVDS Display Bridge is used to connect the LCDIF to External LVDS Display Interface. LDB supports two channels; each channel has following signals:
- **One clock pair**
- **Four data pairs**

Each signal pair contains LVDS special differential pad (PadP, PadM).

9.14 HDMI

HDMI 2.0a Tx supporting one display
- **Resolutions of: 720 x 480p60, 1280 x 720p60, 1920 x 1080p60, 1920 x 1080p120, 3840 x 2160p30**
- **Pixel clock up to 297 MHz**

Audio support
- **32-channel audio output support**
- **1 SPDIF audio eARC input support**

10 Wireless – Wi-Fi /BT module

The AMPAK Technology® AP6275Sis a fully Wi-Fi and Bluetooth functionalities module with seamless roaming capabilities and advance security, also it could interact with different vendors' 802.11a/b/g/n/ac/ax 2x2 Access Points with MIMO standard and can accomplish up to speed of 1200Mbps with dual stream in 802.1axto connect the wireless LAN. Furthermore AP6275S included SDIO interface for Wi-Fi, UART/ PCM interface for Bluetooth.

In addition, this compact module is a total solution for a combination of Wi-Fi + BT technologies. The module is specifically developed for tablet, OTT box and portable devices.

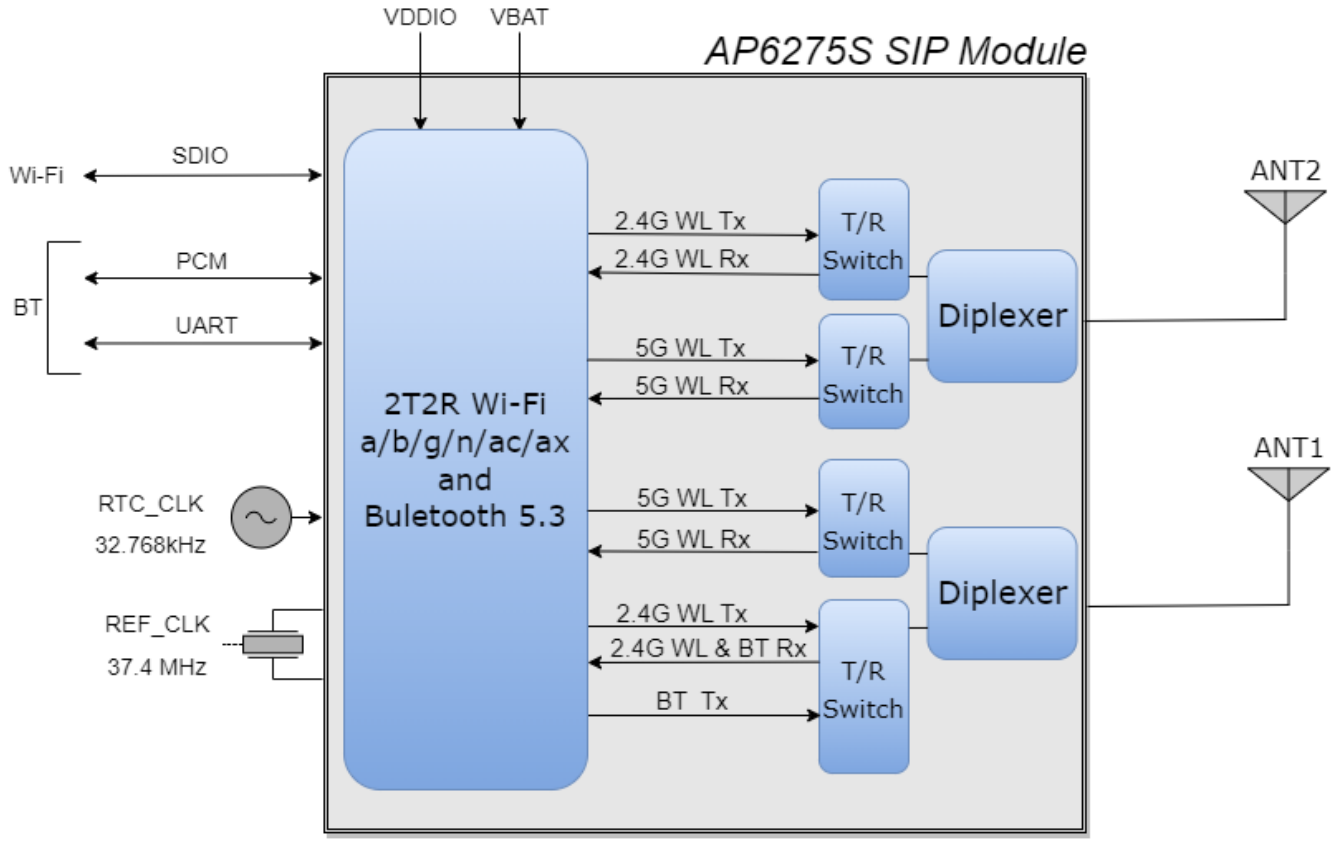

IEEE 802.11 Key Features

- **Lead Free design which is compliant with ROHS requirements.**
- **TX and RX low-density parity check (LDPC) support for improved range and power efficiency.**
- **Dual-stream spatial multiplexing up to 1200 Mbps data rate.**
- **20, 40, 80 MHz channels with optional SGI (1024 QAM modulation)**
- **Client MU-MIMO**
- **Supports standard SDIO v3.0, compatible with SDIO v2.0 HOST interfaces.**

Bluetooth Key Features

- **BT host digital interface:**

- **HCI UART (up to 4 Mbps)**
- **PCM for audio data**

- **Complies with Bluetooth Core Specification Version 5.3 with provisions for supporting future specifications. With Bluetooth Class 1 or Class2 transmitter operation.**
- **Supports extended synchronous connections (eSCO), for enhanced voice quality by allowing for retransmission of dropped packets.**
- **Adaptive frequency hopping (AFH) for reducing radio frequency interference. A simplified block diagram of the module is depicted in the figure above.**

BT Core Specification Version 5.3, including the following support:

- **Low energy(LE) isochronous channels**
- **LE power control**
- **LE enhanced connection update**
- **LE channel classification**
- **LE audio**

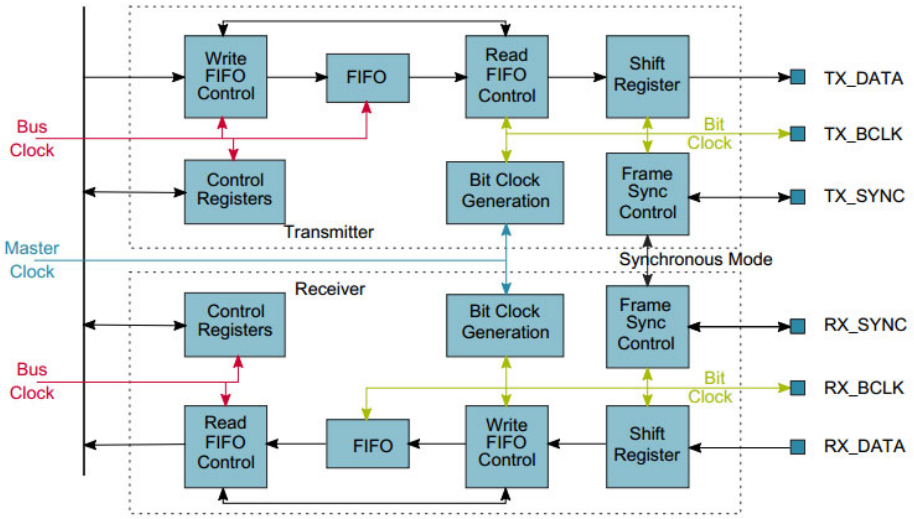

Figure 13-92. I²S/SAI block diagram

10.1 2.4GHz RF Specification

Feature	Description
WLAN Standard	IEEE 802.11 b/g/n/ax & Wi-Fi compliant
Frequency Range	2.400 GHz ~ 2.4835 GHz (2.4GHz ISM Band)
Number of Channels	2.4GHz：Ch1 ~ Ch13
Modulation	802.11b : DQPSK、DBPSK、CCK 802.11g/n : OFDM /64-QAM、16-QAM、QPSK、BPSK 802.11ax : OFDMA /256-QAM、64-QAM、16-QAM、QPSK、BPSK

Output Power , tolerance ± 1.5 dB

The transmit EVM quality & spectrum mask are compliant with IEEE 802.11 standard

802.11b	1Mbps	2Mbps	5.5Mbps	11Mbps	
	19.5	19.5	19.5	19.5	
802.11g	6、9Mbps	12、18Mbps	24Mbps	36Mbps	48Mbps
	19.5	19.5	18.5	18.5	18
	54Mbps				
	18				
802.11n 20MHz	MCS0~2	MCS3	MCS4	MCS5	MCS6
	19.5	18.5	18.5	18	18
	MCS7				
	17.5				
802.11ax 20MHz	HE0~2	HE3	HE4	HE5	HE6
	19.5	18.5	18.5	18	18
	HE7	HE8	HE9		
	17.5	16.5	16.5		

	Dara rate	Tones	Spec.(dBm)	Dara rate	Tones	Spec.(dBm)
802.11ax_20MHz SISO_OFDMA	HE0	26	19	HE6	26	17.5
		52	19		52	17.5
		106	19		106	17.5
		242	19		242	17.5
	HE1~2	26	18.5	HE7	26	17.5
		52	18.5		52	17.5
		106	18.5		106	17.5

		242	18.5		242	17.5
	HE3	26	18	HE8	26	16.5
		52	18		52	16.5
		106	18		106	16.5
		242	18		242	16.5

802.11ax_20MHz SISO_OFDMA	HE4	26	18	HE9	26	16.5
		52	18		52	16.5
		106	18		106	16.5
		242	18		242	16.5
	HE5	26	17.5			
		52	17.5			
		106	17.5			
		242	17.5			

Note: The specifications of RF output power are subject to change to fulfill the safety regulation and requirements in end-user product.

Sensitivity, tolerance ± 2 dB

CCK modulation PER ≦ 8%、OFDM modulation PER ≦ 10%

802.11b	Data Rate	Spec.(dBm)		
	1Mbps	-98		
	2Mbps	-93		
	5.5Mbps	-91		
	11Mbps	-89		
802.11g SISO	Data Rate	Spec.(dBm)	Data Rate	Spec.(dBm)
	6Mbps	-93	24Mbps	-85
	9Mbps	-92	36Mbps	-82
	12Mbps	-91	48Mbps	-78
	18Mbps	-88	54Mbps	-76
802.11g MIMO	Data Rate	Spec.(dBm)	Data Rate	Spec.(dBm)
	6Mbps	-95	24Mbps	-87
	9Mbps	-94	36Mbps	-84
	12Mbps	-93	48Mbps	-81
	18Mbps	-90	54Mbps	-78
802.11n_20MHz SISO	Data Rate	Spec.(dBm)	Data Rate	Spec.(dBm)
	MCS0	-93	MCS4	-81.5
	MCS1	-89	MCS5	-79
	MCS2	-87	MCS6	-76
	MCS3	-84	MCS7	-76

802.11n_20MHz MIMO	Data Rate	Spec.(dBm)	Data Rate	Spec.(dBm)
	MCS0	-93	MCS5	-80
	MCS1	-92	MCS6	-78
	MCS2	-90	MCS7	-76
	MCS3	-87	MCS8	-92.5
	MCS4	-83	MCS15	-75
802.11ax_20MHz SISO	Data Rate	Spec.(dBm)	Data Rate	Spec.(dBm)
	HE0	-93	HE6	-76
	HE1	-89	HE7	-76
	HE2	-87	HE8	-72
	HE3	-84	HE9	-70
	HE4	-81.5		
	HE5	-79		
802.11ax_20MHz MIMO	Data Rate	Spec.(dBm)	Data Rate	Spec.(dBm)
	HE0	-92	HE6	-75
	HE1	-88	HE7	-75
	HE2	-86	HE8	-71
	HE3	-83	HE9	-69
	HE4	-81		
	HE5	-78		
Maximum Input Level	802.11b : -10 dBm			
	802.11g/n/ax : -20 dBm			

10.2 5GHz RF Specification

Feature	Description
WLAN Standard	IEEE 802.11a/n/ac/ax & Wi-Fi compliant
Frequency Range	5.15~5.35GHz、5.47~5.725GHz、5.725~5.85GHz (5GHz UNII Band)
Number of Channels	5.15~5.35GHz：Ch36 ~ Ch64 5.47~5.725GHz：Ch100 ~ Ch144 5.725~5.85GHz：Ch149 ~ Ch165
Modulation	802.11a : OFDM /64-QAM、16-QAM、QPSK、BPSK 802.11n : OFDM /64-QAM、16-QAM、QPSK、BPSK 802.11ac : OFDM /256-QAM、64-QAM、16-QAM、QPSK、BPSK 802.11ax : OFDMA /1024-QAM、256-QAM、64-QAM、16-QAM、QPSK、BPSK

Output Power , tolerance ± 2 dB

The transmit EVM quality & spectrum mask are compliant with IEEE 802.11 standard

802.11a	Frequency (MHz)	6~9Mbps	12~18Mbps	24Mbps	36Mbps
	5150~5350	15.5	15.5	15.5	15.5
	5470~5725	15.5	15.5	15.5	15.5
	5725~5845	15.5	15.5	15.5	15.5
	Frequency (MHz)	48Mbps	54Mbps		
	5150~5350	15.5	15.5		
	5470~5725	15.5	15.5		
	5725~5845	15.5	15.5		
802.11n 20MHz	Frequency (MHz)	MCS0~2	MCS3	MCS4	MCS5
	5150~5350	15.5	15.5	15.5	15.5
	5470~5725	15.5	15.5	15.5	15.5
	5725~5845	15.5	15.5	15.5	15.5
	Frequency (MHz)	MCS6	MCS7		
	5150~5350	15.5	14.5		
	5470~5725	15.5	14.5		
	5725~5845	15.5	14.5		

802.11n 40MHz	Frequency (MHz)	MCS0~2	MCS3	MCS4	MCS5
	5150~5350	15.5	15.5	15.5	15.5
	5470~5725	15	15	15	15
	5725~5845	15	15	15	15
	Frequency (MHz)	MCS6	MCS7		
	5150~5350	15	15		
	5470~5725	14.5	14.5		
	5725~5845	14.5	14.5		
802.11ac 20MHz	Frequency (MHz)	MCS0~2	MCS3	MCS4	MCS5
	5150~5350	15.5	15.5	15.5	15.5
	5470~5725	15.5	15.5	15.5	15.5
	5725~5845	15.5	15.5	15.5	15.5
	Frequency (MHz)	MCS6	MCS7	MCS8	
	5150~5350	15.5	14.5	12.5	
	5470~5725	15.5	14.5	12.5	
	5725~5845	15.5	14.5	12.5	
802.11ac 40MHz	Frequency (MHz)	MCS0~2	MCS3	MCS4	MCS5
	5150~5350	15.5	15.5	15.5	15.5
	5470~5725	15	15	15	15
	5725~5845	15	15	15	15
	Frequency (MHz)	MCS6	MCS7	MCS8	MCS9
	5150~5350	15	15	13.5	11
	5470~5725	14.5	14.5	13	10
	5725~5845	14.5	14.5	13	10
802.11ac 80MHz	Frequency (MHz)	MCS0~2	MCS3	MCS4	MCS5
	5150~5350	15	15	15	15
	5470~5725	15	15	15	15
	5725~5845	15	15	15	15
	Frequency (MHz)	MCS6	MCS7	MCS8	MCS9
	5150~5350	14.5	14.5	11	11
	5470~5725	14.5	14.5	10	10
	5725~5845	14.5	14.5	10	10
802.11ax 20MHz	Frequency (MHz)	HE0~2	HE3	HE4	HE5
	5150~5350	15.5	15.5	15.5	15.5
	5470~5725	15.5	15.5	15.5	15.5
	5725~5845	15.5	15.5	15.5	15.5

802.11ax 20MHz	Frequency (MHz)	HE6	HE7	HE8	HE9
	5150~5350	15.5	14.5	12.5	12.5
	5470~5725	15.5	14.5	12.5	12.5
	5725~5845	15.5	14.5	12.5	12.5
	Frequency (MHz)	HE10	HE11		
	5150~5350	10.5	10.5		
	5470~5725	10	10		
	5725~5845	10	10		
802.11ax 40MHz	Frequency (MHz)	HE0~2	HE3	HE4	HE5
	5150~5350	15.5	15.5	15.5	15.5
	5470~5725	15	15	15	15
	5725~5845	15	15	15	15
	Frequency (MHz)	HE6	HE7	HE8	HE9
	5150~5350	15	15	13.5	11
	5470~5725	14.5	14.5	13	10
	5725~5845	14.5	14.5	13	10
	Frequency (MHz)	HE10	HE11		
	5150~5350	9	9		
	5470~5725	8	8		
	5725~5845	8	8		
802.11ax 80MHz	Frequency (MHz)	HE0~2	HE3	HE4	HE5
	5150~5350	15	15	15	15
	5470~5725	15	15	15	15
	5725~5845	15	15	15	15
	Frequency (MHz)	HE6	HE7	HE8	HE9
	5150~5350	14.5	14.5	11	11
	5470~5725	14.5	14.5	10	10
	5725~5845	14.5	14.5	10	10
	Frequency (MHz)	HE10	HE11		
	5150~5350	9	9		
	5470~5725	9	9		
	5725~5845	9	9		

Note: The specifications of RF output power are subject to change to fulfill the safety regulation and requirements in end-user product.

	Dara rate	Tones	Frequency	Spec.(dBm)
802.11ax_20MHz SISO_OFDMA	HE0	26	5150~5350	15.5
			5470~5725	15.5
			5725~5845	15.5
		52	5150~5350	15.5
			5470~5725	15.5
			5725~5845	15.5
		106	5150~5350	15.5
			5470~5725	15.5
			5725~5845	15.5
		242	5150~5350	14.5
			5470~5725	14
			5725~5845	14
	HE1~2	26	5150~5350	15.5
			5470~5725	15.5
			5725~5845	15.5
		52	5150~5350	15.5
			5470~5725	15.5
			5725~5845	15.5
		106	5150~5350	15.5
			5470~5725	15.5
			5725~5845	15.5
		242	5150~5350	14.5
			5470~5725	14
			5725~5845	14
	HE3~4	26	5150~5350	15.5
			5470~5725	15.5
			5725~5845	15.5
		52	5150~5350	15.5
			5470~5725	15.5
			5725~5845	15.5
		106	5150~5350	15.5
			5470~5725	15.5
			5725~5845	15.5
		242	5150~5350	14.5
			5470~5725	14
			5725~5845	14

	HE5~7	26	5150~5350	14.5
			5470~5725	14.5
			5725~5845	14.5
		52	5150~5350	14.5
			5470~5725	14.5
			5725~5845	14.5
		106	5150~5350	14.5
			5470~5725	14.5
			5725~5845	14.5
		242	5150~5350	14.5
			5470~5725	14
			5725~5845	14
	HE8~9	26	5150~5350	12.5
			5470~5725	12.5
			5725~5845	12.5
		52	5150~5350	12.5
			5470~5725	12.5
			5725~5845	12.5
		106	5150~5350	12.5
			5470~5725	12.5
			5725~5845	12.5
		242	5150~5350	12.5
			5470~5725	12.5
			5725~5845	12.5
	HE10~11	242	5150~5350	10
			5470~5725	9.5
			5725~5845	9.5

	Dara rate	Tones	Frequency	Spec.(dBm)
802.11ax_40MHz SISO_OFDMA	HE0	26	5150~5350	15.5
			5470~5725	15
			5725~5845	15
		52	5150~5350	15.5
			5470~5725	15
			5725~5845	15
		106	5150~5350	15.5
			5470~5725	15
			5725~5845	15
		242	5150~5350	15.5
			5470~5725	15
			5725~5845	15
		484	5150~5350	14.5
			5470~5725	14.5
			5725~5845	14.5
	HE1~2	26	5150~5350	15.5
			5470~5725	15
			5725~5845	15
		52	5150~5350	15.5
			5470~5725	15
			5725~5845	15
		106	5150~5350	15.5
			5470~5725	15
			5725~5845	15
		242	5150~5350	15.5
			5470~5725	15
			5725~5845	15
		484	5150~5350	14.5
			5470~5725	14.5
			5725~5845	14.5

	HE3~4	26	5150~5350	15.5
			5470~5725	15
			5725~5845	15
		52	5150~5350	15.5
			5470~5725	15
			5725~5845	15
		106	5150~5350	15.5
			5470~5725	15
			5725~5845	15
		242	5150~5350	15.5
			5470~5725	15
			5725~5845	15
		484	5150~5350	14.5
			5470~5725	14.5
			5725~5845	14.5
	HE5~7	26	5150~5350	15.5
			5470~5725	15
			5725~5845	15
		52	5150~5350	15.5
			5470~5725	15
			5725~5845	15
		106	5150~5350	15.5
			5470~5725	15
			5725~5845	15
		242	5150~5350	15.5
			5470~5725	15
			5725~5845	15
		484	5150~5350	14.5
			5470~5725	14.5
			5725~5845	14.5
	HE8~9	26	5150~5350	12
			5470~5725	12
			5725~5845	12
		52	5150~5350	12
			5470~5725	12
			5725~5845	12
		106	5150~5350	12

			5470~5725	12
			5725~5845	12
		242	5150~5350	12
			5470~5725	12
			5725~5845	12
		484	5150~5350	12
			5470~5725	12
			5725~5845	12
	HE10~11	242	5150~5350	10.5
			5470~5725	10
			5725~5845	10
		484	5150~5350	9.5
			5470~5725	9
			5725~5845	9

	Dara rate	Tones	Frequency	Spec.(dBm)
802.11ax_80MHz SISO_OFDMA	HE0	26	5150~5350	15.5
			5470~5725	15
			5725~5845	15
		52	5150~5350	15.5
			5470~5725	15
			5725~5845	15
		106	5150~5350	15.5
			5470~5725	15
			5725~5845	15
		242	5150~5350	15.5
			5470~5725	15
			5725~5845	15
		484	5150~5350	15.5
			5470~5725	15
			5725~5845	15
		996	5150~5350	15.5
			5470~5725	15
			5725~5845	15
	HE1~2	26	5150~5350	15.5
			5470~5725	15
			5725~5845	15
		52	5150~5350	15.5
			5470~5725	15
			5725~5845	15
		106	5150~5350	15.5
			5470~5725	15
			5725~5845	15
		242	5150~5350	15.5
			5470~5725	15
			5725~5845	15
		484	5150~5350	15.5
			5470~5725	15
			5725~5845	15
		996	5150~5350	15.5
			5470~5725	15
			5725~5845	15

	HE3~4	26	5150~5350	15.5
			5470~5725	15
			5725~5845	15
		52	5150~5350	15.5
			5470~5725	15
			5725~5845	15
		106	5150~5350	15.5
			5470~5725	15
			5725~5845	15
		242	5150~5350	15.5
			5470~5725	15
			5725~5845	15
		484	5150~5350	15.5
			5470~5725	15
			5725~5845	15
		996	5150~5350	15.5
			5470~5725	15
			5725~5845	15
	HE5~7	26	5150~5350	15.5
			5470~5725	15
			5725~5845	15
		52	5150~5350	15.5
			5470~5725	15
			5725~5845	15
		106	5150~5350	15.5
			5470~5725	15
			5725~5845	15
		242	5150~5350	15.5
			5470~5725	15
			5725~5845	15
		484	5150~5350	15.5
			5470~5725	15
			5725~5845	15
		996	5150~5350	14.5
			5470~5725	14.5
			5725~5845	14.5

	HE8~9	26	5150~5350	12.5
			5470~5725	12.5
			5725~5845	12.5
		52	5150~5350	12.5
			5470~5725	12.5
			5725~5845	12.5
		106	5150~5350	12.5
			5470~5725	12.5
			5725~5845	12.5
		242	5150~5350	12
			5470~5725	12
			5725~5845	12
		484	5150~5350	12
			5470~5725	12
			5725~5845	12
		996	5150~5350	12
			5470~5725	12
			5725~5845	12
	HE10~11	242	5150~5350	10
			5470~5725	9.5
			5725~5845	9.5
		484	5150~5350	10
			5470~5725	9.5
			5725~5845	9.5
		996	5150~5350	9
			5470~5725	9
			5725~5845	9

Sensitivity, tolerance ± 1.5 dB CCK modulation PER ≦ 8%、OFDM modulation PER ≦ 10%				
802.11a SISO	Data Rate	Spec.(dBm)	Data Rate	Spec.(dBm)
	6Mbps	-90.5	24Mbps	-83
	9Mbps	-90	36Mbps	-80
	12Mbps	-88	48Mbps	-75
	18Mbps	-86	54Mbps	-73
802.11a MIMO	Data Rate	Spec.(dBm)	Data Rate	Spec.(dBm)
	6Mbps	-92	24Mbps	-86
	9Mbps	-91	36Mbps	-83
	12Mbps	-90	48Mbps	-78
	18Mbps	-89	54Mbps	-77
802.11n_20MHz SISO	Data Rate	Spec.(dBm)	Data Rate	Spec.(dBm)
	MCS0	-90	MCS4	-79
	MCS1	-88	MCS5	-76
	MCS2	-86	MCS6	-73
	MCS3	-83	MCS7	-72
802.11n_20MHz MIMO	Data Rate	Spec.(dBm)	Data Rate	Spec.(dBm)
	MCS0	-92	MCS5	-78
	MCS1	-91	MCS6	-76
	MCS2	-89	MCS7	-75
	MCS3	-86	MCS8	-90
	MCS4	-82	MCS15	-71
802.11n_40MHz SISO	Data Rate	Spec.(dBm)	Data Rate	Spec.(dBm)
	MCS0	-88	MCS4	-77
	MCS1	-86	MCS5	-72
	MCS2	-83	MCS6	-70
	MCS3	-80	MCS7	-69
802.11n_40MHz MIMO	Data Rate	Spec.(dBm)	Data Rate	Spec.(dBm)
	MCS0	-88	MCS5	-75
	MCS1	-88	MCS6	-73
	MCS2	-86	MCS7	-72
	MCS3	-83	MCS8	-87
	MCS4	-79	MCS15	-68

802.11ac_20MHz SISO	Data Rate	Spec.(dBm)	Data Rate	Spec.(dBm)
	MCS0	-90	MCS5	-75
	MCS1	-88	MCS6	-73
	MCS2	-86	MCS7	-70
	MCS3	-83	MCS8	-68
	MCS4	-79		
802.11ac_20MHz MIMO	Data Rate	Spec.(dBm)	Data Rate	Spec.(dBm)
	MCS0,NSS=1	-92	MCS6,NSS=1	-76
	MCS1,NSS=1	-91	MCS7,NSS=1	-75
	MCS2,NSS=1	-88	MCS8,NSS=1	-72
	MCS3,NSS=1	-85	MCS0,NSS=2	-89
	MCS4,NSS=1	-82	MCS8,NSS=2	-67
	MCS5,NSS=1	-77		
802.11ac_40MHz SISO	Data Rate	Spec.(dBm)	Data Rate	Spec.(dBm)
	MCS0	-88	MCS5	-72
	MCS1	-86	MCS6	-70
	MCS2	-83	MCS7	-69
	MCS3	-80	MCS8	-65
	MCS4	-76	MCS9	-64
802.11ac_40MHz MIMO	Data Rate	Spec.(dBm)	Data Rate	Spec.(dBm)
	MCS0,NSS=1	-90	MCS6,NSS=1	-73
	MCS1,NSS=1	-88	MCS7,NSS=1	-72
	MCS2,NSS=1	-86	MCS8,NSS=1	-68
	MCS3,NSS=1	-82	MCS9,NSS=1	-66
	MCS4,NSS=1	-79	MCS0,NSS=2	-87
	MCS5,NSS=1	-77	MCS9,NSS=2	-63
802.11ac_80MHz SISO	Data Rate	Spec.(dBm)	Data Rate	Spec.(dBm)
	MCS0	-85	MCS5	-68
	MCS1	-82	MCS6	-67
	MCS2	-79	MCS7	-65
	MCS3	-76	MCS8	-62
	MCS4	-73	MCS9	-61

802.11ac_80MHz MIMO	Data Rate	Spec.(dBm)	Data Rate	Spec.(dBm)
	MCS0,NSS=1	-87	MCS6,NSS=1	-70
	MCS1,NSS=1	-85	MCS7,NSS=1	-68
	MCS2,NSS=1	-82	MCS8,NSS=1	-66
	MCS3,NSS=1	-79	MCS9,NSS=1	-63
	MCS4,NSS=1	-76	MCS0,NSS=2	-84
	MCS5,NSS=1	-71	MCS9,NSS=2	-60
802.11ax_20MHz SISO	Data Rate	Spec.(dBm)	Data Rate	Spec.(dBm)
	HE0	-90	HE6	-73
	HE1	-88	HE7	-70
	HE2	-86	HE8	-68
	HE3	-83	HE9	-64
	HE4	-79	HE10	-59
	HE5	-75	HE11	-57
802.11ax_20MHz MIMO	Data Rate	Spec.(dBm)	Data Rate	Spec.(dBm)
	HE0	-90	HE6	-73
	HE1	-88	HE7	-70
	HE2	-86	HE8	-68
	HE3	-83	HE9	-64
	HE4	-79	HE10	-59
	HE5	-75	HE11	-56
802.11ax_40MHz SISO	Data Rate	Spec.(dBm)	Data Rate	Spec.(dBm)
	HE0	-88	HE6	-70
	HE1	-86	HE7	-69
	HE2	-83	HE8	-65
	HE3	-80	HE9	-64
	HE4	-76	HE10	-60
	HE5	-72	HE11	-55
802.11ax_40MHz MIMO	Data Rate	Spec.(dBm)	Data Rate	Spec.(dBm)
	HE0	-87	HE6	-70
	HE1	-86	HE7	-69
	HE2	-83	HE8	-65
	HE3	-80	HE9	-64
	HE4	-76	HE10	-60
	HE5	-72	HE11	-55

802.11ax_80MHz SISO	Data Rate	Spec.(dBm)	Data Rate	Spec.(dBm)
	HE0	-85	HE6	-67
	HE1	-82	HE7	-65
	HE2	-79	HE8	-62
	HE3	-76	HE9	-61
	HE4	-73	HE10	-57
	HE5	-68	HE11	-53
802.11ax_80MHz MIMO	Data Rate	Spec.(dBm)	Data Rate	Spec.(dBm)
	HE0	-84	HE6	-67
	HE1	-82	HE7	-65
	HE2	-79	HE8	-62
	HE3	-76	HE9	-61
	HE4	-73	HE10	-57
	HE5	-68	HE11	-52
Maximum Input Level	802.11a/n/ac/ax : -30 dBm			

10.3 5GHz Channel table

Band (GHz)	Operating Channel Numbers	Channel center frequencies(MHz)
5.15GHz~5.25GHz	36	5180
	40	5200
	44	5220
	48	5240
5.25GHz~5.35GHz	52	5260
	56	5280
	60	5300
	64	5320
5.5GHz~5.7GHz	100	5500
	104	5520
	108	5540
	112	5560
	116	5580
	120	5600
	124	5620
	128	5640
	132	5660
	136	5680
	140	5700
5.725GHz~5.825GHz	149	5745
	153	5765
	157	5785
	161	5805
	165	5825

10.4 Bluetooth Specification

Feature	Description
General Specification	
Bluetooth Standard	BDR、EDR(2Mbps & 3Mbps)、LE(1/2Mbps)、LELR(128/512Kbps)
Host Interface	UART
Frequency Band	2402 MHz ~ 2480 MHz
Number of Channels	79 channels for classic、40 channels for BLE
Modulation	GFSK, π/4-DQPSK, 8DPSK
RF Specification	
Output Power , tolerance ± 1.5 dB	
	CL1 (dBm)
BDR Output Power	8
EDR Output Power	6
BLE Output Power	7
Sensitivity, tolerance ± 1.5 dB	
Sensitivity @ BER=0.1% for GFSK (1Mbps)	-88 dBm
Sensitivity @ BER=0.01% for π/4-DQPSK (2Mbps)	-91 dBm
Sensitivity @ BER=0.01% for 8DPSK (3Mbps)	-85 dBm
Sensitivity @ PER=30.8% for LE (1Mbps)	-90 dBm
Sensitivity @ PER=30.8% for 2LE (2Mbps)	-91dBm
Maximum Input Level	GFSK (1Mbps):-20dBm
	π/4-DQPSK (2Mbps) :-20dBm
	8DPSK (3Mbps) :-20dBm

Note*：The Bluetooth BDR output power is able to be configured by firmware (hcd file).

11 Software profile

11.1 Network setup

Default settings: DHCP enabled
Ethernet: Plug and auto obtain IP address
Wi-Fi: Stand alone mode (Web page or App), WPS mode, BLE easy setup (App), Uart interface configuration
Bluetooth: easy pairing and Pin code pairing

11.2 APP

Speaker Player and controller.

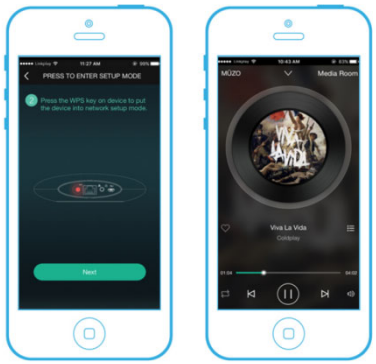

Steaming services from Internet

MUSIC SERVICES & PROTOCOLS IN-APP

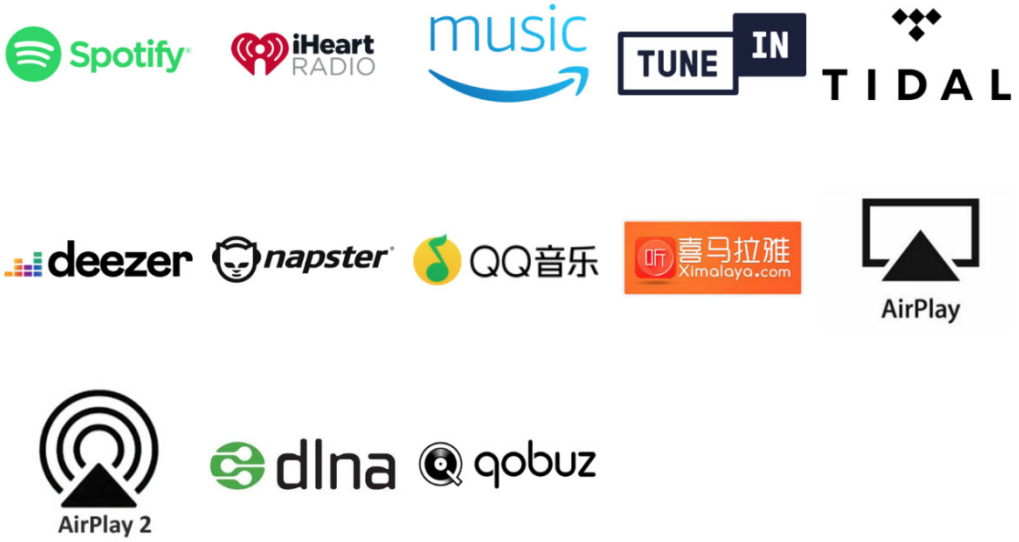

MUSIC SERVICES IN AMAZON ALEXA

Matrix setup (example)

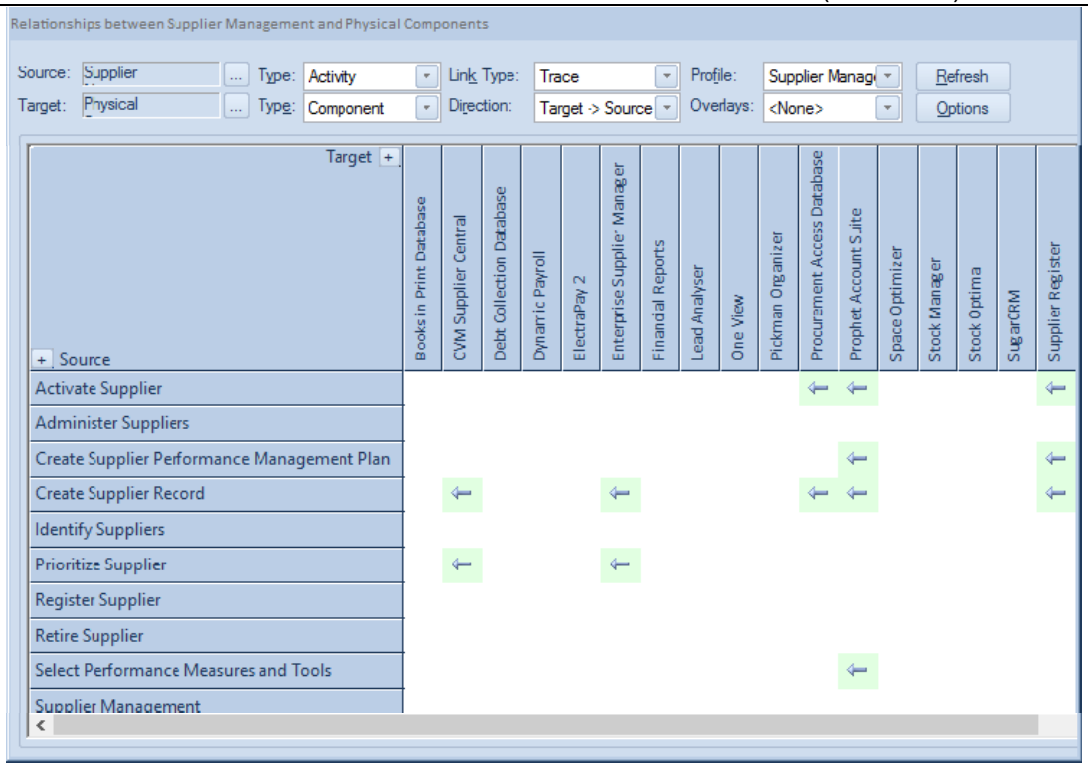

12 Cloud skills

Hansong Cloud Service provides secure, stable, and fast cloud services to customers worldwide.

The Hansong Cloud is built on Amazon Web Services (AWS). This provides you with the most secure, feature rich, scalable cloud services from storage, security and database services and machines learning and more.

- **IoT Cloud Real-time MQTT messaging**
- **Alexa skills**
- **Homekit skills**
- **User and device management**
- **Data analytics (device activation rate, daily active user, user behavior analysis, etc.)**
- **Data security**
- **IoT SDK**

13 Safety and Approbations

<u>D&MPSS need to deliver following to Denon:</u>

- Safety: According Mandatory standard: PSE standard; Standard: J60065 (H20 电安 2), <u>No Certificate.</u>
- EMC: Mandatory standard: CISPR 13 (J55013) (only for EMI part)
- EMC testreport external testhouse
- CB-report Japan deviation
- (Audyssey Certification) / under investigation

14 Certification

Wi-Fi cert
Bluetooth BQB cert

15 Environmental Requirements

Operating on SPEC	Range	Unit	condition
Temperature	0 / + 70	°C	Working within Specification
Humidity	40	%	

16 Storage

The calculated shelf life in a sealed bag is 12 months if stored between 0°C and 70˚C at less than 90% relative humidity (RH). After the bag is opened, devices that are subjected to solder reflow or other high temperature processes must be handled in the following manner:

Mounted within 168 hours in factory conditions, i.e. <30°C at 60% RH.
Storage humidity needs to maintained at <10%RH.
Baking is necessary if the customer exposes the component to air for over 168 hrs.
- Baking conditions: 125℃ for 8hrs.

17 Software System Structure

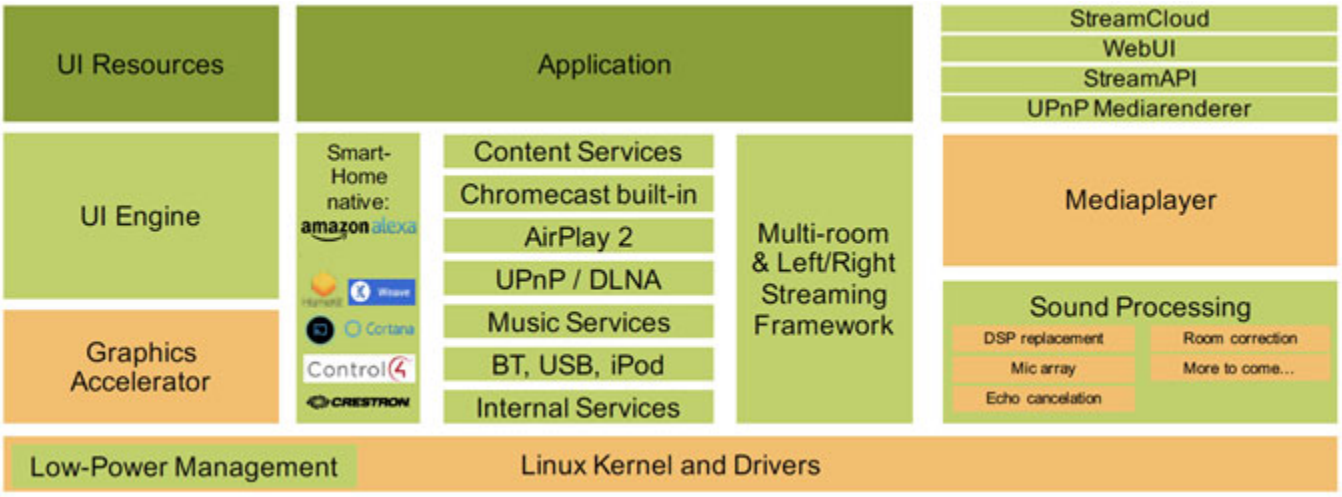

More…

SW Block Diagram

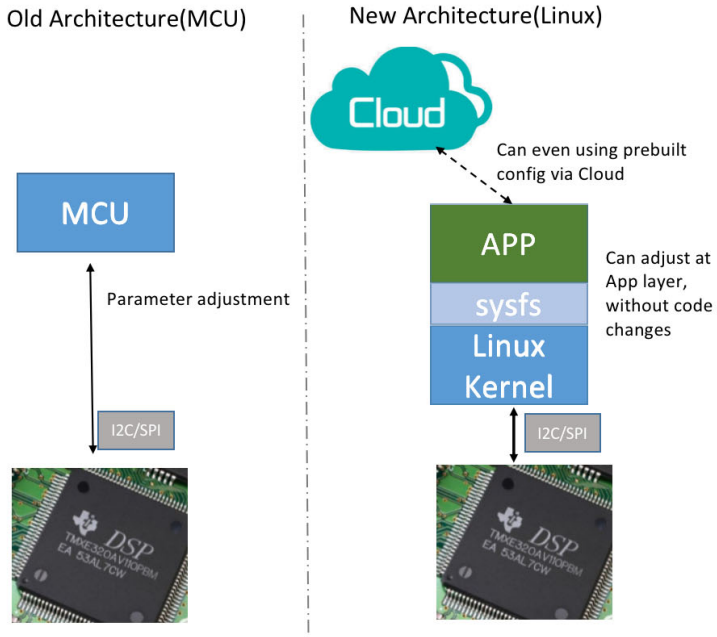

MCU	Linux
Each adjustment requires code changes and code-compiling	No code change or compiler needed
Need compiling the code and flash to MCU to take effect	More flexible and powerful than MCU

Note - Snap5.1 Project already used the new arch design – control DSP via Linux

FCC MODULAR APPROVAL INFORMATION EXAMPLES for Manual

18 Appendixes

TBD

FCC MODULAR APPROVAL INFORMATION EXAMPLES for Manual

OEM INTEGRATION INSTRUCTIONS:

This device is intended only for OEM integrators under the following conditions:

The module must be installed in the host equipment such that 20 cm is maintained between the antenna and users, and the transmitter module may not be co-located with any other transmitter or antenna. The module shall be only used with the internal on-board antenna that has been originally tested and certified with this module. External antennas are not supported. As long as these 3 conditions above are met, further transmitter test will not be required.

However, the OEM integrator is still responsible for testing their end-product for any additional compliance requirements required with this module installed (for example, digital device emissions, PC peripheral requirements, etc.). The end-product may need Verification testing, Declaration of Conformity testing, a Permissive Class II Change or new Certification. Please involve a FCC certification specialist in order to determine what will be exactly applicable for the end-product.

Validity of using the module certification:

In the event that these conditions cannot be met (for example certain laptop configurations or co-location with another transmitter), then the FCC authorization for this module in combination with the host equipment is no longer considered valid and the FCC ID of the module cannot be used on the final product. In these circumstances, the OEM integrator will be responsible for re-evaluating the end product (including the transmitter) and obtaining a separate FCC authorization. In such cases, please involve a FCC certification specialist in order to determine if a Permissive Class II Change or new Certification is required.

Upgrade Firmware:

The software provided for firmware upgrade will not be capable to affect any RF parameters as certified for the FCC for this module, in order to prevent compliance issues.

End product labeling:

This transmitter module is authorized only for use in device where the antenna may be installed such that 20 cm may be maintained between the antenna and users. The final end product must be labeled in a visible area with the following: “Contains FCC ID:XCO-X501”.

Information that must be placed in the end user manual:

The OEM integrator has to be aware not to provide information to the end user regarding how to install or remove this RF module in the user's manual of the end product which integrates this module. The end user manual shall include all required regulatory information/warning as show in this manual.

FCC MODULAR APPROVAL INFORMATION EXAMPLES for Manual

This device complies with Part 15 of the FCC Rules. Operation is subject to the following two conditions:

(1) This device may not cause harmful interference.
(2) This device must accept any interference received, including interference that may cause undesired operation.

CAUTION: Changes or modifications not expressly approved by the party responsible for compliance could void the user's authority to operate the equipment.

NOTE: This equipment has been tested and found to comply with the limits for a Class B digital device, pursuant to Part 15 of the FCC Rules. These limits are designed to provide reasonable protection against harmful interference in a residential installation. This equipment generates uses and can radiate radio frequency energy and, if not installed and used in accordance with the instructions, may cause harmful interference to radio communications. However, there is no guarantee that interference will not occur in a particular installation. If this equipment does cause harmful interference to radio or television reception, which can be determined by turning the equipment off and on, the user is encouraged to try to correct the interference by one or more of the following measures:

- Reorient or relocate the receiving antenna.
- Increase the separation between the equipment and receiver.
- Connect the equipment into an outlet on a circuit different from that to which the receiver is connected.
-Consult the dealer or an experienced radio/TV technician for help.

WARNING

Changes or modifications not expressly approved by the manufacturer could void the user' s authority to operate the equipment.

"CAUTION : Exposure to Radio Frequency Radiation.
Antenna shall be mounted in such a manner to minimize the potential for human contact during normal operation. The antenna should not be contacted during operation to avoid the possibility of exceeding the FCC radio frequency exposure limit.

FCC Radiation Exposure Statement:

This equipment complies with FCC radiation exposure limits set forth for an uncontrolled environment. This equipment should be installed and operated with minimum distance 20cm between the radiator & your body.

IC Information

This device complies with Industry Canada license-exempt RSS standard(s). Operation is subject to the following two conditions:

(1) this device may not cause interference, and

(2) this device must accept any interference, including interference that may cause undesired operation of the device.

Cet appareil est conforme avec Industrie Canada exempts de licence standard RSS (s). L'operation est soumise aux deux conditions suivantes:

(1) cet appareil ne peut causer d'interferences, et

(2) cet appareil doit accepter toute interference, y compris les interferences qui peuvent causer un mauvais fonctionnement de l'appareil.

The end product must be labeled to display the Industry Canada certification number of the module. Contains transmitter moduleIC:7756A-X501

Le dispositif d'accueil doivent etre etiquetes pour afficher le numero de certification d'Industrie Canada du module. Contient module emetteurIC:7756A-X501

*** This device is going to be operated in 5 150 MHz ~ 5 250 MHz frequency range, it is restricted in indoor environment only.**

Information for OEM Integrator

This device is intended only for OEM integrators under the following conditions:

1) The antenna must be installed such that 20 cm is maintained between the antenna and users, and
2) The transmitter module may not be co-located with any other transmitter or antenna.

End product labelling

The label for end product must include

“Contains FCC ID:XCO-X501, Contains IC:7756A-X501”.

“CAUTION: Exposure to Radio Frequency Radiation.

This equipment complies with FCC radiation exposure limits set forth for an uncontrolled environment. This equipment should be installed and operated with minimum distance of 20cm between the radiator and your body. This transmitter module is authorized only for use in device where the antenna may be installed such that 20 cm may be maintained between the antenna and users."

Requirement per KDB996369 D03

2.2 List of applicable FCC rules

List the FCC rules that are applicable to the modular transmitter. These are the rules that specifically establish the bands of operation, the power, spurious emissions, and operating fundamental frequencies. DO NOT list compliance to unintentional-radiator rules (Part 15 Subpart B) since that is not a condition of a module grant that is extended to a host manufacturer. See also Section 2.10 below concerning the need to notify host manufacturers that further testing is required.3

Explanation: This module meets the requirements of FCC part 15C(15.247). part 15E(15.407)

2.3 Summarize the specific operational use conditions

Describe use conditions that are applicable to the modular transmitter, including for example any limits on antennas, etc. For example, if point-to-point antennas are used that require reduction in power or compensation for cable loss, then this information must be in the instructions. If the use condition limitations extend to professional users, then instructions must state that this information also extends to the host manufacturer' s instruction manual. In addition, certain information may also be needed, such as peak gain per frequency band and minimum gain, specifically for master devices in
5 GHz DFS bands.

Explanation: The EUT has a PCB Antenna and a Dipole Antenna, and the antenna use a permanently attached antenna which is not replaceable.

2.4 Limited module procedures

If a modular transmitter is approved as a "limited module," then the module manufacturer is responsible for approving the host environment that the limited module is used with. The manufacturer of a limited module must describe, both in the filing and in the installation instructions, the alternative means that the limited module manufacturer uses to verify that the host meets the necessary requirements to satisfy the module limiting conditions.

A limited module manufacturer has the flexibility to define its alternative method to address the conditions that limit the initial approval, such as: shielding, minimum signaling amplitude, buffered modulation/data inputs, or power supply regulation. The alternative method could include that the limited module manufacturer reviews detailed test data or host designs prior to giving the host manufacturer approval.

This limited module procedure is also applicable for RF exposure evaluation when it is necessary to demonstrate compliance in a specific host. The module manufacturer must state how control of the product into which the modular transmitter will be installed will be maintained such that full compliance of the product is always ensured. For additional hosts other than the specific host originally granted with a limited module, a Class II permissive change is required on the module grant to register the additional host as a specific host also approved with the module.

Explanation: The module is not a limited module.

2.5 Trace antenna designs

For a modular transmitter with trace antenna designs, see the guidance in Question 11 of KDB Publication 996369 D02 FAQ – Modules for Micro-Strip Antennas and traces. The integration information shall include for the TCB review the

integration instructions for the following aspects: layout of trace design, parts list (BOM), antenna, connectors, and isolation requirements.

a) Information that includes permitted variances (e.g., trace boundary limits, thickness, length, width, shape(s), dielectric constant, and impedance as applicable for each type of antenna);

b) Each design shall be considered a different type (e.g., antenna length in multiple(s) of frequency, the wavelength, and antenna shape (traces in phase) can affect antenna gain and must be considered);

c) The parameters shall be provided in a manner permitting host manufacturers to design the printed circuit (PC) board layout;

d) Appropriate parts by manufacturer and specifications;

e) Test procedures for design verification; and

f) Production test procedures for ensuring compliance.

The module grantee shall provide a notice that any deviation(s) from the defined parameters of the antenna trace, as described by the instructions, require that the host product manufacturer must notify the module grantee that they wish to change the antenna trace design. In this case, a Class II permissive change application is required to be filed by the grantee, or the host manufacturer can take responsibility through the change in FCC ID (new application) procedure followed by a Class II permissive change application.

Explanation: Yes, The module with trace antenna designs, and This manual has been shown the layout of trace design, antenna, connectors, and isolation requirements.

2.6 RF exposure considerations

It is essential for module grantees to clearly and explicitly state the RF exposure conditions that permit a host product manufacturer to use the module. Two types of instructions are required for RF exposure information: (1) to the host product manufacturer, to define the application conditions (mobile, portable – xx cm from a person's body); and (2) additional text needed for the host product manufacturer to provide to end users in their end-product manuals. If RF exposure statements and use conditions are not provided, then the host product manufacturer is required to take responsibility of the module through a change in FCC ID (new application).

Explanation: This module complies with FCC RF radiation exposure limits set forth for an uncontrolled environment, This equipment should be installed and operated with a minimum distance of 20 centimeters between the radiator and your body." This module is designed to comply with the FCC statement, FCC ID is: XCO-X501.

2.7 Antennas

A list of antennas included in the application for certification must be provided in the instructions. For modular transmitters approved as limited modules, all applicable professional installer instructions must be included as part of the information to the host product manufacturer. The antenna list shall also identify the antenna types (monopole, PIFA, dipole, etc. (note that for example an “omni-directional antenna” is not considered to be a specific “antenna type”)).

For situations where the host product manufacturer is responsible for an external connector, for example with an RF pin and antenna trace design, the integration instructions shall inform the installer that unique antenna connector must be used on the Part 15 authorized transmitters used in the host product. The module manufacturers shall provide a list of acceptable unique connectors.

Explanation: The EUT has a PCB Antenna and a Dipole Antenna, and the antenna use a permanently attached antenna which is unique.

Frequency range	Manufacturer	Peak gain (dBi)	Antenna type
2400-2483.5MHz	Suzhou Point Positive Electronic Technology Co.,ltd	4.14	PCB antenna
5150-5250MHz	Suzhou Point Positive Electronic Technology Co.,ltd	5.07	PCB antenna
5250-5350MHz	Suzhou Point Positive Electronic Technology Co.,ltd	5.07	PCB antenna
5470-5725MHz	Suzhou Point Positive Electronic Technology Co.,ltd	5.16	PCB antenna
5725-5850MHz	Suzhou Point Positive Electronic Technology Co.,ltd	4.99	PCB antenna
Frequency range	Manufacturer	Peak gain (dBi)	Antenna type
2400-2483.5MHz	Suzhou Point Positive Electronic Technology Co.,ltd	2.94	Dipole Antenna
5150-5250MHz	Suzhou Point Positive Electronic Technology Co.,ltd	3.6	Dipole Antenna
5250-5350MHz	Suzhou Point Positive Electronic Technology Co.,ltd	3.6	Dipole Antenna
5470-5725MHz	Suzhou Point Positive Electronic Technology Co.,ltd	3.76	Dipole Antenna
5725-5850MHz	Suzhou Point Positive Electronic Technology Co.,ltd	3.79	Dipole Antenna

2.8 Label and compliance information

Grantees are responsible for the continued compliance of their modules to the FCC rules. This includes advising host product manufacturers that they need to provide a physical or e-label stating “Contains FCC ID” with their finished product. See Guidelines for Labeling and User Information for RF Devices – KDB Publication 784748.

Explanation: The host system using this module, should have label in a visible area indicated the following texts: “Contains FCC ID:XCO-X501, ContainsIC:7756A-X501”

2.9 Information on test modes and additional testing requirements%

Additional guidance for testing host products is given in KDB Publication 996369 D04 Module Integration Guide. Test modes should take into consideration different operational conditions for a stand-alone modular transmitter in a host, as well as for multiple simultaneously transmitting modules or other transmitters in a host product.

The grantee should provide information on how to configure test modes for host product evaluation for different operational conditions for a stand-alone modular transmitter in a host, versus with multiple, simultaneously transmitting modules or other transmitters in a host.

Grantees can increase the utility of their modular transmitters by providing special means, modes, or instructions that simulates or characterizes a connection by enabling a transmitter. This can greatly simplify a host manufacturer’s determination that a module as installed in a host complies with FCC requirements. **Explanation:** Top band can increase the utility of our modular transmitters by providing instructions that simulates or characterizes a connection by enabling a transmitter.

Additional testing, Part 15 Subpart B disclaimer

The grantee should include a statement that the modular transmitter is only FCC authorized for the specific rule parts (i.e., FCC transmitter rules) listed on the grant, and that the host product manufacturer is responsible for compliance to any other FCC rules that apply to the host not covered by the modular transmitter grant of certification. If the grantee markets their product as being Part 15 Subpart B compliant (when it also contains unintentional-radiator digital circuity), then the grantee shall provide a notice stating that the final host product still requires Part 15 Subpart B compliance testing with the modular transmitter installed.

Explanation: The module without unintentional-radiator digital circuity, so the module does not require an evaluation by FCC Part 15 Subpart B. The host shoule be evaluated by the FCC Subpart B.