DYNAUDIO

first time setup

Dynaudio Xeo 2

1

Placement

- Unpack the speakers.
- A pair of speakers consist of a Master and a Slave unit. Master unit carries the audio input interfaces. Choose the most convenient position for the Master and Slave unit.
- Set the left and right switch on rearplate for each speaker.
- Set the speaker position switch that best describes the speakers need for acoustic compensation.
  - **Neutral** the speaker has no reflecting walls nearby
  - **Wall** the speaker is positioned near a wall
  - **Corner** the speaker is positioned near two walls
- Speakers that should play together must have same zone-setting (Red, Green, Blue).

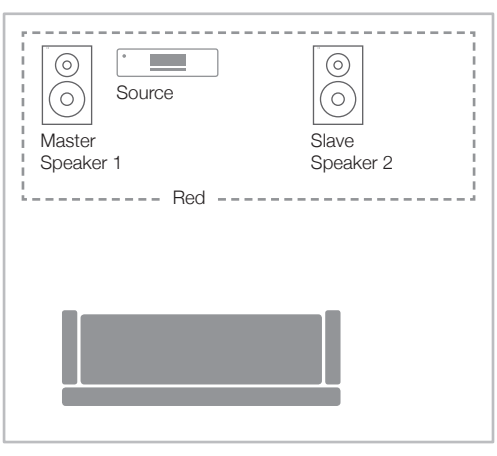

Adjustments (example)

Speaker 1:
Master, Left, Corner, Red

Speaker 2:
Slave, Right, Wall, Red

2

Power to speaker

Connect power cable to the speakers.
Apply power and await bootup.

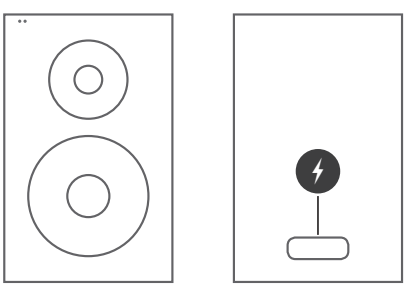

3

Bluetooth setup

Pairing is done by Press-and-hold the button on remote. This will make the master speaker available for pairing for one minute. During this minute you can connect your device to the master speaker. The pairing will be stored in the speaker.

Connecting your device via Bluetooth
When your device has been paired with the master speaker, you can connect again by choosing the Xeo 2 device from your list of Bluetooth devices.

To playback from Bluetooth input, pair and connect your Bluetooth source device with the speakers and start playback. Press button on remote to choose this input on the speakers.

Disconnecting your Bluetooth device
Press-and-hold button to disconnect a connected device or disconnect from the device connected to the speaker.

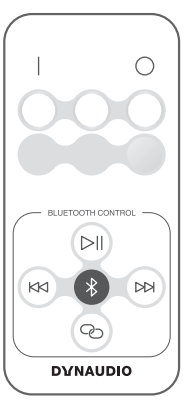

White LED on the front of the speaker indicates Bluetooth status

- Pairing Mode
- Connected
- Not Connected

4

Connect speakers

Playback from direct inputs

Apply signal to one or more of the audio inputs of the master speaker and press according button (AUX, LINE, OPT) on the remote. The speakers will automatically detect the signal and start playback. If they are set to same zone, master and slave will connect wirelessly with each other.

If no signal is applied to either input, the speaker will keep on scanning the inputs for the next 20 minutes and go to standby.

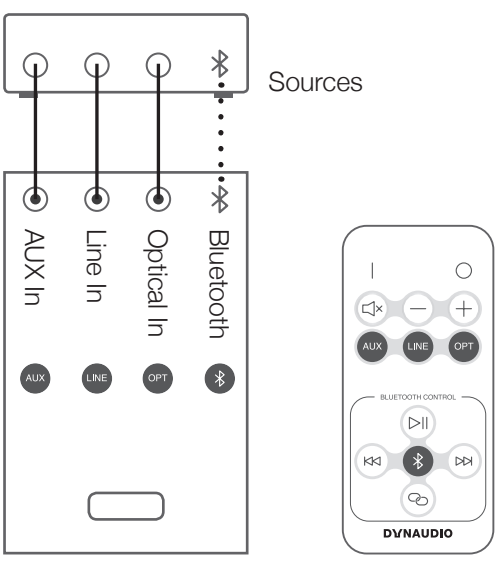

5

Playback from Dynaudio Hub or Dynaudio Connect

Press the remote button A, B or C, corresponding to the Id setting on the rearplate of the Hub/Connect.
When connection is established, you can press the desired Input button on remote.

*Connect/Hub/remote control sold seperately.

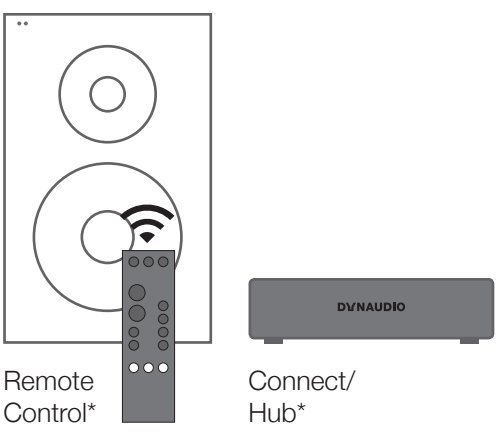

6

Controls

button

- Press to power ON the speaker and scan the inputs.
  - If previous input was direct inputs, it will scan the direct inputs for audio signal.
  - If previous input was from Hub/Connect, it will scan the previous devices inputs.
- Press to jump to another input.
- Press-and-hold to power OFF the speaker.

button

- Raises the volume level.
- Press-and-hold to do fast adjustment.

button

- Lowers the volume level.
- Press-and-hold to do fast adjustment.

Controls on the top of the speaker

Subject to change without notice.
Please find the latest manual and firmware version on www.dynaudio.com

Important Safety Instructions

1. Read these instructions.
2. Keep these instructions.
3. Heed all warnings.
4. Follow all instructions.
5. Do not use this apparatus near water.
6. Clean only with dry cloth.
7. Do not block any ventilation openings. Install in accordance with the manufacturer‘s instructions.
8. Do not install near any heat sources such as radiators, heat registers, stoves, or other apparatus (including amplifiers) that produce heat.
9. Do not defeat the safety purpose of the polarized or grounding-type plug. A polarized plug has two blades with one wider than the other.
   A grounding type plug has two blades and a third grounding prong. The wide blade or the third prong are provided for your safety. If the provided plug does not fit into your outlet, consult an electrician for replacement of the obsolete outlet.
10. Protect the power cord from being walked on or pinched particularly at plugs, convenience receptacles, and the point where they exit from the apparatus.
11. Only use attachments/accessories specified by the manufacturer.
12. Use only with the cart, stand, tripod, bracket, or table specified by the manufacturer, or sold with the apparatus. When a cart is used use caution when moving the cart/apparatus combination to avoid injury from tip-over.
13. Unplug this apparatus during lightning storms or when unused for long periods of time.
14. Refer all servicing to qualified service personnel. Servicing is required when the apparatus has been damaged in any way, such as power supply cord or plug is damaged, liquid has been spilled or objects have fallen into the apparatus, the apparatus has been exposed to rain or moisture, does not operate normally, or has been dropped.
15. WARNING: To reduce the risk of fire or electric shock, this apparatus should not be exposed to rain or moisture and objects filled with liquids, such as vases, should not be placed on this apparatus.
16. To completely disconnect this equipment from the mains, disconnect the power supply cord plug from the receptacle.
17. The mains plug of the power supply cord shall remain readily operable.

Warning

RISK OF ELECTRIC SHOCK! DO NOT OPEN!
To reduce the risk of electric shock, do not remove the back panel and do not expose the apparatus to rain or moisture. No user serviceable parts inside. Refer servicing to qualified personnel.

Unpacking

After unpacking, make sure the system is complete and check the device and all accessories for transport damage. Transport damage may be expected if the packaging is severely harmed. Do not attempt to commission a damaged device. If the contents are incomplete or damaged, please contact your Dynaudio Xeo distributor. Distributor addresses can be found in the Internet at www.dynaudio.com.

Packaging material

The packaging has been designed so that it may be reused if it was not damaged during transport. Do not throw away the packaging and use the original packaging for all further transport.

Disposal

Disposal of Old Electrical & Electronic Equipment (Applicable in European countries with separate collection systems)

This symbol on the product or on its packaging indicates that this product shall not be treated as household waste. Instead it shall be handed over to the applicable collection point for the recycling of electrical and electronic equipment. By ensuring this product is disposed of correctly, you will help prevent potential negative consequences for the environment and human health, which could otherwise be caused by inappropriate waste handling of this product.
The recycling of materials will help to conserve natural resources. For more detailed information about recycling of this product, please contact your local city office, your household waste disposal service or the shop where you purchased the product.

Safety information

Sleep and low-power modes

Sleep mode is available by pressing [OFF] button on remote or if there is no audio signal for 20 minutes. In this mode the wireless network will be active and all connected units will remain synchronized.

- Sleep mode power consumption is <2W

Low power standby mode is available by press-and-hold OFF button on remote for 5 seconds. In this mode the wireless network is disabled and there is no connection between the speakers.

- Low-power standby mode power consumption is <0.5W

Safety information

Loudspeakers

WARNING: Dangerous electrical voltage

If the loudspeakers are connected to the mains voltage, a dangerous electrical voltage is present inside the speakers.

- Never open the loudspeaker housing.
- Do not operate defective loudspeakers and disconnect defective loudspeakers from the mains voltage. Please contact your Dynaudio Xeo distributor if you have any problems. Distributor addresses can be found in the Internet at www.dynaudio.com.
- Use the supplied power cable to connect the loudspeakers to the mains voltage. Make sure that the power supply cable is not damaged; exchange it for a new one if it has been damaged.

Remote control battery

Note: The batteries (battery pack or batteries installed) shall not be exposed to excessive heat such as sunshine, fire or the like.

CAUTION
Danger of explosion if battery is incorrectly replaced. Replace only with the same or equivalent type.

The remote control supplied with a coin/button cell battery. If the coin/button cell battery is swallowed, it can cause severe internal burns in just 2 hours and can lead to death.
Keep new and used batteries away from children. If the battery compartment does not close securely, stop using the product and keep it away from children.
If you think batteries might have been swallowed or placed inside any part of the body, seek immediate medical attention.

su1226 **WARNING**

DO NOT INGEST BATTERY, CHEMICAL BURN HAZARD!

Reminding

This device complies with Part 15 of the FCC Rules. Its operation is subject to the following two conditions: (1) This device may not cause harmful interference, and (2) this device must accept any interference received, including interference that may cause undesired operation.

Cet appareil est conforme à la section 15 des réglementations de la FCC. Le fonctionnement de l’appareil est sujetaux deux conditions suivantes : (1) cet appareil ne doit pas provoquer d’interférences néfastes, et (2) cet appareil doit tolérer les interférences reçues, y compris celles qui risquent de provoquer un fonctionnement indésirable.

Note: This product has been tested and found to comply with the limits for a Class B digital device, pursuant to Part 15 of the FCC Rules. These limits are designed to provide reasonable protection against harmful interference in a residential installation. This product generates, uses, and can radiate radio fre- quency energy and, if not installed and used in accordance with the instructions, may cause harmful interference to radio communications. However, there is no guarantee that interference will not occur in a particular installation.
If this product does cause harmful interference to radio or television reception, which can be determined by turning the equipment off and on, the user is encouraged to try to correct the interference by one or more of the following measures:

- Reorient or relocate the receiving antenna.
- Increase the separation between the equipment and receiver.
- Connect the equipment into an outlet on a circuit different from that to which the receiver is connected.
- Consult the dealer or an experienced radio/TV technician for help.

Please take attention that changes or modification not expressly approved by the party responsible for compliance could void the user’s authority to operate the equipment.

IC NOTICE

This device complies with Industry Canada licence-exempt RSS standard(s). Operation is subject to the following two conditions: (1) this device may not cause interference, and (2) this device must accept any interference, including interference that may cause undesired operation of the device.

Le présent appareil est conforme aux CNR d‘Industrie Canada applicables aux appareils radioexempts de licence. L‘exploitation est autorisée aux deux conditions suivantes : (1) l‘appareil ne doit pas produire de brouillage, et (2) l‘utilisateur de l‘appareil doit accepter tout brouillage radioélectrique subi, même si le brouillage est susceptible d‘en compromettre le fonctionnement.

MPE Reminding

This equipment should be installed and operated with a minimum distance 20 cm between the radiator and your body.

Cet équipement doit être installé et utilisé à une distance minimale de 20 cm entre le radiateur et votre corps.

(i) The device for operation in the band 5150-5250 MHz is only for indoor use to reduce the potential for harmful interference to co-channel mobile satellite systems;

(ii) The maximum antenna gain permitted for devices in the bands 5250-5350 MHz and 5470-5725 MHz shall comply with the e.i.r.p. limit; and

(iii) The maximum antenna gain permitted for devices in the band 5725-5825 MHz shall comply with the e.i.r.p. limits specified for point-to-point and non point- to-point operation as appropriate.

(i) Tout appareil destiné à la bande 5150-5250 MHz devra être exclusivement utilisé en intérieur afin de réduire les risques de pertuarbations électromagné- tiques gênantes sur les systèmes de satellite mobile dans un même canal.

(ii) Les radars à forte puissance sont désignés comme les utilisateurs principaux (c’est-à-dire qu’ils sont prioritaires) des bandes 5250-5350 MHz et

(iii) 5650-5850 MHz. Ils peuvent provoquer des perturbations électromagnétiques sur les appareils de type LELAN (réseau de communication local sans licence) ou les endommager.

Under Industry Canada regulations, this radio transmitter may only operate using an antenna of a type and maximum (or lesser) gain approved for the transmitter by Industry Canada. To reduce potential radio interference to other users, the antenna type and its gain should be so chosen that the equivalent isotropically radiated power (e.i.r.p.) is not more than that necessary for successful communication.

Conformément à la réglementation d’Industrie Canada, le présent émetteur radio peut fonctionner avec une antenne d’un gain maximal (ou inférieur) approuvé pour l’émetteur par Industrie Canada. Dans le but de réduire les risques de brouillage radioélectrique à l’intention des autres utilisateurs, il faut choisir le type d’antenne et son gain de sorte que la puissance isotrioe rayonnée équivalente (p.i.r.e.) ne dépasse pas l’intensité nécessaire à l’établissement d’une communication satisfaisante.

The USB socket on rearplate marked with label ‘Service’ is for firmware upgrade purpose only.

This product can be used in all EU regions for indoor use with no further restrictions.

This product complies with the Directive 1999/5/EC.

Relevant DoC for this product can be found in our Dynaudio homepage via the link:
http://www.dynaudio.com/support/manuals/

CE