Hearing Aid Compatibility (HAC) Volume Control Test Report

APPLICANT	:	Shenzhen Tinno Mobile Technology Corp.
PRODUCT NAME	:	Smart Phone
MODEL NAME	:	V461A
BRAND NAME	:	N/A
FCC ID	:	XD6V461A
STANDARD(S)	:	FCC 47 CFR Part 20 (20.19) ANSI C63.19-2019 ANSI/TIA-5050-2018
RECEIPT DATE	:	2024-03-25
TEST DATE	:	2024-04-04 to 2024-04-16
ISSUE DATE	:	2025-12-12

Edited by: Pang Siyu

Pang Siyu (Rapporteur)

Approved by: Shen Junsheng

Shen Junsheng (Supervisor)

NOTE: This document is issued by Shenzhen Morlab Communications Technology Co., the test report shall not be reproduced except in full without prior written permission of the company. The test results apply only to the particular sample(s) tested and to the specific tests carried out which is available on request for validation and information confirmed at our website.

MORLAB

Shenzhen Morlab Communications Technology Co., Ltd.
FL.1-3, Building A, FeiYang Science Park, No.8 LongChang Road,
Block67, BaoAn District, ShenZhen , GuangDong Province, P. R. China

Tel: 86-755-36698555 Fax: 86-755-36698525
Http://www.morlab.cn E-mail: service@morlab.cn

DIRECTORY

1. Statement of Volume Control ····· 4
2. Technical Information ····· 5
2.1. Applicant and Manufacturer Information ····· 5
2.2. Equipment under Test (EUT) Description ····· 5
2.3. Applied Reference Documents ····· 7
3. Air Interface and Operating Mode ····· 8
4. Volume Control Test Requirements and Restrictions ····· 9
4.1. Conversational Gain Performance ····· 9
4.2. Receive Distortion and Noise Performance ····· 9
4.3. Receive Acoustic Frequency Response Performance ····· 9
5. Volume Control Measurement System ····· 12
6. Volume Control Measurement Procedure ····· 13
7. Test Equipment List ····· 14
8. Supported Codec Summary ····· 15
9. Test Results Summary ····· 17
9.1. General Guidance ····· 17
9.2. Test Results ····· 19
10. Uncertainty Assessment ····· 24
Annex A General Information ····· 26
Annex B Test Setup Photos ····· 27
Annex C Test Results of Distortion and Noise ····· 27
Annex D Test Results of Volume Control ····· 27

Change History		
Version	**Date**	**Reason for change**
1.0	2025-12-12	First edition

1. Statement of Volume Control

The lowest conversational gain found during test as bellows:

Mounting Force	Lowest Conversational Gain (dB)
2N	12.81
8N	18.53

Note:

1. This device is in compliance with compliance with HAC requirement specified in FCC 47 CFR Part 20.19 and ANSI C63.19-2019 and tested in accordance with the measurement methods and procedures specified in ANSI/TIA-5050-2018 and FCC KDB publications.
2. The 2N force is used for testing requirements related to use by persons with hearing devices and the 8N force is used for testing requirements related to use by persons without hearing devices.
3. The declarations of EUT presented in the report are provided by applicant and/or manufacturer, and the test laboratory is not responsible for the accuracy of the information.

2. Technical Information

Note: Provide by applicant.

2.1. Applicant and Manufacturer Information

Applicant:	Shenzhen Tinno Mobile Technology Corp.
Applicant Address:	27-001, South side of Tianlong mobile HQ Building, Tongfa South Road, Xili Street, Nanshan District, Shenzhen, Guangdong Province, China, 518000
Manufacturer:	Shenzhen Tinno Mobile Technology Corp.
Manufacturer Address:	27-001, South side of Tianlong mobile HQ Building, Tongfa South Road, Xili Street, Nanshan District, Shenzhen, Guangdong Province, China, 518000

2.2. Equipment under Test (EUT) Description

Product Name:	Smart Phone
EUT No.:	34#
Hardware Version:	V1.0
Software Version:	V461A_14_USERDEBUG_V002
Frequency Bands:	GSM 850: 824 MHz ~ 849 MHz GSM 1900: 1850 MHz ~ 1910 MHz WCDMA Band II: 1850 MHz ~ 1910 MHz WCDMA Band IV: 1710 MHz ~ 1755 MHz WCDMA Band V: 824 MHz ~ 849 MHz LTE Band 2: 1850 MHz ~ 1910 MHz LTE Band 4: 1710 MHz ~ 1755 MHz LTE Band 5: 824 MHz ~ 849 MHz LTE Band 12: 699 MHz ~ 716 MHz LTE Band 17: 704 MHz ~ 416 MHz LTE Band 25: 1850 MHz ~ 1915 MHz LTE Band 26: 814 MHz ~ 849 MHz LTE Band 41: 2496 MHz ~ 2490 MHz LTE Band 66: 1710 MHz ~ 1780 MHz LTE Band 71: 663 MHz ~ 698 MHz WLAN 2.4GHz: 2412 MHz ~ 2462 MHz WLAN 5.2GHz: 5180 MHz ~ 5240 MHz WLAN 5.3GHz: 5260 MHz ~ 5320 MHz WLAN 5.5GHz: 5500 MHz ~ 5720 MHz

	WLAN 5.8GHz: 5745 MHz ~ 5825 MHz Bluetooth: 2402 MHz ~ 2480 MHz	
Modulation Mode:	GSM/GPRS: GMSK EDGE: 8PSK WCDMA: QPSK, 16QAM LTE: QPSK, 16QAM, 64QAM 802.11b: DSSS 802.11a/g/n-HT20/HT40/ac-VHT20/40/80: OFDM BR+EDR: GFSK(1Mbps), π/4-DQPSK(2Mbps), 8-DPSK(3Mbps) Bluetooth LE: GFSK(1Mbps, 2Mbps)	
Antenna type:	WWAN: PIFA Antenna WLAN: PIFA Antenna Bluetooth: PIFA Antenna	
VoLTE Mode:	Support	
VoWi-Fi Mode:	Support	
VoIP Mode:	Support	
SIM Cards Description:	SIM 1	GSM+WCDMA+LTE
	SIM 2	GSM+WCDMA+LTE

Note: For more detailed description, please refer to specification or user manual supplied by the applicant and/or manufacturer.

2.3. Applied Reference Documents

Leading reference documents for testing:

No.	Identity	Document Title	Remark
1	FCC 47 CFR Part 20 (20.19)	Hearing aid-compatible mobile handsets	/
2	ANSI C63.19-2019	American National Standard Methods of Measurement of Compatibility between Wireless Communications Devices and Hearing Aids	/
3	ANSI/TIA-5050-2018	Telecommunications Communications Products Receive Volume Control Requirements for Wireless (Mobile) Devices	/
4	KDB 285076 D01v06r04	HAC Guidance	/
5	KDB 285076 D03v01r06	HAC FAQ	/
6	KDB 285076 D04v02	Volume Control	/
7	KDB 285076 D05v01	HAC Waiver DA 23-914	/
Note: Any additions, deviation, or exclusions from the method shall be noted in the “Remark".			

3. Air Interface and Operating Mode

Air Interface	Band	Transport Type	ANSI C63.19 Tested	Simultaneous Transmitter	Name of Voice Service	Power State for HAC Compliance
GSM	GSM850	VO	Yes	WLAN, BT	CMRS Voice	Full
	GSM1900		Yes			Full
	EDGE 850	VD	Yes	WLAN, BT	Google Meet	Full
	EDGE 1900		Yes			Full
WCDMA (UMTS)	Band II	VO	Yes	WLAN, BT	CMRS Voice	Full
	Band IV		Yes			Full
	Band V		Yes			Full
	HSPA	VD	Yes	WLAN, BT	Google Meet	Full
FDD-LTE & TDD-LTE	Band 2	VD	Yes	WLAN, BT	VoLTE & Google Meet	Full
	Band 4		Yes			Full
	Band 5		Yes			Full
	Band 12		Yes			Full
	Band 17		Yes			Full
	Band 25		Yes			Full
	Band 26		Yes			Full
	Band 41		Yes			Full
	Band 66		Yes			Full
	Band 71		Yes			Full
WiFi	2450	VD	Yes	GSM, UMTS, LTE	VoWiFi & Google Meet	Full
	5200 (U-NII-1)		Yes			Full
	5300 (U-NII-2A)		Yes			Full
	5500 (U-NII-2C)		Yes			Full
	5800 (U-NII-3)		Yes			Full
BT	2450	DT	No	GSM, UMTS, LTE	N/A	N/A

Note:

1) Air Interface/Band MHz: List of all air interfaces and bands supported by the handset.
2) Type: For each air interface, indicate the type of voice transport mode:
   i. VO = legacy Cellular Voice Service, from ANSI C63.19-2019.
   ii. DT = Digital Transport only (no voice) (e.g., Bluetooth), not subject to C63.19 HAC testing.
   iii. VD = IP Voice Service over Digital Transport.
3) Simultaneous Transmitter: Indicate any air interface/bands that operate in simultaneous or concurrent service transmission mode**.**
4) Name of Voice Service: See Q4 in 285076 D03 HAC FAQ for further clarification.
5) Set device to highest transmit power in a held to the ear mode.

4. Volume Control Test Requirements and Restrictions

4.1. Conversational Gain Performance

1. According to KDB 285076D05, for the 2N mounting force test, one narrowband and one wideband voice codec embedded with the handset must pass with at least one volume control setting with a Conversational gain of ≥ 6 dB for all voice services, bands of operation and air interfaces over which it operates using one codec bit rate of the applicant's choosing.
2. According to KDB 285076D05, for the 8N mounting force test, one narrowband and one wideband voice codec embedded with the handset must pass with at least one volume control setting with a Conversational gain of ≥ 6 dB for all voice services, bands of operation and air interfaces over which they operate but is not required to meet or exceed the full 18 dB of Conversational gain specified in section 5.1.1 of the TIA 5050 Volume Control Standard using one codec bit rate of the applicant's choosing.
3. Calculate the Conversational Gain by subtracting 70 dB from the measured dB SPL. That is Monoaural Conversational Gain = (Measured dB SPL Level - 70 dB SPL) dB.

4.2. Receive Distortion and Noise Performance

With a mounting force of 8N and 2N, the ratio of the stimulus signal power to the 100 Hz to 8000 Hz total A-weighted distortion and noise power shall be ⩾ 20 dB when tested over the range of 1/3 octave band center frequencies:

1. Narrowband transmission mode: Each 1/3 octave band center frequency from 400 Hz to 3150 Hz.
2. Wideband transmission mode: Each 1/3 octave band center frequency from 250 Hz to 5000 Hz.
3. According to KDB 285076 D05, choosing one narrowband and one wideband for all voice services, bands of operation and air interfaces over which it operates using one codec bit rate of the applicant's choosing to meet Receive Distortion and Noise requirement.

4.3. Receive Acoustic Frequency Response Performance

The receive acoustic frequency response is required to be met when tested with a handset mounting force of 2N and 8N. For a hearing device, a 2N force is used to simulate usage of the handset by a person with a hearing device in the microphone (acoustic) mode.

The receive frequency response is the ratio of the output sound pressure at the listener reference point (LRP) (FF or DF) to the voltage input to the reference codec, or digital bit stream equivalent, as shown in Eq 1 for each frequency or frequency band (fi):

$$S_{JE} = 20\ \log_{10}(P_E/V_R)\ \text{dB re 1 Pa/V} \qquad \text{Eq 1}$$

Where

S_{JE} = Receive Sensitivity, Junction to Ear, at f_i.

P_E = LRP sound pressure measured by ear simulator at DRP and translated to the FF or DF (see Annex B), at f_i.

V_R = RMS input voltage to the reference codec, or digital bit stream equivalent, at f_i.

For the volume control settings determined in section 5.1.1 of ANSI/TIA-5050 with a mounting force of 8N and 2N, the receive frequency response shall be measured at the DRP in 1/12 octave bands. After translation to the FF or DF, it shall fall between the applicable upper and lower limits.
The exact limit values at any 1/12 octave band center frequency falling between two consecutive points specified in the table may be calculated using the formula given in Eq 2 below:

$$X_f = X_1 + (X_2 - X_1) * \left(\frac{\log_{10} f - \log_{10} f_1}{\log_{10} f_2 - \log_{10} f_1}\right) \qquad \text{Eq 2}$$

Where

X_f = limit value at frequency f

X_1 = limit value at frequency f_1 as given in table

X_2 = limit value at frequency f_2 as given in table

1. Narrowband: The 1/12 octave band frequency response after translation to the FF or DF shall fall between the upper and lower limits below.

Lower Limit Frequency (Hz)	**Lower Limit (dB)**
300	-6
3400	-6
Upper Limit Frequency (Hz)	**Upper Limit (dB)**
100	+6
4000	+6

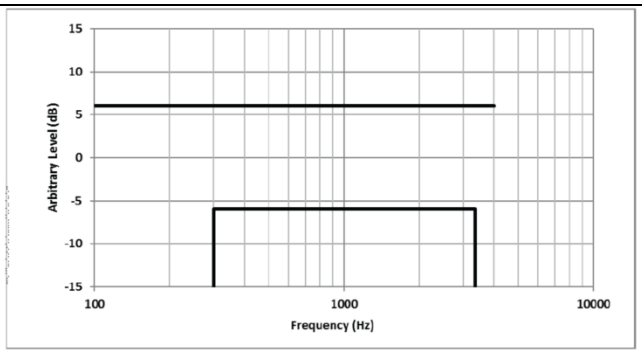

2. Wideband: The 1/12 octave band frequency response after translation to the FF or DF shall fall between the upper and lower limits below.

Lower Limit Frequency (Hz)	Lower Limit (dB)
200	-10
300	-6
500	-6
6300	-12
Upper Limit Frequency (Hz)	**Upper Limit (dB)**
100	+6
1000	+6
2000	+8
8000	+8

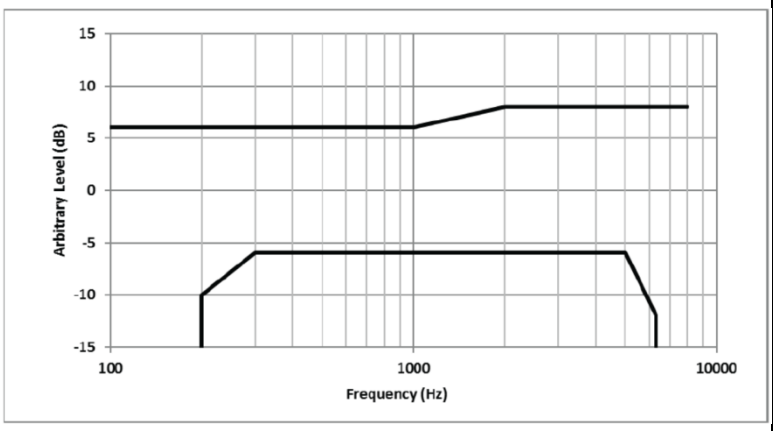

5. Volume Control Measurement System

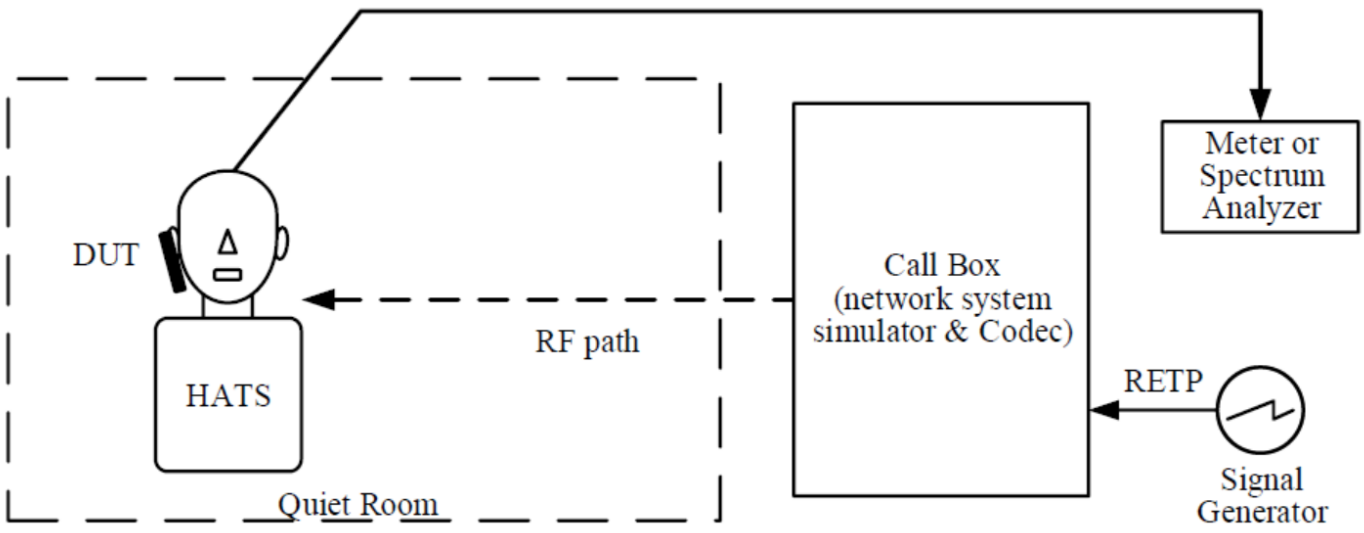

Fig 5.1 Volume Control System Configurations

Note:

1. A room with background noise no greater than 40 dBA.
2. The Call Box passes the voice channel stream to the DUT without modification. There is no gain or loss in the voice channel stream due to the Call Box interface.
3. The RETP (receive electrical test point) is the point in the device test arrangement where signals are applied to the DUT in the receive direction.
4. Per C63 & KDB 285076 D02v03, define all of the applicable input audio level:
   1) GSM input level: -20dBm0
   2) UMTS input level: -20dBm0
   3) VoLTE input level: -20dBm0
   4) VoWiFi input level: -20dBm0
   5) OTT VoIP input level: -20dBm0
5. The callbox of CMW500 is used to GSM, UMTS, 1xRTT of CDMA200, VoLTE over IMS and Vo-WiFi over IMS Volume Control measurement, the data application unit of the CMW500 was used to simulate the IP multimedia subsystem server. And the CMW500 can be manually configured to ensure and control the speech input level result is -20dBm0 for VoLTE/VoWiFi when the device during the IMS connection.

6. Volume Control Measurement Procedure

<Conversational Gain Performance>

1. Configure the DUT with a mounting force of 8N and test equipment as shown in Figure 1 in an active call state with the applicable codec for the transmission mode under test.
2. Set the DUT volume control to the maximum setting.
3. If the DUT has an adjustable tone control feature, a tone control setting that meets the frequency response requirements in ANSI/TIA-5050 section 5.3.1 shall be used.
4. Apply the real speech test signal at a level of -20 dBm0 at the RETP and measure the acoustic output at the Drum Reference Point (DRP) over one complete sequence of the test signal.
5. Translate the measurement made at the DRP to the Free Field (FF) using the translation data in Annex B of ANSI/TIA-5050.
6. Over the applicable frequency band, determine the ASL in dB SPL for the resulting sound pressure level in accordance with Method B of ITU-T Recommendation P.56:
   a. Narrowband 100 Hz through 4000 Hz.
   b. Wideband 100 Hz through 7720 Hz.
7. Calculate the Conversational Gain by subtracting 70 dB from the measured dBSPL.
   [Conversational Gain = (Measured dB SPL Level - 70 dB SPL) dB]
8. Measure the output distortion per clause 5.2. If a distortion failure occurs at the maximum volume control setting, reduce the volume control setting and repeat the measurement to determine if a setting can be found for which the conversational gain requirement is met without a distortion failure.
9. Repeat steps 2-8 with a mounting force of 2N.

<Receive Distortion and Noise Performance>

1. Configure the DUT with a mounting force of 8N and test equipment as shown in Figure 1 in an active call state with the applicable codec for the transmission mode under test with the volume control at the setting determined in 5.1.1 of ANSI/TIA-5050.
2. Receive distortion and noise is measured using the PN-SDNR procedure as described in Annex A of ANSI/TIA-5050.
3. To ensure DUT activation, apply the real speech test signal at a level of -20 dBm0 followed immediately by the initial 1/3 octave center frequency PN test signal in Table A.1 of ANSI/TIA-5050 based on the narrowband or wideband operating mode. Measure the acoustic output at the DRP over the complete sequence of the PN test signal.
4. Translate the measurement made at the DRP to the FF using the translation data in Annex B of ANSI/TIA-5050.
5. Calculate the acoustic output unweighted total signal power of the stimulus measurement band as described in A.2 of ANSI/TIA-5050.
6. Calculate the notched A-weighting distortion and noise components as described in A.3 of ANSI/TIA-5050.

7. Calculate the ratio of the signal power to the total A-weighted distortion and noise power using Eq A-1 of ANSI/TIA-5050.
8. Repeat for each of the remaining 1/3 octave center frequencies in Table A.1 of ANSI/TIA-5050 based on the narrowband or wideband operating mode.
9. Repeat steps 2-8 with a mounting force of 2N.

<Receive Acoustic Frequency Response Performance>

1. Configure the DUT with a mounting force of 8N and test equipment as shown in Figure 1 in an active call state with the applicable codec for the transmission mode under test with the volume control at the setting determined in 5.1.1 of ANSI/TIA-5050.
2. If the DUT has an adjustable tone control feature the initial measurement is to be performed with the default tone control setting.
3. Apply the real speech test signal with a level of -20 dBm0 at the RETP.
4. Capture the frequency spectrum at the DRP of the HATS using real-time analysis with 1/12 octave bands over the frequency range from 100 Hz to 4000 Hz for narrowband measurements, or over the frequency range from 100 Hz to 8000 Hz for wideband measurements, averaged over the entire duration of the test signal.
5. Transform the DRP frequency spectrum measurement to the FF or DF (see Annex B of ANSI/TIA-5050).
6. Divide the 1/12 octave measurement data by the 1/12 octave frequency spectrum of the test signal at the RETP and present the measurement in terms of dB (Pa/V).
7. Apply the applicable frequency response limits to determine compliance.
8. If the default tone control setting does not meet the requirement, repeat the above steps for other tone control settings to determine a tone control setting that meets the requirements.
9. Repeat with a mounting force of 2N

7. Test Equipment List

Manufacturer	Name of Equipment	Type/Model	Serial No./ SW Version	Calibration	
				Last Cal.	Due Date
NTi AUDIO	Audio Analyzer	FLexus FX100	11762	2023.06.05	2024.06.04
NTi AUDIO	Audio Holder	N/A	1094	NCR	NCR
ETS	HC-54892	N/A	11762	2023.06.05	2024.06.04
ETS	Anechoic Chamber	N/A	HC-54892	2023.06.21	2026.06.20
R&S	Base Station	CMW500	165755	2024.01.25	2025.01.24

8. Supported Codec Summary

<General Guidance>

1. According to KDB 285076 D04, it's not required that every combination of codec, codec data rate, air interface, band, band channel, bandwidth, modulation data rate, subcarrier spacings, and resource blocks to be documented in a test report. However, it is expected to investigate and document only the worst-case test conditions and results. Each submitted test report shall document the codec type (i.e., NB, WB, EVS, etc.), every air interface (i.e., LTE, 5G NR, WI-FI), and band supported for the worst-case codec bit rate, band channel, bandwidth, air interface bit rate, subcarrier spacings, and resource blocks.
2. According to KDB 285076 D05 only CMRS narrowband and CMRS wideband voice codecs are required to comply with the volume control requirements of the ANSI/TIA 5050 Volume Control Standard. Other codecs out of 3GPP such as full-band and super-wideband codec or OTT VoIP codecs should be documented in the test report but not required to comply with the requirements of ANSI/TIA 5050.

<Codec Summary>

Wireless Mode	Codec/Bitrates (kbps)					
	AMR NB	AMR WB	EVS SWB	EVS WB	EVS NB	EVS FWB
GSM	4.75	6.60				
	5.15	8.85				
	5.90	12.65				
	6.60	14.25				
	7.40	15.85				
	7.95	18.25				
	10.20	19.85				
	12.20	23.05				
		23.85				
WCDMA	4.75	6.60				
	5.15	8.85				
	5.90	12.65				
	6.60	14.25				
	7.40	15.85				
	7.95	18.25				
	10.20	19.85				
	12.20	23.05				
		23.85				
VoLTE	4.75	6.60		5.9		

	5.15	8.85		7.2		
	5.90	12.65		8.0		
	6.60	14.25		9.6		
	7.40	15.85		13.2		
	7.95	18.25		16.4		
	10.20	19.85		24.4		
	12.20	23.05				
		23.85				
VoWiFi	4.75	6.60		5.9		
	5.15	8.85		7.2		
	5.90	12.65		8.0		
	6.60	14.25		9.6		
	7.40	15.85		13.2		
	7.95	18.25		16.4		
	10.20	19.85		24.4		
	12.20	23.05				
		23.85				

Wireless Mode	Google Meet Codec/Bitrates (kbps)
OTT-VoIP	OPUS
	6
	40
	75

9. Test Results Summary

9.1. General Guidance

1. The middle channel of each frequency band is used to Volume Control.
2. All of test configurations were tested under the maximum volume.
3. According to KDB 285076 D05, the technical testing requirements for the conversational gain, distortion, and frequency response tests that amends KDB 285076 D04 Volume Control under the conditions of the limited-term waiver DA 23-914, that
   a. Under the waiver, only CMRS narrowband and CMRS wideband voice codecs are required to comply with the volume control requirements of the ANSI/TIA-5050 Volume Control Standard:
      1) For the 2N mounting force test, one narrowband and one wideband voice codec embedded with the handset must pass with at least one volume control setting with a conversational gain of ≥ 6 dB for all voice services, bands of operation and air interfaces over which it operates using one codec bit rate of the applicant's choosing.
      2) For the 8N mounting force test, one narrowband and one wideband voice codec embedded with the handset must pass with at least one volume control setting with a conversational gain of ≥ 6 dB for all voice services, bands of operation and air interfaces over which they operate but is not required to meet or exceed the full 18 dB of conversational gain specified in section 5.1.1 of the ANSI/TIA-5050 Volume Control Standard using one codec bit rate of the applicant's choosing.
   b. For all other narrowband and wideband codecs not evaluated in 2.a. above, ANSI/TIA-5050 Receive Distortion and Noise Performance and Receive Acoustic Frequency Response Performance evaluations are not required; however, these codecs shall be assessed for conversational gain and documented in the test report at the 2N and 8N levels with a gain of ≥ 6 dB for all voice services, bands of operation and air interfaces over which they operate. The handset volume setting used to comply with 2.a. shall be used for these other CMRS codec evaluations.
   c. Any other codec for voice services embedded in the handset, not identified in 2.a. and 2.b. above, is not required to comply or demonstrate in the test reports for conversational gain.
4. The worst ratio configuration (i.e., codec data rate, air interface, band, band channel, bandwidth, modulation data rate, subcarrier spacings, and resource blocks) through internal radio configuration investigation was documented as below.
5. The product is tested in the room with an ambient noise of less than 40 dBA.
6. The VOWIFI test mode is tested according to the worst mode of the T-Coil.
7. The distortion and noise test results data are referred to Annex C.
8. According to KDB 285076 D05, any other codec for voice services embedded in the handset, not identified in 2.a. and 2.b. above, (eg: Google Meet, Apple Facetime and non-3GPP VoIP codecs) is not required to comply or demonstrate in the test reports for conversational gain. Waiver DA 23-914 only requires conversational gain compliance for CMRS narrowband and CMRS wideband voice codecs as stated above. All other codecs either part of 3GPP set such as full-band and super-wideband codecs or

OTT codecs are to be documented in the test report but not required to comply with the TIA 5050 Volume Control Standard. Therefore, Google Meet does not test content related to Volume Control in this report.

9. The device has similar frequency in LTE bands: LTE Band 2/25, LTE Band 4/66, LTE Band 5/26, LTE Band 12/17 since the supported frequency spans for the smaller LTE bands are completely cover by the larger LTE bands, therefore, only larger LTE bands were required to be tested for volume control.

9.2. Test Results

➢ **Test Results for KDB 285076 D05 2.a**

Volume Control Performance					Conversational Gain Performance		Distortion and Noise Performance	Frequency Response Performance
Air Interface	**Radio Configuration**	**Channel**	**Mounting Force**	**Codec Rates (Kbps)**	**Speech Level (dB SPL)**	**Conv. Gain (dB)**	**Minimum PN-SDNR (dB)**	**Free Field (FF)**
GSM 850	GSM Voice	189	2N	AMR-NB 12.2	83.43	13.43	43.26	PASS
GSM 850	GSM Voice	189	2N	AMR-WB 23.85	84.65	14.65	41.84	PASS
GSM 850	GSM Voice	189	8N	AMR-NB 12.2	89.51	19.51	44.91	PASS
GSM 850	GSM Voice	189	8N	AMR-WB 23.85	90.69	20.69	43.15	PASS
GSM 1900	GSM Voice	661	2N	AMR-NB 12.2	83.46	13.46	43.74	PASS
GSM 1900	GSM Voice	661	2N	AMR-WB 23.85	84.74	14.74	41.66	PASS
GSM 1900	GSM Voice	661	8N	AMR-NB 12.2	89.42	19.42	45.15	PASS
GSM 1900	GSM Voice	661	8N	AMR-WB 23.85	90.75	20.75	42.97	PASS

Volume Control Performance					Conversational Gain Performance		Distortion and Noise Performance	Frequency Response Performance
Air Interface	**Radio Configuration**	**Channel**	**Mounting Force**	**Codec Rates (Kbps)**	**Speech Level (dB SPL)**	**Conv. Gain (dB)**	**Minimum PN-SDNR (dB)**	**Free Field (FF)**
WCDMA II	AMR	9400	2N	AMR-NB 12.2	83.21	13.21	39.78	PASS
WCDMA II	AMR	9400	2N	AMR-WB 23.85	84.62	14.62	37.88	PASS
WCDMA II	AMR	9400	8N	AMR-NB 12.2	89.48	19.48	40.17	PASS
WCDMA II	AMR	9400	8N	AMR-WB 23.85	90.71	20.71	40.15	PASS
WCDMA IV	AMR	1413	2N	AMR-NB 12.2	83.13	13.13	40.03	PASS
WCDMA IV	AMR	1413	2N	AMR-WB 23.85	84.58	14.58	37.53	PASS
WCDMA IV	AMR	1413	8N	AMR-NB 12.2	89.6	19.6	41.26	PASS
WCDMA IV	AMR	1413	8N	AMR-WB 23.85	90.77	20.77	39.66	PASS
WCDMA V	AMR	4182	2N	AMR-NB 12.2	83.08	13.08	38.86	PASS

WCDMA V	AMR	4182	2N	AMR-WB 23.85	84.43	14.43	37.58	PASS
WCDMA V	AMR	4182	8N	AMR-NB 12.2	89.52	19.52	40.12	PASS
WCDMA V	AMR	4182	8N	AMR-WB 23.85	90.8	20.8	41.13	PASS

<FDD LTE>

Volume Control Performance					Conversational Gain Performance		Distortion and Noise Performance	Frequency Response Performance
Air Interface	**Radio Configuration**	**Channel**	**Mounting Force**	**Codec Rates (Kbps)**	**Speech Level (dB SPL)**	**Conv. Gain (dB)**	**Minimum PN-SDNR (dB)**	**Free Field (FF)**
LTE Band 12	10M_QPSK_1#0	23095	2N	AMR-NB 12.2	83.81	13.81	44.26	PASS
LTE Band 12	10M_QPSK_1#0	23095	2N	AMR-WB 23.85	83.85	13.85	43.39	PASS
LTE Band 12	10M_QPSK_1#0	23095	8N	AMR-NB 12.2	89.35	19.35	46.25	PASS
LTE Band 12	10M_QPSK_1#0	23095	8N	AMR-WB 23.85	89.26	19.26	44.85	PASS
LTE Band 25	20M_QPSK_1#0	26365	2N	AMR-NB 12.2	84.06	14.06	44.13	PASS
LTE Band 25	20M_QPSK_1#0	26365	2N	AMR-WB 23.85	84.11	14.11	43.43	PASS
LTE Band 25	20M_QPSK_1#0	26365	8N	AMR-NB 12.2	89.25	19.25	46.53	PASS
LTE Band 25	20M_QPSK_1#0	26365	8N	AMR-WB 23.85	89.22	19.22	44.92	PASS
LTE Band 26	15M_QPSK_1#0	26865	2N	AMR-NB 12.2	83.65	13.65	44.31	PASS
LTE Band 26	15M_QPSK_1#0	26865	2N	AMR-WB 23.85	83.57	13.57	43.52	PASS
LTE Band 26	15M_QPSK_1#0	26865	8N	AMR-NB 12.2	89.37	19.37	46.11	PASS
LTE Band 26	15M_QPSK_1#0	26865	8N	AMR-WB 23.85	89.25	19.25	44.98	PASS
LTE Band 41	20M_QPSK_1#0	40620	2N	AMR-NB 12.2	83.48	13.48	44.29	PASS
LTE Band 41	20M_QPSK_1#0	40620	2N	AMR-WB 23.85	83.40	13.4	43.55	PASS
LTE Band 41	20M_QPSK_1#0	40620	8N	AMR-NB 12.2	89.25	19.25	46.63	PASS
LTE Band 41	20M_QPSK_1#0	40620	8N	AMR-WB 23.85	89.12	19.12	45.07	PASS
LTE Band 66	20M_QPSK_1#0	132322	2N	AMR-NB 12.2	84.02	14.02	44.19	PASS
LTE Band 66	20M_QPSK_1#0	132322	2N	AMR-WB 23.85	84.05	14.05	43.51	PASS
LTE Band 66	20M_QPSK_1#0	132322	8N	AMR-NB 12.2	89.23	19.23	46.25	PASS
LTE Band 66	20M_QPSK_1#0	132322	8N	AMR-WB 23.85	89.18	19.18	45.02	PASS

LTE Band 71	20M_QPSK_1#0	133332	2N	AMR-NB 12.2	83.75	13.75	20.25	PASS
LTE Band 71	20M_QPSK_1#0	133332	2N	AMR-WB 23.85	83.70	13.7	43.47	PASS
LTE Band 71	20M_QPSK_1#0	133332	8N	AMR-NB 12.2	89.31	19.31	46.47	PASS
LTE Band 71	20M_QPSK_1#0	133332	8N	AMR-WB 23.85	89.23	19.23	45.97	PASS

<WLAN 2.4GHz & 5GHz>

Volume Control Performance					Conversational Gain Performance		Distortion and Noise Performance	Frequency Response Performance
Air Interface	**Radio Configuration**	**Channel**	**Mounting Force**	**Codec Rates (Kbps)**	**Speech Level (dB SPL)**	**Conv. Gain (dB)**	**Minimum PN-SDNR (dB)**	**Free Field (FF)**
WLAN 2.4GHz	802.11g 6Mbps	6	2N	AMR-NB 12.2	85.9	15.9	43.95	PASS
WLAN 2.4GHz	802.11g 6Mbps	6	2N	AMR-WB 23.85	86.02	16.02	43.79	PASS
WLAN 2.4GHz	802.11g 6Mbps	6	8N	AMR-NB 12.2	92.18	22.18	44.45	PASS
WLAN 2.4GHz	802.11g 6Mbps	6	8N	AMR-WB 23.85	92.21	22.21	44.93	PASS
WLAN 5.2GHz	802.11n40 MCS0	46	2N	AMR-NB 12.2	86.19	16.19	43.62	PASS
WLAN 5.2GHz	802.11n40 MCS0	46	2N	AMR-WB 23.85	86.43	16.43	44.6	PASS
WLAN 5.2GHz	802.11n40 MCS0	46	8N	AMR-NB 12.2	92.2	22.2	43.84	PASS
WLAN 5.2GHz	802.11n40 MCS0	46	8N	AMR-WB 23.85	92.26	22.26	44.45	PASS
WLAN 5.3GHz	802.11n40 MCS0	62	2N	AMR-NB 12.2	83.06	13.06	45.22	PASS
WLAN 5.3GHz	802.11n40 MCS0	62	2N	AMR-WB 23.85	82.98	12.98	44.29	PASS
WLAN 5.3GHz	802.11n40 MCS0	62	8N	AMR-NB 12.2	88.78	18.78	44.71	PASS
WLAN 5.3GHz	802.11n40 MCS0	62	8N	AMR-WB 23.85	88.66	18.66	45.74	PASS
WLAN 5.5GHz	802.11n40 MCS0	126	2N	AMR-NB 12.2	82.89	12.89	44.73	PASS
WLAN 5.5GHz	802.11n40 MCS0	126	2N	AMR-WB 23.85	82.81	12.81	44.27	PASS
WLAN 5.5GHz	802.11n40 MCS0	126	8N	AMR-NB 12.2	88.66	18.66	44.44	PASS
WLAN 5.5GHz	802.11n40 MCS0	126	8N	AMR-WB 23.85	88.53	18.53	45.33	PASS
WLAN 5.8GHz	802.11n40 MCS0	159	2N	AMR-NB 12.2	86.18	16.18	45.54	PASS
WLAN 5.8GHz	802.11n40 MCS0	159	2N	AMR-WB 23.85	86.44	16.44	46.05	PASS

WLAN 5.8GHz	802.11n40 MCS0	159	8N	AMR-NB 12.2	89.21	19.21	44.19	PASS
WLAN 5.8GHz	802.11n40 MCS0	159	8N	AMR-WB 23.85	89.17	19.17	45.1	PASS

➢ **Test Results for KDB 285076 D05 2.b**

<FDD LTE>

Air Interface	Modulation / Mode	Channel	Mounting Force	Codec Rates (Kbps)	Speech Level (dB SPL)	Conversational Gain (dB)	Margin to Limit (dB)
LTE B12	10M_QPSK_1#0	23095	2N	EVS-WB 24.4	83.78	13.78	7.78
LTE B12	10M_QPSK_1#0	23095	8N	EVS-WB 24.4	89.28	19.28	13.28
LTE B25	20M_QPSK_1#0	26365	2N	EVS-WB 24.4	84.04	14.04	8.04
LTE B25	20M_QPSK_1#0	26365	8N	EVS-WB 24.4	89.2	19.2	13.2
LTE B26	15M_QPSK_1#0	26865	2N	EVS-WB 24.4	83.52	13.52	7.52
LTE B26	15M_QPSK_1#0	26865	8N	EVS-WB 24.4	89.2	19.2	13.2
LTE B41	20M_QPSK_1#0	40620	2N	EVS-WB 24.4	83.45	13.45	7.45
LTE B41	20M_QPSK_1#0	40620	8N	EVS-WB 24.4	89.19	19.19	13.19
LTE B66	20M_QPSK_1#0	132322	2N	EVS-WB 24.4	84.01	14.01	8.01
LTE B66	20M_QPSK_1#0	132322	8N	EVS-WB 24.4	89.25	19.25	13.25
LTE B71	20M_QPSK_1#0	133332	2N	EVS-WB 24.4	83.68	13.68	7.68
LTE B71	20M_QPSK_1#0	133332	8N	EVS-WB 24.4	89.16	19.16	13.16

<WLAN>

Air Interface	Modulation / Mode	Channel	Mounting Force	Codec Rates (Kbps)	Speech Level (dB SPL)	Conversational Gain (dB)	Margin to Limit (dB)
WLAN 2.4G	802.11g 6Mbps	6	2N	EVS-WB 24.4	86.36	16.36	10.36
WLAN 2.4G	802.11g 6Mbps	6	8N	EVS-WB 24.4	92.24	22.24	16.24
WLAN 5.2G	802.11n40 MCS0	46	2N	EVS-WB 24.4	86.25	16.25	10.25
WLAN 5.2G	802.11n40 MCS0	46	8N	EVS-WB 24.4	92.24	22.24	16.24
WLAN 5.3G	802.11n40 MCS0	62	2N	EVS-WB 24.4	82.93	12.93	6.93

WLAN 5.3G	802.11n40 MCS0	62	8N	EVS-WB 24.4	88.61	18.61	12.61
WLAN 5.5G	802.11n40 MCS0	126	2N	EVS-WB 24.4	82.86	12.86	6.86
WLAN 5.5G	802.11n40 MCS0	126	8N	EVS-WB 24.4	88.6	18.6	12.6
WLAN 5.8G	802.11n40 MCS0	159	2N	EVS-WB 24.4	86.22	16.22	10.22
WLAN 5.8G	802.11n40 MCS0	159	8N	EVS-WB 24.4	89.22	19.22	13.22

10. Uncertainty Assessment

The component of uncertainly may generally be categorized according to the methods used to evaluate them. The evaluation of uncertainly by the statistical analysis of a series of observations is termed a Type A evaluation of uncertainty. The evaluation of uncertainty by means other than the statistical analysis of a series of observation is termed a Type B evaluation of uncertainty. Each component of uncertainty, however evaluated, is represented by an estimated standard deviation, termed standard uncertainty, which is determined by the positive square root of the estimated variance.

The combined standard uncertainty of the measurement result represents the estimated standard deviation of the result. It is obtained by combining the individual standard uncertainties of both Type A and Type B evaluation using the usual “root-sum-squares" (RSS) methods of combining standard deviations by taking the positive square root of the estimated variances. Expanded uncertainty is a measure of uncertainty that defines an interval about the measurement result within which the measured value is confidently believed to lie. It is obtained by multiplying the combined standard uncertainty by a coverage factor. For purpose of this document, a coverage factor two is used, which corresponds to confidence interval of about 95 %.

The judgment of conformity in the report is based on the measurement results excluding the measurement uncertainty.

Declaration of Conformity:

The test results with all measurement uncertainty excluded is presented in accordance with the regulation limits or requirements declared by manufacturers.

Comments and Explanations:

The declared of product specification for EUT presented in the report are provided by the manufacturer, and the manufacturer takes all the responsibilities for the accuracy of product specification.

Component	**Standard Uncertainty (dB)**	**U^2 ($\%^2$)**
Generator Accuracy To enable harmonic distortion measurements to 0.1%，the generator distortion must be <0.05%. This is equivalent to a standard uncertainty of 0.043 dB.	0.043	0.25
Ear Simulator Pressure Sensitivity (incl. Measurement Mic.) The uncertainty of the ear simulator as per the standards and quoted on its calibration certificate is 0.3 dB with a coverage factor of k= 2. This is equivalent to a standard uncertainty of 0.3/2 = 0.15 dB.	0.15	3.03
Microphone Preamplifier The manufacturer quotes the preamp to be within + 0.02 dB with a 95% probability or 2σ. This is equivalent to a standard uncertainty of 0.02/2 =0.01 dB.	0.01	0.01
Analysis System / RMS Detector Typical measurement system detector accuracy is 0.1 dB with a coverage factor of k= 2. This is equivalent to a standard uncertainty of 0.1/2 = 0.05 dB.	0.05	0.33
Effect of Positioning on Mid-Band Sensitivity For a handset, with the HATS positioning jig, the typical standard deviation estimated from a statistically significant number of measurements is +2 dB This is equivalent to a standard uncertainty of 2 dB.	2.0	670.42

Time Varying Effects of the Mouth Simulator for Send & Sidetone For a receive measurement on a handset. the mouth simulator is not used (its uncertainty is zero), The standard uncertainty of 0 dB	0	0.00
Total Standard Uncertainty (%)	25.96	
UMAX (k=2) (%)	51.9	
UMAX (k=2) (dB)	3.6	

Annex A General Information

1. Identification of the Responsible Testing Laboratory

Laboratory Name:	Shenzhen Morlab Communications Technology Co., Ltd.
Laboratory Address:	FL.1-3, Building A, FeiYang Science Park, No.8 LongChang Road, Block 67, BaoAn District, ShenZhen, GuangDong Province, P. R. China
Telephone:	+86 755 36698555
Facsimile:	+86 755 36698525

2. Identification of the Responsible Testing Location

Name:	Shenzhen Morlab Communications Technology Co., Ltd.
Address:	FL.1-3, Building A, FeiYang Science Park, No.8 LongChang Road, Block 67, BaoAn District, ShenZhen, GuangDong Province, P. R. China

3. Facilities and Accreditations

The FCC designation number is CN1192, the test firm registration number is 226174.

Annex B Test Setup Photos

The annex B will be submitted separately.

Annex C Test Results of Distortion and Noise

The annex C will be submitted separately.

Annex D Test Results of Volume Control

The annex D will be submitted separately.

****** END OF MAIN REPORT ******