Thunderbird Headset - Test Report

Customer:	安普新
Project:	**Thunderbird**
Stage:	**DVT2 (Regular turn)**
Antenna:	**AA055U&WW20D0**
Version:	**C**
Release date:	**2024/4/10**

Prepared by:	**Ken Yen**
Checked by:	**Sam Wu**
Approved by:	**Mike Yang**

Report Outline

Unictron Technologies Corp.

1. Background

2. Measurement Setup

2.1 Reflection coefficient measurement

2.2 Radiation pattern measurement

2.3 Mechanical setting

3. Experimental Results

3.1 S Parameters

3.2 Radiation efficiency and peak gain

3.3 3D Gain Pattern

3.4 Conclusion

measurement procedure

Test Date：2024/4/9
Test Engineer: Kin Dai

1、Power on the instrument and preheated for more than 30 minutes.
2、Power on the Anechoic chamber, connect the test cable,
and set up the sample according to the standard.
3、Outline sets the test objectives and conducts calibration tests.
4、Run the software, when the test is completed,
export the corresponding test diagram and test data,
and save them to the corresponding directory.

Equipment List

Equipment information

TYPE OF EQUIPMENT	MODEL NUMBER	SERIAL NUMBER	CALIBRATION DUE DATE
(OTA2-3D ETS Chamber	ETS-844	N/A	N/A
Measurement Software	Maxwell V3.7.1	N/A	N/A
Multi-Axis Positioning System	N/A	N/A	N/A
switch control	MT8862A	SN6262021092	N/A
Network Analyzer	E5071C	MY46107724	2024.07.31

Measurement Setup

Reflection Coefficient Measurement

a. Equipment : Network Analyzer(Agilent E5071A)

b. Test items : S-parameters (Impedance, return loss, VSWR)

Figure. Network Analyzer(Agilent E5071A)

Measurement Setup

Radiation Pattern Measurement

a. Equipment : Anechoic Chamber, Network Analyzer (Agilent E5071C), Standard Horn.

b. Test items : Gain, efficiency, 2D gain pattern, 3D gain pattern

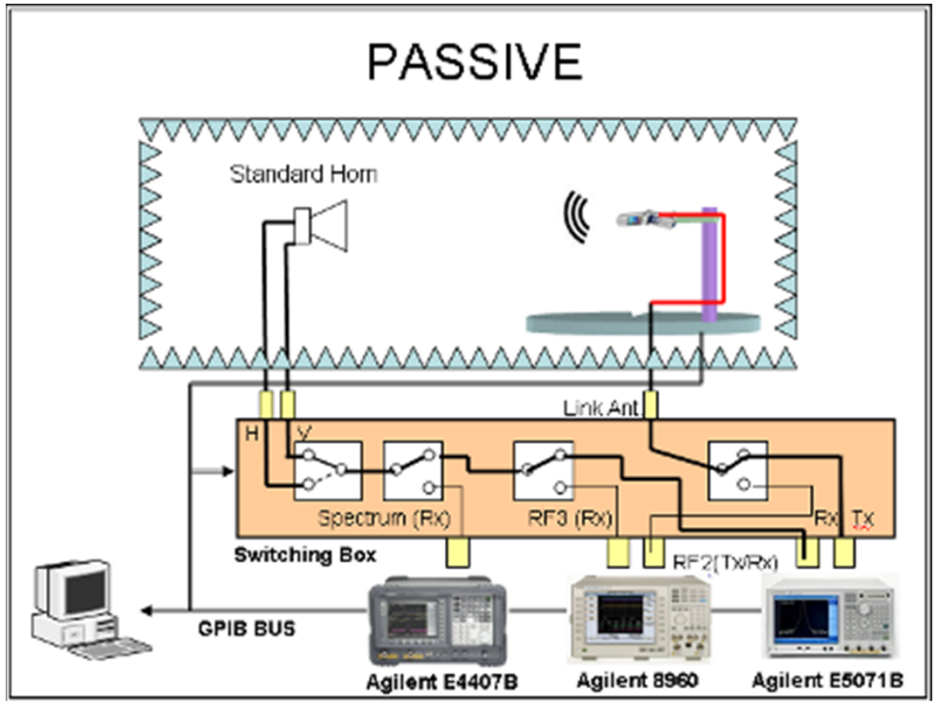

Figure. Scheme of radiation pattern measurement system

Experimental results

S-Parameters - AA055U

Return Loss

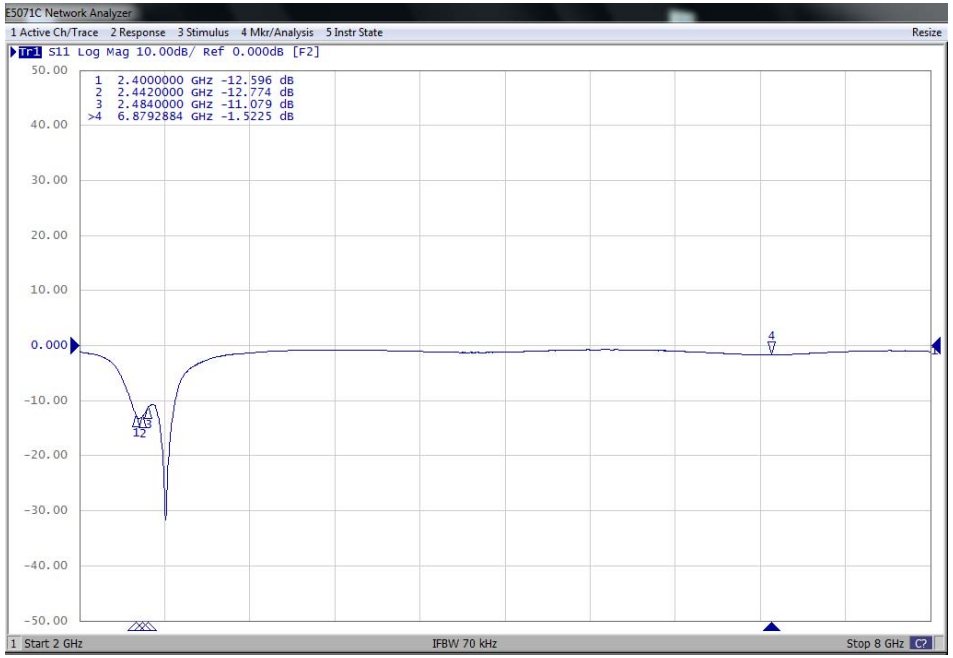

Smith Chart

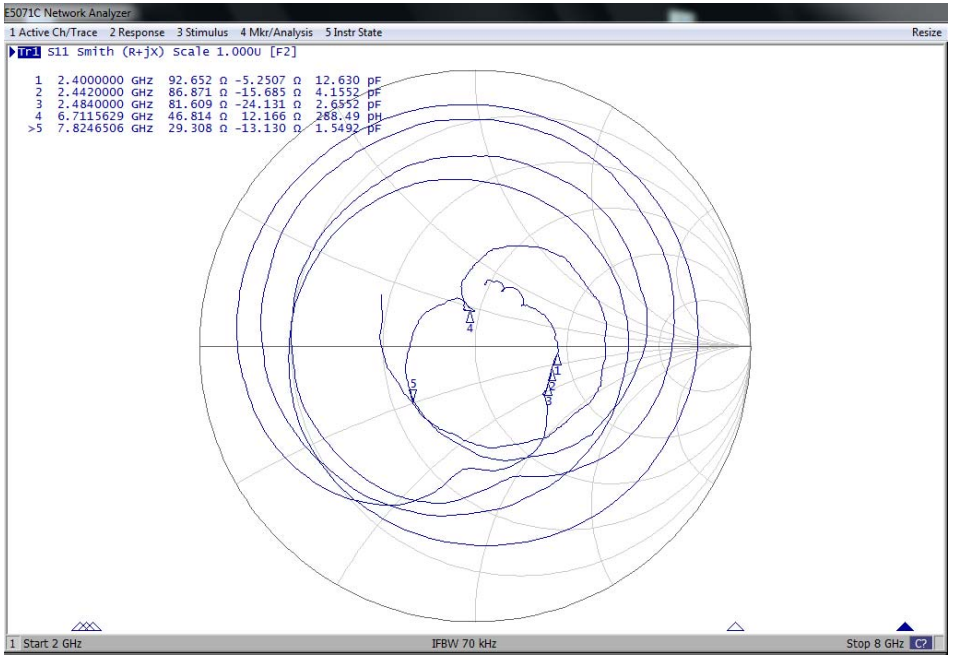

Experimental results

S-Parameters – WW20D0

Return Loss

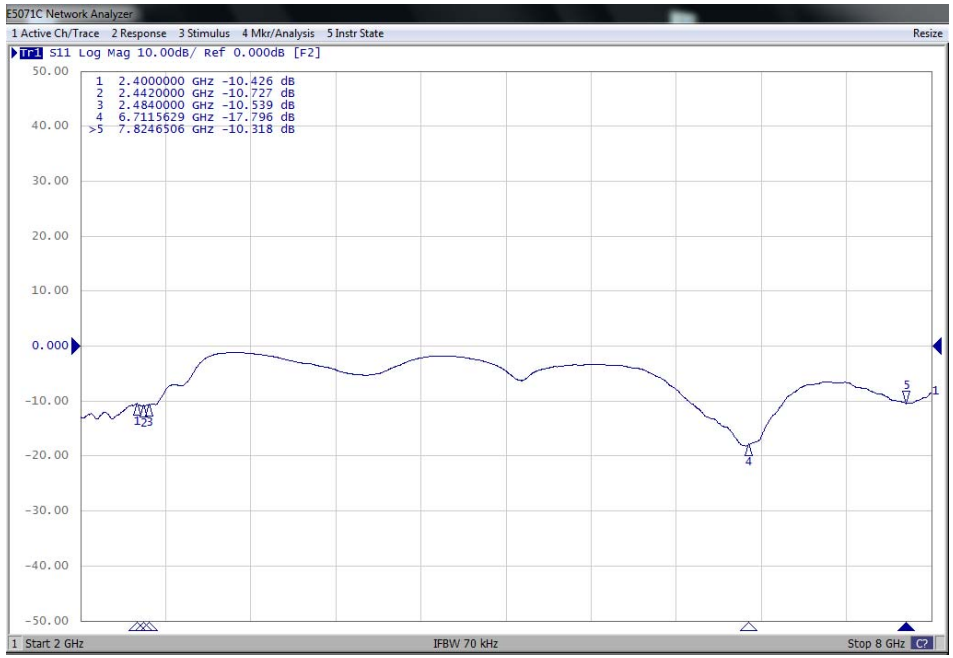

Smith Chart

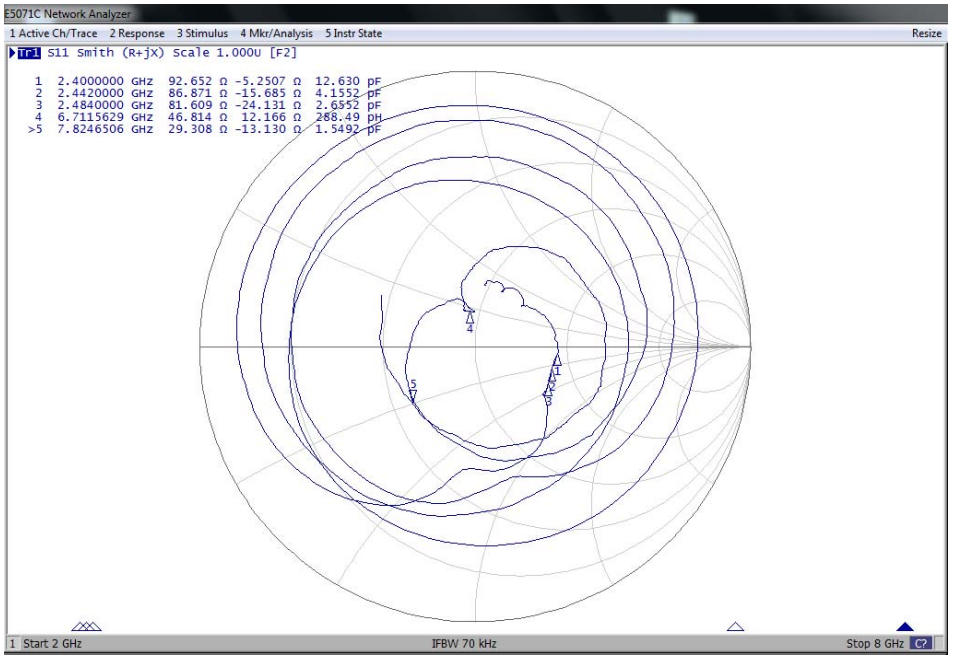

Experimental results

S-Parameters – Isolation

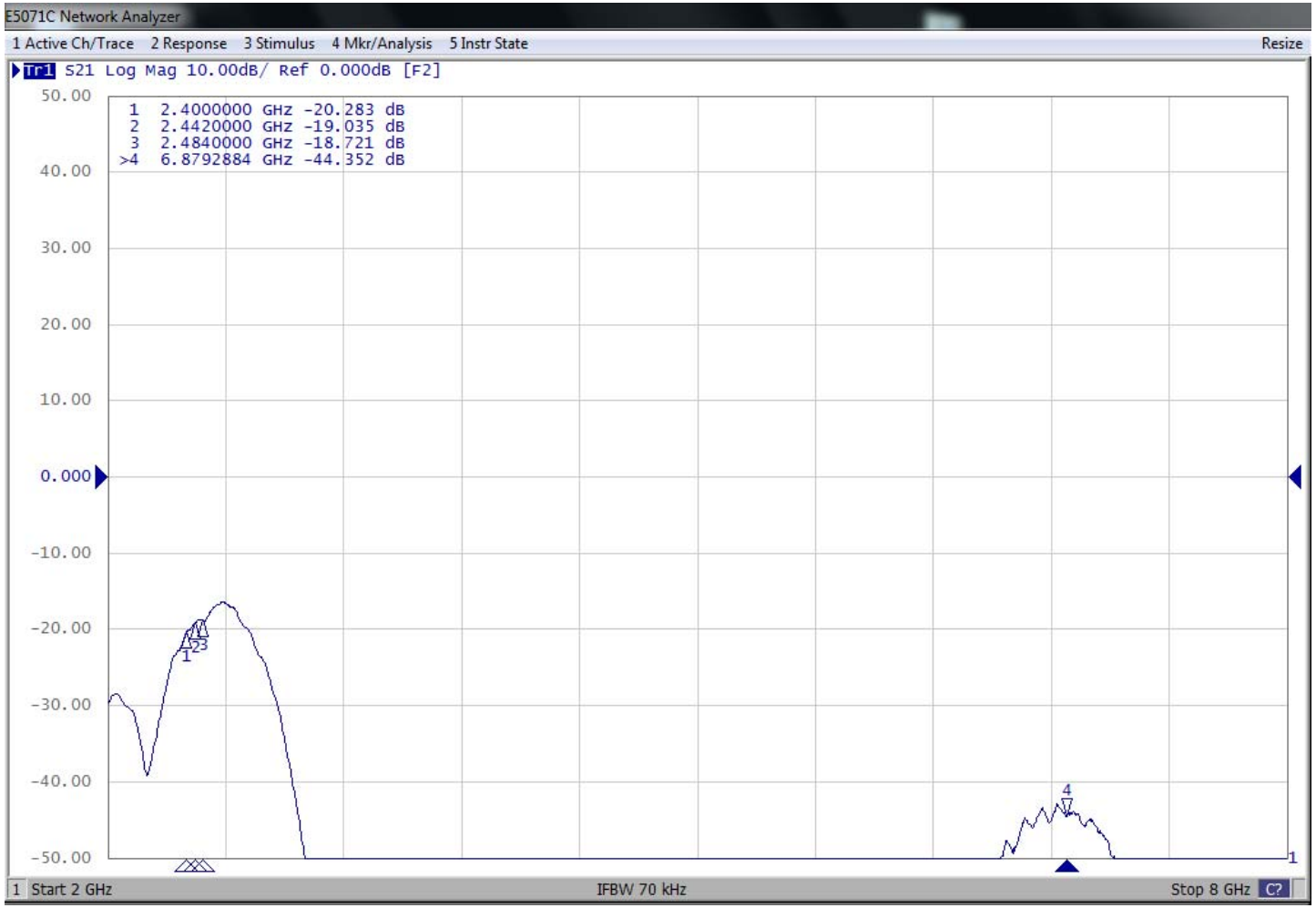

Experimental results

Radiation efficiency and peak gain AA055U

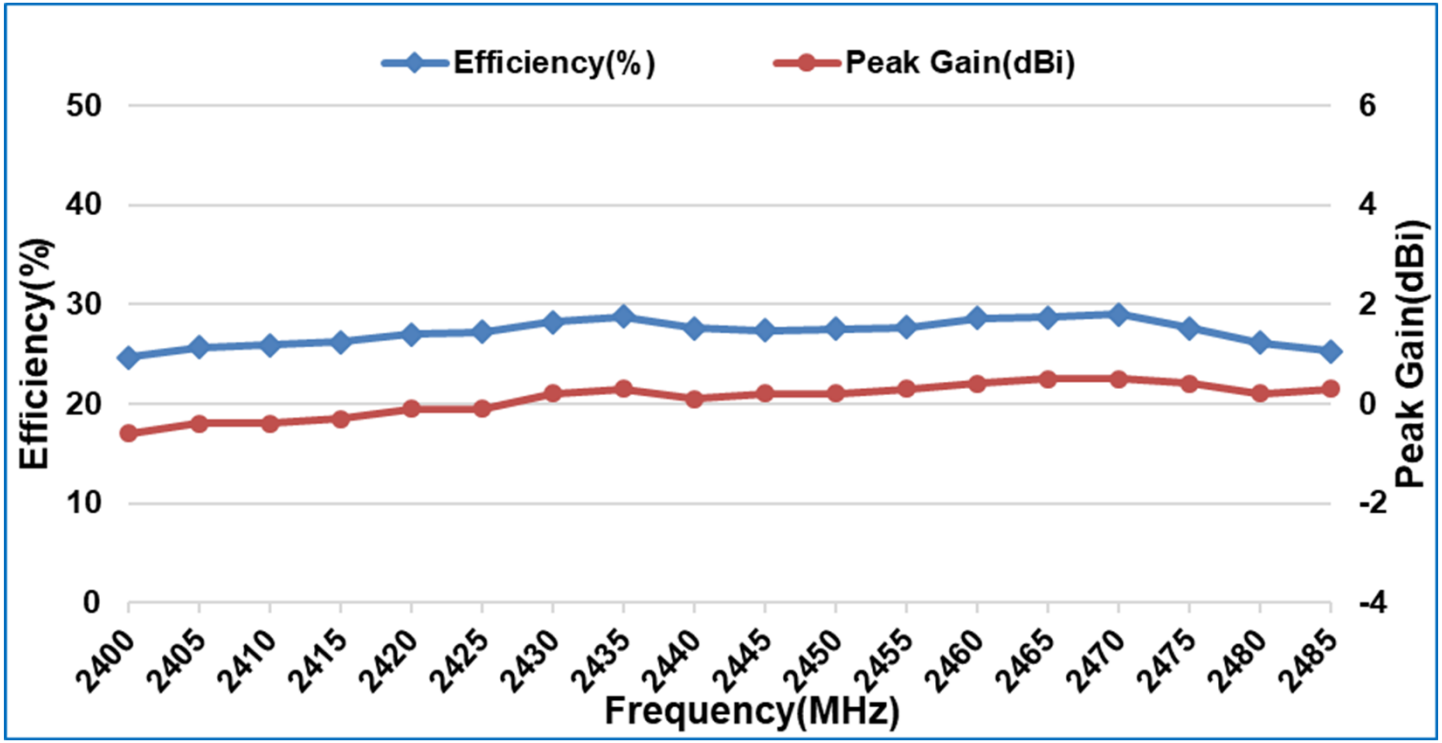

Frequency (MHz)	2400	2405	2410	2415	2420	2425	2430	2435	2440	2445	2450	2455	2460	2465	2470	2475	2480	2485
Efficiency (dB)	-6.1	-5.9	-5.9	-5.8	-5.7	-5.7	-5.5	-5.4	-5.6	-5.6	-5.6	-5.6	-5.4	-5.4	-5.4	-5.6	-5.8	-6.0
Efficiency (%)	24.7	25.7	25.9	26.2	27.0	27.2	28.2	28.8	27.6	27.4	27.5	27.7	28.6	28.7	29.0	27.6	26.1	25.3
Peak Gain (dBi)	-0.6	-0.4	-0.4	-0.3	-0.1	-0.1	0.2	0.3	0.1	0.2	0.2	0.3	0.4	0.5	0.5	0.4	0.2	0.3

Experimental results

Radiation efficiency and peak gain WW20D0

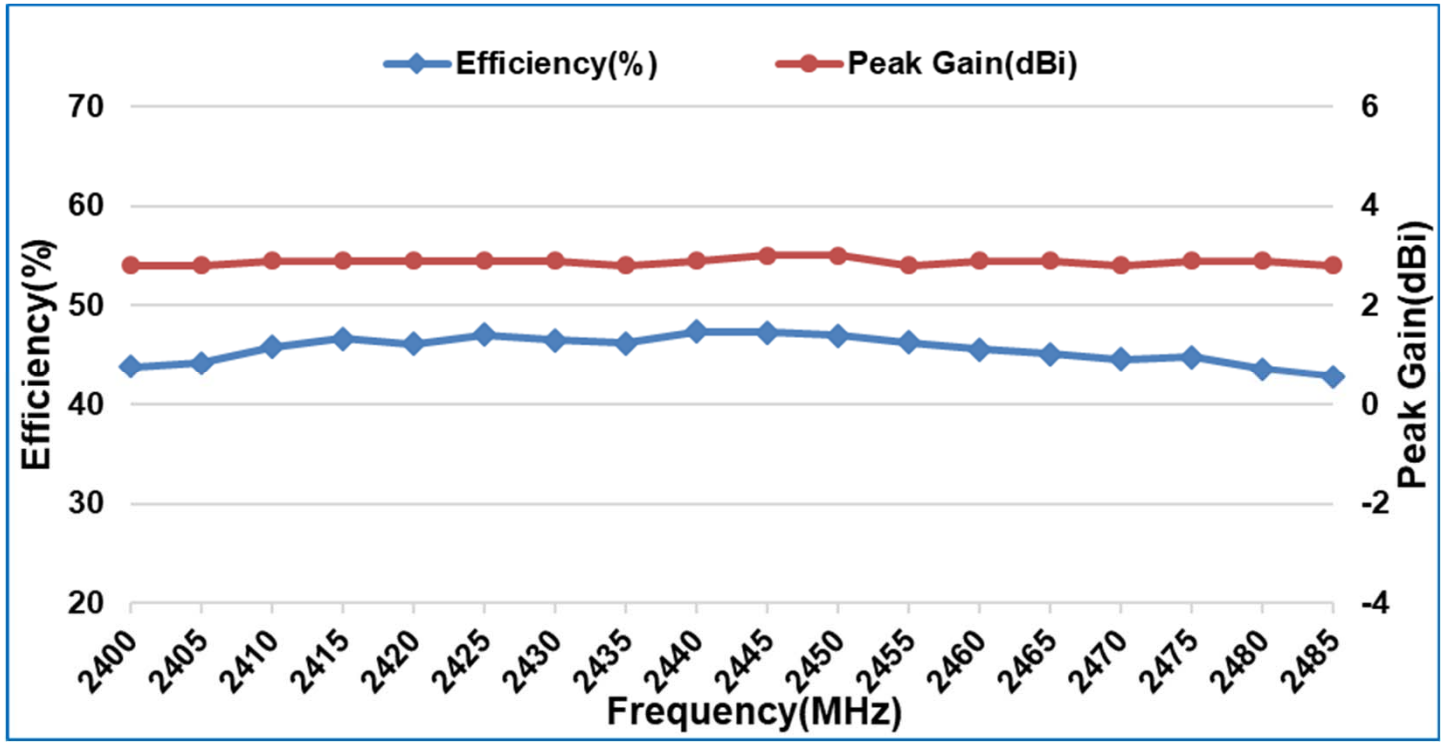

Frequency (MHz)	2400	2405	2410	2415	2420	2425	2430	2435	2440	2445	2450	2455	2460	2465	2470	2475	2480	2485
Efficiency (dB)	-3.6	-3.6	-3.4	-3.3	-3.4	-3.3	-3.3	-3.4	-3.2	-3.3	-3.3	-3.3	-3.4	-3.5	-3.5	-3.5	-3.6	-3.7
Efficiency (%)	43.8	44.2	45.8	46.7	46.1	47.1	46.5	46.2	47.4	47.3	47.0	46.3	45.6	45.1	44.6	44.8	43.6	42.8
Peak Gain (dBi)	2.8	2.8	2.9	2.9	2.9	2.9	2.9	2.8	2.9	3.0	3.0	2.8	2.9	2.9	2.8	2.9	2.9	2.8

Experimental results

3D Gain Pattern-AA055U

Radiation Pattern @ 2442 MHz (unit: dBi)

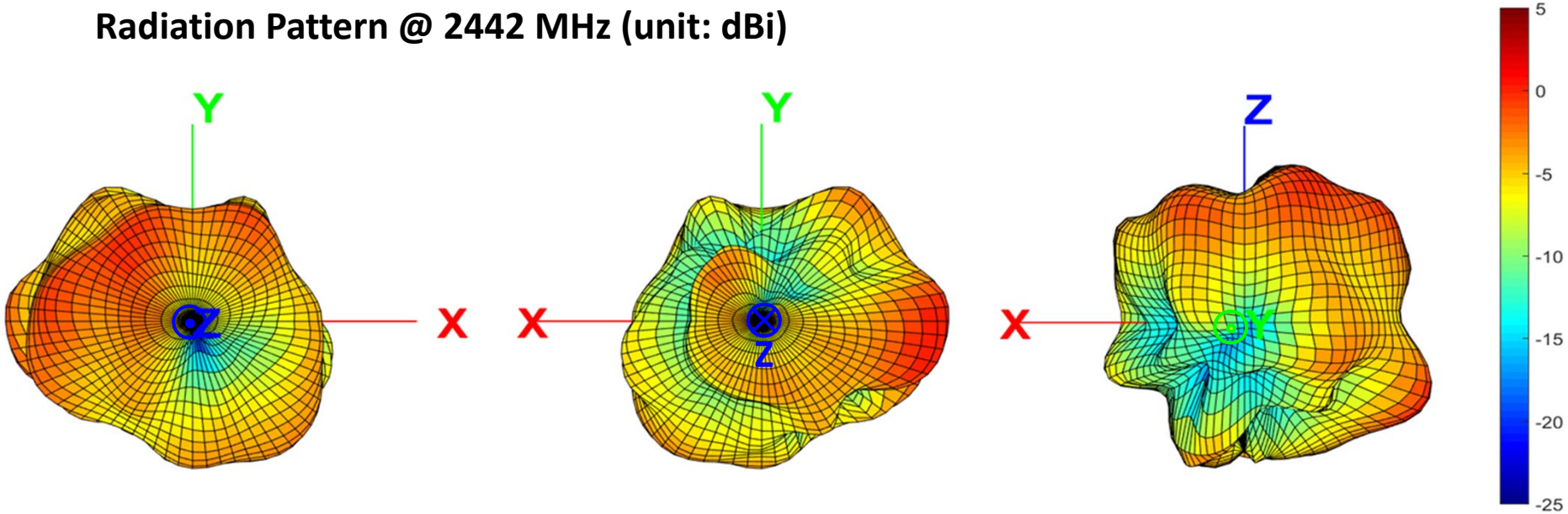

Experimental results

3D Gain Pattern-WW20D0

Radiation Pattern @ 2442 MHz (unit: dBi)

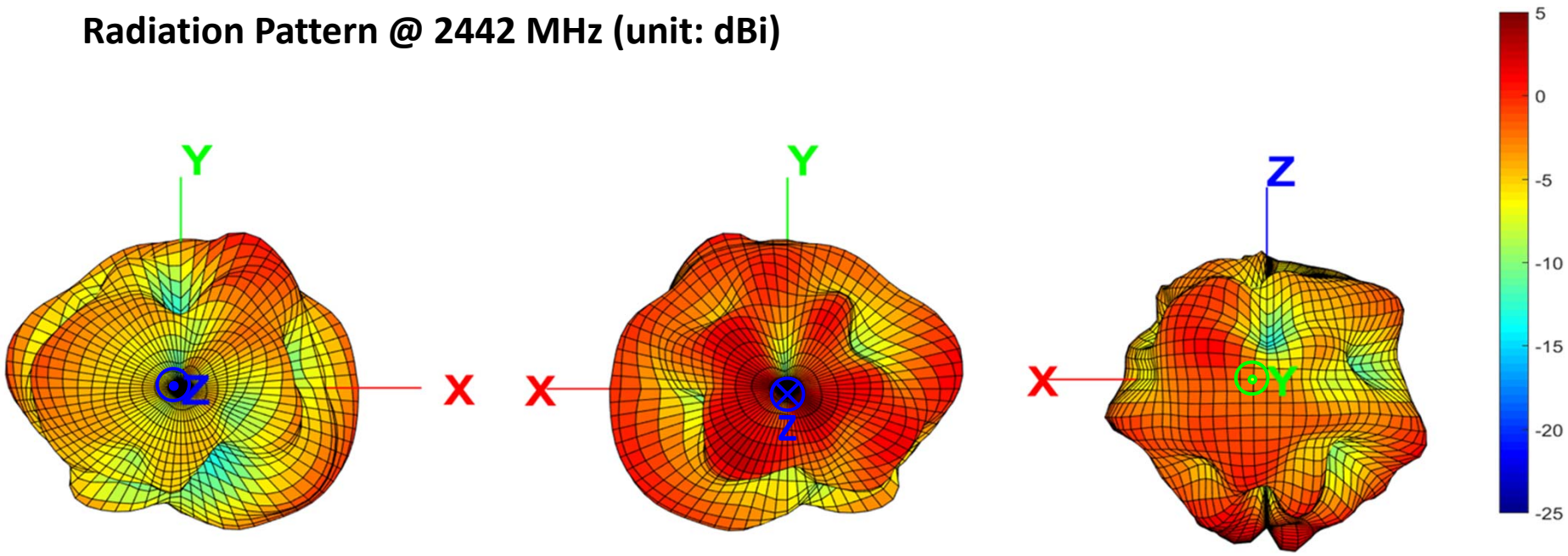

Experimental results

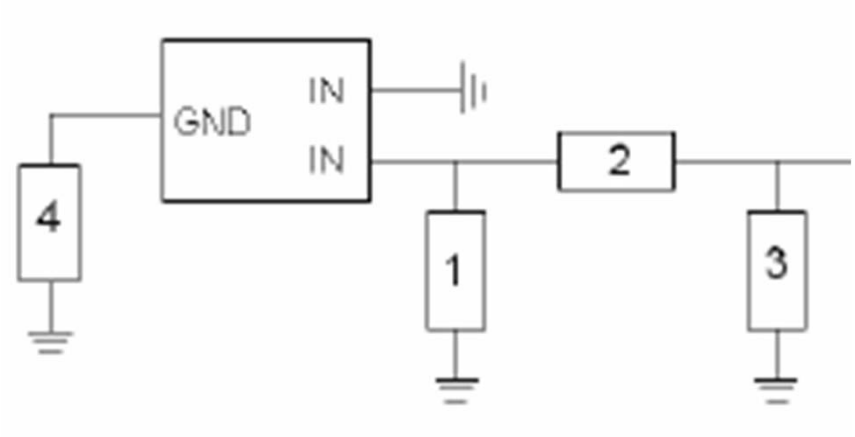

System Matching Circuit Component			
Location	Description	Vendor	P/N
1	N/A	-	-
2	6pF，(0402)	MURATA	GRM1555C1H6R0WA01D
3	3pF，(0402)	MURATA	GRM1555C1H3R0WA01D
4	1.8pF，(0402)	MURATA	GRM1555C1H1R8WA01D

Experimental results

Matching Circuit - WW20D0

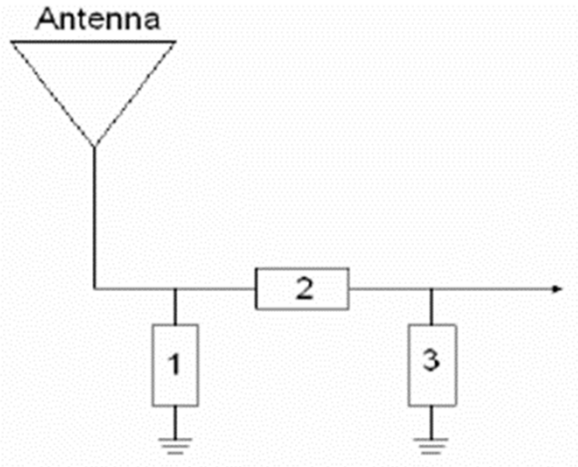

System Matching Circuit Component			
Location	Description	Vendor	Tolerance
1	N/A	-	-
2	0 ohm	-	-
3	N/A	-	-

Conclusion

1. AA055U ANT average efficiency is 27.2%.
   WW20D0 ANT average efficiency is 45.6%.

2. Compared to the report of DVT2 with the quick turn PCB, for the WW20D0 (FPC antenna), we found a change in return loss. After discussing with the AMPACA team, we believe the difference may be due to a change in the wiring method (AMPACS production line has improved the wiring method). However, we do not consider this to be an issue because the return loss still meets the qualification standards.