USER MANUAL

Version 1.0 November 2019

M284 Mobile PC

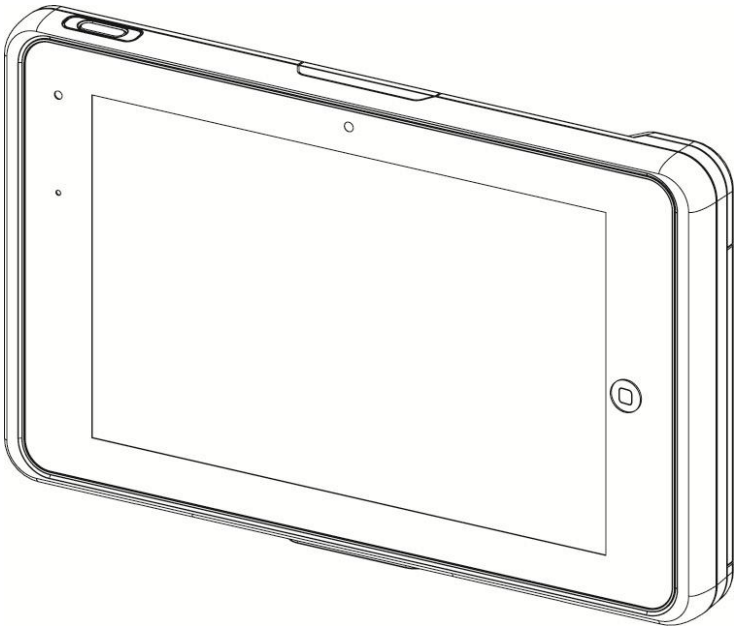

Copyright

Copyright 2019
All Rights Reserved
Manual Version 1.0

The information contained in this document is subject to change without notice.
We make no warranty of any kind with regard to this material, including, but not limited to, the implied warranties of merchantability and fitness for a particular purpose. We shall not be liable for errors contained herein or for incidental or consequential damages in connection with the furnishing, performance, or use of this material.

This document contains proprietary information that is protected by copyright. All rights are reserved. No part of this document may be photocopied, reproduced or translated to another language without the prior written consent of the manufacturer.

TRADEMARK

The material in this manual is subject to change without notice.
Bluetooth is a registered trademark of Bluetooth SIG.
Microsoft®, Windows® and ActiveSync® are either registered trademarks or trademarks of Microsoft Corporation.
All other product or service names are the property of their respective owners.

Safety

Regulatory Information

Caution: Only use approved and UL Listed accessories, battery packs and battery chargers. Do NOT attempt to charge damp/wet mobile computers or batteries. All components must be dry before connecting to an external power source.

Power Supply

Use only the approved power supply output rated 12 Vdc and minimum 3 A. The power supply is certified to EN60950-1 or EN62368-1 with SELV outputs. Use of alternative power supply will invalidate any approval given to this device and may be dangerous.

Warning for Use of Wireless Devices

Please observe all warning notices with regard to the usage of wireless devices.

Potentially Hazardous Atmospheres

You are reminded of the need to observe restrictions on the use of radio devices in fuel depots, chemical plants etc. and areas where the air contains chemicals or particles (such as grain, dust, or metal powders)
and any other area where you would normally be advised to turn off your vehicle engine.

Safety in Aircraft

Switch off your wireless device whenever you are instructed to do so by airport or airline staff.

Pacemakers

Pacemaker manufacturers recommended that a minimum of 15cm (6 inches) be maintained between a handheld wireless device and a pacemaker to avoid potential interference with the pacemaker. These recommendations are consistent with independent research and recommendations by Wireless Technology Research.

Persons with Pacemakers

Persons with Pacemakers should ALWAYS keep the device more than 15cm (6 inches) from their pacemaker when turned ON and hence they should not carry the device in a breast pocket .
Should use the ear furthest from the pacemaker to minimize the potential for interference.
If you have any reason to suspect that interference is taking place, turn OFF your device.

Hearing Aids

The wireless device may interfere with some hearing aids. In the event of interference you may want to consult your hearing aid supplier to discuss solutions.

Other Medical Devices

Please consult your physician or the manufacturer of the medical device, to determine if the operation of your wireless product may interfere with the medical device.

FCC/EU RF Exposure Guidelines

FCC Statement

This equipment has been tested and found to comply with the limits for a Class B digital device, pursuant to part 15 of the FCC Rules. These limits are designed to provide reasonable protection against harmful interference in a residential installation. This equipment generates, uses and can radiate radio frequency energy and, if not installed and used in accordance with the instructions, may cause harmful interference to radio communications. However, there is no guarantee that interference will not occur in a particular installation. If this equipment does cause harmful interference to radio or television reception, which can be determined by turning the equipment off and on, the user is encouraged to try to correct the interference by one or more of the following measures:

- Reorient or relocate the receiving antenna.
- Increase the separation between the equipment and receiver.
- Connect the equipment into an outlet on a circuit different from that to which the receiver is connected.
- Consult the dealer or an experienced radio/TV technician for help.

This device complies with FCC SAR exposure limits set forth for an uncontrolled environment.

This device complies with Part 15 of the FCC Rules. Operation is subject to the following two conditions: (1) this device may not cause harmful interference, and (2) this device must accept any interference received, including interference that may cause undesired operation.

Caution!

Any changes or modifications not expressly approved by the party responsible for compliance could void the user's authority to operate the equipment.

CE Marking and European Economic Area

The use of 2.4GHz WLAN's, for use through the EEA, have the following restrictions:

- Maximum radiated transmit power of 100 mW EIRP in the frequency range 2.400 -2.4835 GHz
- France, outside usage is restricted to 2.4 - 2.454 GHz.
- Italy requires a user license for outside usage.

For class 2 device (supporting WLAN 5GHz: 5150-5350 MHz)
The device is restricted to indoor use only when operating in the 5150 to 5350 MHz frequency range in the following countries:

	AT	BE	BG	HR	CY	CZ	DK
	EE	FI	FR	DE	EL	HU	IE
	IT	LV	LT	LU	MT	NL	PL
	PT	RO	SK	SI	ES	SE	UK

Bluetooth® Wireless Technology for use through the EEA has the following restrictions:

- Maximum radiated transmit power of 100mW EIRP in the frequency range 2.400 -2.4835 GHz
- France, outside usage is restricted to 10mW EIRP
- Italy requires a user license for outside usage.

Battery Information

Our rechargeable battery packs are designed and constructed to the highest standards within the industry.
However, there are limitations to how long a battery can operate or be stored before needing replacement.
Many factors affect the actual life cycle of a battery pack, such as heat, cold, harsh environmental conditions and severe drops.
When batteries are stored over six (6) months, some irreversible deterioration in overall battery quality may occur. Store batteries discharged in a dry, cool place, removed from the equipment to prevent loss of capacity, rusting of metallic parts and electrolyte leakage. When storing batteries for one year or longer, they should be charged and discharged at least once a year. If an electrolyte leakage is observed, avoid any contact with affected area and properly dispose of the battery. Batteries must be charged within the 32° to 95° F (0° to +35° C) ambient temperature range.
Replace the battery when a significant loss of run time is detected.

⚠ Battery Caution

Risk of explosion if battery is replaced by an incorrectly type.
Dispose of used battery according to the local disposal instructions.

Waste Electrical and Electronic Equipment (WEEE)

English: For EU Customers: All products at the end of their life must be returned to the reseller for recycling.

Notational Conventions

The following conventions are used in this document:

- Italics are used to highlight specific items in the general text, and to identify chapters and sections in this and related documents.
- bullets (•) indicate:
  - action items
  - lists of alternatives
  - lists of required steps that are not necessarily sequential
  - Sequential lists (e.g., those that describe step-by-step procedures) appear as numbered lists.

NOTE This symbol indicates something of special interest or importance to the reader. Failure to read the note will not result in physical harm to the reader, equipment or data.

CAUTION This symbol indicates that if this information is ignored, the possibility of data or material damage may occur.

WARNING! This symbol indicates that if this information is ignored the possibility that serious personal injury may occur.

Revision History

Version	Date	Description
1.0	November 2019	Initial release

Table of Contents

1 Item Checklist 9

1-1 Standard Items 9
1-2 Optional Items 9

2 System View 11

2-1 Front View 11
2-2 Rear View 12
2-3 Specification 13

3 Getting Started 15

3-1 Power On/Off the System 15
3-2 Charging the Battery 15
3-3 Replacing the Battery 16
3-4 Installing Peripheral Kits 16
3-5 Using the Charging Cradle 17
3-6 Attaching the Hand Strap 17

4 BIOS Setup 18

1 Item Checklist

1-1 Standard Items

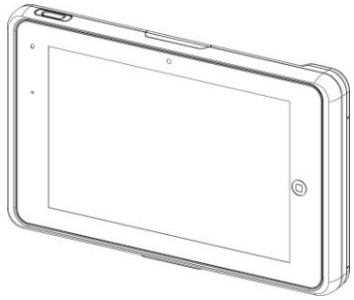	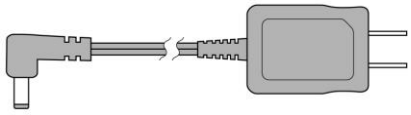
a. System	b. 36W power adapter
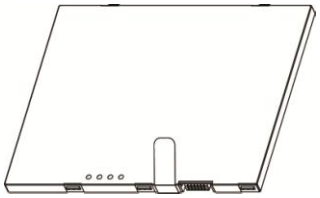	
c. Battery	

1-2 Optional Items

	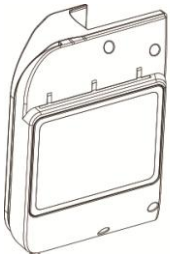
a. MSR	b. VP3300

	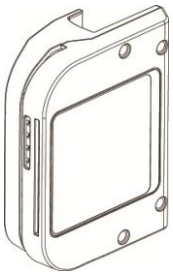
c. Augusta	d. Ingenico
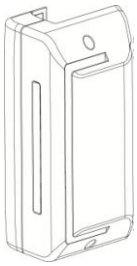	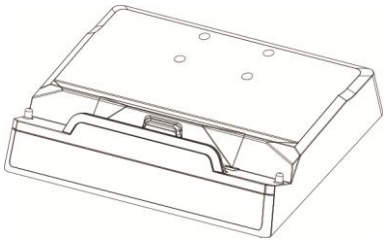
e. Mini Smart Card II	f. Charging cradle
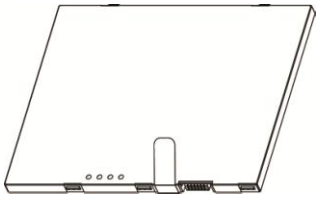	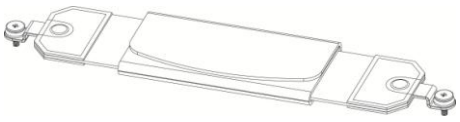
g. Battery x 4	h. Hand strap

2 System View

2-1 Front View

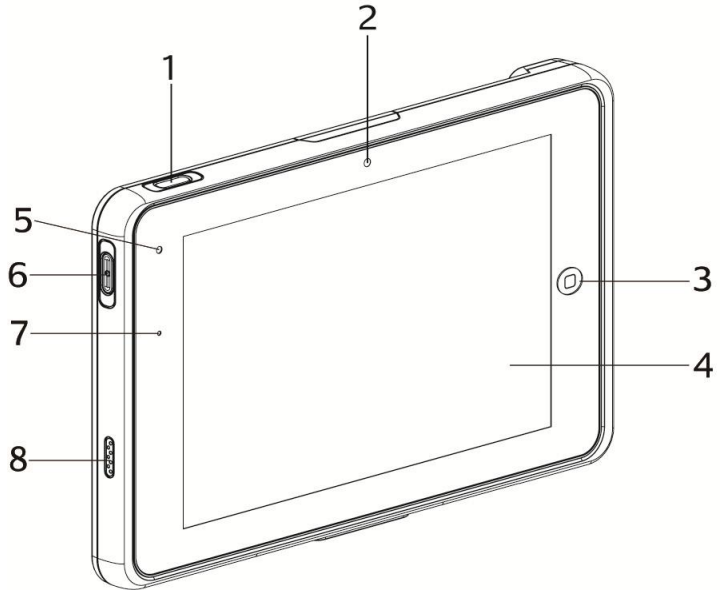

No.	Description
1	Power On/Off
2	2MP Webcam
3	Programmable capacitive function key
4	Touch screen
5	Ambient light sensor
6	2D scanner button
7	Battery status indicator
8	Speaker

2-2 Rear View

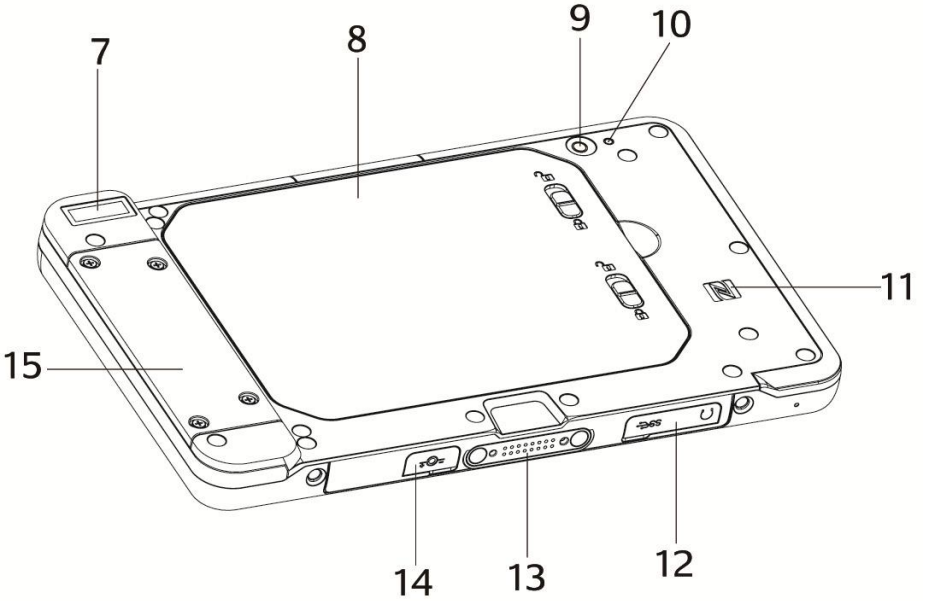

No.	Description
7	2D scanner
8	Battery cover
9	5MP AF camera
10	LED flash
11	Location of internal NFC antenna
12	Access cover for audio jack and USB port
13	Docking connector
14	DC-in
15	Dummy cover of peripheral kits

2-3 Specification

System	M284
Motherboard	**D42**
CPU	Cherry Trail X7-Z8750
System memory	4GB LPDDR3
Flash memory	64G eMMC
LCD Touch Panel	
LCD size	8” ” IPS LCD
Brightness	500 nits
Resolution	1280 x 1920
Touch screen	P-CAP 10 points Multi-touch
Wireless Networking	
Wireless LAN	802.11 a/b/g/n/ac
Bluetooth	4.0+LE, Class 2
NFC	13.56 MHz, compatible with ISO 15693, ISO 14443A, ISO 14443B (optional)
4G/LTE	1x 4G LTE Sierra EME7455 single antenna (optional)
External I/O Ports	
USB	1x USB-C 3.0 (+ USB2.0 host and OTG for Android)
MiC	1 (build-in
Audio jack	1 (optional)
DC charging connector	1x (12V/3A) [support quick charging]
Internal I/O Ports	
SIM card socket	1x Nano SIM card socket
POGO Pin	
Pin definition	16-pin pogo machine connector for DC-in(charging), USB2.0, USB 3.0 etc. signal
Audio	
Speaker	1x 1W speaker with chamber 1x internal microphone for noise suppression
Control / Indicator	
Power Button	1
Hotkey	1x (default is 2D barcode scanner trigger)
Sensor	Ambient light sensor, Hall sensor, Gyro sensor, G sensor
Vibration	Built-in vibration motor
LED Indicator	1x (Power/Battery status indicator)
Camera	
Front camera	2MP fixed focus camera – USB I/F (optional)
Rear camera	5MP auto focus camera with LED flash – MIPI CSI
RF Antenna	
Antenna	WiFi/BT x2 LTE x2 w/ SAR(optional)

System	M284
Motherboard	**D42**
Accessories	
Hand strap	1 (optional)
Battery & Power	
Battery	1S2P, 3.85V, 28.69W, 7454 mAh
Hot swap battery	300mAh, 3C discharge for swappable
Power adapter	12V/36W for tablet charging only
Peripherals	
Charging kits	Charging cradle/ Premium stand/ 5-bay battery charger/ 5-bay tablet charger VP3300/ Ingenico RP457c/ MSR/ Agusta/ MiniSmart II
Certificate	
EMC & Safety	FCC Class B
Environment	
Dust & Water proof	IP65 w/o Kits
Fall security	1.2m drop w/o Kits
ESD	8kV contact discharge, 15kV air discharge
Operating temperature (None charging mode)	0°C ~ 40°C (32°F ~104 °F)
Operating temperature (charging mode)	0°C ~ 35°C (32 °F ~ +95 °F)
Storage temperature	-20°C ~ 60°C (-4°F ~ 140°F)
Humidity	20% - 80% RH non-condensing
Size	
Dimension	236 x 147.8 x 17.3 mm
Weight	660g
OS Support	Windows 10 IoT Enterprise / Android 7.x

3 Getting Started

3-1 Power On/Off the System

1. Push the power button 1 second to turn on the system and hold 4 seconds to turn off the system.

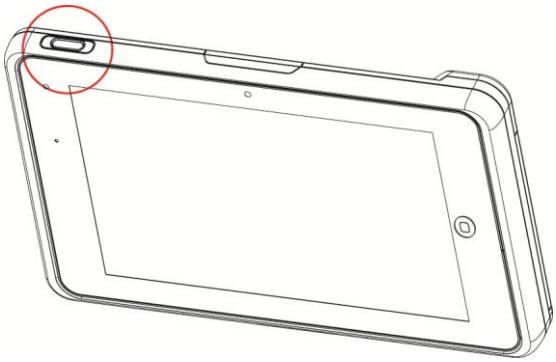

***Note*:** For best touch performance, remove the protective plastic overlay from the LCD screen by peeling it away from one of the corners. Be sure to use a soft pointing device or finger tip to avoid scratching the screen during normal use.

3-2 Charging the Battery

1. To charge the battery, pry open the rubber cover protecting the DC-in port and plug in the AC adaptor cable supplied with the tablet.

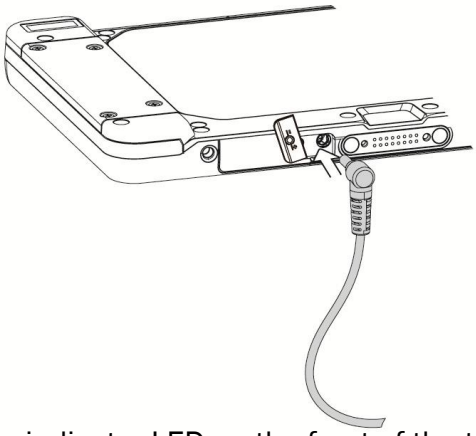

Power level is indicated by the battery status indicator LED on the front of the tablet.

GREEN – Battery fully charged(Tablet is plugged in or placed in dock)

ORANGE – Battery charging(Tablet is plugged in or placed in dock)

RED/Flashing – Battery is low

RED – Battery nearly depleted

3-3 Replacing the Battery

1. Power off the tablet. Unplug the AC cable if connected directly to the DC-in port on the tablet. Place the tablet face down on a flat surface. Next, slide the latches up as shown to unlock and release the battery cover.

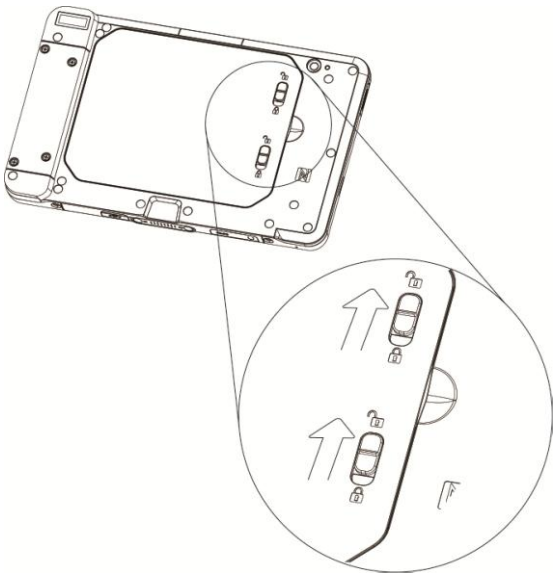

2. A plastic tab is attached to the battery module. For easier removal pull the plastic tab upwards to release the battery from the unit.

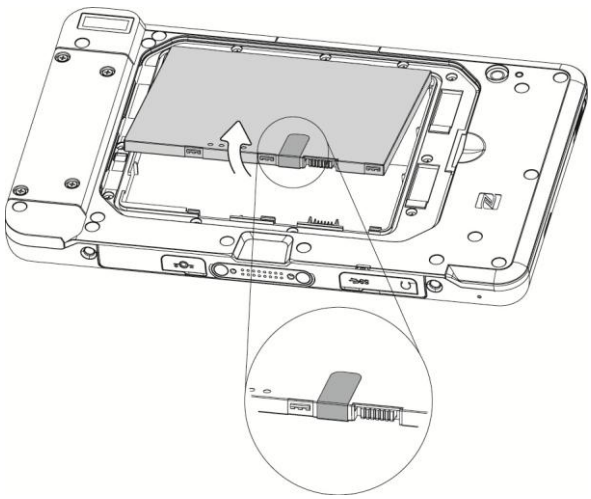

3-4 Installing Peripheral Kits

1. Remove the screws (x4) to release the dummy cover first.

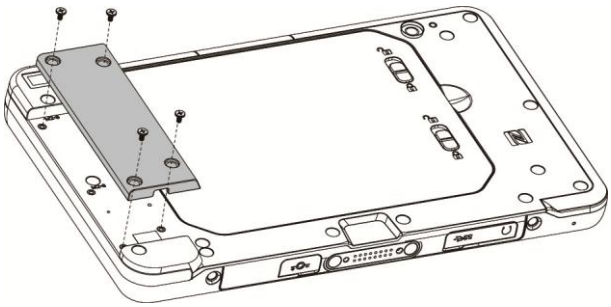

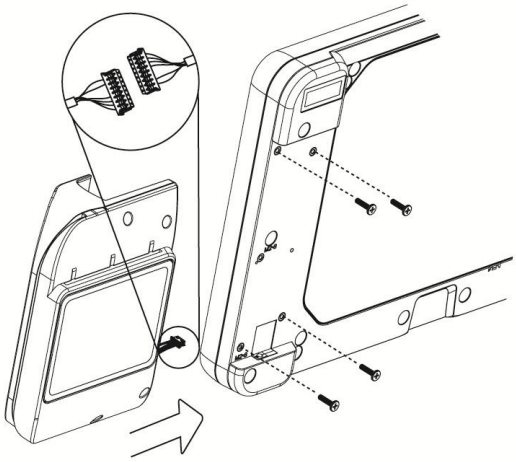

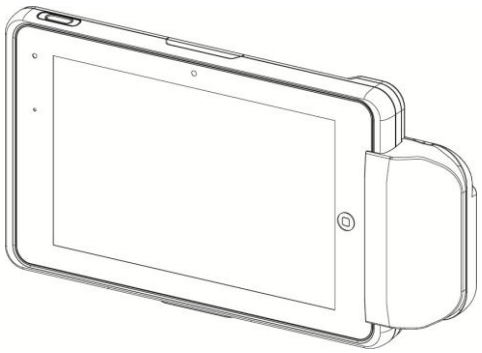

2. Connect the cable to the connector on the system side.
3. Insert the peripheral module in place and fasten the screws (x4) on the back to secure the module.

Note: The variety of peripheral kits (MSR, VP3300, Augusta, Ingenico, and Mini Smart Card II) all follow the same installation method.

3-5 Using the Charging Cradle

1. To charge your M284 tablet, slide it into the cradle slot. Then connect the AC adapter to the DC-in input and connect the other end to the power outlet.

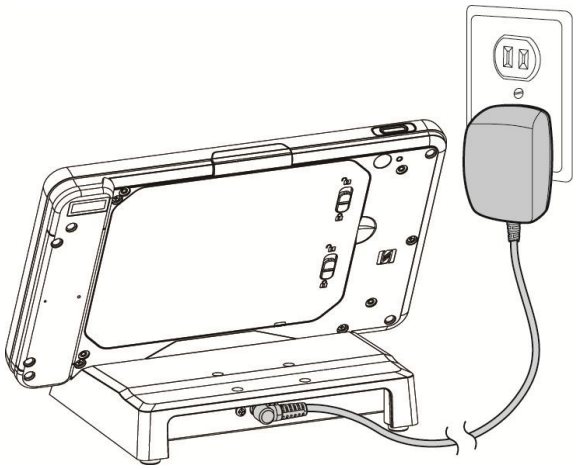

3-6 Attaching the Hand Strap

1. Align and attach the hand strap to the back side of the tablet and fasten the screws (x2) to secure it.

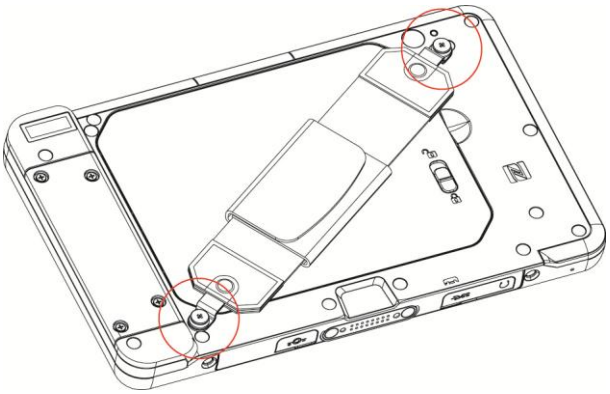

4 BIOS Setup

Entering the BIOS Setup

1. Press **Win** key to bring out Windows 10 Start menu. Then choose Settings.
2. Select **Update & security**.
3. In the column on the left, select **Recovery**. Then, on the right, look for the **Restart now** button, then tap on it.
4. Windows 10 will quickly restart and display the blue screen. Choose **Troubleshoot.**
5. On the next screen, select **Advanced options.**
6. Select UEFI Firmware Settings option.
7. Click Restart to restart your system again. Then Windows will restart and boot to BIOS.
8. After entering the BIOS Setup menu, connect a USB keyboard. Using the arrow keys to select the system functions.

Vibration Control Setting

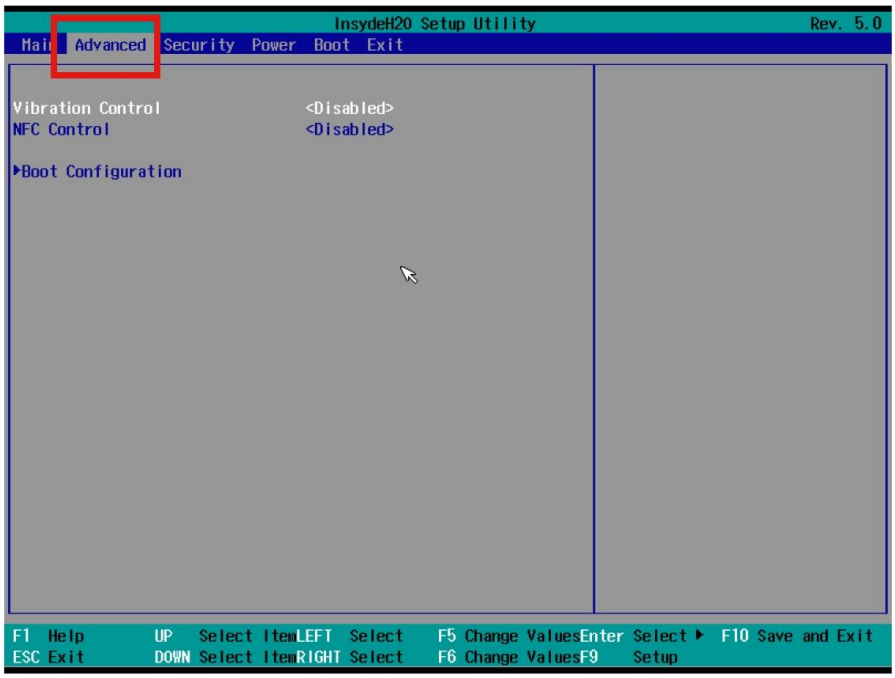

Step 1: After entering the BIOS setup utility, select **Advanced** tab.

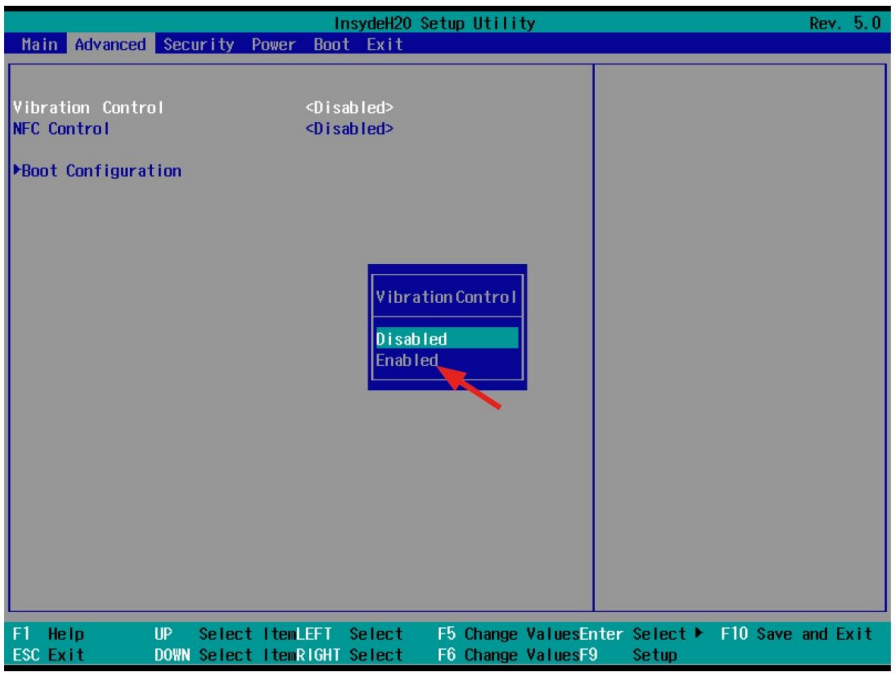

Step 2: Select **Vibration Control** to go to display available options.

Step 3: By default, the vibration option is **disabled** in the BIOS. To turn on the vibration, tap on **Enabled** to confirm.

NFC Control Setting

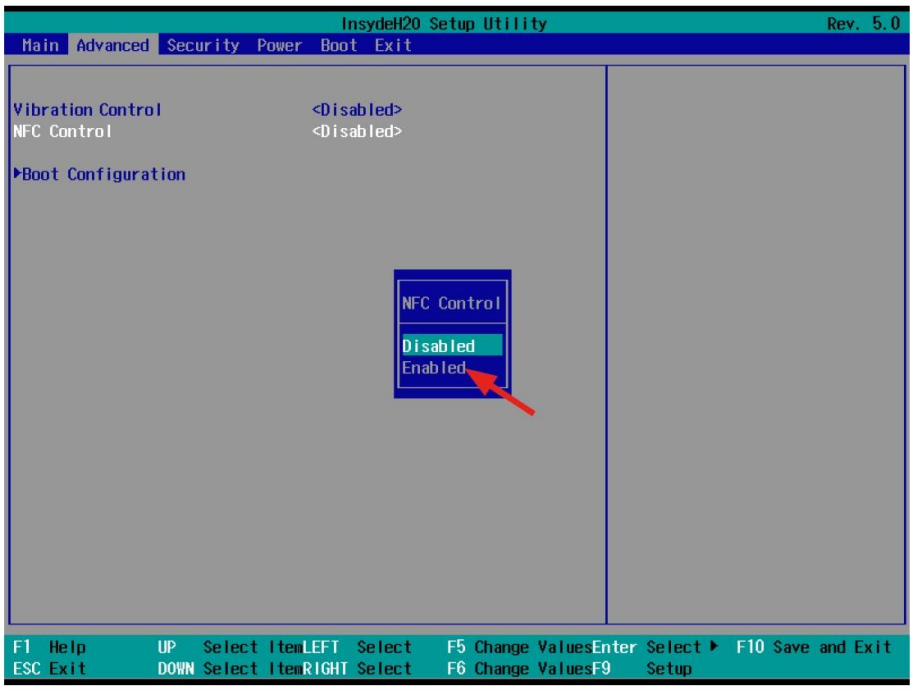

Step 1: Select **NFC Control** to go to display available options.

Step 2: By default, the NFC is **disabled** in the BIOS. Enable NFC by selecting **Enabled.**