USER MANUAL

VERSION 1.0 March, 2016

T635M
Hardware System

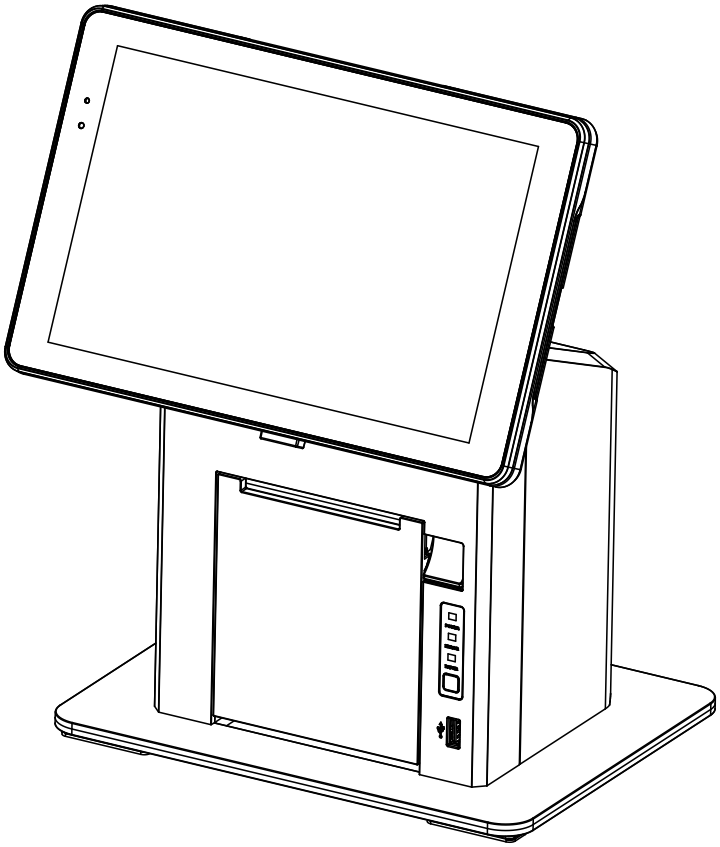

Copyright 2016
All Rights Reserved
Manual Version 1.0
Part Number:

The information contained in this document is subject to change without notice.
We make no warranty of any kind with regard to this material, including, but not limited to, the implied warranties of merchantability and fitness for a particular purpose. We shall not be liable for errors contained herein or for incidental or consequential damages in connection with the furnishing, performance, or use of this material.

This document contains proprietary information that is protected by copyright. All rights are reserved. No part of this document may be photocopied, reproduced or translated to another language without the prior written consent of the manufacturer.

Safety

IMPORTANT SAFETY INSTRUCTIONS

1. To disconnect the machine from the electrical power supply, turn off the power switch and remove the power cord plug from the wall socket. The wall socket must be easily accessible and in close proximity to the machine.
2. Read these instructions carefully. Save these instructions for future reference.
3. Follow all warnings and instructions marked on the product.
4. Do not use this product near water.
5. Do not place this product on an unstable cart, stand, or table. The product may fall, causing serious damage to the product.
6. Slots and openings in the cabinet and the back or bottom are provided for ventilation to ensure reliable operation of the product and to protect it from overheating. These openings must not be blocked or covered. The openings should never be blocked by placing the product on a bed, sofa, rug, or other similar surface. This product should never be placed near or over a radiator or heat register or in a built-in installation unless proper ventilation is provided.
7. This product should be operated from the type of power indicated on the marking label. If you are not sure of the type of power available, consult your dealer or local power company.
8. Do not allow anything to rest on the power cord. Do not locate this product where persons will walk on the cord.
9. Never push objects of any kind into this product through cabinet slots as they may touch dangerous voltage points or short out parts that could result in a fire or electric shock. Never spill liquid of any kind on the product.

CE MARK

This device complies with the requirements of the EEC directive 2004/108/EC with regard to “Electromagnetic compatibility” and 2006/95/EC “Low Voltage Directive”.

FCC

FCC Radiation Exposure Statement

This device complies with part 15 of the FCC rules. Operation is subject to the following two conditions:
(1) This device may not cause harmful interference.
(2) This device must accept any interference received, including interference that may cause undesired operation.

FCC Statement

This equipment has been tested and found to comply with the limits for a Class B digital device, pursuant to part 15 of the FCC rules. These limits are designed to provide reasonable protection against harmful interference in a residential installation. This equipment generates, uses and can radiate radio frequency energy and, if not installed and used in accordance with the instructions, may cause harmful interference to radio communications. However, there is no guarantee that interference will not occur in a particular installation. If this equipment does cause harmful interference to radio or television reception, which can be determined by turning the equipment off and on, the user is encouraged to try to correct the interference by one or more of the following measures:

- Reorient or relocate the receiving antenna.
- Increase the separation between the equipment and receiver.
- Connect the equipment into an outlet on a circuit different from that to which the receiver is connected.
- Consult the dealer or an experienced radio/TV technician for help.
- This device complies with FCC SAR exposure limits set forth for an uncontrolled environment.

Caution!

Any changes or modifications not expressly approved by the party responsible for compliance could void the user's authority to operate the equipment.
This device complies with FCC SAR exposure limits set forth for an uncontrolled environment.

Safety Caution

Note: To comply with IEC60950-1 Clause 2.5 (limited power sources, L.P.S) related legislation, peripherals shall be 4.7.3.2 "Materials for fire enclosure" compliant.

4.7.3.2 Materials for fire enclosures
For MOVABLE EQUIPMENT having a total mass not exceeding 18kg.the material of a FIRE ENCLOSURE, in the thinnest significant wall thickness used, shall be of V-1 CLASS MATERIAL or shall pass the test of Clause A.2.
For MOVABLE EQUIPMENT having a total mass exceeding 18kg and for all STATIONARY EQUIPMENT, the material of a FIRE ENCLOSURE, in the thinnest significant wall thickness used, shall be of 5VB CLASS MATERIAL or shall pass the test of Clause A.1
This product should not be mixed with other commercial wastes for disposal.

LEGISLATION AND WEEE SYMBOL

2012/19/EU Waste Electrical and Electronic Equipment Directive on the treatment, collection, recycling and disposal of electric and electronic devices and their components.

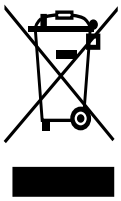

The crossed dust bin symbol on the device means that it should not be disposed of with other household wastes at the end of its working life. Instead, the device should be taken to the waste collection centers for activation of the treatment, collection, recycling and disposal procedure.
To prevent possible harm to the environment or human health from uncontrolled waste disposal, please separate this from other types of wastes and recycle it responsibly to promote the sustainable reuse of material resources.

Household users should contact either the retailer where they purchased this product, or their local government office, for details of where and how they can take this item for environmentally safe recycling.

Business users should contact their supplier and check the terms and conditions of the purchase contract.

Revision History

Changes to the original user manual are listed below:

Revision	Description	Date
1.0	• Initial release	March, 2016

Table of Contents

1. Packing List 1

1-1. Standard Accessories 1

2. System View 2

2-1. Touch Panel 2
2-2. Touch Pamel with Printer Stand 3
2-3. Dimensions 4
2-4. IO Port View 5

3. System Assembly & Disassembly 6

3-1. Install Touch Panel to Printer Stand 6
3-2. Install the Power Adapter 6
3-3. Connect iPad Jacket to Printer Stand 8
3-4. Remove Touch Panel from Printer Stand 8
3-5. Load the Thermal Printer Paper 12

4. Specifications 13

5. Jumper Settings 14

Appendix: API Information 15

The page is intentionally left blank.

1. Packing List

1-1. Standard Accessories

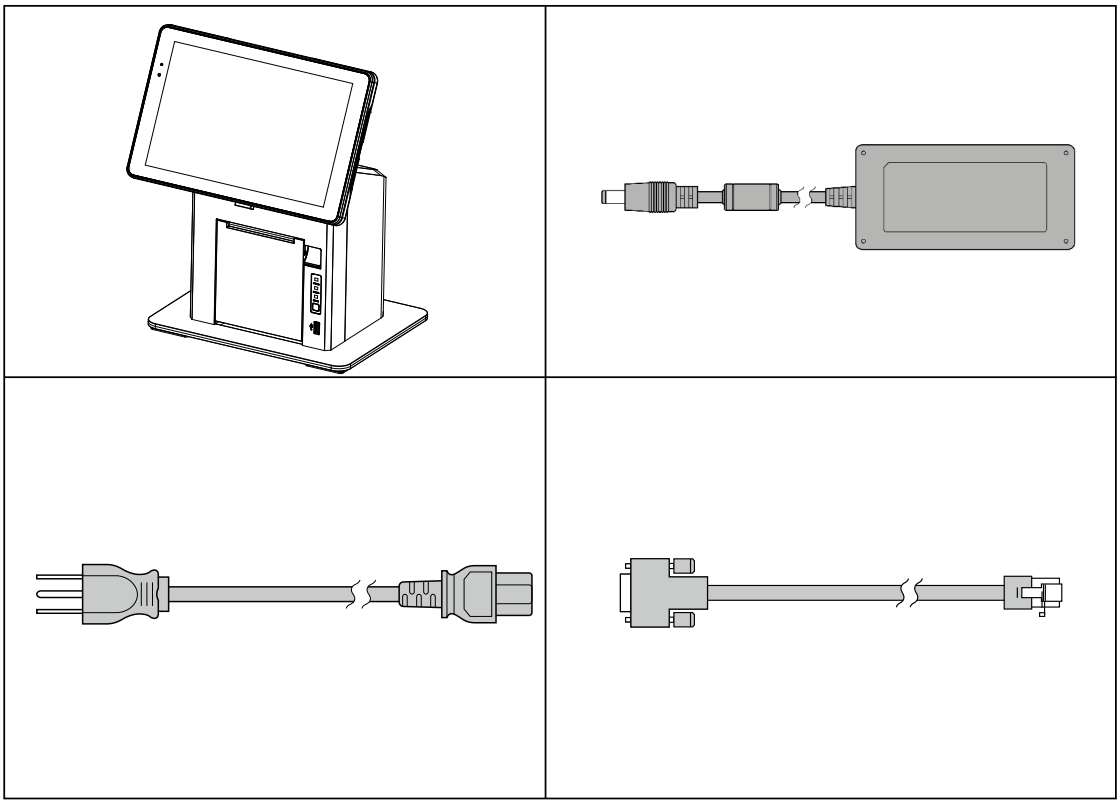

a. T635M System
b. Power adapter
c. Power cord
d. RJ45-DB9 cable (x2)

2. System View

2-1. Touch Panel

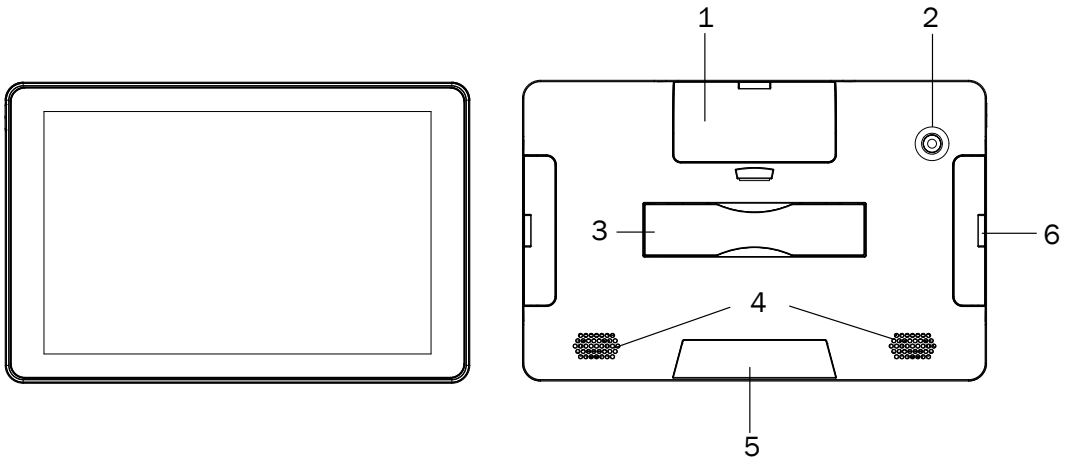

Item No.	Description
1	Expansion dummy cover
2	Camera hole
3	Hand strap
4	Speaker
5	Charging slot
6	Expansion dummy cover

2-2. Touch Pamel with Printer Stand

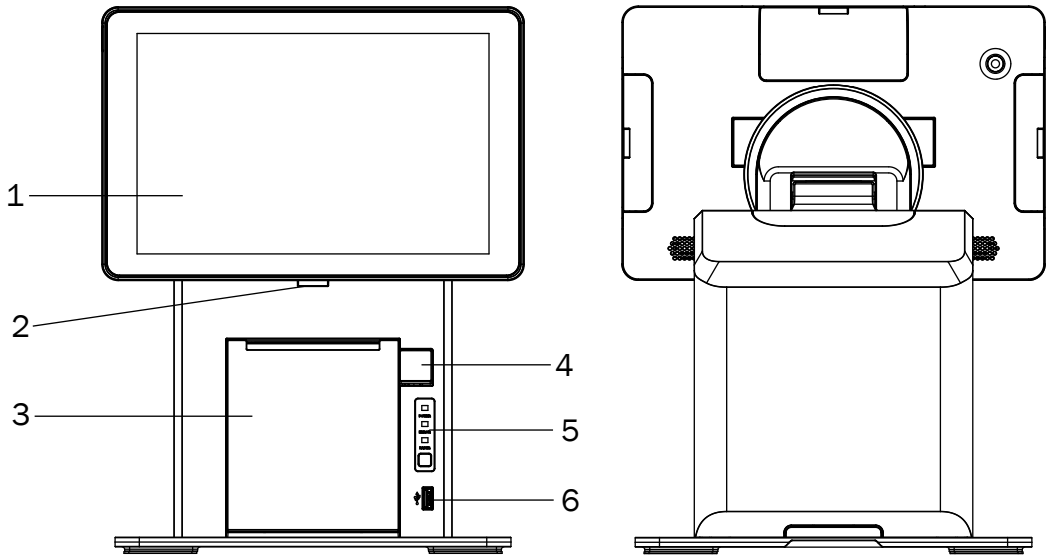

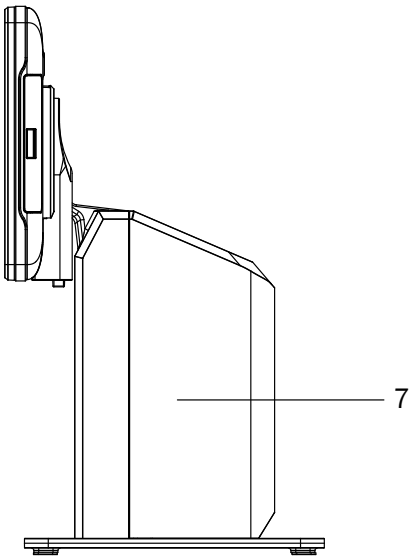

Item No.	Description
1	Touch panel
2	Lock button of printer stand
3	Thermal printer
4	Release button
5	Printer indicator (power, error, and paper) & Paper feed button
6	USB
7	System box (IO board and thermal printer inside)

2-3. Dimensions

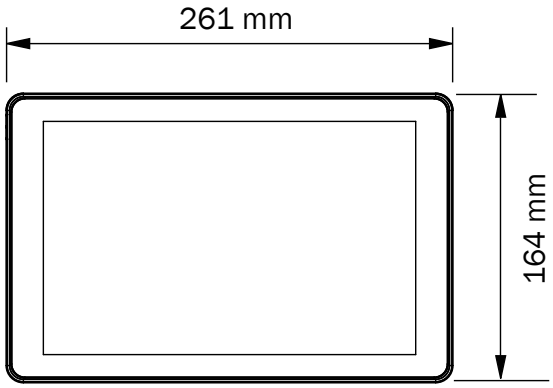

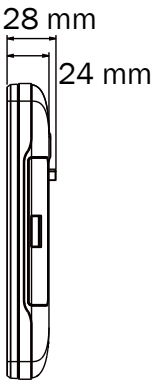

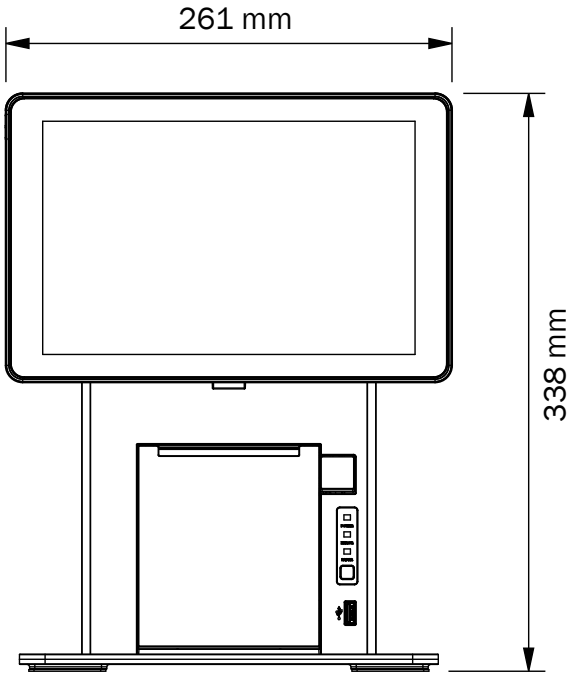

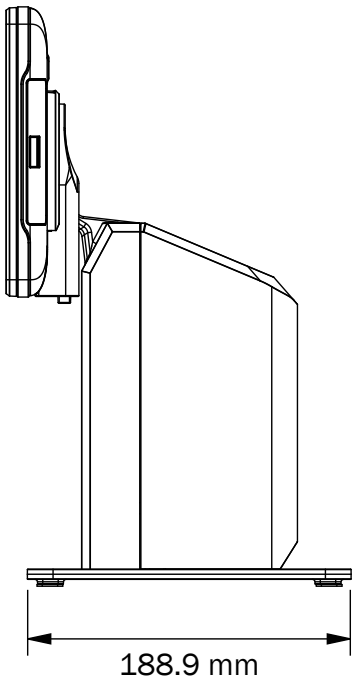

2-4. IO Port View

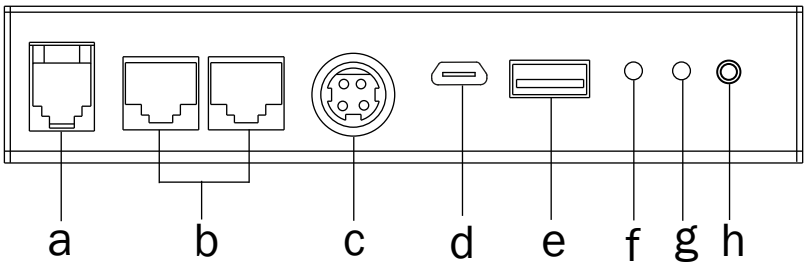

Item No.	Description
a	Cash drawer
b	COM2/COM1
c	DC 19V in
d	Micro USB
e	USB 2.0
f	LED(power)
g	LED(paring)
h	Paring button

3. System Assembly & Disassembly

3-1. Install Touch Panel to Printer Stand

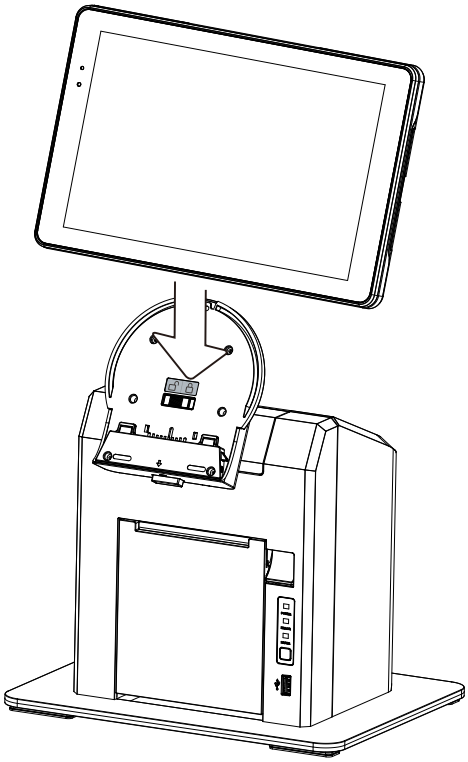

1. Directly put the touch panel into the cradle of printer stand.

3-2. Install the Power Adapter

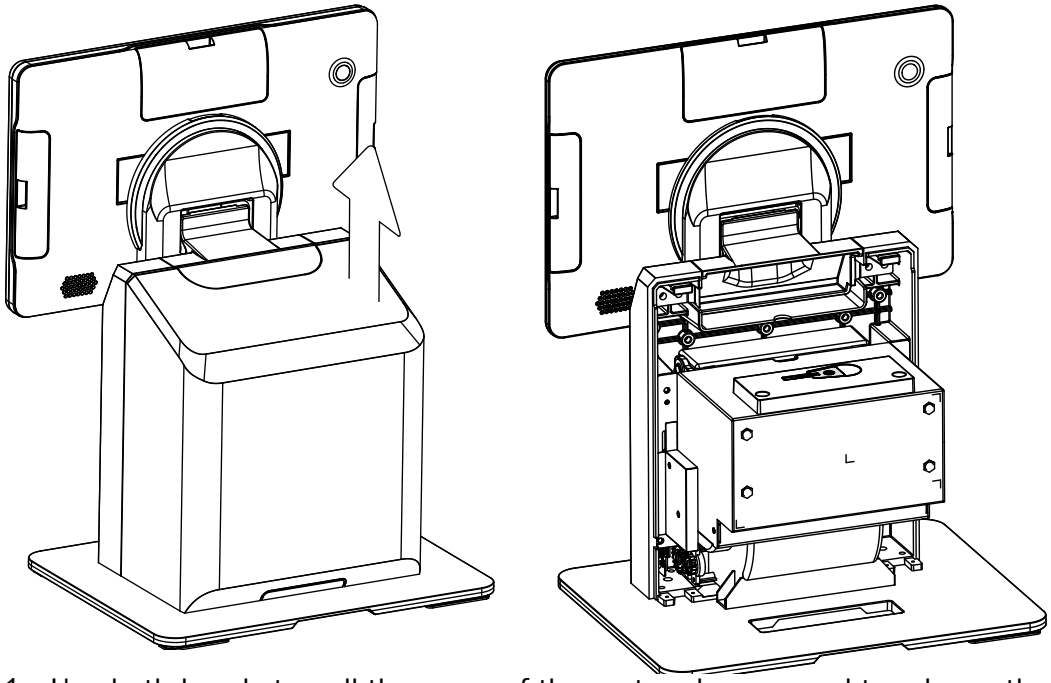

1. Use both hands to pull the cover of the system box upward to release the cover from the system box.

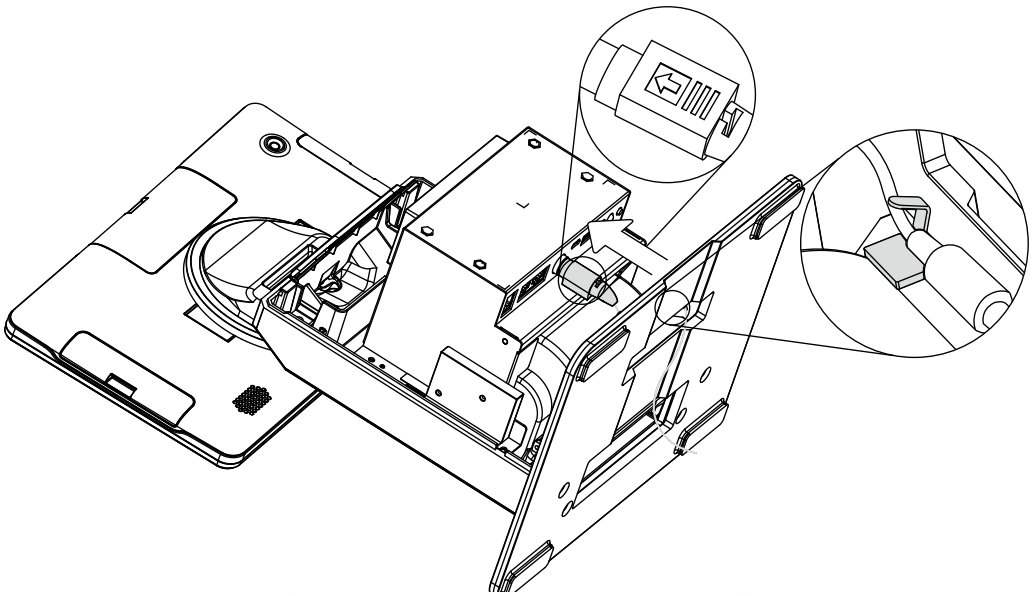

2. Place the system face down to access the bottom of the stand.
3. Thread the power adapter cable through the hole of the stand as shown in the picture.
4. Find the power connector on the right of the I/O panel (refer to chapter 2-4 c.) and connect the power adapter to the DC-IN connector.
5. Finally arrange and fix the cable by using the hook as shown in the picture.

Warning:

- Please follow the direction to plug the adapter and make sure it is fully connected into the I/O port.
- When attaching or detaching the cable, do so by holding the connector, not the cable itself.
- **DO NOT** pull or rotate the cable which may cause damage to the fitting.

3-3. Connect iPad Jacket to Printer Stand

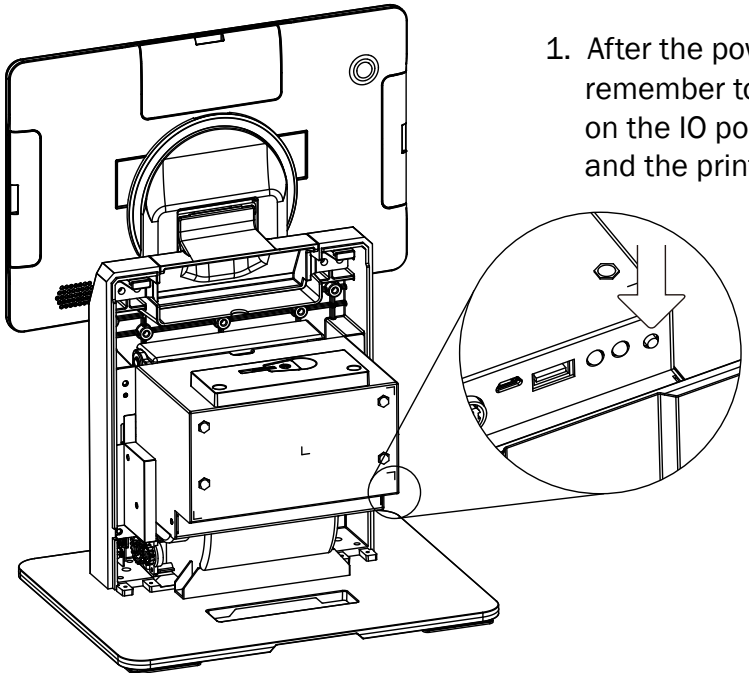

1. After the power adapter is installed, remember to push the paring button on the IO port so that the touch panel and the printer stand will be connected.

3-4. Remove Touch Panel from Printer Stand

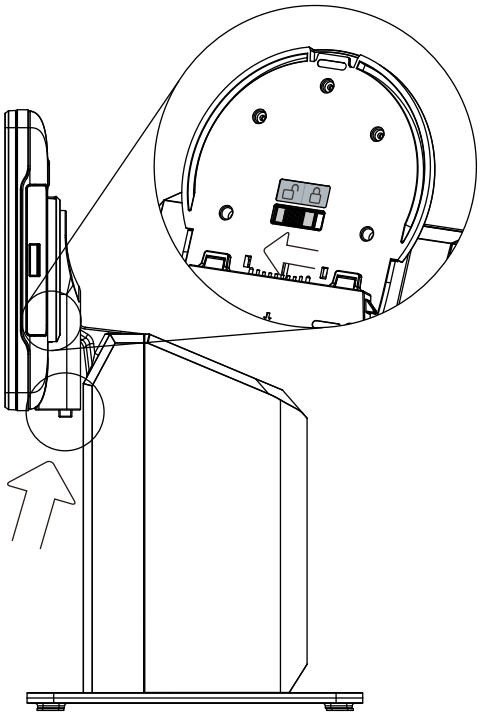

1. Push the release button on the printer stand and then pull the touch panel upward to release it from the printer stand.

* Please note you can remove the touch panel from the printer stand only on the condition that the switch panel on the printer stand shows "unlock". See the enlarged part in the picture.

When the switch panel on the printer stand shows “Lock“, you can not push the release button to remove the iPad Jacket. Use the provided key or APP to unlock printer stand. Please follow the below steps:

- **Manually unlock**

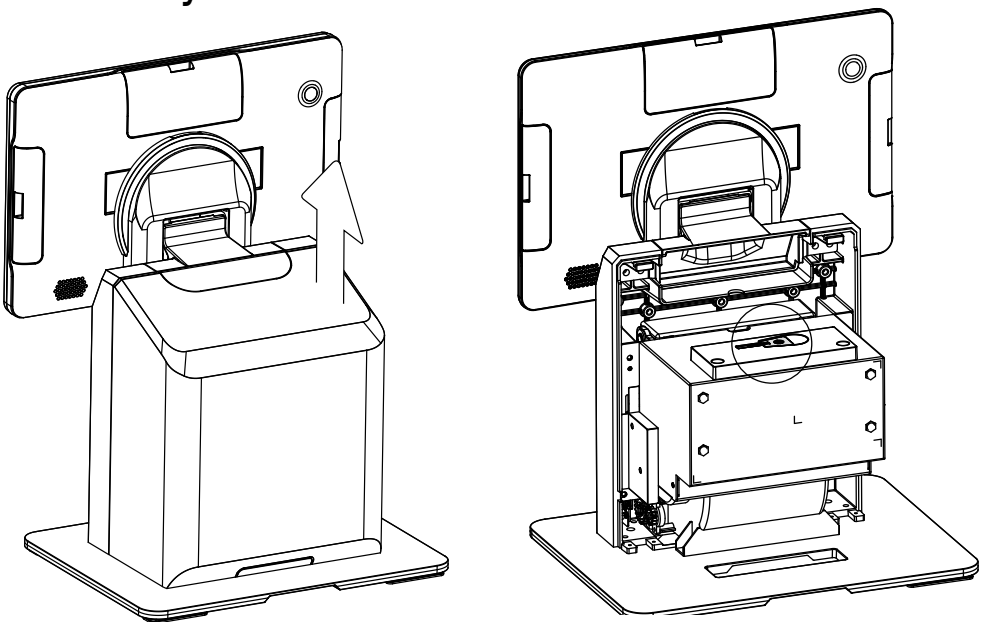

1. Open the cover of the system box.
2. You will find the key on the top of the printer.

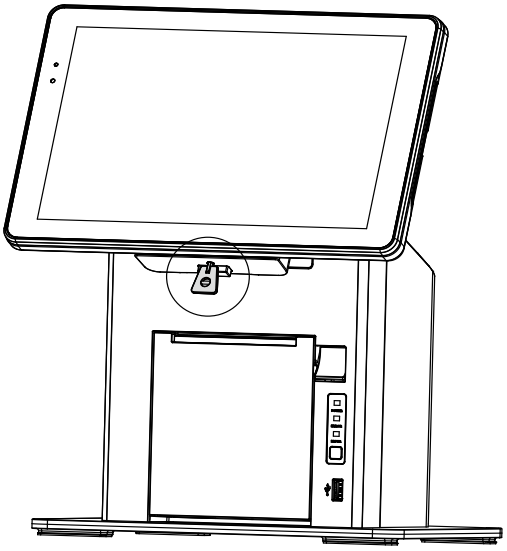

3. Insert the key and then pull the touch panel upward to release it from the printer stand.

- **APP unlock (demo APP)**

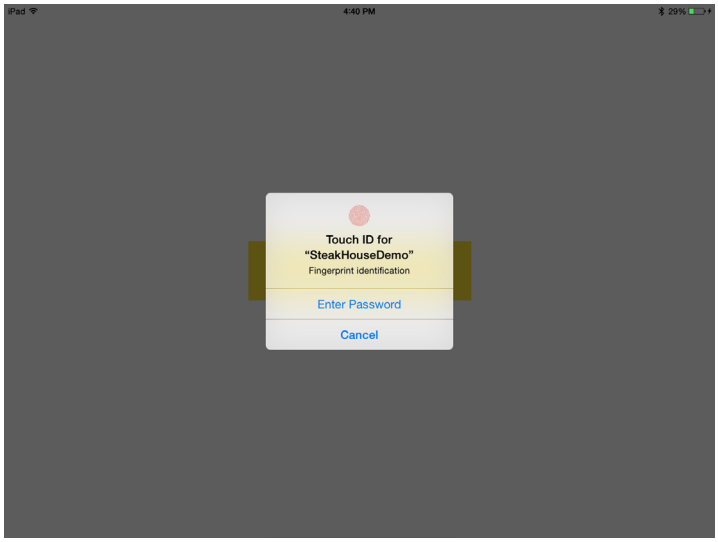

1. Use the Touch ID to login the APP program.

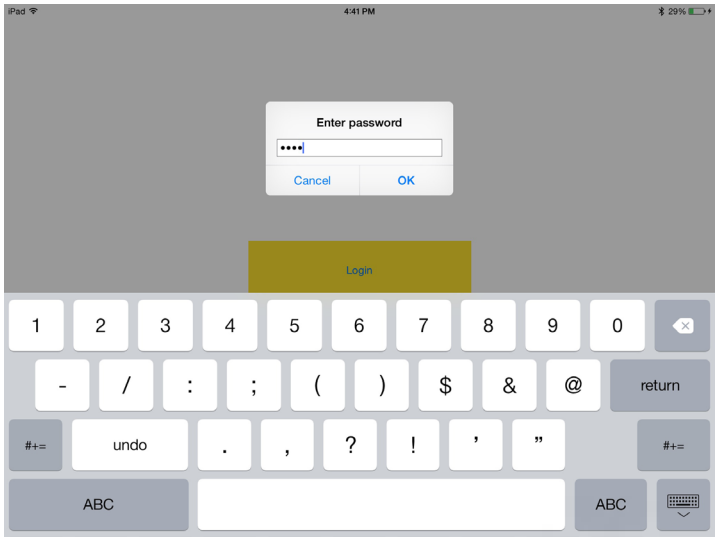

2. Enter password to login the APP program if the device is not equipped with the fingerprint sensor. Default password:1234.

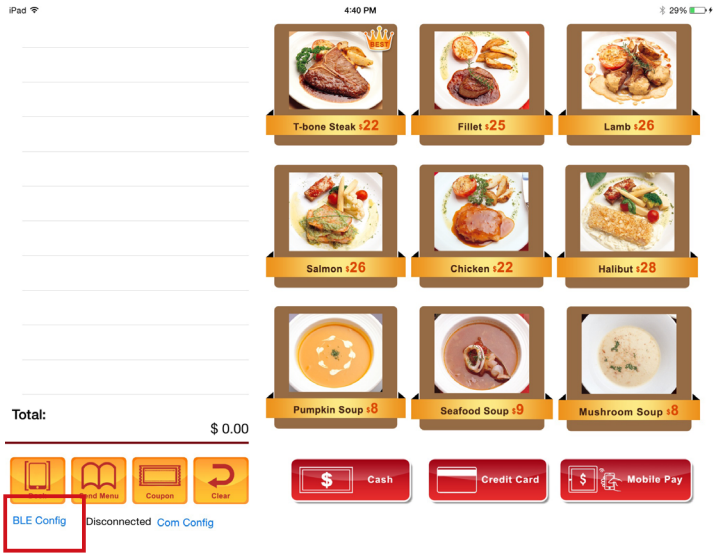

3. Click "BLE Config".

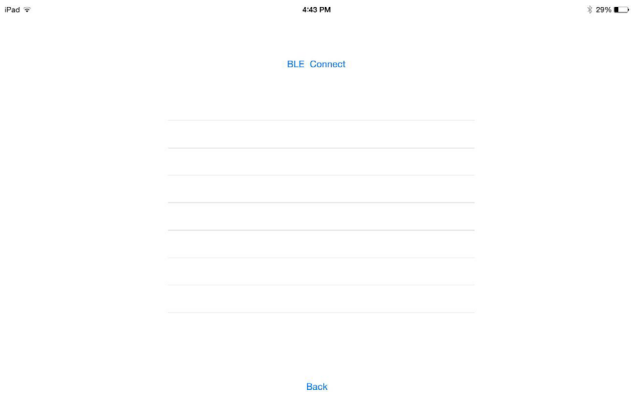

4. Click the device to connect.

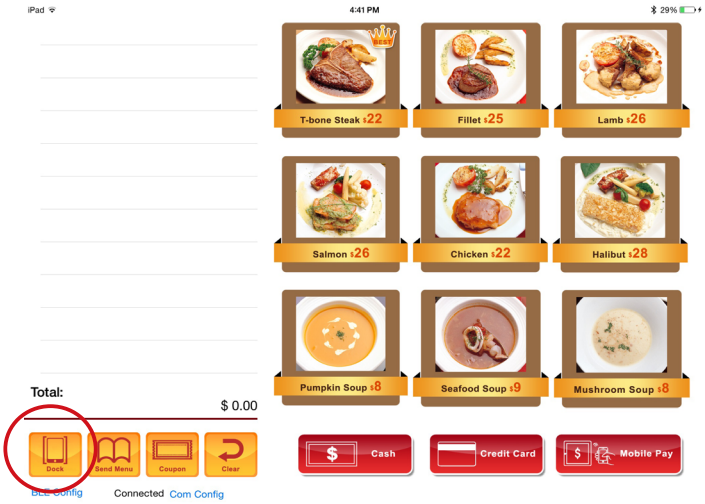

5. The BLE is now connected, then click "DOCK"

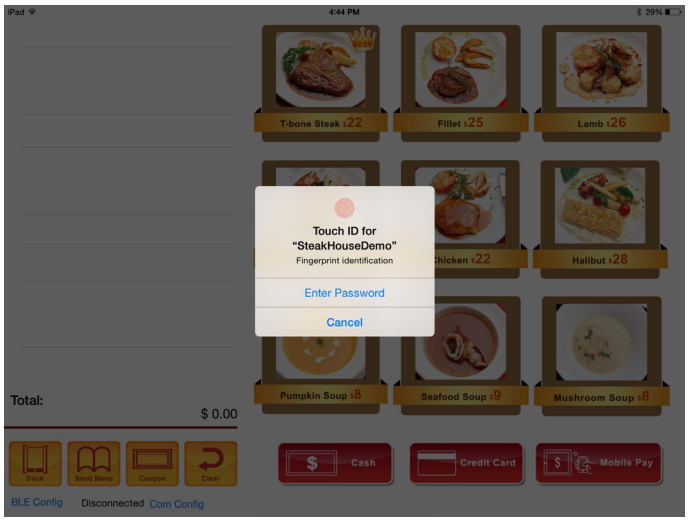

5. Use the Touch ID or enter the password to login again.

6. Now the device is unlock, push the lock button to release the iPad Jacket from the printer stand.

3-5. Load the Thermal Printer Paper

Note: Do not switch off the system. The printer must be powered on when replacing the printer paper.

1. Press the button at the right side to open the thermal printer module.

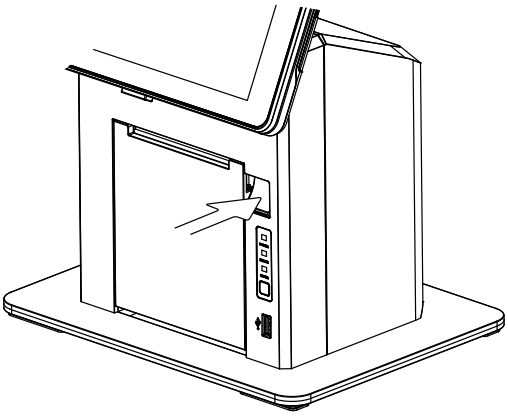

* Cut away the first five (5) cm of the paper, to obtain a straight edge and remove the label at the end of the roll.

2. Place the paper roll inside the printer slot, pull out a 2 or 3 cm length and then close the cover.

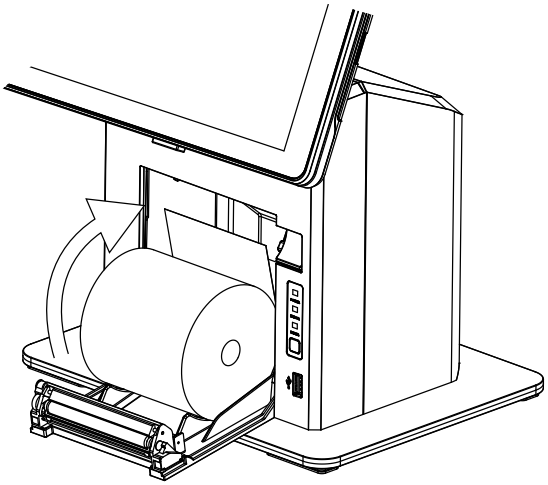

3. The paper will feed automatically through the printer (the system must be powered on).

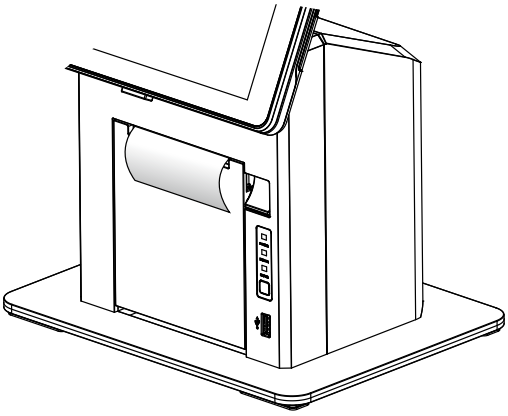

4. Specifications

Model	T635M
CPU support	Baytrail - T CR Z3735F
System memory	2G / 32G / Windows (TBD) 1G / 16G / Android (TBD)
LCD touch panel	
LCD size	10.1
Maximal resolution	1280 x 800
Touch screen type	P-CAP 5 points Multi-touch
Wireless communication	
Wireless LAN	802.11 a/b/g/n , 2.4G / 5GHz
Bluetooth	4.0+LE (Class 2, 10 meters)
Cellular Network	3G/LTE (Option)
NFC	NFC reader I2C MSN09 40x50 W/NXP NPC100 antenna module (SM-MSN09-C03) smart appr
Expansion I/O ports	
DC input	8 pad
Audio	
Built in speaker	1W x 2
Battery & Power	
Battery	4100 mAh, 3.7V, 15.1 Wh, Battery life 4hr
Power adapter	90W/19V
Control / Indicator	
Power button	1
Sensor	G-sensor
LED Indicator	1 (Battery status indicator)
Peripherals	
Rear Camera	5MP
Built- in hand strap	1
EMV certified module	MSR/ smart card reader combo module (Option)
Docking Station	
I/O board	USB I/O Board ,BT I/O Board , 4 COM I/O Board
Environment	
Sealing	IP54 (Display side)
EMC & Safety	FCC Class B / CE Mark / LVD / SAR
Operating temperature	0°C ~ 35°C (32°F ~ 95°F)(charging mode) 0°C ~ 40°C (32°F ~ 104°F)(none charging mode)
Storage temperature	-10°C ~ 45°C (14°F ~ 114°F)
Humidity	20% ~ 85% RH non condensing
ESD	Tablet: 8kV Contact discahrge, 15kV Air dischargeDocking station: 4kV Contact discahrge, 8kV Air discharge
Dimension (W x D x H)	261 x 169 x 24.0mm (10.3” x 6.7” x 0.94”)
Weight (N.W./G.W.)	
OS support	Window 8.1 with Bing / Windows 8.1 Industry Pro / Android 4.4.4

* This specification is subject to change without prior notice.

5. Jumper Settings

Cash Drawer Power Setting

Function	JP2
+12V	[1 2] 3 4
▲+24V	1 2 [3 4]

COM Power Setting

Function	JP3
▲+0V	1 3 2 4
+5V	[1 2] 3 4
+12V	1 2 [3 4]

▲ = Manufacturer Default Setting

[1 2] Jumper open [1 2] Jumper short

Appendix: API Information

Please contact your service provider for more detailed informaiton on software porting guide.