USER MANUAL

VERSION 1.0 September 2019

POS667
Hardware System

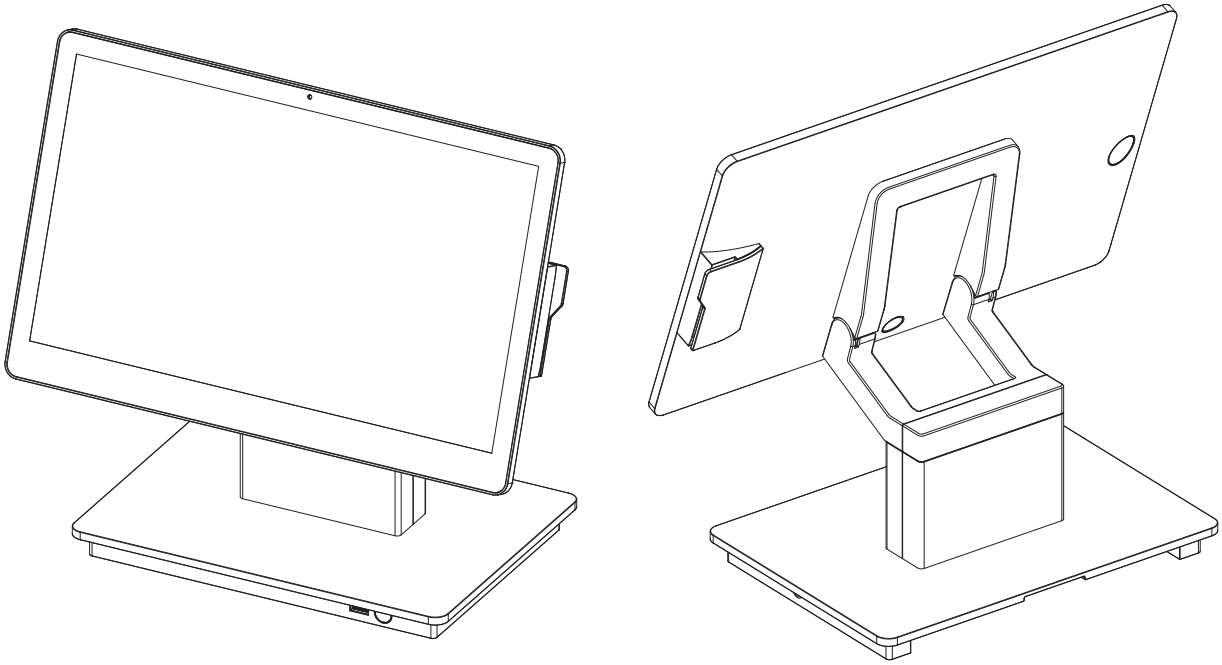

Copyright 2019
All Rights Reserved
Manual Version 1.0

The information contained in this document is subject to change without notice.
We make no warranty of any kind with regard to this material, including, but not limited to, the implied warranties of merchantability and fitness for a particular purpose. We shall not be liable for errors contained herein or for incidental or consequential damages in connection with the furnishing, performance, or use of this material.

This document contains proprietary information that is protected by copyright. All rights are reserved. No part of this document may be photocopied, reproduced or translated to another language without the prior written consent of the manufacturer.

TRADEMARK

Intel®, Pentium® and MMX are registered trademarks of Intel® Corporation.
Microsoft® and Windows® are registered trademarks of Microsoft Corporation.
Other trademarks mentioned herein are the property of their respective owners.

Safety

IMPORTANT SAFETY INSTRUCTIONS

1. To disconnect the machine from the electrical power supply, turn off the power switch and remove the power cord plug from the wall socket. The wall socket must be easily accessible and in close proximity to the machine.
2. Read these instructions carefully. Save these instructions for future reference.
3. Follow all warnings and instructions marked on the product.
4. Do not use this product near water.
5. Do not place this product on an unstable cart, stand, or table. The product may fall, causing serious damage to the product.
6. Slots and openings in the cabinet and the back or bottom are provided for ventilation to ensure reliable operation of the product and to protect it from overheating. These openings must not be blocked or covered. The openings should never be blocked by placing the product on a bed, sofa, rug, or other similar surface. This product should never be placed near or over a radiator or heat register or in a built-in installation unless proper ventilation is provided.
7. This product should be operated from the type of power indicated on the marking label. If you are not sure of the type of power available, consult your dealer or local power company.
8. Do not allow anything to rest on the power cord. Do not locate this product where persons will walk on the cord.
9. Never push objects of any kind into this product through cabinet slots as they may touch dangerous voltage points or short out parts that could result in a fire or electric shock. Never spill liquid of any kind on the product.

CE MARK

This device complies with the requirements of the EEC directive 2014/30/EU with regard to “Electromagnetic compatibility” and 2014/35/EU “Low Voltage Directive”.

FCC

This device complies with part 15 of the FCC rules. Operation is subject to the following two conditions:
(1) This device may not cause harmful interference.
(2) This device must accept any interference received, including interference that may cause undesired operation.

CAUTION ON LITHIUM BATTERIES

There is a danger of explosion if the battery is replaced incorrectly. Replace only with the same or equivalent type recommended by the manufacturer. Discard used batteries according to the manufacturer’s instructions.

Battery Caution

Risk of explosion if battery is replaced by an incorrectly type. Dispose of used battery according to the local disposal instructions.

Safety Caution

Note: To comply with IEC60950-1 Clause 2.5 (limited power sources, L.P.S) related legislation, peripherals shall be 4.7.3.2 “Materials for fire enclosure” compliant.

4.7.3.2 Materials for fire enclosures
For MOVABLE EQUIPMENT having a total mass not exceeding 18kg.the material of a FIRE ENCLOSURE, in the thinnest significant wall thickness used, shall be of V-1 CLASS MATERIAL or shall pass the test of Clause A.2.
For MOVABLE EQUIPMENT having a total mass exceeding 18kg and for all STATIONARY EQUIPMENT, the material of a FIRE ENCLOSURE, in the thinnest significant wall thickness used, shall be of 5VB CLASS MATERIAL or shall pass the test of Clause A.1

LEGISLATION AND WEEE SYMBOL

2012/19/EU Waste Electrical and Electronic Equipment Directive on the treatment, collection, recycling and disposal of electric and electronic devices and their components.

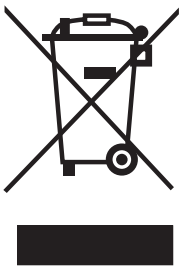

The crossed dust bin symbol on the device means that it should not be disposed of with other household wastes at the end of its working life. Instead, the device should be taken to the waste collection centers for activation of the treatment, collection, recycling and disposal procedure.
To prevent possible harm to the environment or human health from uncontrolled waste disposal, please separate this from other types of wastes and recycle it responsibly to promote the sustainable reuse of material resources.

Household users should contact either the retailer where they purchased this product, or their local government office, for details of where and how they can take this item for environmentally safe recycling.

Business users should contact their supplier and check the terms and conditions of the purchase contract.

This product should not be mixed with other commercial wastes for disposal.

Revision History

Changes to the original user manual are listed below:

Revision	Description	Date
1.0	• Initial release	September 2019

Table of Contents

1. Packing List 1

1-1. Standard Accessories 1
1-2. Optional Accessories 2

2. System View 3

2-1. Front & Side View 3
2-2. Rear View 3
2-3. IO Ports View 4
2-4. System Dimensions 4

3. System Assembly & Disassembly 5

3-1. Install the Power Adapter 5
3-2. Remove the System Box 5

4. Peripherals Installation 7

4-1. Install the MSR Module 7
4-2. Install the iButton Module 8
4-3. Install the NFC Module 9
4-4. Install the Customer Display 10
4-5. Install the Second Display 11
4-6. Cash Drawer Installation 13

5. Specification 15

6. Configuration 17

6-1. D84U Motherboard Layout 17
6-2. Connectors & Functions 18
6-3. Jumper Setting 19

The page is intentionally left blank.

1. Packing List

1-1. Standard Accessories

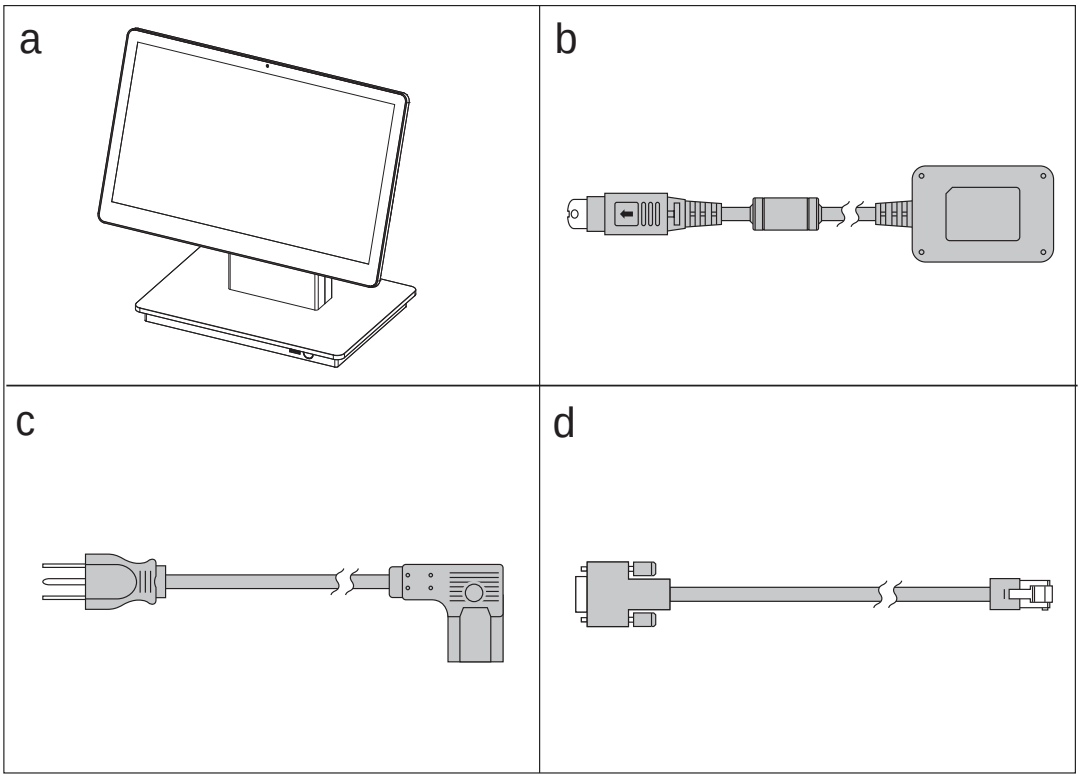

a. System
b. Power adapter (90W)
c. Power cord
d. RJ45-DB9 cable (x2)

Note: Power cord will be supplied differently according to various region or country.

1-2. Optional Accessories

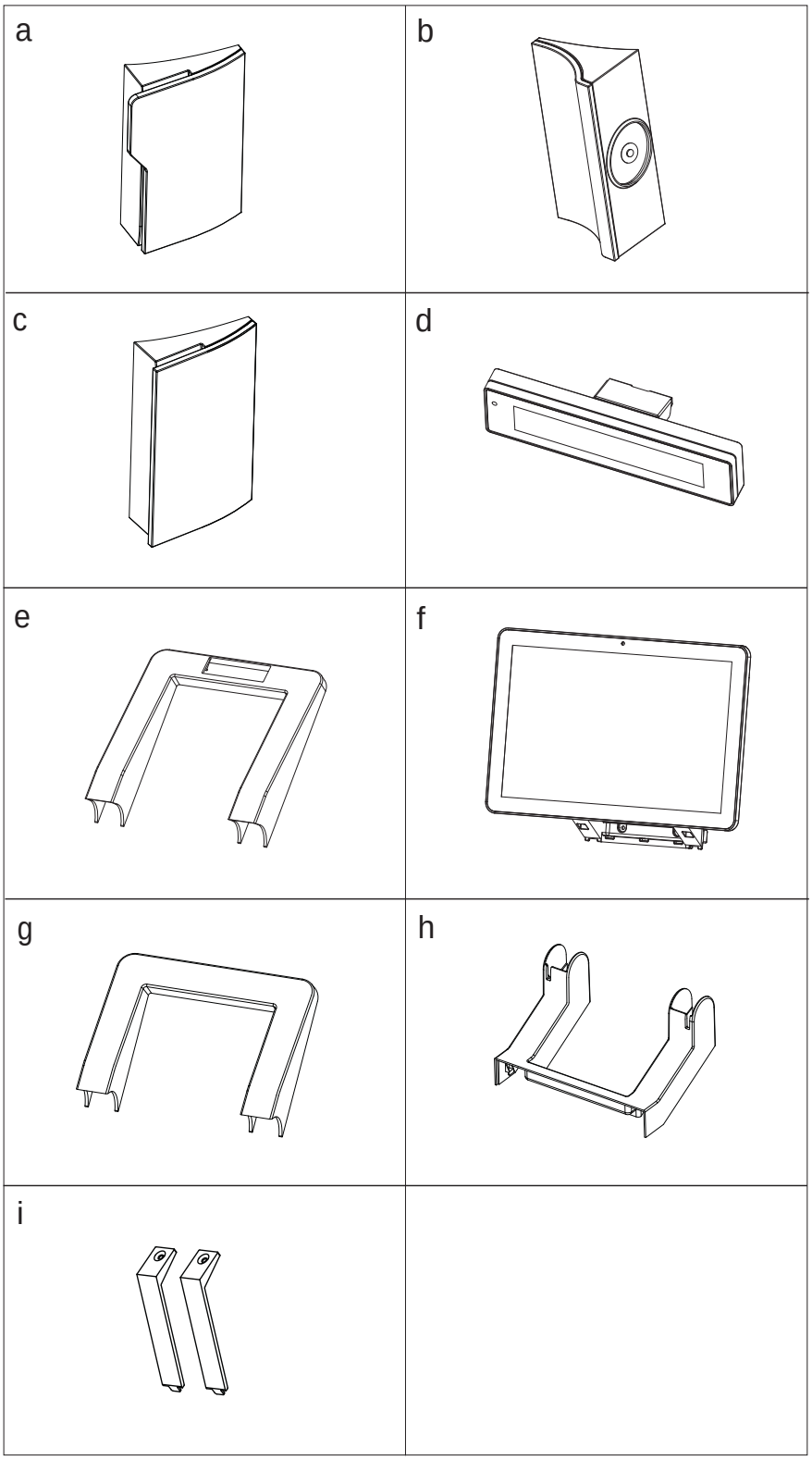

a. MSR module
b. iButton module
c. NFC module
d. Customer display
e. Hinge cover for customer display
f. 10.1" 2nd display
g. Hinge cover for 2nd display
h. Arm cover for 2nd display (Top)
i. Arm cover for 2nd display (Bottom) x 2

2. System View

2-1. Front & Side View

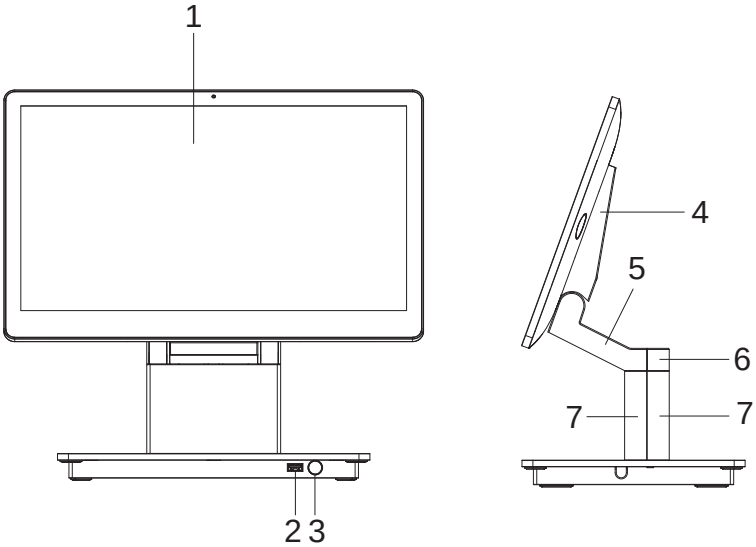

No.	Description
1	Touch screen
2	USB2.0
3	Power button
4	Hinge cover
5	Stand arm
6	Stand arm cover
7	Stand front cover

2-2. Rear View

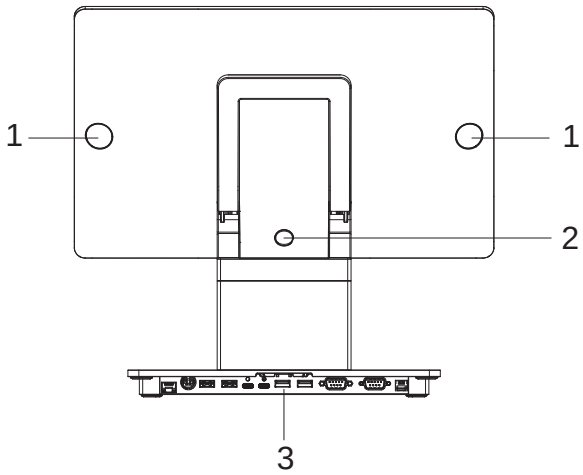

No.	Description
1	Dummy door of MSR/iButton module
2	Power/OSD button
3	System box

2-3. IO Ports View

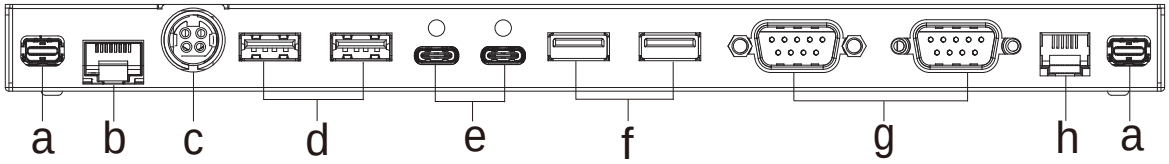

No.	Description
a	FeDP
b	LAN
c	DC 19V in
d	USB 2.0 x 2
e	USB Type C x 2
f	USB 3.0 x 2
g	COM x 2
h	Cash drawer

2-4. System Dimensions

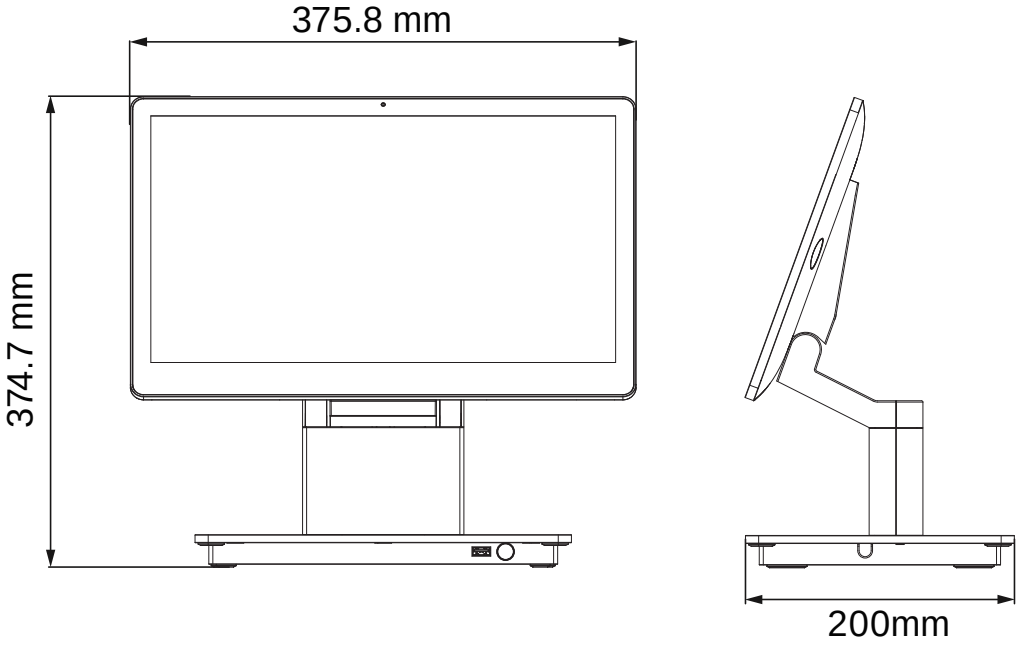

3. System Assembly & Disassembly

3-1. Install the Power Adapter

The system is equipped with a 90W power adapter. Please plug it into the system as shown below.

1. Find the DC-in connector located on the bottom of the system.(refer to Chapter 2-3 c).
2. Plug the cable directly into the connector then plug the adapter directly into the AC outlet.

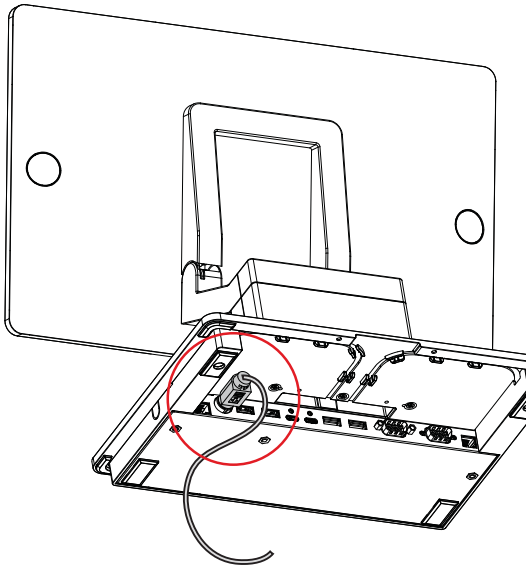

3-2. Remove the System Box

1. Lay down the system to access the bottom of the stand.
2. Remove the screws (x2) and pull the holder of the system box outwards.

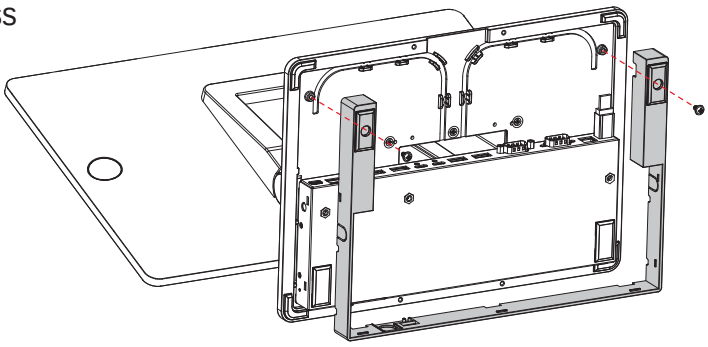

3. Disconnect the cable of the LCD panel.

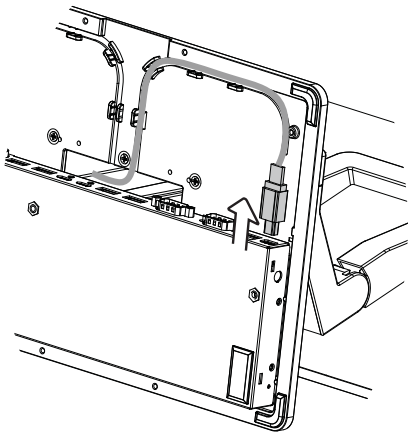

4. The system box is placed onto four hooks. Lift the system box and then pull it outwards to release it from the bottom of the stand.

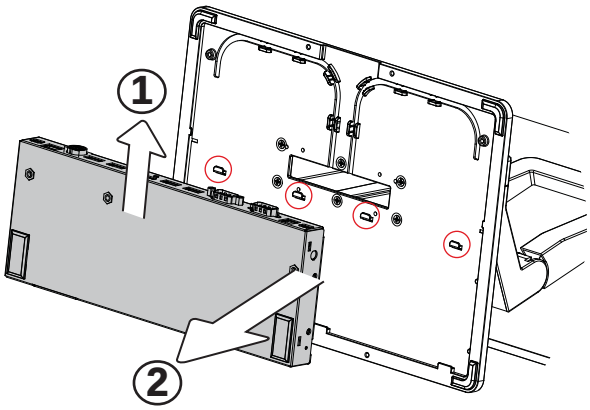

4. Peripherals Installation

4-1. Install the MSR Module

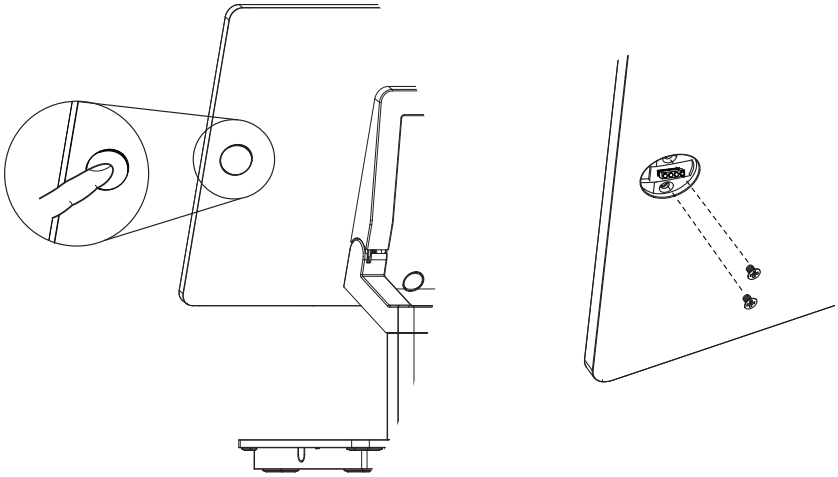

1. Press to remove the dummy cover and then loosen the screws (x2).

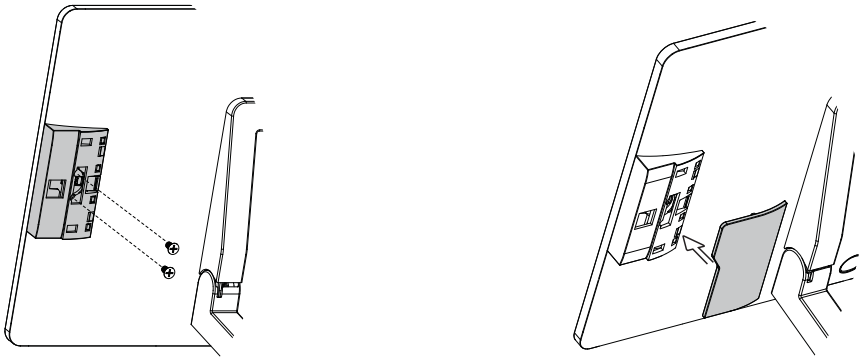

2. Position the MSR module and fasten the screws (x2) on the back to secure the module.
3. Attach the top cover of the MSR module and make sure it locks in place.

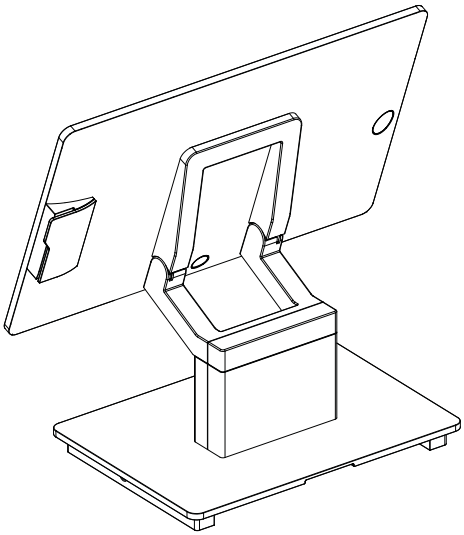

4-2. Install the iButton Module

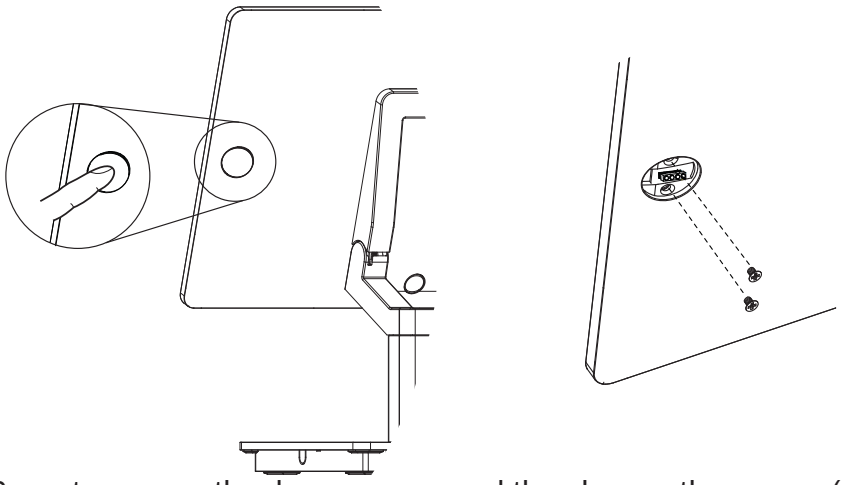

1. Press to remove the dummy cover and then loosen the screws (x2).

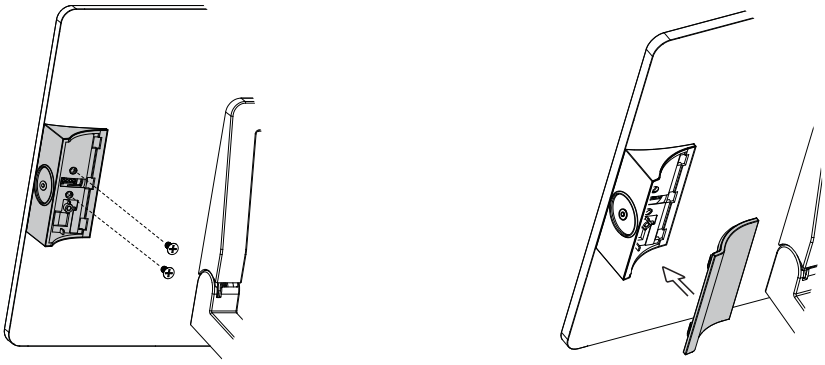

2. Position the iButton module and fasten the screws (x2) on the back to secure the module.
3. Attach the top cover of the iButton module and make sure it locks in place.

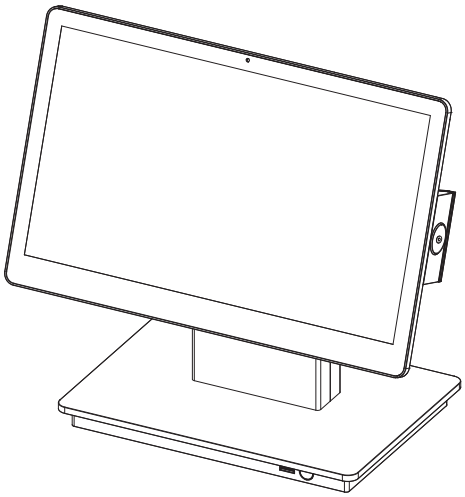

4-3. Install the NFC Module

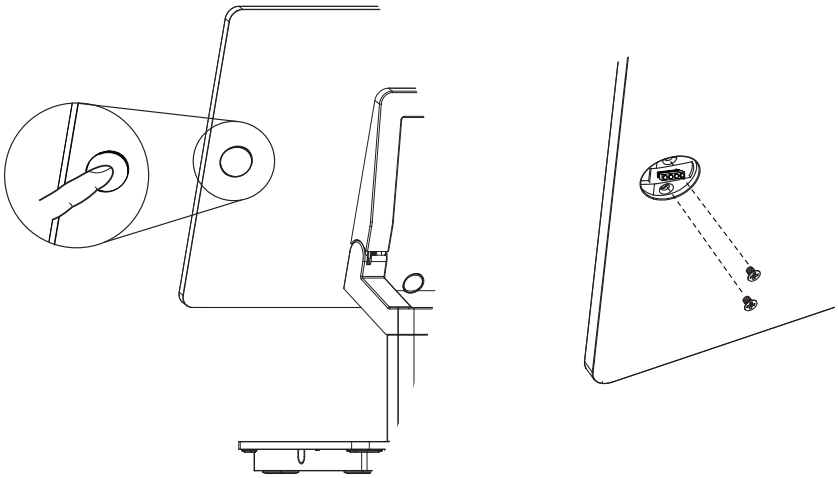

1. Press to remove the dummy cover and then loosen the screws (x2).

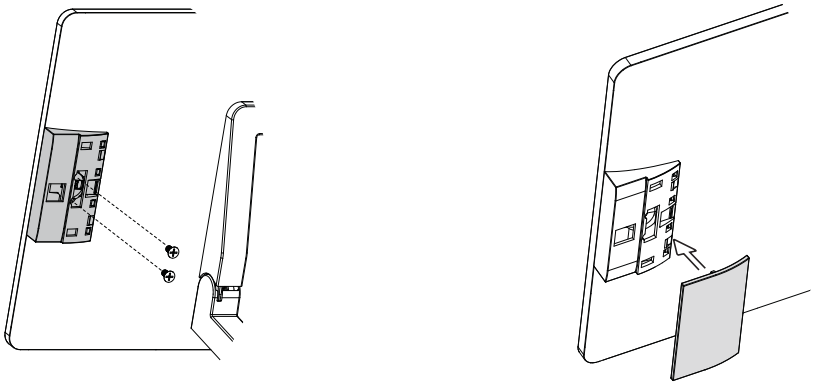

2. Position the NFC module and fasten the screws (x2) on the back to secure the module.
3. Attach the top cover of the NFC module and make sure it locks in place.

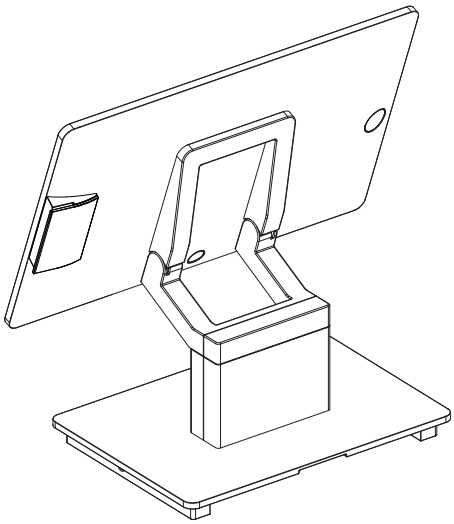

4-4. Install the Customer Display

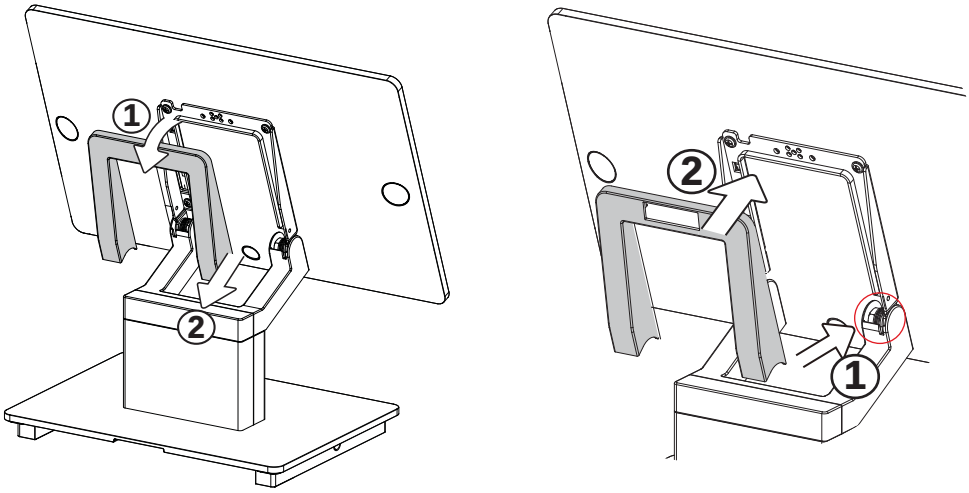

1. To install the customer display, replace the hinge cover with the one which has a opening in the top.

Removing the hinge cover: The cover attaches magnetically to the hinge. Pull the top side of the cover ourdwards first and then release the rest part of the cover to seperate it from the hinge.
Installing the hinge cover: To install the hinge cover, angle the hinge cover so that the bottom side is inserted first into the torque hinge. Then press the top side of the cover into place.

2. Connect the customer display cable (x1) to the connector on system side.

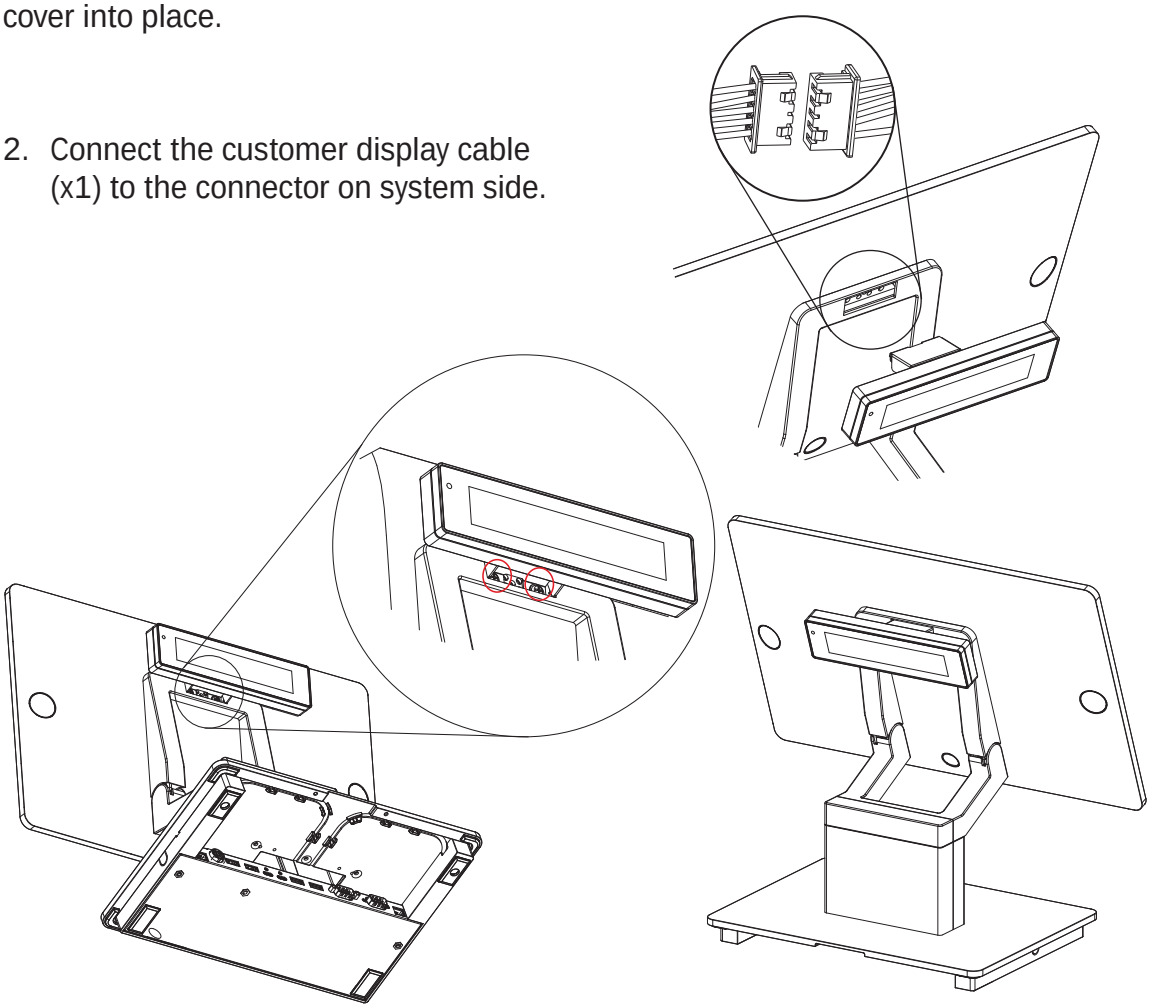

3. Attach the customer display and fasten it into place with the screws (x2) provided.

4-5. Install the Second Display

Accessories items

a. 10.1" 2nd display module
b. Top arm cover
c. Bottom arm cover
d. Hinge cover
e. Screws for 2nd display arm x 5
f. Screws for top arm cover x 4
g. Screws for bottom arm cover x 2

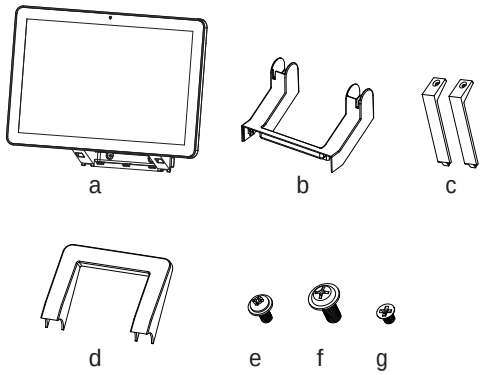

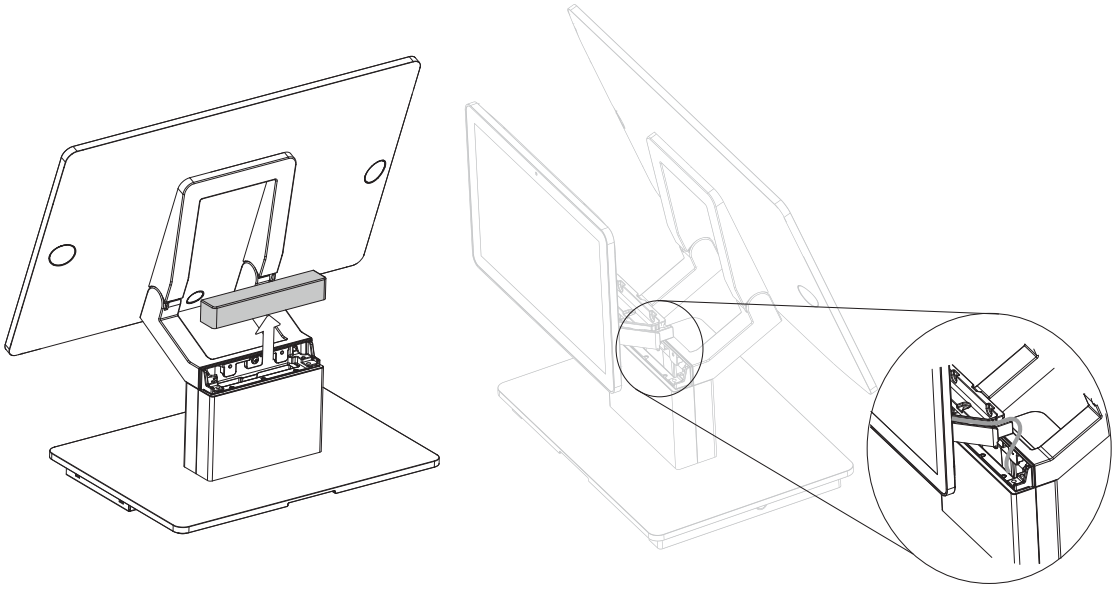

1. Remove the stand cover by pulling it upwards.
2. Attach the 10.1" 2nd display module to the system and route the 2nd display cable through the hole of the stand as picture shown.

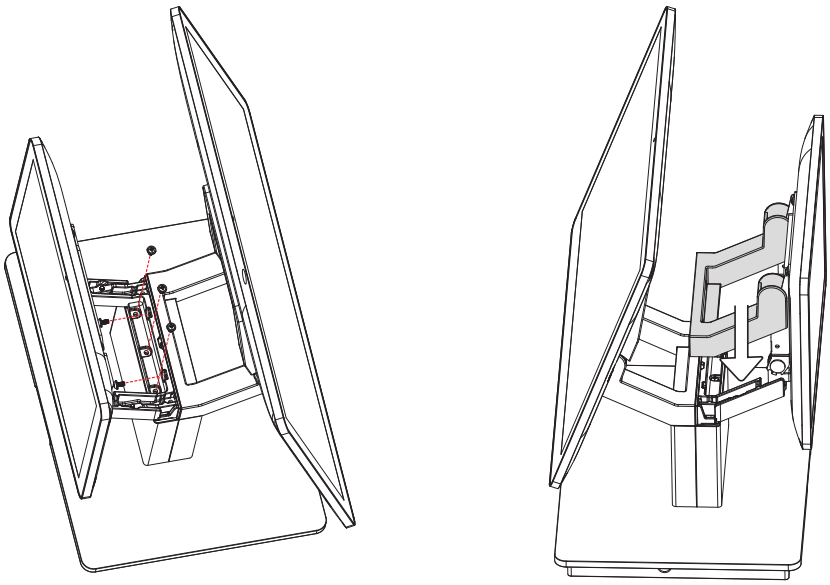

3. Fasten the 2nd display module in place with the screws (x5) provided.
4. Slide the top arm cover.

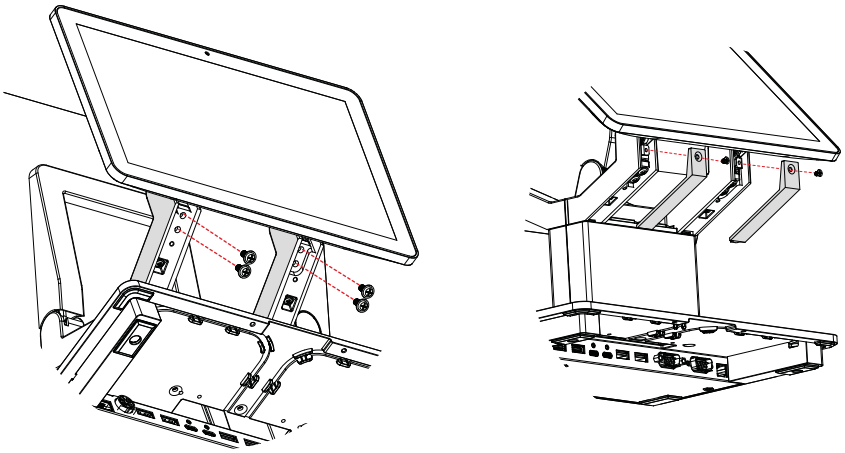

5. Secure the top arm cover by fastening the screws (x4) from underneath.
6. Attach the bottom arm covers (x2) and fasten the screws (x2).

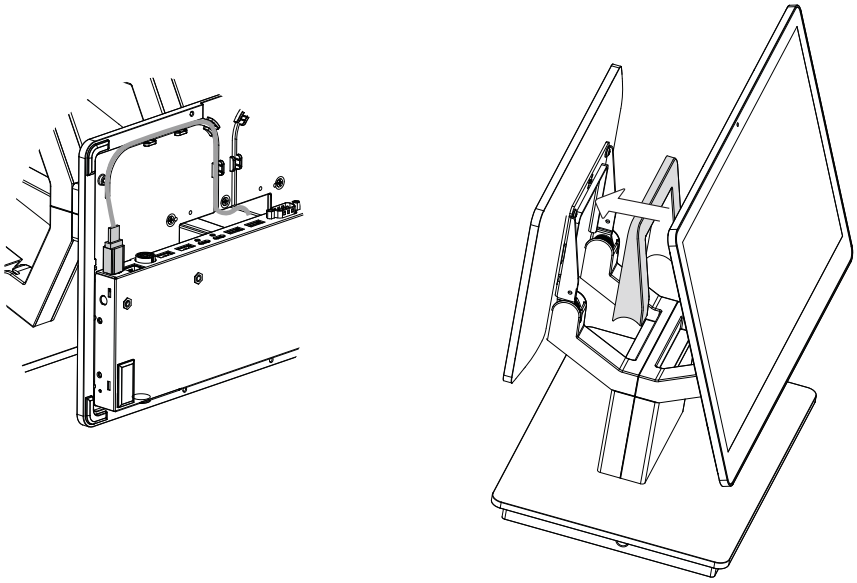

7. Follow steps 1 and 2 described in Chapter 3-2 to release the holder of the system box. Thread the 2nd display cable through the opening and connect the host end of the cable to FeDP port. (refer to Chapter 2-3 a).
8. Finally attach the hinge cover.

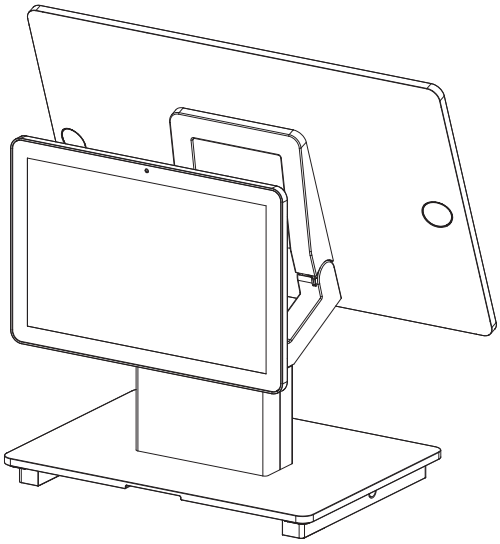

4-6. Cash Drawer Installation

You can install a cash drawer through the cash drawer port. Please verify the pin assignment before installation.

Cash Drawer Pin Assignment

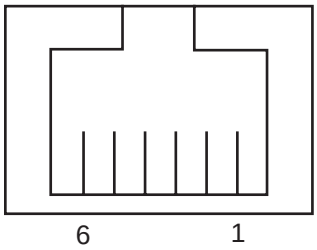

Pin	Signal
1	Cash drawer 2 In
2	Cash drawer 1 Out
3	Cash drawer 1 In
4	12V / 19V
5	Cash drawer 2 Out
6	GND

Cash Drawer Controller Register

The Cash Drawer Controller use one I/O addresses to control the Cash Drawer.

Register Location: 0x482h
Attribute: Read / Write
Size: 8bit

BIT	BIT7	BIT6	BIT5	BIT4	BIT3	BIT2	BIT1	BIT0
Attribute	Reserved			CD1 Out	CD1 In	Reserved		

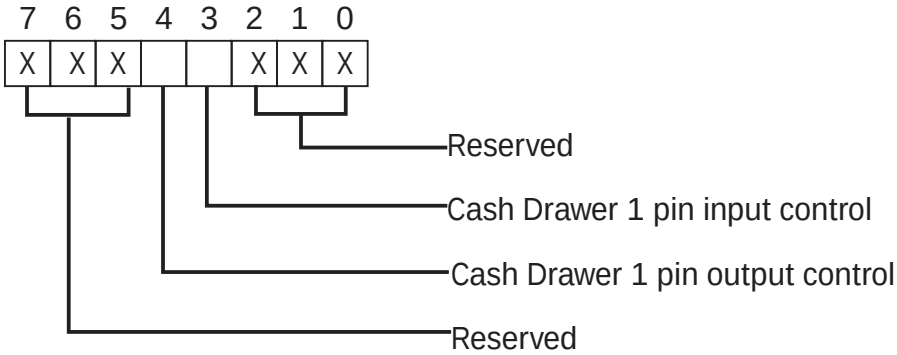

Bit 7: Reserved
Bit 6: Reserved
Bit 5: Reserved
Bit 4: Cash Drawer 1 pin output control.
= 1: Opening the Cash Drawer
= 0: Allow close the Cash Drawer
Bit 3: Cash Drawer 1 pin input control.
= 1: the Cash Drawer closed or no Cash Drawer
= 0: the Cash Drawer opened
Bit 2: Reserved
Bit 1: Reserved
Bit 0: Reserved

Note: Please follow the Cash Drawer control signal design to control the Cash Drawer.

Cash Drawer Control Command Example

Use Debug.EXE program under DOS or Windows98

Command	Cash Drawer
O 482 10	Opening
O 482 00	Allow to close
► Set the I/O address 482h bit4 =1 for opening Cash Drawer by “DOUT bit0” pin control. ► Set the I/O address 482h bit4 = 0 for allow close Cash Drawer.	

Command	Cash Drawer
I 482	Check status
► The I/O address 482h bit3 =1 mean the Cash Drawer is opened or not exist. ► The I/O address 482h bit3 =0 mean the Cash Drawer is closed.	

5. Specification

Model Name	POS667
Mainboard	**D84U**
CPU support	Intel KabyLake-U CPU i3 7100U 2.4GHz
System memory	1x DDR4 2133MHz SO-DIMM up to 16GB
Graphic memory	Intel HD Graphic DX12, define on CPU
LCD Touch Panel	
LCD size	15.6” LED
Brightness (cd/m²)	3000 nits
Maximal resolution	1920 x 1080
Touch screen type	True-Flat PCAP Touch
Storage	
FlashMemory	2x M.2 (M-key) NVMe or M.2 SATA SSD module
I/O Ports	
FeDP	2x Flytech-defined mini-DP (2-lane eDP/USB2.0/audio/power button/power)
USB Type A	Rear: 2x USB3.0 / 2x USB2.0 Front: 1x USB2.0
USB Type C	1x data only, 1x full-functional (USB2.0/USB3.0/DP/PD profile-2)
Serial / COM	2x DB9 (powered RS232) (default 0V; COM1,COM2 0V/5V/12V)
LAN (10/100/1000)	1 x RJ45
Cash drawer	1 x RJ11 (12V /19V)
DC jack	1x 4 pin w/ lock
Power switch	1
Power	
Power adapter	90W /19V
Peripherals (optional)	
MSR	1 (USB)
Fingerprint	1 (USB)
iButton	1 (USB)
NFC Reader	1 (USB) 13.56MHz
2D Scanner	1 (USB)
Second display	10.1” LED Second display (FeDP)
Customer display	Flush mount LCM display 2 x 20 characters (USB)
Speaker	1 x 2W
Camera	1 (USB)

Model Name	**POS667**
Mainboard	**D84U**
Control / Indicator	
Power button	1
Power LED	1(turn on: blue / turn off: Amber)
Certificate	
EMC & Safety	FCC, Class A, CE, LVD
ESD	4 kV Contact discharge, 8 kV Air discharge
Environment	
Sealing	IP54 (front side)
Operating temperature	0°C ~ 35°C (32°F ~ 95°F)
Storage temperature	-20°C ~ 60°C (-4°F ~ 140°F)
Humidity	20% ~ 85% RH non-condensing
Dimension (W x D x H)	375.8 x 200.0 x 374.7 mm (14.8" x 7.9" x 14.8") *With stand and plate
Weight	5kg (with LCM module)
OS supported	Windows 10 IoT Enterprise

*** This specification is subject to change without prior notice.**

6. Configuration

6-1. D84U Motherboard Layout

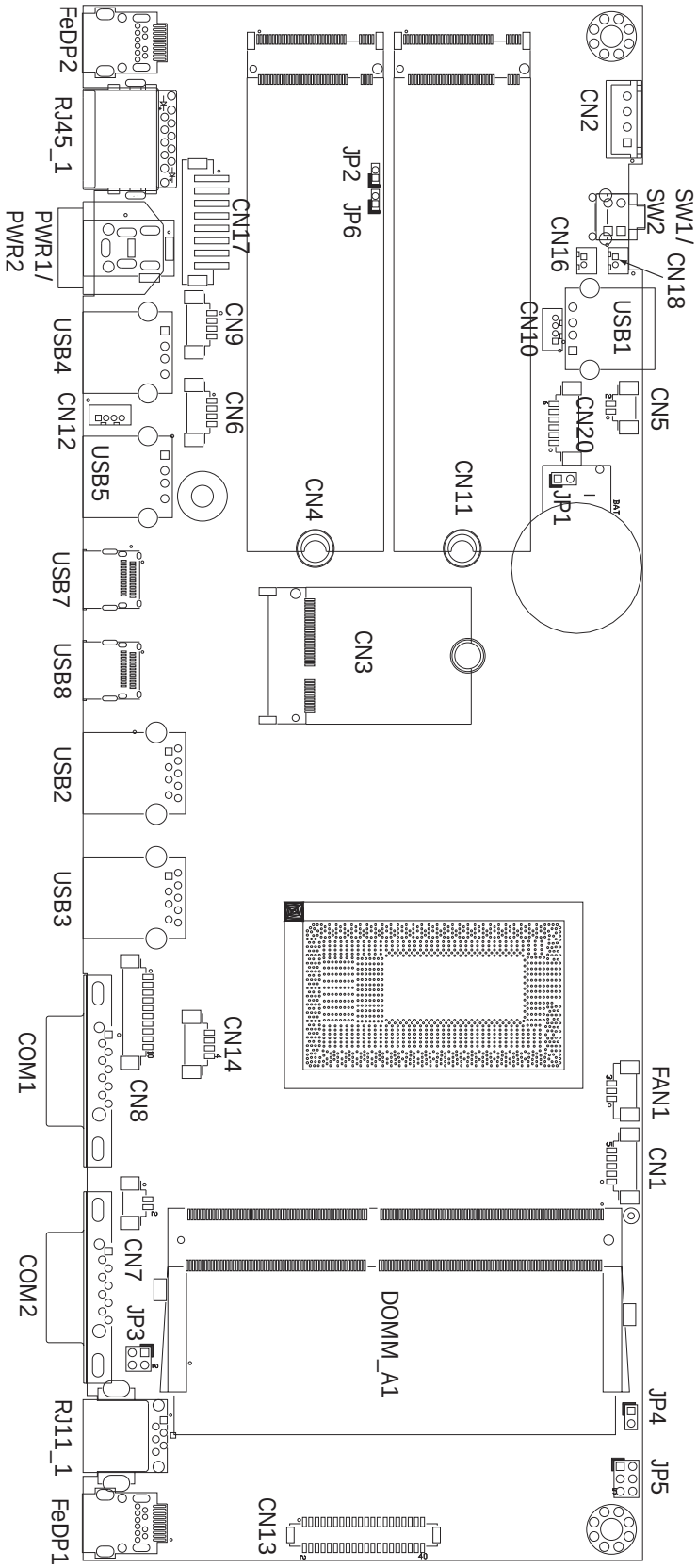

6-2. Connectors & Functions

Connector	Function
CN1	EC Debug
CN2	SATA power connector
CN3	M.2 E-KEY WIFI connector
CN4/11	M.2 M-KEY PCIE/SATA connector
CN5	Speaker R output
CN6	S0/S5 LED & power button connector
CN7	Storage LED connecotr
CN9/CN10/CN12/CN14	Internal USB connector
CN16	RTC battery Connector
CN17	Wide range & power connector
CN18	Speaker L output
CN20	Line-out/Mic-in connector
PWR1/PWR2	DC jack (2pin/4pin)
RJ11_1	Cash drawer connector
RJ45_1	LAN connector
SW1/SW2	Power button
DIMM_A1	DDR4 SO-DIMM
FAN1	CPU FAN connector
FeDP1	FeDP main display connector
FeDP2	FeDP 2nd display connector
USB1/USB4/USB5	USB2.0 connector
USB2/USB3	USB3.0 connector
USB7	USB-C full function connector
USB8	USB-C data only connector
COM1/COM2	COM port connector
COM3	Internal COM port connector
MINI_PCIE1	MINI PCIE
JP1	Audio Line-out setting
JP3	Cash drawer power setting
JP4	CPU power setting
JP5JP5(1-2)(3-4)	Speaker cable setting
JP5(5-6)	Speaker watt setting

6-3. Jumper Setting

Audio Line-out Setting

Function	JP1
▲Stereo	1 2
Reserved (line-out)	1 2

Cash Drawer Power Setting

Function	JP3
▲ +19V	1 3 2 4
+12V	1 3 2 4

Speaker watt setting

Function	JP5
▲ 2W	1 3 5 2 4 6
3W	1 3 5 2 4 6

Speaker cable setting

Function	JP5
▲ L=0.58m	1 3 2 4
L=2.0m	1 3 2 4
M/B	1 3 2 4

LCD ID Setting

Panel#	Resolution	LVDS		Output Interface	JP4
		Bits	Channel		
1	800 x 600	18	Single	LVDS Panel	1 [3 5 7] 9 2 [4 6 8] 10
2	800 x 600	24	Single	LVDS Panel	[1 3 5 7] 9 [2 4 6 8] 10
3	1024 x 768	18	Single	LVDS Panel	1 3 [5 7] 9 2 4 [6 8] 10
4	1024 x 768	24	Single	LVDS Panel	[1 3] 5 [7] 9 [2 4] 6 [8] 10
5	1366 x 768	18	Single	LVDS Panel	1 [3] 5 [7] 9 2 [4] 6 [8] 10
6	1366 x 768	24	Single	LVDS Panel	[1 7] 3 5 9 [2 8] 4 6 10
7	1024 x 600	18	Single	LVDS Panel	1 3 5 [7] 9 2 4 6 [8] 10
8	1280 x 1024	24	Dual	LVDS Panel	[1 3 5] 7 9 [2 4 6] 8 10
9	1440 x 900	24	Dual	LVDS Panel	1 [3 5] 7 9 2 [4 6] 8 10
13	1366 x 768	24	Single	LVDS Panel	1 [3] 5 7 9 2 [4] 6 8 10
14	1920 x 1080	24	Dual	LVDS Panel	[1] 3 5 7 9 [2] 4 6 8 10
15	1920 x 1080	24	Dual	LVDS Panel	1 3 5 7 9 2 4 6 8 10

1 2 Jumper open [1 2] Jumper short

▲ = Manufacturer Default Setting

COM1/COM2 Power Setting

COM1, COM2 can be set to provide power to your serial device.
The voltage can be set to +5V or +12V in the BIOS.

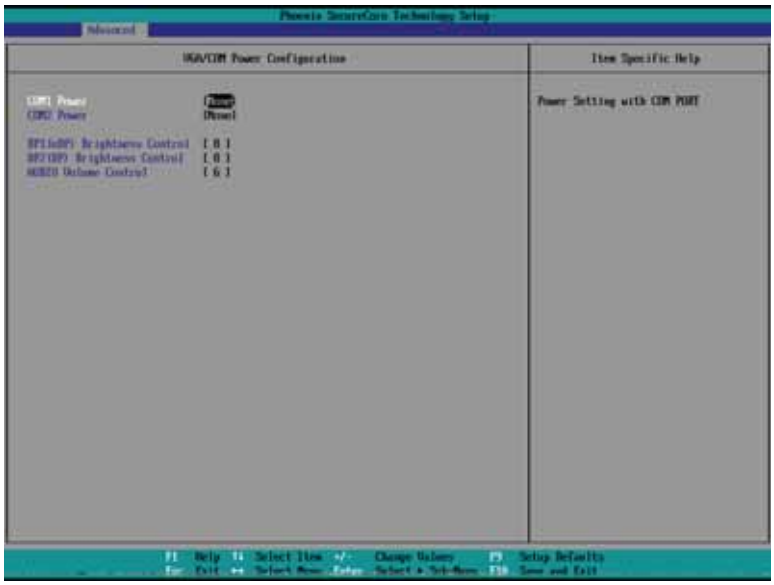

1. Power on the system, and press the <DEL> key when the system is booting up to enter the BIOS Setup utility.
2. Select the Advanced tab.
3. Select **VGA/COM Power Configuration** Ports and press <Enter> to go to display the available options.
4. To enable the power, select COM1 ,COM2 Power setting and press <Enter>. Select Power and press <Enter>. Save the change by pressing F10.