iRUGGY G10

Quick Start Guide

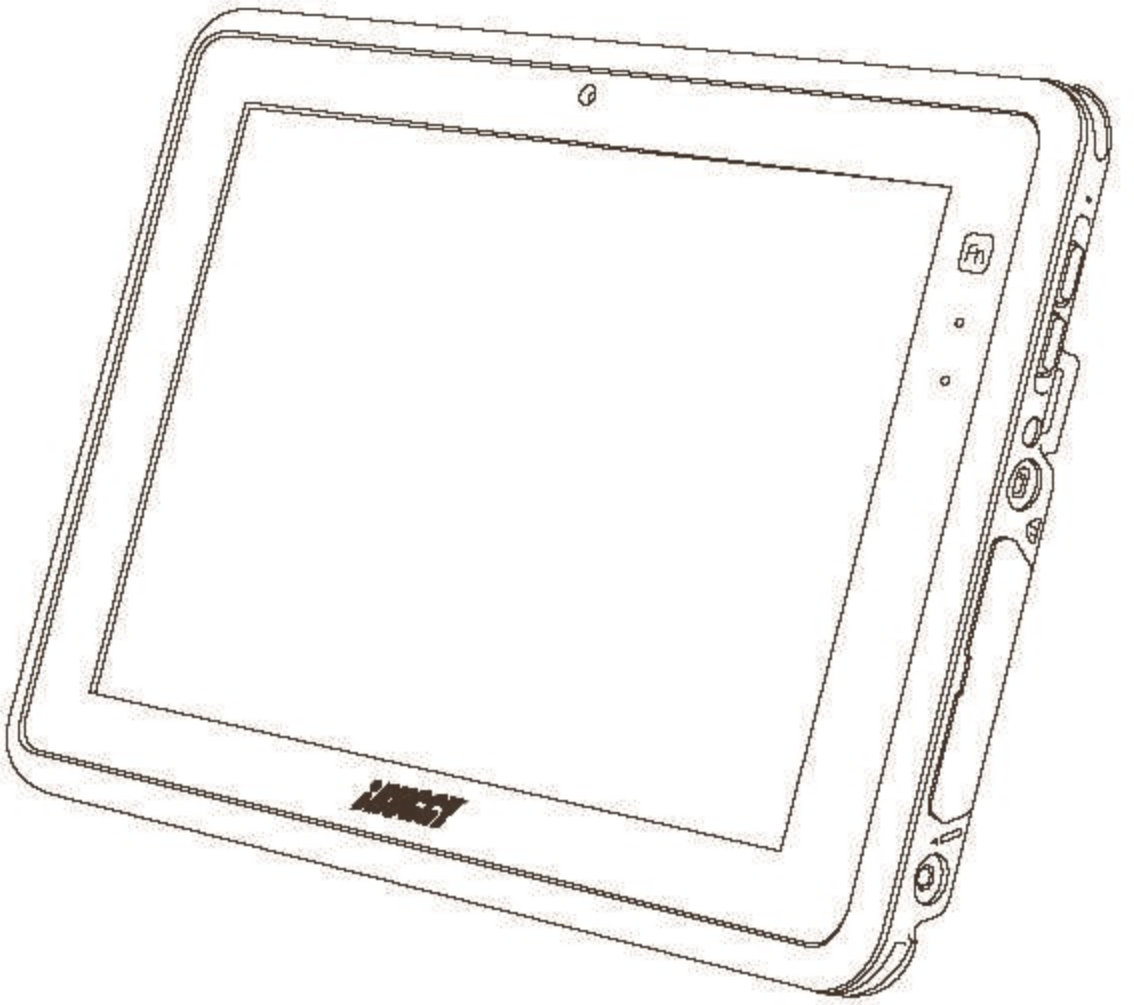

iRUGGY

CAUTION
RISK OF EXPLOSION IF BATTERY IS REPLACED BY AN INCORRECT TYPE.
DISPOSE OF USED BATTERIES ACCORDING TO THE INSTRUCTIONS

Features

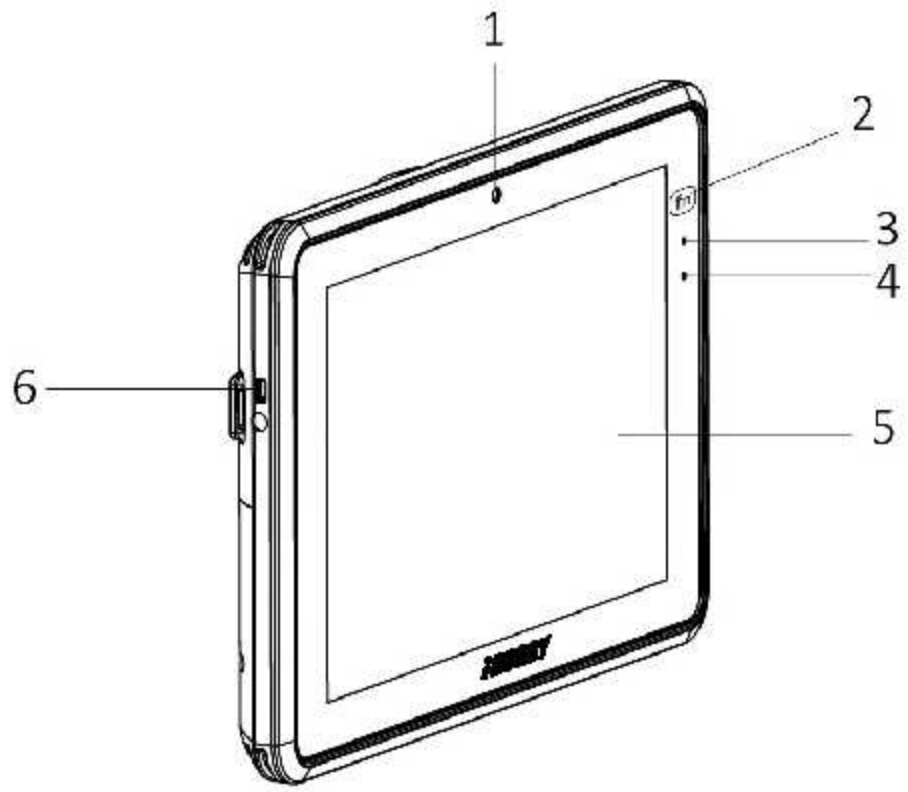

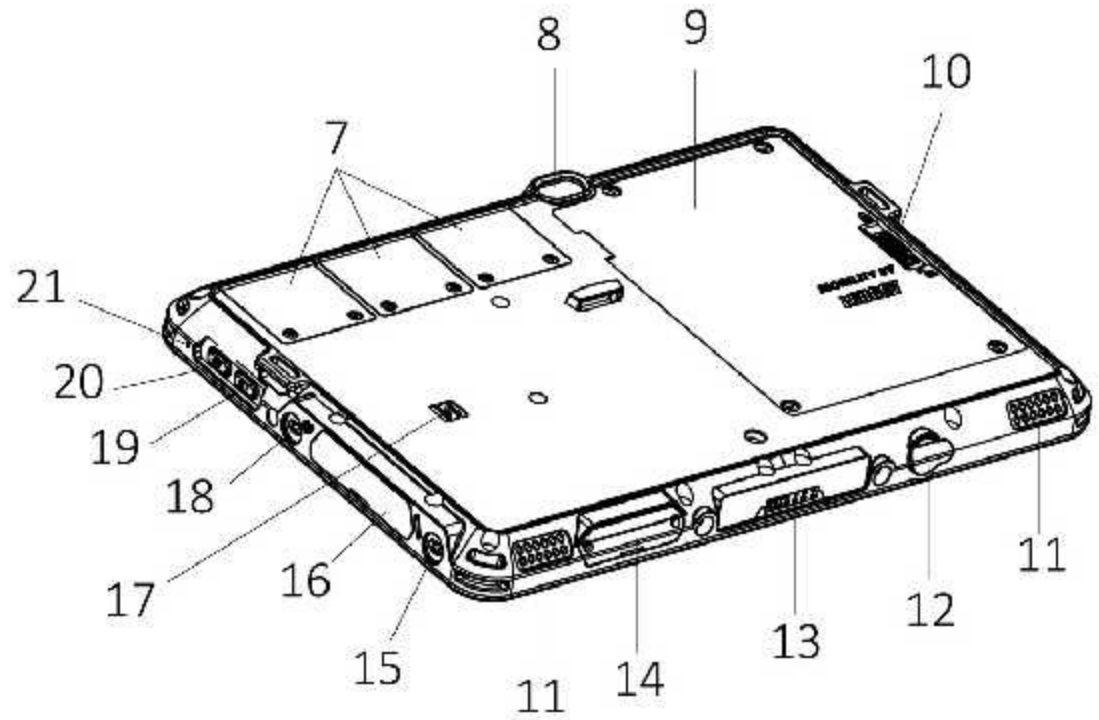

1. 2MP webcam
2. Programmable capacitive function key
3. Battery status indicator
4. Ambient light sensor
5. Touch screen
6. Kensington lock slot
7. ADD-f(x) expansion module bays (3)(for future)
8. 5MP AF camera with LED flash
9. Battery
10. Battery release latch
11. Speakers (2)
12. DC-in
13. Docking connector(for future)
14. Access cover for 3G and microSD slots
15. Stylus port
16. Access cover for USB 2.0, Micro USB (OTG) and Micro HDMI portNFC contactless card reader
17. Location of internal NFC antenna
18. Audio jack
19. in4Touch™ touch mode control
20. Power On/Off
21. Microphone

Getting Started

1. Power On / Off

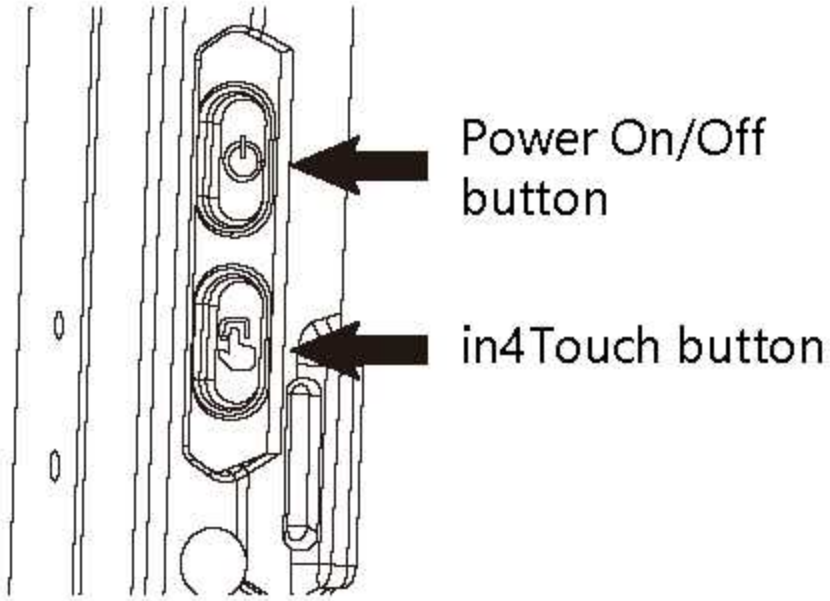

Press and hold the Power On/Off button for 2 seconds to turn on the system. You will feel a vibration. Press and hold again for 5 seconds to turn off the system, but only if unable to turn off normally through software.

Use system settings to turn off screen backlight automatically for power savings, or press button quickly to manually switch the backlight off and on.

Note: Remove the protective plastic overlay from the LCD before operation by peeling it away from one of the corners. Be sure to use a soft pointed device or fingertip to avoid scratching the screen.

2. Selecting Touch Mode

Press and hold the in4Touch Button to highlight and release to select one of 4 modes for touch operation:

Hand
Supports normal touch operation using a bare finger.

Glove
Enables touch operation when the user is wearing gloves.

Stylus
Restricts input to stylus, ignoring finger or plam contact. Must be used with the G10 stylus connected to the stylus port on the table.

Rain
Supports touch operation using bare finger while reducing interference from random drops of liquid on the screen.

3. Attaching the Hand Strap

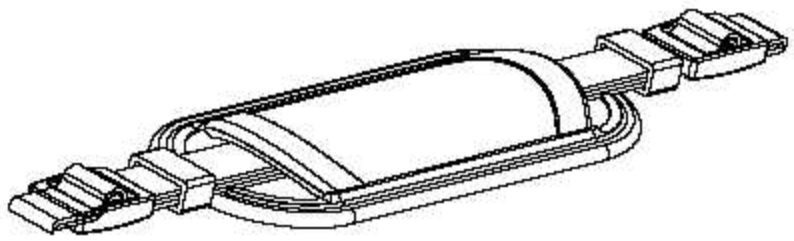

The Hand Strap may be attached between any of the four anchor points at each corner of the tablet. Thread each end of the strap into the anchor from the back side of the tablet, fold over, tighten and secure in the strap buckle. Tuck extra lengths into the grip sleeve.

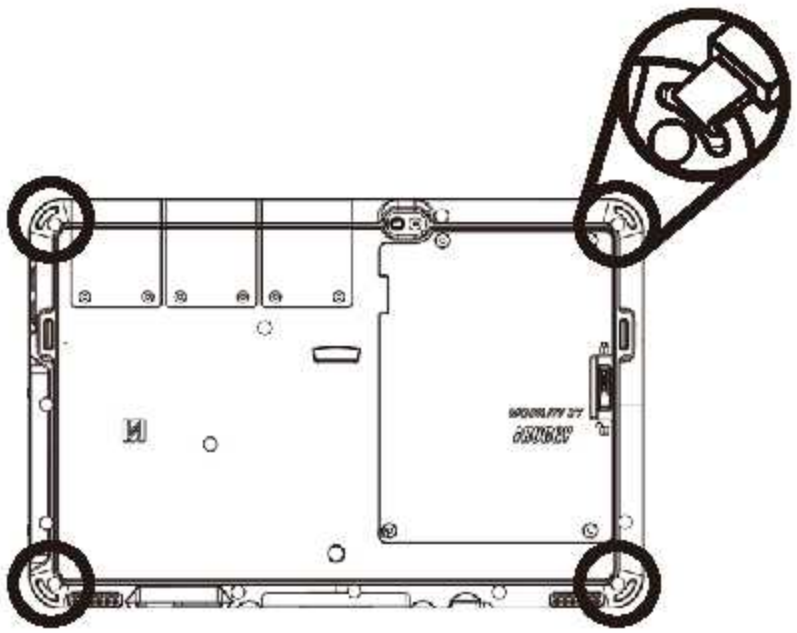

4. Charging the Battery

To charge the battery, pry open the rubber cover protecting the DC-in port and plug in the AC adaptor cable supplied with the tablet.

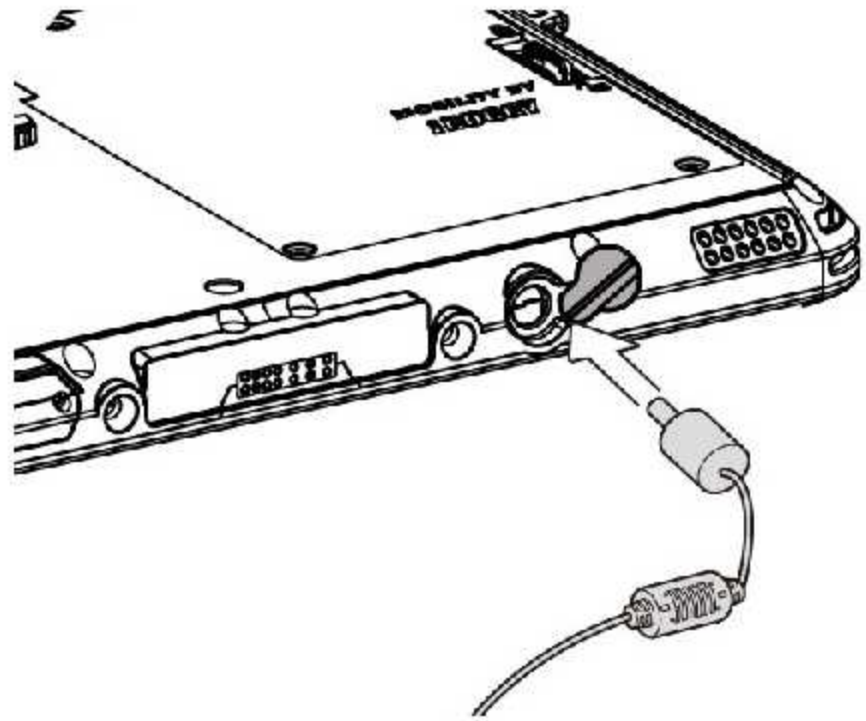

Power level is indicated by the Battery Status Indicator LED on the front of the unit

GREEN – Battery fully charged
(Tablet is plugged in or placed in dock)

ORANGE – Battery charging
(Tablet is plugged in or placed in dock)

RED/Flashing – Battery is low

RED – Battery nearly depleted

5. Removing the Battery

Power off the tablet. Slide the latch down to unlock and release the battery module.

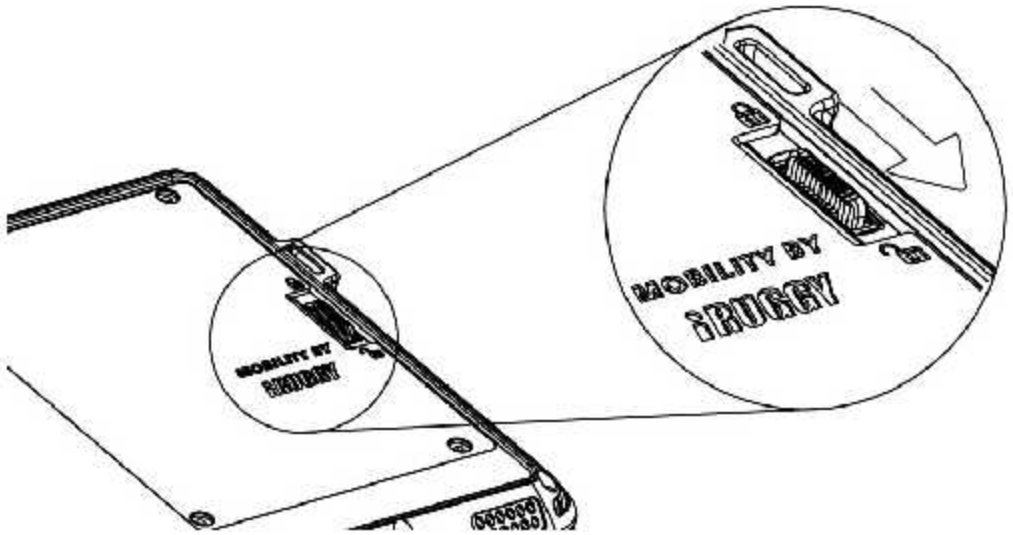

6. Installing the Battery

Angle the battery module to insert the left edge first, then press into place. Slide the latch up to the locked position.

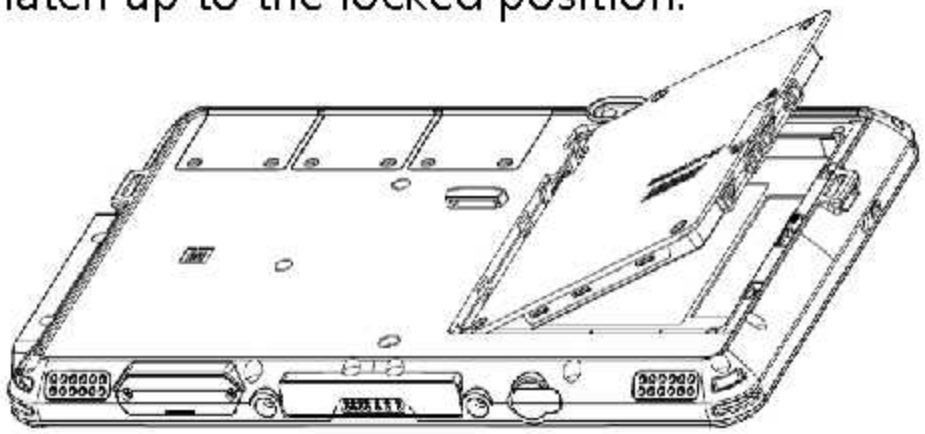

7. Installing a 3G or Micro SD card

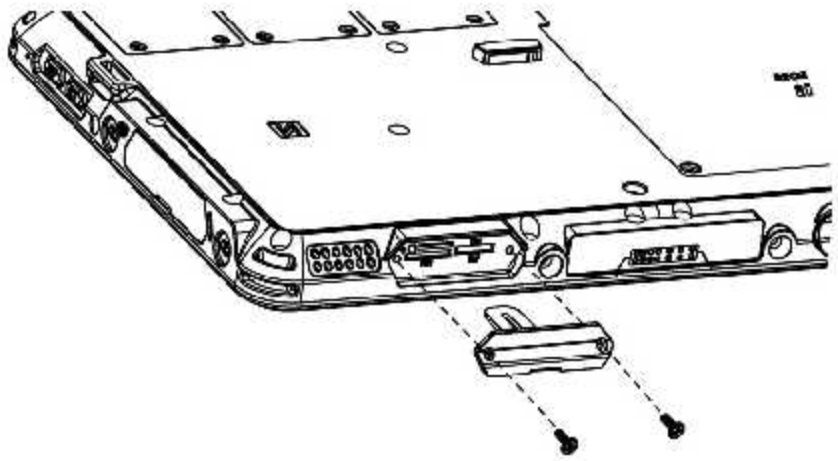

Remove screws securing the rubber seal protecting access to the 3G SIM and Micro SD card. Orient either card so the gold contact edge faces toward the front of the tablet and slide in the appropriate slot until it clicks in place.

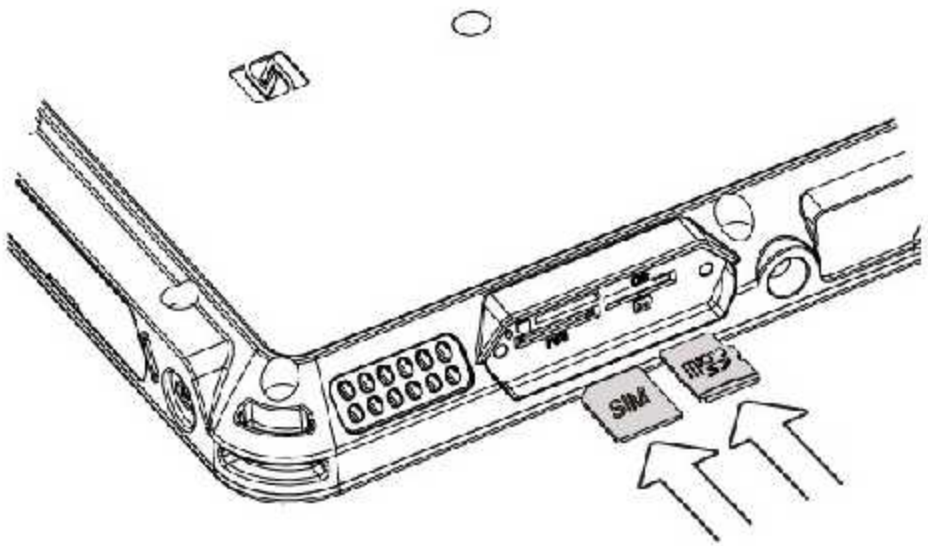

8. Installing ADD-*f(x)* Modules

Remove the 2 screws securing the cover over one or more of the module expansion bays. Some modules, such as the HF RFID ADD-*f(x)* module, may require 2 or more bays. Slide the module into place and secure with the 4 screws provided.

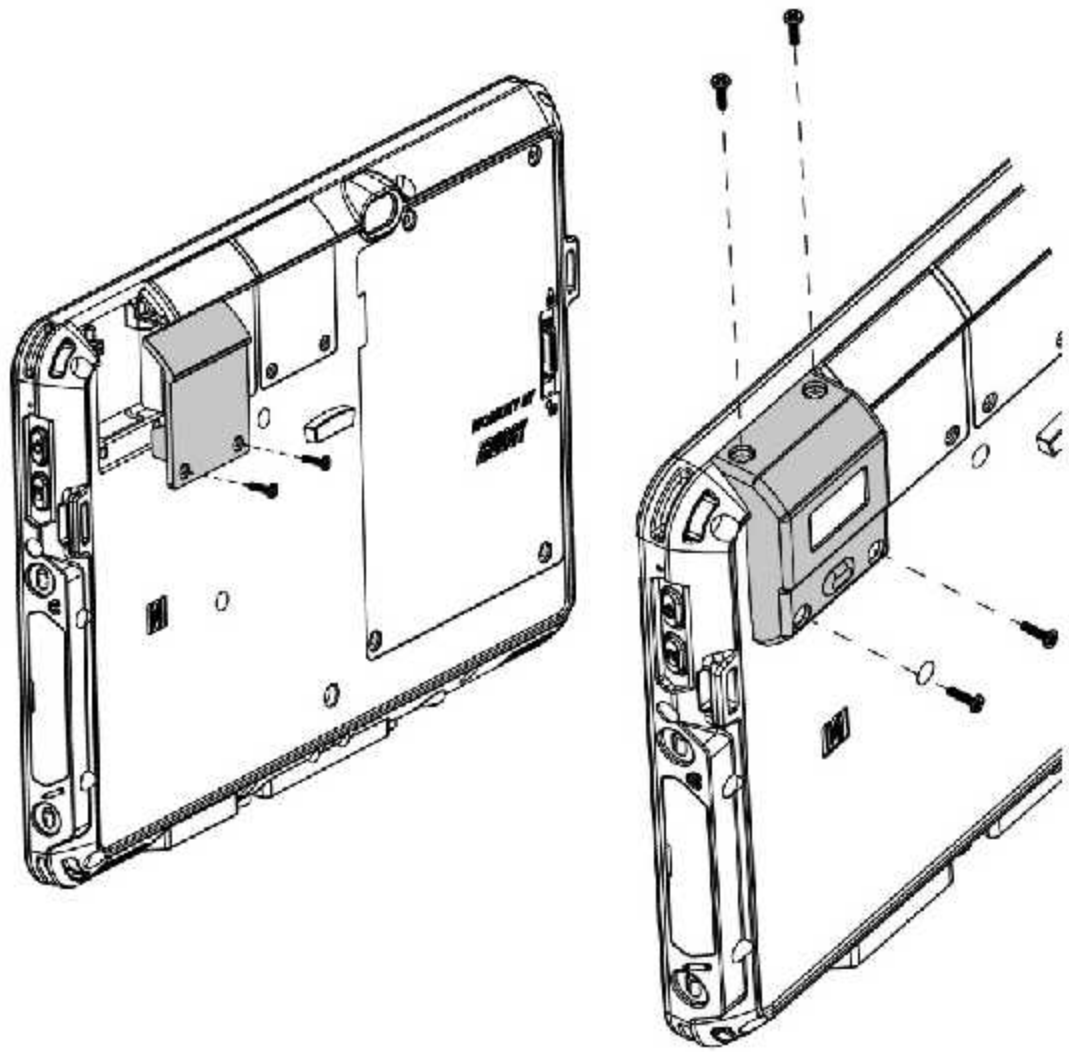

9. Installing mPOS device integration bracket

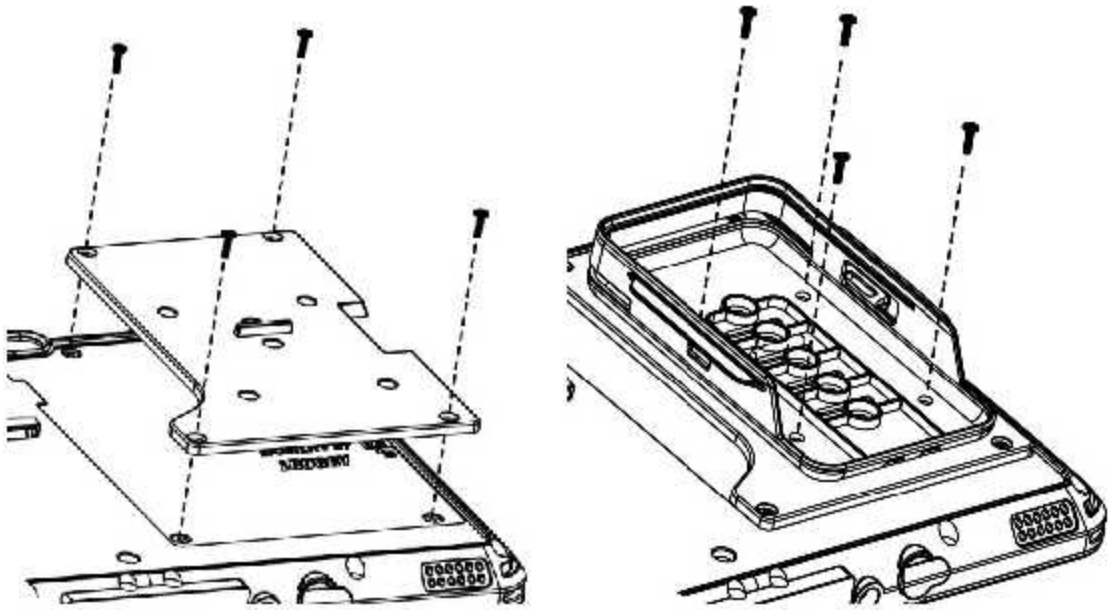

Position the universal mounting plate over the battery module as shown and attach with 4 screws provided. Then attach the mPOS bracket to the mounting plate with 4 additional screws.

Make sure to orient the bracket so that the specific mPOS device may be slide out from top or bottom as appropriate.

Setup your OS Language

When you first start up the iRUGGY G10 Mobile Tablet pre-installed with Windows 10 IoT Enterprise for Tablets, the system set up wizard will guide you through basic set up. You may choose from 5 languages during initial start-up: Dutch, English, Spanish, French or Traditional Chinese.

Additional Information

Visit www.iruggy.com to download the User Manual and check for any driver updates.

Note on wireless roaming: Seamless roaming across multiple access points can be achieved by setting up each access point with the same SSID. The UAP-PRO access points from UniFi have been tested and support this feature.

Safety Information

⚠ Battery Caution

There is a risk of explosion if using a battery not supplied by an authorized iRuggy agent. Dispose of used batteries according to local regulations. Battery should be charged at temperature between 0°C and 35°C. When battery is not in use, remove from tablet and store in a cool, dark place. Battery must be charged to 40-50% capacity every 3 months to maintain operating efficiency.

⚠ Safety

Do not attempt to charge the tablet or battery when damp or wet. All components must be dry before connecting to an external power source.

Warning for Use of Wireless Devices

Please observe all warning notices with regard to the usage of wireless devices.

Waste Electrical and Electronic Equipment (WEEE)

For EU Customers: All products at the end of life must be returned to the reseller for recycling.

P/N: xxxxxxxxxxxx Version: 1.0

FCC

Federal Communications Commission (FCC) Statement

15.21
You are cautioned that changes or modifications not expressly approved by the part responsible for compliance could void the user's authority to operate the equipment.

15.105(b)
This equipment has been tested and found to comply with the limits for a Class B digital device, pursuant to part 15 of the FCC rules. These limits are designed to provide reasonable protection against harmful interference in a residential installation. This equipment generates, uses and can radiate radio frequency energy and, if not installed and used in accordance with the instructions, may cause harmful interference to radio communications. However, there is no guarantee that interference will not occur in a particular installation. If this equipment does cause harmful interference to radio or television reception, which can be determined by turning the equipment off and on, the user is encouraged to try to correct the interference by one or more of the following measures:

-Reorient or relocate the receiving antenna.
-Increase the separation between the equipment and receiver.
-Connect the equipment into an outlet on a circuit different from that to which the receiver is connected.
-Consult the dealer or an experienced radio/TV technician for help.

This device complies with Part 15 of the FCC Rules. Operation is subject to the following two conditions:

1) this device may not cause harmful interference and

2) this device must accept any interference received, including interference that may cause undesired operation of the device.