AMWOOD

PORTABLE RETRO RADIO WITH BUILT-IN RECHARGEABLE BATTERY

SP-11

USER MANUAL

Please read carefully before use and keep for future reference.

SAFETY INSTRUCTIONS

1. Read these instructions – All the safety and operating instructions should be read before this product is operated.
2. Keep these instructions. The safety and operating instructions should be retained for future reference.
3. Heed all warnings. All warnings on the appliance and in the operating instructions should be adhered to.
4. Do not use this apparatus near water. The device should not be used near water or moisture – for example, in a wet basement or near a swimming pool, and the like.
5. Clean only with a dry cloth.
6. Do not block any ventilation openings.
7. Do not operate or place near any heat sources such as radiators, heat registers, stoves, or other apparatus (including amplifiers) that produce heat.
8. Protect the power cord from being walked on or pinched particularly at the plugs, power outlets, and at the point where they exit from the apparatus.
9. Only use attachments/accessories specified by the manufacturer.
10. Unplug the apparatus during lightning storms or when unused for long periods of time.
11. Refer all servicing to qualified personnel. Servicing is required when the apparatus has been damaged in any way, such as a damaged power supply cord or plug.
12. WARNING: To reduce the risk of fire or electric shock, do not expose this apparatus to rain or moisture. The apparatus shall not be exposed to dripping or splashing and that no objects filled with liquids, such as vases, shall not be placed on the device.
13. Only use the device in moderate climates.
14. The ventilation should not be impeded by covering the ventilation openings with items, such as newspapers, tablecloths, curtains, etc.
15. Do not place open flame sources, such as lighted candles, on the apparatus.
16. CAUTION: These servicing instructions are for use by qualified service personnel only.
17. To reduce the risk of electric shock do not perform any servicing other than that contained in the operating instructions unless you are qualified to do so.
18. WARNING: To prevent fire or shock hazard, do not expose the unit to rain or moisture.
19. Dispose per local and national quirements. Please recycle where facilities exist.

PACKAGE CONTENTS

VAS-3002	1 piece
User Manual	1 piece
Warranty Card	1 piece
USB Cord	1 Piece

DEVICE SPECIFICATIONS

Power Sources	DC 5V 1A Battery: 3.7V 1200mAh
Bluetooth Frequeny	2402-2480MHz
Audio Output Power	2 Watts Maximum
Headphone Impedance	4 ~ 32 Ohms
Operating Temperature	41 - 95 Degrees Fahrenheit
BT Operation Distance	33 FEET IN OPEN AREA
Radio Frequency	AM: 535 - 1705KHz FM: 88 - 108 MHz
Approximate Dimensions	8.27 in. (L) x 2.6 in (W) x 7.7 in. (H)

NOTE: SPECIFICATIONS & ACCESSORIES ARE SUBJECT TO CHANGE WITHOUT NOTICE.

DEVICE CONTROL FEATURES

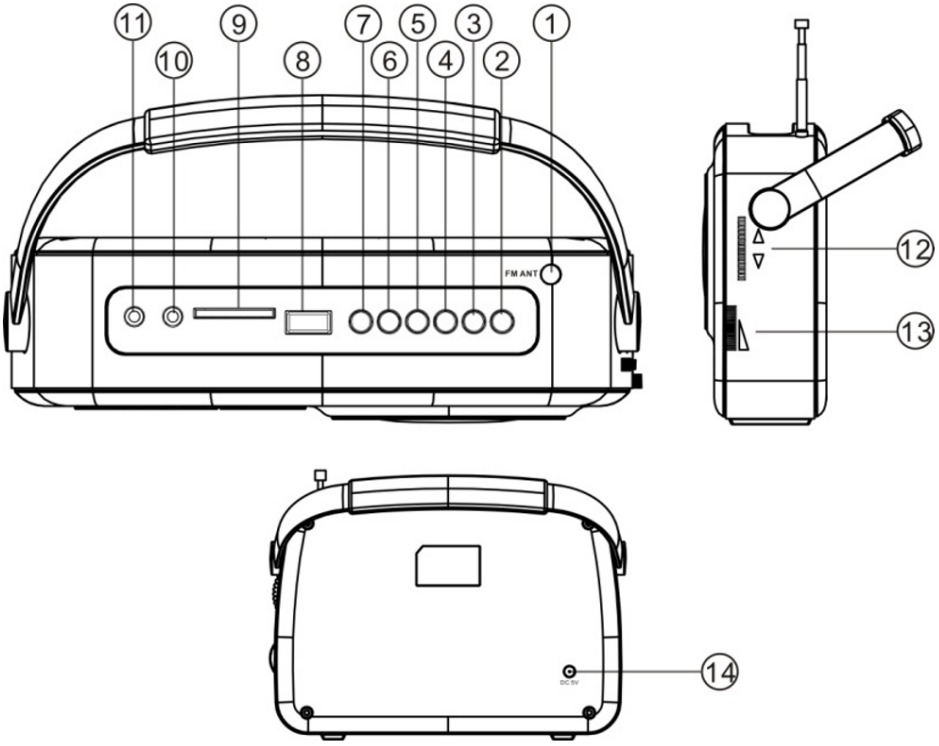

1. FM ANTENNA
2. POWER BUTTON. Press to turn power ON/OFF
3. PLAY/PAUSE BUTTON. In media play mode, press to Start or Pause playing.
4. STOP BUTTON. In SD/USB Mode, press to stop playing.
5. FUNCTION BUTTON. Press to select from playing modes: BT, USB, SD, AUX, or Radio.
   When in Radio, press to toggle between AM & FM.
6. NEXT BUTTON. In media play mode, press to select the next track. Press & hold to fast forward.
7. PREV BUTTON. In media play mode, press to select the previous track. Press & hold to fast reverse.
8. USB SOCKET
9. SD SOCKET
10. AUX IN JACK
11. PHONES JACK
12. TUNING DIAL. Rotate to select radio frequency.
13. VOLUME CONTROL DIAL. Rotate to adjust volume.
14. POWER SOCKET

USING THE DEVICE

Charging the Device

This unit is supplied with a rechargeable battery. The battery duration is 5 hours.

Battery Precautions

- **WARNING:** Do not expose battery to excessive heat, such as strong sunlight or fire.
- **IMPORTANT:** The battery compartment is not accessible by the user. It is reserved for after sales service.
- **IMPORTANT:** Do not charge the battery with the AC/DC adaptor for more than 24 hours.
- If the unit has not been used for a long time, the rechargeable battery may be completely discharged into a “sleep mode” condition. This is a characteristic of all the rechargeable batteries.
- When charging the battery for the first time, charge it for at least 30 minutes, but no longer than 24 hours.
- Use only the supplied rechargeable battery.

Battery Charging

- Connect the unit by USB cord and inserting the DC 5V IN jack, and plug the adaptor (not included) into AC wall outlet.
- While charging, the RADIO indicator light will illuminate and flash. It will turn off when the unit is fully charged.

Turning the Device ON and OFF

- Turn On the device by pressing the Power button.
- Turn Off the device by pressing the Power button.

Playing Music and Adjusting the Volume

- When in a Media Mode, press the Play/Pause Button to Play or Pause tracks from Bluetooth devices, USB Drives, and SD Cards.
- Rotate the Volume Control Dial to adjust the volume.

Selecting Device Modes

Press the Function button to select from Bluetooth, USB/SD, AUX, or RADIO.

Activating & Using Bluetooth Mode

1. Press the Function button until Bluetooth Mode is activated.
2. Using an external Bluetooth device, such as a smartphone, activate the Bluetooth function and connect to 'VICTOR VAS-3002'.
3. Press PLAY button to play or pause playback.
4. Rotate volume control to adjust volume level.
5. Press PREV/NEXT to select tracks.

NOTES:

- The Bluetooth effective receiving distance is approximately 10 meters.
- Other Bluetooth devices might operate differently. Consult device user manuals for specific instructions.

Activating & Using USB/SD Mode

1. Insert the USB or SD Drive.
2. Press PLAY button to play or pause playback.
3. Rotate volume control to adjust volume level.
4. Press PREV/NEXT to select tracks.

Activating Auxiliary Mode

1. Insert a 3.5mm cable to the AUX-in port, and connect the other end of the 3.5mm cable into the auxiliary device.
2. Use the controls of the auxiliary device to play, pause, and select tracks.

Activating & Using Radio Mode

Press the Function button until Radio Mode is selected.

- To toggle between AM or FM, press the Function button.
- To select a station, rotate the TUNING dial.
- To increase the FM signal strength, fully extend the telescopic antenna.

FCC NOTICE

WARNING: Changes or modifications to this unit not expressly approved by the party responsible for compliance could void the user's authority to operate the equipment.

NOTE: This equipment has been tested and found to comply with the limits for a Class B digital device, pursuant to part 15 of the FCC Rules.

These limits are designed to provide reasonable protection against harmful interference in a residential installation. This equipment generates, uses and can radiate radio frequency energy and, if not installed and used in accordance with the instructions, may cause harmful interference to radio communications.

However, there is no guarantee that interference will not occur in a particular installation. If this equipment does cause harmful interference to radio or television reception, which can be determined by turning the equipment off and on, the user is encouraged to try to correct the interference by one or more of the following measures:

- Reorient or relocate the receiving antenna.
- Increase the separation between the equipment and receiver.
- Connect the equipment into an outlet on a circuit different from that to which the receiver is connected.
- Consult the dealer or an experienced radio/TV technician for help.