NetComm

User Guide

4G LTE Cat M1/NB1 Industrial IoT Serial Modem

Doc No. UG01037

Important Notice

This device, like any wireless device, operates using radio signals which cannot guarantee the transmission and reception of data in all conditions. While the delay or loss of signal is rare, you should not rely solely on any wireless device for emergency communications or otherwise use the device in situations where the interruption of data connectivity could lead to death, personal injury, property damage, data loss, or other loss. NetComm Wireless accepts no responsibility for any loss or damage resulting from errors or delays in transmission or reception, or the failure of the NTC-100to transmit or receive such data.

Safety and Hazards

Do not connect or disconnect cables or devices to or from the USB port, SIM card tray, Ethernet port or the terminals of the Molex power connector in hazardous locations such as those in which flammable gases or vapours may be present, but normally are confined within closed systems; are prevented from accumulating by adequate ventilation; or the location is adjacent to a location from which ignitable concentrations might occasionally be communicated.

Copyright

Copyright© 2018 NetComm Wireless Limited. All rights reserved.

The information contained herein is proprietary to NetComm Wireless. No part of this document may be translated, transcribed, reproduced, in any form, or by any means without prior written consent of NetComm Wireless.

Trademarks and registered trademarks are the property of NetComm Wireless Limited or their respective owners. Specifications are subject to change without notice. Images shown may vary slightly from the actual product.

Note – This document is subject to change without notice.

Save our environment

When this equipment has reached the end of its useful life, it must be taken to a recycling centre and processed separately from domestic waste.

The cardboard box, the plastic contained in the packaging, and the parts that make up this device can be recycled in accordance with regionally established regulations. Never dispose of this electronic equipment along with domestic waste. You may be subject to penalties or sanctions under the law. Instead, ask for disposal instructions from your municipal government.

Please be responsible and protect our environment.

Document history

This guide covers the following products:

NetComm Wireless - 4G LTE Cat M1/NB1 Industrial IoT Serial Modem

VER.	DOCUMENT DESCRIPTION	DATE
v1.0	Initial document release	19 July 2018

Table i. - Document revision history

© NetComm Wireless 2018

Contents

Introduction 8

Target users 8
Prerequisites 8
Notation 8

Safety and product care 9

Transport and handling 9

Product introduction 10

Product features 10
Connect legacy equipment 10
Network and service flexibility 10
Universal installation 10
Custom application 10
SMS control 10

Package contents 11

Accessories 11

Physical dimensions and indicators 12

LED indicators 12

Physical dimensions 13

Interfaces 14

Hardware installation 15

Connecting the antenna 15
Inserting the SIM card 15

Mounting the device 17

Connecting the data/power cables 18
Powering the NTC-100 serial modem via 5V Micro USB socket 18
Powering the NTC-100 serial modem via Y-cable 19

Accessing the NTC-100 via terminal emulator 20

Command Line Interface Guide 22

Command Line List 23

AT+ALL 23
AT+APN 23
AT+APN_SEP 23
AT+AUTH_TYPE 24
AT+CFUN 24
AT+CHAR_TIMEOUT 25
AT+DAILY_SMS_LIMIT 25
AT+DNS 25
AT+DYN_ENABLE 26
AT+DYN_HOST 26
AT+DYN_PASS 26

© NetComm Wireless 2018

AT+DYN_USER 26
AT+EOL....27
AT+FACTORY_RESET....27
AT+FAIL_COUNT 28
AT+FORCE_RECONNECT 28
AT+FORCE_RESET....28
AT+FTP_FILE 29
AT+FTP_HOST 29
AT+FTP_PARA....29
AT+FTP_PASS 29
AT+FTP_PATH 30
AT+FTP_RETRY....30
AT+FTP_UPLOAD=1 30
AT+FTP_USER....30
AT+GPS....31
AT+GPS_LOCATION 31
AT+HISTORY....31
AT+HW_VERSION 31
AT+IMEI 32
AT+IPV4_MTU 32
AT+IPV6_MTU 32
AT+LOCAL_IP 32
AT+LOGIN_PASS....33
AT+LOGIN_USER 33
AT+MODEM_MODE....33
AT+NO_WHITELIST 34
AT+NON_REBOOT....34
AT+PAD 35
AT+PAKBUS 35
AT+PDP_TYPE....36
AT+PING....36
AT+PING_ACC_TIMER 36
AT+PING_IP1....36
AT+PING_IP2....37
AT+PING_TIMER 37
AT+PING_WATCHDOG 37
AT+REPLY_CMD_ERROR 37
AT+SAVE....38
AT+SERIAL_BAUD....38
AT+SERIAL_FLOW....39
AT+SERIAL_FORMAT 39
AT+SERIAL_MODE....40
AT+SERIAL_ON_START....40
AT+SERIAL_PARITY....41
AT+SERVER 42
AT+SMS 42
AT+SMS_ACK....43
AT+SMS_DIAGNOSTICS....43
AT+SMS_PASSWORD....44
AT+STATUS....44
AT+STATUS_FORMAT....44
AT+TCP_RETRY 45
AT+TCP_TIMEOUT....45
AT+USER_PASS 46
AT+VERSION....46

© NetComm Wireless 2018

AT+WHITELIST 46

General Operation 47

PAD mode 47
PPP mode 47
PSTN mode 47

Configuration through SMS 48

execute clear 48
execute factory_reset 48
execute pdpcycle 48
execute pdpdown 48
execute pdpup 48
execute reboot 48
execute save 48
get apn 48
get apn_sep 48
get ccid 49
get daily_sms_limit 49
get fail_count 49
get force_reconnect 49
get force_reset 49
get ftp_para 49
get gps 49
get gps_location 49
get hw_version 49
get imei 49
get modem_mode 49
get module_watchdog 49
get pdp_type 50
get ping_acc_timer 50
get ping_ip1 50
get ping_ip2 50
get ping_timer 50
get ping_watchdog 50
get ping=[domain name / IP address] 50
get serial_on_start 50
get settings 50
get status 50
get version 51
get web_file 51
get web_host 51
get web_pass 51
get web_path 51
get web_port 51
get web_retry 51
get web_user 51
serv=xxxx 51
set apn_sep 52
set apn+=xxxxx 52
set apn=xxxxx 52
set at=xxxx 52
set auth_type=x 52
set baud=xxx 52
set daily_sms_limit=xxx 52
set dyn_enable=0,1 52
set dyn_host=xxx 52
set dyn_pass=xxx 52
set dyn_user=xxx 53
set fail_count 53
set force_reconnect=xxx 53
set force_reset=xxxxx 53
set ftp_file=xxx 53
set ftp_host=xxx 53

© NetComm Wireless 2018

set ftp_pass=xxx....53
set ftp_path=xxx....53
set ftp_retry=xxx....53
set ftp_user=xxx....53
set gps=x....53
set ipv4_mtu....54
set ipv6_mtu....54
set modem_mode=x....54
set module_watchdog....54
set no_whitelist=x....54
set non_reboot=0,1....54
set pad=0,1,2,3,4....54
set pdp_type=xxx....54
set pdpauth=<username>,<password>....54
set ping_acc_timer....54
set ping_ip1....54
set ping_ip2....55
set ping_timer....55
set ping_watchdog=0,1....55
set reply_cmd_error=x....55
set serial_mode....55
set serial_on_start=0,1....55
set server= ip address/hostname, port....55
set sms=XXXXXXXXXX,"message content"....55
set smspassword=XXXXXX....55
set web_file....55
set web_host....56
set web_pass....56
set web_path....56
set web_port....56
set web_retry....56
set web_upload=1,2....56
set web_user....56
set whitelist=+XXXXXXXXXXX....56
Upload....57

NanoFit to DE-9 Serial/Power Adapter Cable....58

Electrical Specifications....58
Environmental Specifications / Tolerances....59

Product Service and Support....60

Troubleshooting....60

FAQs 61

Appendix A: Tables....62

Safety and product care....63

© NetComm Wireless 2018

Introduction

This document details the process of configuring the NTC-100 device via a terminal emulation program (such as PuTTY) as well as mounting and deployment advice.

Target users

This document is intended for system integrators or experienced hardware installers who are comfortable with all aspects of IP based networking and possess an understanding of serial-based technologies such as dialup modems, AT commands and legacy data collection devices.

Prerequisites

A computer with a terminal emulation program (such as PuTTY), a serial port, an appropriate power supply and a device to connect to the NTC-100 modem after configuration has been completed. A SIM card in 2FF format is required for cellular connection.

Notation

The following symbols are used in this user guide:

The following note provides useful information.

The following note requires attention.

The following note provides a warning.

© NetComm Wireless 2018

Safety and product care

The NTC-100 offers a hardened industrial enclosure making it suitable for a variety of remote deployment locations.

With reference to the unpacking, installation, use and maintenance of your electronic device, the following basic guidelines are recommended:

- Installation, configuration and disassembly should be performed by trained personnel only.
- Do not use or install this product near water to avoid fire or shock hazard. Avoid exposing the equipment to rain or damp areas.
- Do not use or install this product in extremely hot or cold areas. Ensure that the device is installed in an area where the temperature is within the supported operating temperature range (-30°C to 70°C).
- Arrange any cables in a manner such that they are not likely to be stepped on or have items placed on them.
- Ensure that the voltage and rated current of the power source match the requirements of the device. Do not connect the device to an inappropriate power source.
- Use only a clean, dry cloth to wipe the device. Never apply chemical cleaners on the device.

WARNING:

Disconnect the power line from the device before servicing.

Transport and handling

When transporting the NTC-100, we recommend using the original packaging. This ensures the product will not be damaged.

Important – In the event that the product needs to be returned, ensure it is securely packaged with appropriate padding to prevent damage during courier transport.

© NetComm Wireless 2018

Product introduction

Product features

The NTC-100 is a rugged 4G LTE Cat M1/NB1 Industrial IoT Serial Modem that enables wireless data communication and supports SCADA (Supervisory Control and Data Acquisition) systems. It comes equipped with RS232 serial data connectivity and a Micro USB 2.0 port for the real-time monitoring and control of machines in remote locations.

Connect legacy equipment

Avoid the cost of replacing or upgrading existing assets that run critical processes. The cost-effective NTC-100 sends data to any IP enabled device using RS-232 serial data. Ideal for SCADA use in areas such as manufacturing, utilities, construction and agriculture, the NTC-100 enables the remote collection, monitoring and control across a wide range of IoT applications.

Network and service flexibility

Featuring a multi-mode data module, the NTC-100 supports remote deployments and allows you to choose between a variety of Cat M1/NB1 IoT networks.

Universal installation

Deploy IoT applications in any environment with access to a wide input voltage range, extreme temperature tolerance (-30˚C to 70˚C) and a lockable SIM tray. For easy installation, the compact NTC-100 also includes a DIN rail and flexible wall mount options including a removable mounting bracket.

Custom application

Take advantage of the custom NetComm Wireless application with the capacity to: transparently transfer serial port traffic over the Internet via TCP or UDP using the built-in Packet Assembler and Disassembler (PAD) functionality; configure a periodic reboot to ensure the modem is always accessible and connect to a DynDNS account to update the NTC-100's IP address when not using a static IP address.

SMS control

Reduce onsite visits and save costs using advanced diagnostics and control via SMS to query status information and settings, execute commands and configure settings.

© NetComm Wireless 2018

Package contents

The NTC-100 package includes:

- 1 x NTC-100 serial modem
- 1 x Y-cable (Nano-fit to DE-9 and DC power input)
- 1 x DIN rail mounting bracket
- 1 x Torx screw
- 1 x Quick start guide

If any of these items are missing or damaged, please contact NetComm Support immediately by visiting the NetComm Support website at: http://support.netcommwireless.com/ .

Accessories

Additional cables are available for purchase separately. Contact your NetComm Wireless sales representative to order additional cables. Refer to the table below for the product codes.

ACCESSORY NAME	PRODUCT CODE
Y-Cable (DE-9 female to 10-pin + DC5521 female)	MCBL-00004
Straight cable (10-pin Nano to 8P8C)	MCBL-00003
Straight cable (10-pin Nano to open cable)	MCBL-00005

© NetComm Wireless 2018

Physical dimensions and indicators

LED indicators

The NTC-100 serial modem uses two LEDs to display the current system and connection status.

LED INDICATOR	STATUS	DESCRIPTION
Status	Off	The power is off.
	Flashing Red	Device error.
	Flashing Green	The NTC-100 is powering up.
	Solid Green	The NTC-100 is powered up and connected to network.
Network	Off	No signal.
	Intermittently Red (on 30 seconds, off 30 seconds)	No SIM detected.
	Blinking Red (displays red once every 2 seconds)	SIM detected but not connected, e.g SIM is PIN locked.
	Blinking Red, Amber or Green	Registered to network with poor (red), medium (amber) or strong (green) signal strength.
	Flashing Red, Amber or Green	Data being transferred with poor (red), medium (amber) or strong (green) signal strength.

© NetComm Wireless 2018

Physical dimensions

Below are the physical dimensions of the NTC-100 as well as the physical dimensions of the mounting bracket which can be used to attach the NTC-100 to a Type-O DIN Rail or to provide a wall / ceiling mount.

Figure 1 – NTC-100 Dimensions

NTC-100 DIMENSIONS	
Length	80 mm
Width	50 mm
Depth	20 mm
Weight	60 grams *(without mounting bracket and antenna)*

Table 1 – NTC-100 Dimensions

© NetComm Wireless 2018

Interfaces

The following interfaces are available on the NTC-100:

#	INTERFACE	FUNCTION
1	10-pin Nano-Fit™ connector	Provides a serial interface via a standard Windows modem for AT command communication and dial-up networking. The serial modem may also be powered from this interface using the Y-cable. Refer to the Technical Data section of this manual for more information.
2	Micro USB 2.0 port	Provides a serial interface via a virtual COM port for AT command communication and dial-up networking. Requires that the Quectel driver is installed. The NTC-100 may be powered from the Micro USB 2.0 port.
3	Reset button	The reset button is multifunctional and can be used to reboot to the main operating system, reboot to recovery or reset the device to factory default settings. Press and hold the reset button for less than 5 seconds to reboot the device in normal mode. The Status LED flashes green for 5 seconds and then the device reboots. Press and hold the reset button for between 5 and 15 seconds to reboot to recovery mode. The Status LED flashes amber for 5 seconds then the device reboots into recovery mode. Press and hold the reset button for between 15 and 20 seconds to reset the device to factory default settings. The Status LED flashes red for 5 seconds then the device reboots with factory default settings.
4	SIM card slot	Push-push SIM connector compatible with 2FF format SIM cards.
5	Cellular antenna socket	SMA Female connector for use with a suitable LTE antenna.

Table 2 - Interfaces

Note – The driver required for the Micro USB virtual COM port is available from the NTC-100 Product Support page at: http://support.netcommwireless.com/product/m2m/NTC-100.

© NetComm Wireless 2018

Hardware installation

Connecting the antenna

Connect the antenna to the SMA connector on the NTC-100 serial modem by placing it on the SMA connector and turning it in a clockwise direction.

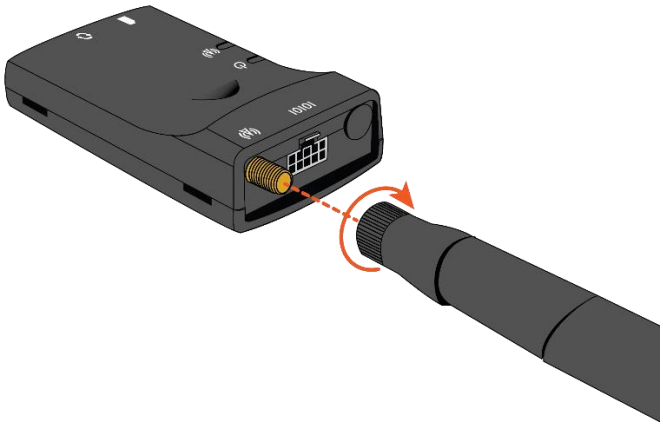

Inserting the SIM card

Ensure that the NTC-100 is not connected to the power cable before proceeding.

1 Lift the cover from the right side. This reveals the Micro USB 2.0 port and the reset button.

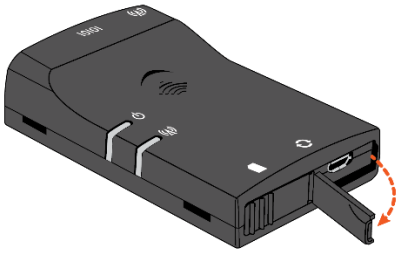

Figure 2 – Opening the side panel

2 Slide the cover to the right to reveal the SIM card slot.

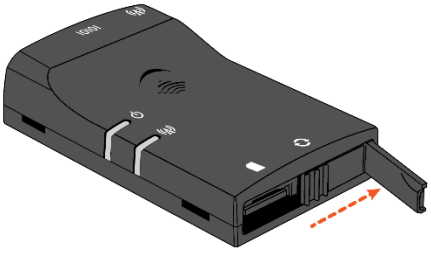

Figure 3 – Revealing the SIM card slot

© NetComm Wireless 2018

3 Insert the SIM card into the slot with the gold SIM conductor pins facing down. Push the SIM card in until it locks in place. To remove the SIM card, push it in again and it will unlock.

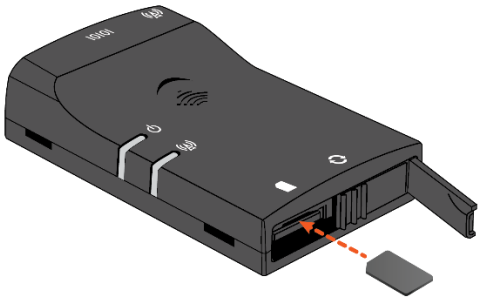

Figure 4 - Inserting a SIM card into the NTC-100 SIM card slot

4 Slide the cover back to the left and then push the right side closed.

5 To lock the protective cover, fasten the provided Torx screw into the hole below the SIM card slot on the bottom of the device using a T6 Torx driver.

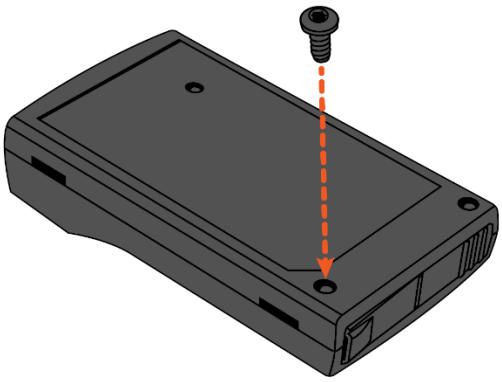

Figure 5 – Securing the SIM card slot

© NetComm Wireless 2018

Mounting the device

The NTC-100 can be mounted on the wall or a DIN rail by using the mounting bracket. The mounting bracket is made from polyamide, which is a flexible material.

DIN rail mounting

The NTC-100 serial modem mounting bracket has been designed to fit a TS 35 Type-O DIN rail with a 25mm core.

Bend the mounting bracket at the bend line so that the ridges are able to 'hold' onto the DIN rail edges as per the diagram below. Alternatively, if the end of the DIN rail is open, you can slide the bracket on to the rail. You also have the option of securing the mounting bracket further by screwing it into place on the rail.

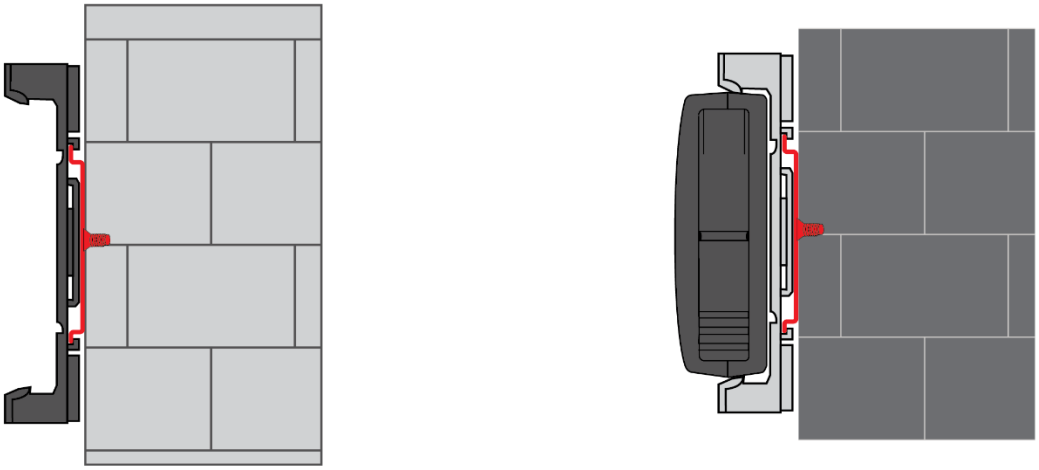

Figure 6 – DIN rail mounting

Wall mounting

Select the location where you would like to attach the NTC-100 serial modem. Attach the mounting bracket to the chosen wall or ceiling by using the 3 screw holes (screws not included).

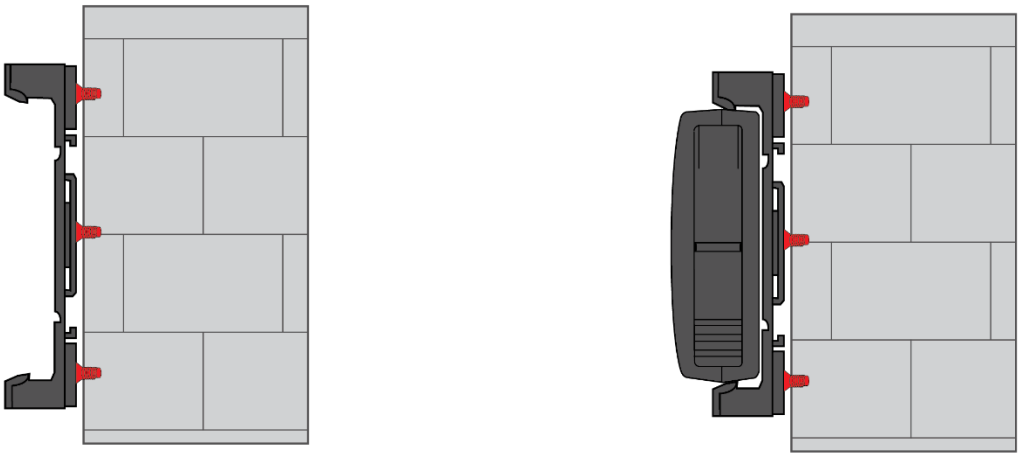

Figure 7 – Wall mounting

© NetComm Wireless 2018

Connecting the data/power cables

The NTC-100 serial modem may be connected and powered by:

- The built-in 5V Micro USB socket (USB cable not included)

OR

- The 10-pin power/data connector using the included Y-cable.

Powering the NTC-100 serial modem via 5V Micro USB socket

The NTC-100 serial modem features a USB port which can optionally be used for serial connectivity, terminal emulation, firmware installation or for establishing a PPP internet connection. The USB port enumerates a number of endpoints after the USB port driver is installed.

1 Connect a standard USB Type A to USB Micro Type B cable (not included) between the NTC-100 serial modem and a powered USB port on your device (e.g. computer). The USB cable provides the NTC-100 serial modem with power and an emulated serial port input.

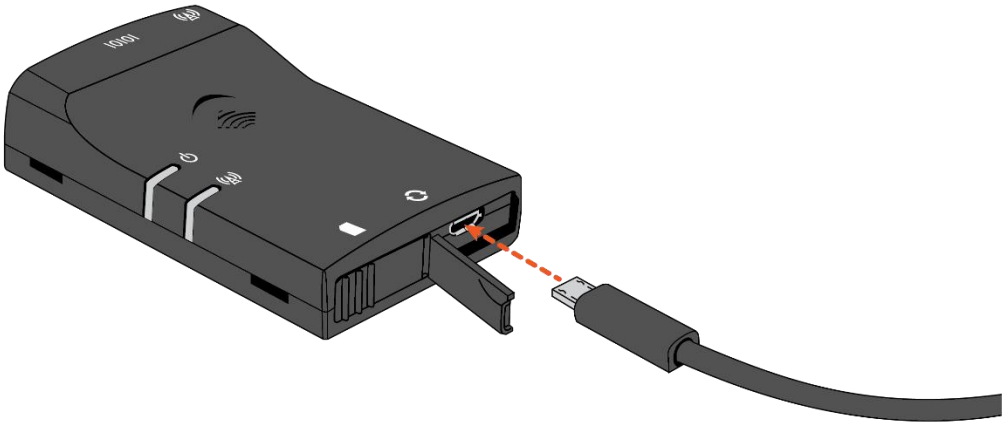

Figure 8 – Inserting the USB cable

2 For USB port communication, you must install a driver compatible with the NTC-100 serial modem's embedded Quectel BG96 cellular module. The Windows drivers are available from the NTC-100 serial modem product page on the NetComm Wireless website (www.netcommwireless.com/product/m2m/ntc-100) or from the Quectel website.

3 After the download has completed, install the driver by double-clicking on the downloaded file and following the installer prompts.

4 Open the **Control Panel** and then **Device Manager.** The NTC-100 serial modem appears under **Ports** with three Quectel USB entries.

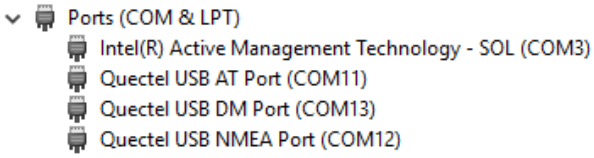

© NetComm Wireless 2018

The COM port used for each port is displayed in brackets next to each port type. For terminal access, take note of the COM port assigned to the **Quectel USB AT Port.** In the screenshot above, it is COM11. For further instructions, see the **Accessing the NTC-100 via terminal emulator** section of this guide.

Important – It is not possible to use the mini-USB and Serial connection concurrently. Make sure any open connection on the Serial port is disabled before connecting via the mini-USB cable.

Powering the NTC-100 serial modem via Y-cable

The included Y-cable features a breakout cable providing a DC Jack. Connect the Serial plug to a Serial port on your device (e.g. computer) and then connect a 5-36V power source to the DC Jack to power the unit. Connect the 10-pin plug into the 10-pin connector on the NTC-100 serial modem.

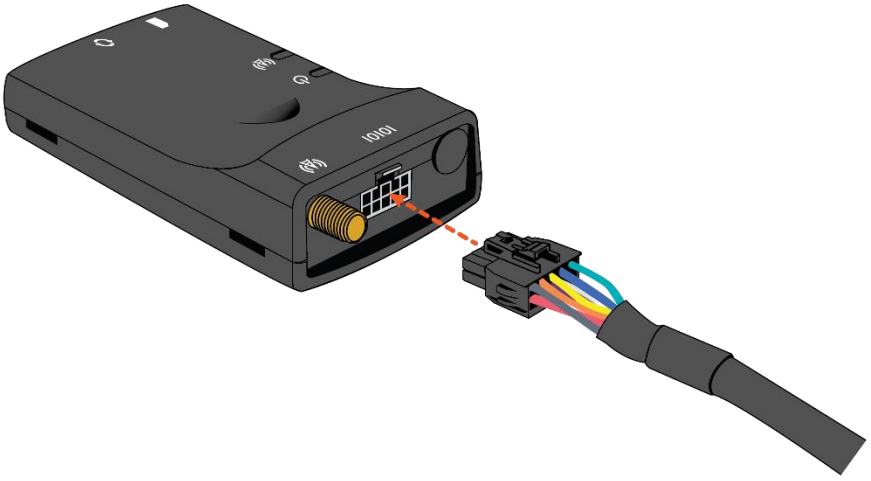

Figure 9 – Powering the NTC-100 serial modem via Y-cable

After powering up, the NTC-100 serial modem is ready to establish a serial communication link. See the next section for instructions on accessing the NTC-100 serial modem via terminal emulator.

© NetComm Wireless 2018

Accessing the NTC-100 via terminal emulator

To access the NTC-100 using a terminal emulator:

1 Using your terminal emulator, create a new connection to the COM port assigned to the connected serial port, with the bitrate set to 115200.

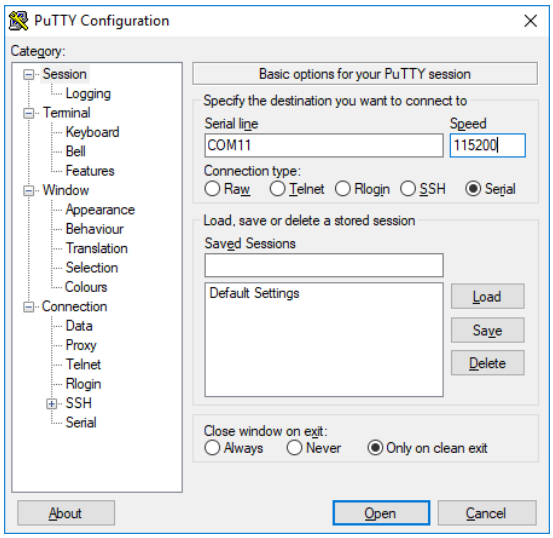

2 In the terminal window that appears, type any character. A login prompt appears.

a At the Username prompt type `root` then press **Enter**.

b At the Password prompt, type `admin` then press **Enter**.

c Type `AT`. If the NTC-100 serial modem is connected, it replies with `OK`.

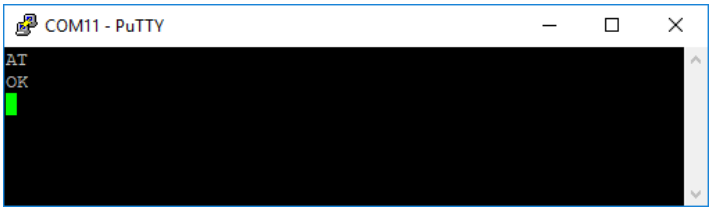

If you are using another terminal emulator and are required to enter more serial options, the following table lists the correct settings:

SERIAL OPTIONS	
Port	As assigned by your system. Refer to Device Manager on Windows.
Baud rate	115200
Data bits	8
Parity	None
Stop bits	1

Table 3 – Serial Options

© NetComm Wireless 2018

Using a terminal emulator such as PuTTY, the NTC-100 can be configured to perform customised operations.

If you are unable to type **`at`** and receive a response, check that you have selected the correct COM port for the NTC-100. Alternatively, try to open a connection using a physical COM port with a DE-9 serial/power adapter cable attached.

© NetComm Wireless 2018

Command Line Interface Guide

The NTC-100 comes pre-loaded with a NetComm Wireless custom application. This application allows the NTC-100 to operate in different modes, providing additional functionality and support for a number of terminal commands specific to this application. These commands can be used locally via the serial interface to send or receive serial data to or from TCP/UDP servers (typically another NTC-100) using EGPRS/Cat-M1/Cat-NB1 connections. The syntax for using the commands in the command line and over SMS differ slightly and are detailed in the following sections.

Important – Installing another custom application will cause the NetComm Wireless custom application to cease functioning as only one custom application may be used at a time

The NTC-100 has 3 modes:

NUMBER	MODE	DESCRIPTION
0	PPP mode	In this mode, a Dumb Terminal Emulator (DTE) can get an IP address from the Serial Interface. A PPP connection can be established between the DTE and the NTC-100.
1	PAD/IP mode	In this mode, the NTC-100 acts as a Serial/IP gateway device converting asynchronous serial data to IP data across the cellular network. The NTC-100 can be configured as a TCP Client, TCP Server, UDP client or UDP server.
2	PSTN modem mode	In this mode, the NTC-100 application creates a tunnel between the modem and a DTE. The DTE can directly access the modem AT commands.

Table 4 - NTC-100 modes

The NTC-100 modem has 4 PAD modes available:

NUMBER	MODE	DESCRIPTION
0	Disabled	In this mode, the Serial to TCP gateway function is disabled and the NTC-100 is in configuration mode. This is the default mode.
1	TCP Client	The NTC-100 acts as a TCP client and transfers TCP data between the serial and IP connections.
2	TCP Server	The NTC-100 acts as a TCP server and accepts incoming IP connections and transfers data between serial and IP connections.
3	UDP Client	The NTC-100 acts as a UDP client and transfers UDP data between the serial and IP connections.
4	UDP Server	The NTC-100 acts as a UDP server and transfers UDP data between the serial and IP connections.

Table 5 - NTC-100 PAD modes

© NetComm Wireless 2018

Command Line List

The following is a complete list of commands for the NetComm Wireless custom application. These commands can only be accessed via the Serial port in configuration mode (AT+PAD=0):

AT+ALL

Description: Displays a list of all supported AT commands.

Usage: To display all AT commands, enter:

```
AT+ALL?
```

AT+APN

Description: Sets the Access Point Name (APN) used to connect to the broadband network. The default setting is *telstra.internet*.

Usage 1: To set the APN

```
AT+APN=xxxx
```

where 'xxxx' is the APN that you wish to use.

Usage 2: To retrieve the currently configured APN

```
AT+APN?
```

Example: To set the APN to 'testAPN' enter

```
AT+APN=testAPN
```

AT+APN_SEP

Description: Sets the separation character to use when specifying multiple APNs using the AT+APN command. Valid characters are "|", "/" , "[" , "]". The default is "|".

Usage 1: To set the APN separator:

```
AT+APN_SEP=x
```

where 'x' is an option listed below.

Usage 2: To retrieve the currently configured APN

```
AT+APN_SEP?
```

Options: |, /, [,]

Example: To set the APN separator to /, enter

```
AT+APN_SEP=/
```


© NetComm Wireless 2018

AT+AUTH_TYPE

Description: This command is used to set authentication type when a username and password are configured for an APN.

Usage 1: To set the authentication type, enter:

```
AT+AUTH_TYPE=x
```

Where 'x' is an option number.

Usage 2: To retrieve the currently configured authentication type, enter:

```
AT+AUTH_TYPE?
```

Usage 3: To display the authentication options, enter:

```
AT+AUTH_TYPE=?
```

Options:

0 None *(default)*

1 PAP

2 CHAP

3 PAP or CHAP

Example: To set the authentication type to PAP, enter:

```
AT+AUTH_TYPE=1
```

AT+CFUN

Description: This is a standard AT command which resets the device.

Usage: To reset the device

```
AT+CFUN=1,1
```


© NetComm Wireless 2018

AT+CHAR_TIMEOUT

Description: By default, data received from the serial interface is not buffered. This can be changed to a value up to 65535 seconds, expressed as a factor of 100ms. After this delay, data will be sent out regardless of end of line input.

Usage 1: To configure the character timeout

```
AT+CHAR_TIMEOUT=xxx
```

where 'x' is an integer to be multiplied by 100ms between 0 and 255.

Usage 2: To retrieve the currently configured character timeout value

```
AT+CHAR_TIMEOUT?
```

Help:

```
AT+CHAR_TIMEOUT=?
```

Options: 0 disable (always use delimiters instead)

1 – 255 * 100ms

Example: To configure the character timeout to 1 second, enter

```
AT+CHAR_TIMEOUT=10
```

AT+DAILY_SMS_LIMIT

Description: This command is used to set a maximum number of SMS messages that the NTC-100 may send each day. When the maximum number of sent messages is reached in a day, the NTC-100 processes any commands sent to it but will not send any SMS messages to the sender. A day begins from the moment the feature is enabled, however, the limit is set to its original value if the module is rebooted using **AT+CFUN=1,1** or **AT+FORCE_RESET=XXX**.

The valid range of daily SMS messages is 5 to 255.

Usage:

```
AT+DAILY_SMS_LIMIT=XXX
```

where 'x' is an integer between 5 and 255.

Example: To set a maximum daily limit of SMS messages to 100, enter:

```
AT+DAILY_SMS_LIMIT=100
```

AT+DNS

Description: Retrieves the NTC-100's allocated DNS address.

Usage:

```
AT+DNS?
```


© NetComm Wireless 2018

AT+DYN_ENABLE

Description: Instructs the NTC-100 to enable updating its IP address to the configured Dynamic DNS server.

Usage:

```
AT+DYN_ENABLE=x
```

where 'x' is an option number

Help:

```
AT+DYN_ENABLE=?
```

Options:

0 disable (default)

1 enable

Example: To set the NTC-100 to enable star updates to the Dynamic IP address table, enter

```
AT+DYN_ENABLE=1
```

AT+DYN_HOST

Description: Instructs the NTC-100 to use the supplied hostname to perform an IP address update.

Note: The only dynamic DNS service supported at this time is www.dyndns.org

Usage:

```
AT+DYN_HOST=XXXX
```

where "XXXX" is the hostname of the dynamic DNS service.

Example: To instruct the NTC-100 to use 'testuser.dyndns.org' as the dynamic DNS hostname to perform an IP address update, enter

```
AT+DYN_HOST=testuser.dyndns.org
```

AT+DYN_PASS

Description: Configures the password for the dynamic DNS service.

Usage:

```
AT+DYN_PASS=XXX
```

Example: To set the dynamic DNS service username to 'testpass1', enter

```
AT+DYN_PASS=testpass1
```

AT+DYN_USER

Description: Configures the username for the dynamic DNS service.

Usage:

```
AT+DYN_USER=XXX
```

Example: To set the dynamic DNS service username to 'testuser', enter

```
AT+DYN_USER=testuser
```


© NetComm Wireless 2018

AT+EOL

Description: Send this command to delimit data received from the serial port. The default setting is 0x0D,0x0A.

Usage:

```
AT+EOL=xx,yy
```

where 'xx' is the hexadecimal code for the carriage return character and 'yy' is the hexadecimal code of the line feed character.

Help:

```
AT+EOL=?
```

Example: To configure the carriage return and line feed characters to 'D' and 'A', enter

```
AT+EOL=0x0D,0x0A
```

AT+FACTORY_RESET

Description: Resets the NTC-100 to factory default settings, effectively performing the following commands:

```
AT+PAD=0
AT+APN=telstra.internet
AT+USER_PASS="","
AT+FORCE_RESET=0
AT+SERVER=,1516
AT+SMS_DIAGNOSTICS=1
AT+SMS_ACK=1
AT+SMS_PASSWORD=1234
AT+EOL=0x0D,0x0A
AT+SERIAL_BAUD=115200
AT+SERIAL_FORMAT=2
AT+SERIAL_PARITY=2
AT+SERIAL_FLOW=0
AT+CHAR_TIMEOUT=0
AT+TCP_TIMEOUT=10
AT+TCP_RETRY=0 (Infinite)
AT+DYN_ENABLE=0
AT+DYN_HOST=
AT+DYN_USER=
AT+DYN_PASS=
```

The NTC-100 automatically reboots after this command is entered.

Usage:

```
AT+FACTORY_RESET=1
```

Help:

```
AT+FACTORY_RESET=?
```


© NetComm Wireless 2018

AT+FAIL_COUNT

Description: This command configures fail count for ping watchdog.

Usage:

```
AT+FAIL_COUNT=[1-65535]
```

Example: The default setting is 1. To set it to 5:

```
AT+FAIL_COUNT=5
```

AT+FORCE_RECONNECT

Description: This command enables or disables the TCP reconnect function and can be used to set the reconnect period. The difference between **AT+FORCE_RECONNECT** and **AT+TCP_TIMEOUT** is that **AT+FORCE_RECONNECT** is intended for use in situations where the TCP server is down and the NTC-100's TCP client is unaware of it. The TCP client assumes the server is still operational and hence does not reconnect. Using **AT+FORCE_RECONNECT**, you can force the TCP client to connect. The **AT+TCP_TIMEOUT** command is used for situations where the TCP client can't make a connection to the server and you want to tell it to try to connect then wait for an interval before retrying.

Usage: To force the TCP client to reconnect, enter:

```
AT+FORCE_RECONNECT=x
```

Where 'x' is an integer in seconds. When 'x' is 0, the force reconnect function is disabled. The default value is 0.

Example: To set the NTC-100 to reconnect the TCP client after waiting 10 minutes, enter:

```
AT+FORCE_RECONNECT=600
```

AT+FORCE_RESET

Description: Sets the period for which the NTC-100 will automatically reset (reboot).

Usage 1: To set the force reset period

```
AT+FORCE_RESET=xxxxx
```

where 'x' is an integer between 2 and 65535 minutes.

Usage 2: To retrieve the currently configured force reset period

```
AT+FORCE_RESET?
```

Help:

```
AT+FORCE_RESET=?
```

Options: 0 no reset

2 - 65535 minutes between a forced reset

Example: To set the NTC-100 to reboot every 60 minutes, enter

```
AT+FORCE_RESET=60
```


© NetComm Wireless 2018

AT+FTP_FILE

Description: This command sets the filename of the firmware used to perform an application firmware upgrade.

Usage:

```
AT+FTP_FILE=xxx
```

where 'xxx' is a string containing the filename of the firmware that is stored on the FTP server.

Example: To configure the FTP filename as NTC100.bin.signed, enter:

```
AT+FTP_FILE=NTC100.bin.signed
```

AT+FTP_HOST

Description: This command sets the FTP hostname or IP address used to perform an application firmware upgrade.

Usage 1:

```
AT+FTP_HOST=xxx
```

where 'xxx' is a string containing the IP address or domain name of the FTP server.

Example: To configure the FTP hostname as 123.456.789.0, enter:

```
AT+FTP_HOST=123.456.789.0
```

AT+FTP_PARA

Description: This command is used to retrieve the configured FTP settings on the modem.

Usage:

```
AT+FTP_PARA?
```

Example: To retrieve the configured FTP settings on the NTC-100, enter:

```
AT+FTP_PARA?
```

AT+FTP_PASS

Description: This command sets the password of the account used to access the FTP server when performing an application firmware upgrade over FTP.

Usage:

```
AT+FTP_PASS=xxx
```

where 'xxx' is a string containing the password of the account on the FTP server used to access the firmware file.

Example: To configure the FTP password as "password123", enter:

```
AT+FTP_PASS=password123
```


© NetComm Wireless 2018

AT+FTP_PATH

Description: This command sets the path to the firmware file stored on the FTP server used to perform a firmware upgrade.

Usage:

```
AT+FTP_PATH=xxx
```

where 'xxx' is a string containing the path to the firmware file stored on the FTP server.

Example: To configure the FTP path as /firmware/NTC-100, enter:

```
AT+FTP_PATH=firmware/NTC-100/
```

AT+FTP_RETRY

Description: This command is used to set the number of times the NTC-100 will retry an FTP firmware upgrade in the event that the FTP upgrade fails.

Usage 1:

```
AT+FTP_RETRY=XXX
```

Where 'xxx' is an integer between 0 and 255.

Usage 2:

```
AT+FTP_RETRY?
```

Example: To set the maximum number of FTP retries to 5, enter:

```
AT+FTP_RETRY=5
```

AT+FTP_UPLOAD=1

Description: This command is used to trigger the NTC-100 to contact the FTP server using the details provided by the AT+FTP_HOST, AT+FTP_FILE, AT+FTP_PATH, AT_FTP_USER and AT+FTP_PASS commands and perform a firmware upgrade.

Usage:

```
AT+FTP_UPLOAD=1
```

AT+FTP_USER

Description: This command sets the username of the account used to access the FTP server when performing a firmware upgrade over FTP.

Usage:

```
AT+FTP_USER=xxx
```

where 'xxx' is a string containing the username of the account on the FTP server used to access the firmware file.

Example: To configure the FTP username as "administrator", enter:

```
AT+FTP_USER=administrator
```


© NetComm Wireless 2018

AT+GPS

Description: This command enables or disables the GPS antenna. The default setting is **Disabled**.

Usage: **AT+GPS=x**

Where 'x' is an option number

Options: 0 Disabled

1 Enabled

Example: To turn on the GPS, enter:

AT+GPS=1

AT+GPS_LOCATION

Description: This command displays current the latitude and longitude values of the device.

Usage: **AT+GPS_LOCATION?**

Example: To retrieve the current device location, enter:

AT+GPS_LOCATION?

AT+HISTORY

Description: This command is used to retrieve the previous 250 SMS commands issued to the NTC-100.

Usage: **AT+HISTORY?**

Example: To add retrieve the last 250 SMS messages, enter:

AT+HISTORY?

AT+HW_VERSION

Description: This command displays the hardware version of the NTC-100 board.

Usage: To display the hardware version of the NTC-100, board enter:

AT+HW_VERSION?

© NetComm Wireless 2018

AT+IMEI

Description: This command retrieves the IMEI of the NTC-100.

Usage:

```
AT+IMEI?
```

Example: To print the NTC-100's IMEI to the screen, enter

```
AT+IMEI?
```

AT+IPV4_MTU

Description: This command is used to set the maximum transmission unit (MTU) for the IPv4 protocol. The default value is *1460*.

Usage 1: To set the MTU for the IPV4 protocol, enter:

```
AT+IPV4_MTU=x
```

Where 'x' is a value between 1000 and 1460.

Example: To set the MTU for the IPv4 protocol to 1000, enter:

```
AT+IPV4_MTU=1000
```

AT+IPV6_MTU

Description: This command is used to set the maximum transmission unit (MTU) for the IPv6 protocol. The default value is *1358*.

Usage 1: To set the MTU for the IPV6 protocol, enter:

```
AT+IPV6_MTU=x
```

Where 'x' is a value between 1000 and 1500.

Example: To set the MTU for the IPv6 protocol to 1000, enter:

```
AT+IPV6_MTU=1000
```

AT+LOCAL_IP

Description: Retrieves the NTC-100's allocated WAN IP address.

Usage:

```
AT+LOCAL_IP?
```


© NetComm Wireless 2018

AT+LOGIN_PASS

Description: This command configures the password required to log in to the AT interface via a serial connection.

Usage:

```
AT+LOGIN_PASS=<Password>
```

Example: The default setting is admin. To set it to pa$$w0rd:

```
AT+LOGIN_PASS=pa$$w0rd
```

AT+LOGIN_USER

Description: This command configures the username required to log in to the AT interface via a serial connection.

Usage:

```
AT+LOGIN_USER=<Username>
```

Example: The default setting is root. To set it to admin:

```
AT+LOGIN_USER=admin
```

AT+MODEM_MODE

Description: This command sets the NTC-100 into IP/PAD mode, PPP mode or PSTN mode. In PPP mode, PSTN mode customized AT commands can't be accessed when the NTC-100 is connected to the network. In order to switch between modem modes you can either run at+cgatt=0 command or take the SIM out before entering the AT+MODEM+MODE AT command. However, the SMS command to switch modem mode doesn't have this restriction.

Usage 1:

```
AT+MODEM_MODE=x
```

where 'x' is an option number.

Usage 2:

```
AT+MODEM_MODE?
```

Options:

0 PPP mode

1 IP/PAD mode (default)

2 PSTN mode

Example: To set the NTC-100 to IP mode, enter

```
AT+MODEM_MODE=1
```


© NetComm Wireless 2018

AT+NO_WHITELIST

Description: This command is used to remove a phone number from the SMS whitelist. Mobile phone numbers must be entered in the following format: +614XXXXXXXX.

Usage

```
AT+NO_WHITELIST=+XXXXXXXXXXX
```

where '+XXXXXXXXXXXX' is a mobile phone number.

Example: To remove +61412345678 from the SMS whitelist, enter:

```
AT+NO_WHITELIST=+61412345678
```

To remove +61412345678 and +61411234567 from the whitelist, enter:

```
AT+NO_WHITELIST=+61412345678,+61411234567
```

AT+NON_REBOOT

Description: This command defines whether the NTC-100 will reboot when PAD mode is changed using the AT+PAD command.

Usage 1: To set the NTC-100 to not reboot after changing PAD mode, enter:

```
AT+NON_REBOOT=0
```

Usage 2: To set the NTC-100 to reboot after changing PAD mode, enter:

```
AT+NON_REBOOT=1
```

Options:

0 no reboot (default)

1 reboot

© NetComm Wireless 2018

AT+PAD

Description: Specifies the NTC-100 PAD operation mode. To exit PAD mode, enter '+++'. This sets PAD mode to 0. This feature is used when modem_mode=1.

Usage 1: To set the operation mode

```
AT+PAD=x
```

where 'x' is an option number.

Usage 2: To retrieve the currently configured operation mode

```
AT+PAD?
```

Help:

```
AT+PAD=?
```

Options:

0 Disabled (default)

1 TCP client

2 TCP server

3 UDP client

4 UDP server

Example: To switch the NTC-100 to TCP client mode, enter

```
AT+PAD=1
```

To exit PAD mode, enter

```
+++
```

AT+PAKBUS

Description: Enables a buffer time for serial data before it is sent to the IP network. Must be used in conjunction with the **AT+CHAR_TIMEOUT** and **AT+EOL** commands.

If **CHAR_TIMEOUT** is **> 0**, serial data is buffered and checked for carriage return (EOL) characters. When PAKBUS is set to 0 and a single EOL appears, the data is sent to the IP network. If PAKBUS is 1, EOL characters must be seen on either side of the data frame before the data is sent. For example:

```
<EOL> xx xx xx xx <EOL> - data is sent
EOL><EOL> xx xx xx xx <EOL> - data is sent
<EOL> xx xx xx xx – data is not sent
EOL><EOL> xx xx xx xx – data is not sent
```

However, when **CHAR_TIMEOUT** value is reached, the NTC-100 sends all data in the buffer even if no EOL characters have appeared yet.

Usage:

```
AT+PAKBUS=x
```

where 'x' is an option number

Help:

```
AT+PAKBUS=?
```

Example: To set PAKBUS to 1, enter

```
AT+PAKBUS=1
```


© NetComm Wireless 2018

AT+PDP_TYPE

Description: This command sets the packet data protocol type for PDP context 1.

Usage: To set the packet data protocol type, enter:

```
AT+PDP_TYPE=x
```

Where 'x' is an option string.

Options: IPv4
IPv6
IPV4V6 *(default)*
PPP

Example: To set the packet data protocol type to IPv4, enter:

```
AT+PDP_TYPE=IPv4
```

AT+PING

Description: This command is used to send a ping to an internet host.

Usage:

```
AT+PING=[domain name/IP address]
```

Example: To ping www.google.com, enter:

```
AT+PING=www.google.com
```

AT+PING_ACC_TIMER

Description: This command configures the accelerated periodic ping timer for the ping watchdog.

Usage:

```
AT+PING_ACC_TIMER=[60-65535]
```

Example: The default setting is 60. To set it to 120 seconds:

```
AT+PING_ACC_TIMER=120
```

AT+PING_IP1

Description: This command configures first destination IP address for the ping watchdog.

Usage:

```
AT+PING_IP1=<IP address/hostname>
```

Example: To set the first destination IP address to 8.8.8.8:

```
AT+PING_IP1=8.8.8.8
```


© NetComm Wireless 2018

AT+PING_IP2

Description: This command configures the second destination IP address for the ping watchdog.

Usage:

```
AT+PING_IP2=<IP address/hostname>
```

Example: To set the second destination IP address to 8.8.4.4:

```
AT+PING_IP2=8.8.4.4
```

AT+PING_TIMER

Description: This command configures the periodic ping timer for the ping watchdog.

Usage:

```
AT+PING_TIMER=[120-65535]
```

Example: The default setting is 300.To set it to 120 seconds:

```
AT+PING_TIMER=120
```

AT+PING_WATCHDOG

Description: This command is used to enable/disable ping watchdog feature.

Usage:

```
AT+PING_WATCHDOG=0,1
```

Options:
0 disabled (default)
1 enabled

Example: To enable the ping watchdog:

```
AT+PING_WATCHDOG=1
```

AT+REPLY_CMD_ERROR

Description: This command is used to enable or disable the NTC-100 from sending error replies if an invalid command is sent. Note that error replies are not sent if the password is incorrect, regardless of the status of the AT+REPLY_CMD_ERROR option. Also, AT+SMS_ACK must be enabled for this option to work. When enabled, the NTC-100 replies with an error message.

Usage 1:

```
AT+REPLY_CMD_ERROR=x
```

where 'x' is an option number.

Usage 2:

```
AT+REPLY_CMD_ERROR?
```

Options:
0 disable
1 enable (default)

Example: To enable error replies, enter:

```
AT+REPLY_CMD_ERROR=1
```


© NetComm Wireless 2018

AT+SAVE

Description: Saves any changes made to the settings using commands in this list. Changes to settings using the commands in this list do not take effect immediately and must be saved to the board's flash memory using this command, followed by a reboot.

Usage: To save settings to the onboard flash memory

```
AT+SAVE=1
```

Example: To save settings to the onboard flash memory, enter

```
AT+SAVE=1
```

Then enter

```
AT+CFUN=1,1
```

to perform a reboot so that the new settings take effect.

AT+SERIAL_BAUD

Description: Sets the baud rate used for communication between the modem and the connected device.

Usage 1: To set the baud rate

```
AT+SERIAL_BAUD=[baud]
```

Usage 2: To retrieve the currently configured baud rate

```
AT+SERIAL_BAUD?
```

Help:

```
AT+SERIAL_BAUD=?
```

Options: 300, 600, 1200. 2400. 4800, 9600, 19200, 38400, 57600, 115200 (default value), 230400.

Example: To configure the baud rate to 115200bps, enter

```
AT+SERIAL_BAUD=115200
```


© NetComm Wireless 2018

AT+SERIAL_FLOW

Description: Sets the hardware flow control used for communication between the modem and the connected device.

Usage 1: To set the flow control

```
AT+SERIAL_FLOW=x
```

where 'x' is an option number.

Usage 2: To retrieve the currently configured flow control setting

```
AT+SERIAL_FLOW?
```

Help:

```
AT+SERIAL_FLOW=?
```

Options:

0 no flow control, default value

2 hardware, RTSCTS

Example: To set no flow control enter

```
AT+SERIAL_FLOW=0
```

AT+SERIAL_FORMAT

Description: Sets the serial format used for communication between the modem and the connected device.

Usage 1: To set the serial format

```
AT+SERIAL_FORMAT=x
```

where 'x' is an option number.

Usage 2: To retrieve the currently configured serial format

```
AT+SERIAL_FORMAT?
```

Help:

```
AT+SERIAL_FORMAT=?
```

Options:

1 8 data 2 stop

2 8 data 1 stop – default value

3 7 data 2 stop

4 7 data 1 stop

Example: To set the serial format to 8 data 2 stop enter

```
AT+SERIAL_FORMAT=1
```


© NetComm Wireless 2018

AT+SERIAL_MODE

Description: This command is used to set the serial port mode of the Serial AT interface.

Usage 1: To set the serial port mode, enter:

```
AT+SERIAL_MODE=x
```

Where 'x' is an option string.

Usage 2: To display the current serial port mode, enter:

```
AT+SERIAL_MODE?
```

Options: RS232 *(default)*

RS422

RS485

Example: To set the serial port mode to RS422, enter:

```
AT+SERIAL_MODE=RS422
```

AT+SERIAL_ON_START

Description: This command configures whether the serial port initialises on power up or initialises when there are active connections. When set to 1, the serial port does not respond to AT commands as it enters into data mode.

Usage 1:

```
AT+SERIAL_ON_START=x
```

where 'x' is an option number

Usage 2:

```
AT+SERIAL_ON_START?
```

Help:

```
AT+SERIAL_ON_START=?
```

Options: 0 serial port is initialised when there are active connections (default)

1 serial port is initialised on power up

Example:

```
AT+SERIAL_ON_START=1
```


© NetComm Wireless 2018

AT+SERIAL_PARITY

Description: Sets the serial parity used for communication between the modem and the connected device.

Usage 1: To set the serial parity

```
AT+SERIAL_PARITY=x
```

where 'x' is an option number.

Usage 2: To retrieve the currently configured serial parity

```
AT+SERIAL_PARITY?
```

Help:

```
AT+SERIAL_PARITY=?
```

Options:

0 Odd

1 Even

2 No parity, default value

Example: To set no serial parity enter

```
AT+SERIAL_PARITY=2
```


© NetComm Wireless 2018

AT+SERVER

Description: Sets the TCP/UDP server IP address and port or hostname and port. In TCP Client and UDP client mode this command sets the remote TCP/UDP server IP address and remote port number. In TCP Server and UDP server mode the port number will be used as the local TCP/UDP Server port number. If a remote UDP socket wants to send back data, it must use this port number. When configured as a server, the device's local IP address should be configured in the server parameters.

Usage 1: To set the server IP address and port

```
AT+SERVER=xxx.xxx.xxx.xxx,yyyyy
```

where 'xxx.xxx.xxx.xxx' is the server IP address and 'yyyyy' is the port number

Usage 2: To set the server hostname and port

```
AT+SERVER=xxxx,yyyyy
```

where 'xxxx' is the hostname of the server and 'yyyy' is the port number. If no port number is specified, the NTC-100 uses the default port 1516.

Usage 3: To retrieve the currently configured server IP and port

```
AT+SERVER?
```

Help:

```
AT+SERVER=?
```

Options: ip address: the ip address of the server

hostname: the hostname of the server

port number: the port number of the server

Example: To set the IP address of the server to 10.1.193.11 and port to 1516, enter

```
AT+SERVER=10.1.193.11,1516
```

To set the hostname of the server to 'testhost.domain.com' and port to 8888, enter

```
AT+SERVER=testhost.domain.com,8888
```

AT+SMS

Description: Instructs the NTC-100 to send an SMS message.

Usage: To send an SMS message, enter:

```
AT+SMS=<phone>,<message>
```

Where 'phone' is a valid phone number and 'message' is the SMS message you want to send.

Example: To send an SMS message containing the text "Hello world" to mobile number +61412345678, enter:

```
AT+SMS=+61412345678,"Hello world"
```


© NetComm Wireless 2018

AT+SMS_ACK

Description: Sets the status of the SMS acknowledgment feature. When enabled, the NTC-100 sends a reply SMS to inform whether the command was successful.

Usage 1: To configure SMS acknowledgments

```
AT+SMS_ACK=x
```

where 'x' is an option number.

Usage 2: To retrieve the SMS acknowledgment status

```
AT+SMS_ACK?
```

Help:

```
AT+SMS_ACK=?
```

Options:

0 disabled

1 enabled (default)

Example: To enable SMS acknowledgments, enter

```
AT+SMS_ACK=1
```

AT+SMS_DIAGNOSTICS

Description: Sets the status of the SMS Diagnostics feature on the NTC-100.

Usage: To set the status of SMS Diagnostics

```
AT+SMS_DIAGNOSTICS=x
```

where 'x' is an option number.

Help:

```
AT+SMS_DIAGNOSTICS=?
```

Options:

0 disabled

1 enabled (default)

Example: To enable SMS Diagnostics, enter

```
AT+SMS_DIAGNOSTICS=1
```


© NetComm Wireless 2018

AT+SMS_PASSWORD

Description: Used to define the password used with the SMS Diagnostics feature. The password is limited to 6 characters. The default password is '1234'.

Usage 1: To set the SMS password

```
AT+SMS_PASSWORD=XXXXXX
```

Usage 2: To retrieve the current configured password

```
AT+SMS_PASSWORD?
```

Help:

```
AT+SMS_PASSWORD=?
```

Example: To set the password to '1234', enter

```
AT+SMS_PASSWORD=1234
```

AT+STATUS

Description: Instructs the NTC-100 to print its current status details including signal strength, Cat-M1/Cat-NB1/EGPRS connection, device uptime, connection uptime and PAD mode status.

Usage:

```
AT+STATUS?
```

Example: To print the current status to the screen, enter

```
AT+STATUS?
```

AT+STATUS_FORMAT

Description: Sets the format that information is presented in when using the AT+STATUS command.

Usage:

```
AT+STATUS_FORMAT=x
```

where 'x' is an option number

Options:

0 single line

1 multiple lines

Example: To set the output of AT+STATUS to multiple lines, enter

```
AT+STATUS_FORMAT=1
```


© NetComm Wireless 2018

AT+TCP_RETRY

Description: If the NTC-100 is operating in TCP client mode and the connection with the server is down, the application will try for the AT+TCP_RETRY number of times to re-establish the connection with the server, then it will wait for the specified TCP_TIMEOUT period and try again. The minimum value is 0 which will cause the NTC-100 to retry the connection until a connection is made while the maximum value is 10.

Usage 1: To set the TCP retry count

```
AT+TCP_RETRY=xx
```

where 'x' is an integer between 0 and 10.

Usage 2: To retrieve the currently configured TCP retry count

```
AT+TCP_RETRY?
```

Help:

```
AT+TCP_RETRY=?
```

Options:

0	Infinite (always try to connect when connection fails)
1 – 10	times to attempt reconnection

Example: To configure the NTC-100 to retry a TCP connection 10 times, enter

```
AT+TCP_RETRY=10
```

AT+TCP_TIMEOUT

Description: This command sets the TCP timeout value in seconds. If the TCP/IP connection is not working, the application will wait for this period of time to re-establish the connection. The minimum timeout period is 10 seconds while the maximum is 65535 seconds.

Usage 1: To configure the TCP timeout value

```
AT+TCP_TIMEOUT=xxxxx
```

where 'x' is an integer in seconds between 10 and 65535.

Usage 2: To read the currently configured TCP timeout value

```
AT+TCP_TIMEOUT?
```

Help:

```
AT+TCP_TIMEOUT=?
```

Example: To set the TCP timeout period to 10 seconds

```
AT+TCP_TIMEOUT=10
```


© NetComm Wireless 2018

AT+USER_PASS

Description: Sets the username and password used to connect to the broadband network associated with the APN.

Usage 1: To set the username and password

```
AT+USER_PASS=<username>,<password>
```

Usage 2: To retrieve the currently configured username and password

```
AT+USER_PASS?
```

Help:

```
AT+USER_PASS=?
```

Options: username: the user name for the broadband account

password: the password for the broadband account

Example: To configure the username as 'user1' and password as 'testpass' enter

```
AT+USER_PASS=user1,testpass
```

AT+VERSION

Description: Displays the version number of the application firmware and module firmware installed.

Usage:

```
AT+VERSION?
```

AT+WHITELIST

Description: This command is used to add a phone number to the SMS whitelist. When the first number is added to the whitelist, the whitelist is enabled and numbers that are not on the whitelist are unable to execute commands. Mobile phone numbers must be entered in the following format: +614XXXXXXXX. You may enter multiple numbers which are comma separated.

Usage:

```
AT+WHITELIST=+XXXXXXXXXXX
```

where '+XXXXXXXXXXXX' is a mobile phone number.

Example: To add +61412345678 to the SMS whitelist, enter:

```
AT+WHITELIST=+61412345678
```


© NetComm Wireless 2018

General Operation

PAD mode

Upon powering up, the application gets an IP address from the network, subscribes to the SMS service and sets up customized AT commands. By default, the device boots up in PAD=0 mode which is also a configuration mode. To log in to this mode, the default username is `root` and password is `admin`. The device can be set to PAD modes (TCP Client, TCP server, UDP Client, UDP Server mode), PPP mode or PSTN mode. If the configuration is saved, the NTC-100 will start in the configured mode upon next boot.

The application can switch to any of these modes by AT command or remotely through SMS. The serial port can be initialized while GSM/GPRS registration in progress. If the flash configuration area is empty, the default parameters are loaded. The default parameters are as follows:

Serial Port

- Baud Rate: 115200
- Data Bits: 8
- Parity: none
- Stop Bit: 1
- Serial Mode: RS232

PDP profile

- APN: telstra.internet
- User:
- Password:

Server configuration

- Server:
- Port: 1516

The NTC-100 default PAD mode is with PAD=0.

PPP mode

In PPP mode, a DTE can dial the NTC-100 with an AT dialling command and create a PPP connection between the DTE and the NTC-100. An IP address will be assigned to the DTE and it can talk to remote servers.

PSTN mode

In this mode, the NTC-100 application creates a tunnel between the DTE and the modem. The DTE can directly talk to the device module with AT commands.

© NetComm Wireless 2018

Configuration through SMS

The NTC-100 can be configured through the serial port with AT commands or remotely through SMS messages. In order to use SMS commands, the AT+SMS_DIAGNOSTICS=1 command must be issued through the AT command port.

When configuring the NTC-100 using SMS messages, all the messages must be prefixed with a password and without a space after it, for example, "1234get status". When "set" and "execute" SMS commands are received, the NTC-100 sends an acknowledgment reply message when the command has been implemented.

The following is a list of SMS commands that may be used, along with a description of their usage:

execute clear

Instructs the NTC-100 to erase all stored SMS messages.

execute factory_reset

Instructs the NTC-100 to reset to factory default settings, as per the "*AT+FACTORY_RESET*" terminal command.

execute pdpcycle

Instructs the NTC-100 to stop the current PDP session and reconnect it.

execute pdpdown

Instructs the NTC-100 to stop the active PDP session.

execute pdpup

Instructs the NTC-100 to connect the PDP.

execute reboot

Instructs the NTC-100 to perform a reboot immediately.

execute save

Instructs the NTC-100 to save the current settings to on-board flash memory.

get apn

The NTC-100 sends an SMS reply with the currently configured APN.

get apn_sep

Retrieves the currently configured separation character used when specifying multiple APNs using the "*set apn+*" command.

© NetComm Wireless 2018

get ccid

The NTC-100 replies with the SIM CCID value.

get daily_sms_limit

Retrieves the currently configured daily SMS limit.

get fail_count

Retrieves the fail count for the ping watchdog.

get force_reconnect

The NTC-100 replies with the enabled status of the force_reconnect command and the force_reconnect period.

get force_reset

The NTC-100 replies with the current FORCE_RESET period, i.e. the periodic reset frequency.

get ftp_para

This command retrieves the configured FTP settings on the NTC-100.

get gps

The NTC-100 replies with the enabled/disabled status of the GPS.

get gps_location

The NTC-100 replies with its latitude and longitude coordinates.

get hw_version

The NTC-100 replies with the hardware version of the board.

get imei

Retrieves the IMEI of the NTC-100.

get modem_mode

The NTC-100 replies with the currently configured modem mode (IP/PAD mode, PPP mode or PSTN emulation mode).

get module_watchdog

Retrieves the module watchdog status.

© NetComm Wireless 2018

get pdp_type

The NTC-100 replies with the currently configured packet data protocol type for PDP context 1.

get ping_acc_timer

Retrieves the accelerated periodic ping timer for the ping watchdog.

get ping_ip1

Retrieves the first destination IP address for the ping watchdog.

get ping_ip2

Retrieves the second destination IP address for the ping watchdog.

get ping_timer

Retrieves the periodic ping timer for the ping watchdog.

get ping_watchdog

Retrieves the ping_watchdog status.

get ping=[domain name / IP address]

Instructs the NTC-100 to send a ping to a remote host and display ping replies. For example, get ping=www.google.com.

get serial_on_start

The NTC-100 replies with the current SERIAL_ON_START flag.

get settings

The NTC-100 replies with the following information:

```
APN: testAPN
PDP: testuser@domain.com.au, test
SERVER: 10.1.193.11,1516
PAD: 1
BAUD: 115200
DYN_ENABLE: 1
DYN_HOST: testuser.dyndns.org
NON_REBOOT: 1
```

get status

The NTC-100 sends an SMS reply with the following information:

© NetComm Wireless 2018

```
IMEI:xxxxx
UpTime:xx:xx:xx
Connection UpTime:xx:xx:xx
IP:xxx.xxx.xxx.xxx
RSSI:xx
Current APN:xxxxxxxx
```

get version

The NTC-100 replies with the version of the application firmware and module firmware.

get web_file

Retrieves the file name for the module/application firmware OTA upgrade.

get web_host

Retrieves the HTTP/S server for module/application firmware OTA upgrade.

get web_pass

Retrieves the password if authentication is implemented on the HTTP/S Server for application firmware OTA upgrade.

get web_path

Retrieves the file path on the HTTP/S Server for the module/application firmware OTA upgrade.

get web_port

Retrieves the HTTP/S port for the module/application firmware OTA upgrade.

get web_retry

Retrieves the retry attempt setting if HTTP/S OTA fails.

get web_user

Retrieves the username if authentication is implemented on the HTTP/S Server for application firmware OTA upgrade.

serv=xxxx

This command sets a full set of FTP parameters allowing the NTC-100 to download and run a firmware upgrade with a single command. Use the following format:

```
1234serv=<hostname>;f=<firmware_filename>;p=<path_name>;u=<username>;p=<password>
```


© NetComm Wireless 2018

set apn_sep

Configures the separation character to use when specifying multiple APNs using the "*set apn+*" command. The characters that may be used as separators are |, [,], and /.

set apn+=xxxxx

This command is the same as *set apn=xxxxx*, but does not overwrite the existing APNs. Instead, APNs are appended to the existing list.

set apn=xxxxx

Sets the APN used to connect to the PDP session. The new APN will take effect after performing the "execute save" and "execute pdpcycle" command. This new APN won't be saved to on-board flash memory unless the "execute save" command is issued. Multiple APNs can be entered using the apn_sep character (see the *get apn_sep* command). The NTC-100 will attempt to connect to the APNs in the order specified.

set at=xxxx

This command allows you to run your own AT commands via SMS. For example, *<password>set at=at+cfun=1,1*.

set auth_type=x

Sets the authentication type when a username and password is set for the APN. Valid options are *0* (None), *1* (PAP), *2* (CHAP), *3* (PAP or CHAP).

set baud=xxx

Sets the baud rate to be used by the NTC-100. Valid baud rate values are "300, 600, 1200, 2400, 4800, 9600, 19200, 38400, 57600, 115200, 230400".

set daily_sms_limit=xxx

Sets the daily limit of SMS messages that the NTC-100 will send. This value is reset every 24 hours and when the NTC-100 is rebooted. The valid range of SMS messages to send is 5 to 255.

set dyn_enable=0,1

When this value is set to 1, the NTC-100 automatically updates the IP address from the dynamic DNS host. When this value is set to 0, the dynamic DNS feature is disabled.

set dyn_host=xxx

Sets the Dynamic DNS hostname.

set dyn_pass=xxx

Sets the Dynamic DNS password.

© NetComm Wireless 2018

set dyn_user=xxx

Sets the Dynamic DNS username.

set fail_count

Configures the fail count for the ping watchdog.

set force_reconnect=xxx

This command sets the period in seconds to wait before attempting to reconnecting to the TCP server. When set to 0, the NTC-100 will not attempt to reconnect to the TCP server.

set force_reset=xxxxx

Sets the FORCE_RESET period in minutes. Valid intervals are 2 – 65535 minutes. Setting this value to 0 disables the forced reset function.

set ftp_file=xxx

This command specifies the filename of the firmware stored on the FTP server used to perform a firmware upgrade.

set ftp_host=xxx

This command specifies the hostname or IP address of the FTP server used to perform a firmware upgrade.

set ftp_pass=xxx

This command specifies the password of the account on the FTP server used to perform a firmware upgrade.

set ftp_path=xxx

This command specifies the path to the firmware file stored on the FTP server used to perform a firmware upgrade.

set ftp_retry=xxx

This command specifies the number of times to retry an FTP firmware upgrade if a failure occurs. The default setting is 4 and the maximum is 255.

set ftp_user=xxx

This command specifies the username of the account on the FTP server used to perform a firmware upgrade.

set gps=x

Enables or disables the GPS module of the NTC-100. Valid options are *0* (off) or *1* (on).

© NetComm Wireless 2018

set ipv4_mtu

Sets the maximum transmission unit (MTU) of the IPv4 protocol. Default value is 1460. Valid values are between *1000* and *1460*.

set ipv6_mtu

Sets the maximum transmission unit (MTU) of the IPv6 protocol. Default value is 1358. Valid values are between *1000* and *1500*.

set modem_mode=x

Sets the modem mode. Valid options are *0* (PPP), *1* (IP mode), *2* (PSTN mode).

set module_watchdog

Enables/disables the module watchdog function.

set no_whitelist=x

Removes a number or numbers from the whitelist.

set non_reboot=0,1

When set to 0, the NTC-100 will not reboot when PAD mode is changed. When set to 1, the NTC-100 when PAD mode is changed.

set pad=0,1,2,3,4

Sets the NTC-100 mode of operation where "0" is "PAD disabled mode", "1" is "TCP client mode", "2" is "TCP server mode", "3" is "UDP client mode" and "4" is "UDP server mode".

set pdp_type=xxx

Sets the packet data protocol type for PDP context 1. Valid options are *IPV4, IPV6, IPV4V6, PPP*.

set pdpauth=<username>,<password>

Sets the username and password used for authentication to the PDP session.

set ping_acc_timer

Configures the accelerated periodic ping timer for the ping watchdog.

set ping_ip1

Configures the first destination IP address for the ping watchdog.

© NetComm Wireless 2018

set ping_ip2

Configures the second destination IP address for the ping watchdog.

set ping_timer

Configures the periodic ping timer for the ping watchdog.

set ping_watchdog=0,1

Enables/disables the ping watchdog feature.

set reply_cmd_error=x

When set to 1, the NTC-100 replies to incorrect commands with an SMS error message. When set to 0, the NTC-100 does not send any error replies. Note that if the password is incorrect, no error message is sent, regardless of the state of this setting. Also, the AT+SMS_ACK option must be enabled for this to work.

set serial_mode

Sets the mode of the serial port. The default mode is RS232. Valid options are *RS232, RS422, RS485.*

set serial_on_start=0,1

When this value is set to 1, the NTC-100 enables the serial port in data mode when the unit boots up. When this value is set to 0, the NTC-100 will not start the serial port in data mode on boot.

set server= ip address/hostname, port

Sets the server IP address or hostname and port that the NTC-100 will use when operating in TCP/UDP server mode.

```
1234set server=123.123.12.34,9999
```

set sms=XXXXXXXXXX,"message content"

Instructs the NTC-100 to send an SMS to a mobile phone number. For example:

```
1234set sms=0412345678,"This is a test message"
```

set smspassword=XXXXXX

Sets the SMS password required as a prefix for all SMS commands. The password may be a maximum of 6 characters in length.

set web_file

Configures the file name for the module/application firmware OTA upgrade.

© NetComm Wireless 2018

set web_host

Configures the HTTP/S server for the module/application firmware OTA upgrade.

set web_pass

Configures the password if authentication is implemented on the HTTP/S Server for application firmware OTA upgrade.

Note: Username/password authentication can be implemented in http/s server only for application firmware OTA, but not for Module firmware.

set web_path

Configures the file path on the HTTP/S Server for the module/application firmware OTA upgrade.

set web_port

Configures the HTTP/S port for the module/application firmware OTA upgrade.

set web_retry

Configures the retry attempt if HTTP/S OTA fails.

set web_upload=1,2

Triggers a firmware upgrade from an HTTP/S server.

For example:

To perform an HTTP/S OTA for the application firmware:

```
set web_upload=1
```

To perform an HTTP/S OTA for the module firmware:

```
set web_upload=2
```

set web_user

Configures the username if authentication is implemented on the HTTP/S Server for application firmware OTA upgrade.

Note: Username/password authentication can be implemented in http/s server only for application firmware OTA, but not for module firmware.

set whitelist=+XXXXXXXXXXX

Adds the number entered into a whitelist of numbers that are allowed to execute commands on the NTC-100. For example, *set whitelist=+61412345678* adds the mobile number 0412345678 to the whitelist. When this command is executed, no other numbers may execute commands.

© NetComm Wireless 2018

Upload

Issuing the upload command instructs the NTC-100 to begin the firmware upgrade process. Note that this is a case sensitive command and must begin with a capital "U".

© NetComm Wireless 2018

NanoFit to DE-9 Serial/Power Adapter Cable

The following table displays the PIN out configuration for the 10-pin power/data connector of the NTC-100.

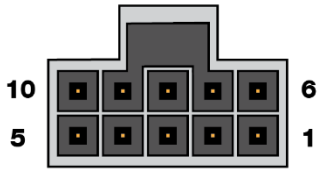

Figure 10 - NanoFit to DE-9 Serial/Power Adapter Cable

NANO-FIT PIN	DE-9 PIN	DESCRIPTION
1	2	RXD
2	1	DCD
3	7	RTS
4	9	RI
5	5	GND
6	4	DTR
7	3	TXD
8	6	DSR
9	8	CTS
10	-	Power in

Table 6 - NanoFit to DE-9 Serial/Power Connector Pin Outs

The NTC-100 is a DCE (Data Circuit-Terminating Environment), so the RTS (Ready To Send) signal is received by the NTC-100 and the CTS (Clear to Send) signal is transmitted with flow controlled from both ends.

The DCD (Data Carrier Detect) line is permanently set to one state, i.e. in the high state at the connector, GND at the chip.

Electrical Specifications

A suitable power supply is available on request or via direct purchase from the NetComm Online shop. It is recommended that the NTC-100 be powered using a 12VDC/1.5A power supply.

© NetComm Wireless 2018

Environmental Specifications / Tolerances

The industrial enclosure of the NTC-100 makes it able to operate over a wide variety of temperatures from -40˚C ~ 85˚C.

© NetComm Wireless 2018

Product Service and Support

The following section provides some assistance with issues that may be encountered when using the NTC-100 as well as providing web-based links for product specific information.

Troubleshooting

1 I am unable to send any AT commands to the NTC-100

- Verify the NTC-100 is connected to both the power supply and an appropriate COM port.
- Verify the LEDs on the front of the NTC-100 are illuminated.
- Verify your terminal program settings or device is set to use the appropriate COM port.
- Power cycle the NTC-100 by removing the power supply for 15 seconds and then reconnect it.

2 I only receive garbage text when sending AT commands to the NTC-100

- Verify that the COM port parameters have not changed since the NTC-100 was initially connected. Garbage text usually indicates that the port speed has been changed.

Note – Please refer to the AT Command reference document for more information on enabling remote access to the NTC-100.

3 The NTC-100 LEDs are not lighting up

- Verify that the NTC-100 is connected to an appropriate power supply and that an active SIM has been inserted.
- Power cycle the NTC-100 by removing the power supply for 15 seconds and then reconnect it.

4 The LED is not turning on

- Verify that the NTC-100 has sufficient signal strength to connect by checking the available signal strength via the appropriate AT command.

Note – Please refer to the AT Command reference document for more information on signal strength.

5 I am receiving an 'ERROR' response from the NTC-100

- Verify the AT command you are utilising has the correct syntax specified.

6 I am receiving an 'ERROR (##)' response from the NTC-100 with an error code that I don't understand

- Please refer to the error codes in the AT Command manual which can be found on the Quectel website to learn the meaning of the Result codes.

If you are still experiencing issues after performing the above checks, please contact NetComm Technical Support by going to: http://support.netcommwireless.com/

© NetComm Wireless 2018

FAQs

Q: Is the NTC-100 a serial modem?

A: The NTC-100 is able to operate as a serial modem, however it is also so much more. It is also able to perform the following functions:

- Creating a TCP server
- Creating UDP sockets / TCP clients and a TCP server
- Creating a PING session
- Creating an FTP session (upload and download files)
- Connect to a remote SMTP server
- Connect to a remote HTTP server
- Email sending / receiving
- Sending an MMS with one or multiple recipients

Q: What are the port settings required for the NTC-100?

A: The NTC-100 uses auto-bauding to determine the current communication port settings. This occurs when the first A or AT is sent to the NTC-100. Generally, a port speed of 115200, 8 data bits, 1 stop bit, no parity and hardware flow control should be fine. Garbage text usually indicates that the port speed has been changed.

Q: Does the NTC-100 support circuit and packet switched data?

A: The modem inside the NTC-100 supports packet switched and circuit switched communications methods.

Q: Can the micro USB port be used to connect to legacy devices?

A: No. The micro USB port requires Windows XP, Windows Vista, Windows 7, Windows 8 or Windows 10 operating systems.

Q: Why can't I connect an Ethernet (RJ45) cable to the NTC-100?

A: The NTC-100 uses a serial connection through a 10-pin NanoFit connector utilising a pin from this to provide power. It is not suitable for an Ethernet connection.

Note – Please refer to the RJ45 port pin out diagram in the Technical Data chapter for more information.

Q: Why can't I configure customized AT commands from the USB AT interface?

A: The USB AT interface talks directly to the module and has access only to module AT commands. Customized Application AT commands can be accessed only via the serial port.

© NetComm Wireless 2018

Appendix A: Tables

Table 1 – NTC-100 Dimensions....13
Table 2 - Interfaces....14
Table 3 – Serial Options....20
Table 4 - NTC-100 modes....22
Table 5 - NTC-100 PAD modes....22
Table 6 - NanoFit to DE-9 Serial/Power Connector Pin Outs....58

© NetComm Wireless 2018

Safety and product care

Electrical safety

Accessories

Only use approved accessories.

Do not connect with incompatible products or accessories.

Connection to a car

Seek professional advice when connecting a device interface to the vehicle electrical system.

Distraction

Operating machinery

Full attention must be given to operating the machinery in order to reduce the risk of an accident.

Product handling

You alone are responsible for how you use your device and any consequences of its use.

You must always switch off your device wherever the use of a mobile phone is prohibited. Do not use the device without the clip-on covers attached, and do not remove or change the covers while using the device. Use of your device is subject to safety measures designed to protect users and their environment.

Always treat your device and its accessories with care and keep it in a clean and dust-free place.

Do not expose your device or its accessories to open flames or lit tobacco products.

Do not expose your device or its accessories to liquid, moisture or high humidity.

Do not drop, throw or try to bend your device or its accessories.

Do not use harsh chemicals, cleaning solvents, or aerosols to clean the device or its accessories.

Do not paint your device or its accessories.

Do not attempt to disassemble your device or its accessories, only authorised personnel must do so.

Do not use or install this product in extremely hot or cold areas. Ensure that the device is installed in an area where the temperature is within the supported operating temperature range (-40°C to 85°C)

Do not use your device in an enclosed environment or where heat dissipation is poor. Prolonged use in such space may cause excessive heat and raise ambient temperature, which will lead to automatic shutdown of your device or the disconnection of the mobile network connection for your safety. To use your device normally again after such shutdown, cool it in a well-ventilated place before turning it on.

Please check local regulations for disposal of electronic products.

Do not operate the device where ventilation is restricted

© NetComm Wireless 2018

Installation and configuration should be performed by trained personnel only.

Do not use or install this product near water to avoid fire or shock hazard. Avoid exposing the equipment to rain or damp areas.

Arrange power and Ethernet cables in a manner such that they are not likely to be stepped on or have items placed on them.

Ensure that the voltage and rated current of the power source match the requirements of the device. Do not connect the device to an inappropriate power source.

Small children

Do not leave your device and its accessories within the reach of small children or allow them to play with it.

They could hurt themselves or others, or could accidentally damage the device.

Your device contains small parts with sharp edges that may cause an injury or which could become detached and create a choking hazard.

Emergency & other situations requiring continuous connectivity

This device, like any wireless device, operates using radio signals, which cannot guarantee connection in all conditions. Therefore, you must never rely solely on any wireless device for emergency communications or otherwise use the device in situations where the interruption of data connectivity could lead to death, personal injury, property damage, data loss, or other loss.

Device heating

Your device may become warm during normal use.

Faulty and damaged products

Do not attempt to disassemble the device or its accessories.

Only qualified personnel must service or repair the device or its accessories.

If your device or its accessories have been submerged in water punctured or subjected to a severe fall, do not use until they have been checked at an authorised service centre.

Interference

Care must be taken when using the device in close proximity to personal medical devices, such as pacemakers and hearing aids.

Pacemakers

Pacemaker manufacturers recommend that a minimum separation of 15cm be maintained between a device and a pacemaker to avoid potential interference with the pacemaker.

© NetComm Wireless 2018

Hearing aids

People with hearing aids or other cochlear implants may experience interfering noises when using wireless devices or when one is nearby.

The level of interference will depend on the type of hearing device and the distance from the interference source, increasing the separation between them may reduce the interference. You may also consult your hearing aid manufacturer to discuss alternatives.

Medical devices

Please consult your doctor and the device manufacturer to determine if operation of your device may interfere with the operation of your medical device.

Hospitals

Switch off your wireless device when requested to do so in hospitals, clinics or health care facilities. These requests are designed to prevent possible interference with sensitive medical equipment.

Interference in cars

Please note that because of possible interference to electronic equipment, some vehicle manufacturers forbid the use of devices in their vehicles unless an external antenna is included in the installation.

Explosive environments

Petrol stations and explosive atmospheres

In locations with potentially explosive atmospheres, obey all posted signs to turn off wireless devices such as your device or other radio equipment.

Areas with potentially explosive atmospheres include fuelling areas, below decks on boats, fuel or chemical transfer or storage facilities, areas where the air contains chemicals or particles, such as grain, dust, or metal powders.

Blasting caps and areas

Turn off your device or wireless device when in a blasting area or in areas posted turn off "two-way radios" or "electronic devices" to avoid interfering with blasting operations.

© NetComm Wireless 2018

Warranty

For warranty information, visit the Warranty Info page of the NetComm Wireless website.

© NetComm Wireless 2018