VIVITAR®

ESSENTIAL COLLECTION

BLUETOOTH
CLOCK RADIO

WIRELESS

ALARM CLOCK

SNOOZE BUTTON

RECHARGEABLE BATTERY

ANSWER CALLS

V60027BT

USER'S MANUAL

™

Important Safety Precautions

When using your Vivitar Bluetooth Clock Radio, basic safety precautions should always be followed, including the following:

1. READ ALL INSTRUCTIONS BEFORE USING YOUR SPEAKER.
2. Do not use your speaker near water. Clean using a soft cloth or paper towel.
3. Do not place your speaker on any wet surfaces.
4. Do not allow children or the infirm to play with your speaker without adult supervision.
5. Do not expose your speaker to excessive heat, flames or fire.
6. Always press all buttons or switches carefully. Do not manhandle your speaker.
7. Do not use in extremely dry environments, as this can lead to static discharge during usage.
8. Do not expose your speaker to temperatures above 40°C. Keep out of direct sunlight.
9. Do not attempt to repair this product yourself. Contact a qualified service center if your speaker is in need of service.
10. Do not drop, puncture or expose your speaker to excessive trauma.
11. Your speaker is not intended for commercial use.
12. Do not place near objects that generate a strong magnetic field.
13. Unplug this device when not in use for long periods of time or during lightning storms.

⚠ CAUTION

BATTERY WARNING:

-The device is equipped with an integrated lithium ion battery. The battery cannot be replaced. Do not attempt to remove the battery from the device.
-Do not dispose of in fire or expose to excessive heat.
-Do not crush, puncture, incinerate, or short circuit external contacts.
-Please recycle or dispose of the battery properly. Contact your local recycling facilities and/or the manufacturer for further information.

Introduction

Thank you for purchasing your Vivitar Bluetooth Clock Radio, item V60027BT. You can use your speaker with iPads, iPhones, iPods and many other types of smartphones and Bluetooth devices to stream music. In order to get the best results when using this device, please read this manual first before using.

Package Contents

-Vivitar V60027BT Bluetooth Clock Radio
-Micro USB Charging Cable
-User's Manual with Warranty Information

Specifications

Bluetooth Version: V3.0
Charging Voltage: DC 5V
Battery Type: Rechargeable 1,200mAh Lithium Ion Battery
Charge Time: 6.5-7.5 Hours
Weight: 350g
Play Time: Up to 10 Hours

A Quick Look at Your Device

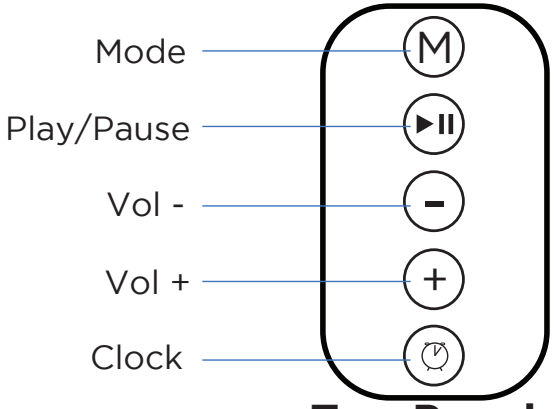

Top Panel

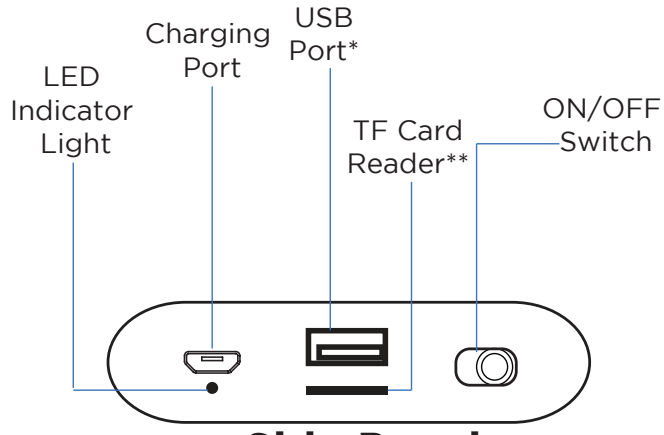

Side Panel

Display Screen

*You can insert most thumb drives or jump drives into the USB Port. Your speaker can play .MP3, music files stored on your drive. Note that the USB port cannot be used to charge your electronic devices.

**The TF Card Reader can read TF or Micro SD memory cards up to 32GB in size. Your speaker can play .MP3, music files stored on your memory card.

Charging Your Speaker

Your speaker has a built-in, rechargeable lithium ion battery. To avoid damage, do not attempt to remove the battery. The full performance of the battery is only achieved after a few charging-discharging cycles. Charge the battery fully before first use. To do so, follow the steps below:

1. Connect one end of the included micro USB charging cable to the Micro USB Charging Port on the rear of your speaker. Then plug the other end of the micro USB charging cable into a USB port on your computer or a suitable power adapter in order to recharge the internal rechargeable battery.

NOTE: The internal battery of your speaker takes approximately 6.5-7.5 hours to charge when completely drained.

2. When the battery is charging, the LED Indicator Light will turn red. The LED Indicator Light will turn off when the battery is fully charged. Unplug when charging is complete.

NOTE: Overcharging could reduce the life of the battery. A charged battery will lose its capacity if it is not used on a regular basis.

Important!
To avoid a complete discharge of the battery, charge your speaker at least once every six months.

Pairing Your Speaker with a Bluetooth Device

Your speaker can be paired with most Bluetooth devices including iPads, iPhones, iPod Touches, and most smartphones, laptops and tablets. In order to pair your speaker with a phone, follow the steps below:

1. Slide the On/Off Switch to the ON position in order to turn on your speaker. By default, your speaker will go into pairing mode. A ✱ symbol will flash on the display screen.

2. Go to the Bluetooth Manager of your Bluetooth device.

3. Search Bluetooth devices and select your speaker to start connecting.

4. Enter “0000” if your device asks for the PIN code.

5. Once paired, the LED Indicator Light will stop blinking and steadily shine blue. Note that anytime music is playing, the light will slowly blink blue every few seconds.

Switching Modes (Using the TF Card Reader Slot, USB Port & Auxiliary Input)
If a memory card is inserted in the TF Card Reader slot your speaker will automatically go into Music Mode in which music is played from the memory card. Similarly, if a thumb drive is inserted into the USB port, your speaker will automatically go into USB mode and play music from the thumb drive. If an audio source is connected through your speaker’s Auxiliary Port press the mode button repeatedly until you are in Aux mode. Repeatedly press the Mode button to switch between Bluetooth Mode, Music Mode, Aux Mode or USB Mode.

Using Your Speaker: Listening to Music

Powering Your Speaker On and OFF

1. Slide the On/Off Switch to the ON position in order to power on your speaker. If you have already paired your speaker to your Bluetooth device, they will automatically remain paired each time you power on your speaker.
2. Slide the On/Off Switch to the OFF position in order to power off your speaker.

Listening to Music

- ▶II Button: Press to play or pause a track.
- Quickly tap the “+” button to advance to the next song in a playlist.
- Quickly tap the “ -” button to go back to the previous song in a playlist.
- Press and hold the “+” button to increase the volume.
- Press and hold the “ -” button to decrease the volume.

Note: You can also adjust volume and playback settings on your phone or connected audio device.

Using the Phone Function

- Answering a Call: Quickly press the ▶II button to answer an incoming call.
- Reject an Incoming Call: Double tap the ▶II button to reject an incoming call.
- Ending a Call: Quickly press the ▶II button to end a call.

The phone function can only be used when there is a Bluetooth connection between your speaker and phone.

Using Your Speaker: Setting the Time & Alarm Time

1. Slide the On/Off Switch to the ON position in order to power on your speaker.

2. Press the ⏲ button to enter the clock mode.

3. Press and hold the ⏲ button to adjust the time.

4. The hours will start flashing on your display screen. Press the + or - buttons to adjust the hour. Press the ▶II button to confirm and move on to the next setting.

5. Next, the minutes will start flashing on your display screen. Press the + or - buttons to adjust the minutes. Press the ⏲ button to confirm and move on to the next setting.

Using Your Speaker: Setting the Time & Alarm Time

Immediately after the time is set, you can continue to set the alarm time.

6. Press the ⏲ button to set the alarm time.

7. Press and hold the ⏲ button to adjust the alarm time.

8. The hours will start flashing on your display screen. Press the + or - buttons to adjust the hour. Press the ▶II button to confirm and move on to the next setting.

9. Next, the minutes will start flashing on your display screen. Press the + or - buttons to adjust the minutes. Press the ⏲ button to confirm.

Using Your Speaker: Turning the Alarm On

Once the alarm time has been set you can turn on or turn off the alarm. By pressing and holding the ▶II button you can either turn on or turn off the alarm choosing wether or not it sounds at the time you have set. A ⏰ icon will appear on the display screen when the alarm is set to sound. It goes away when turned off.

When the alarm is sounding, you can press the ▶II button to turn it off.

Using the Radio Function

Preparing the Radio for Use

Connect one end of the included micro USB charging cable to the Micro USB Charging Port on the rear of your speaker. Then plug the other end of the micro USB charging cable into a USB port on your computer or a suitable power adapter. The Micro USB cable will act as an antenna.

Radio Mode

Press the mode button repeatedly until you are in radio mode.

Searching for Stations

Press and hold the ▶II button. Your speaker will automatically search for radio stations that it receives reception from, and save them so that when you press the + or - buttons repeatedly, you will toggle through these radio stations.

NOTE: If you have trouble receiving stations, try moving your radio to an area with clearer reception or less outside interference.

Maintenance and Care

-Before using your speaker, inspect the ports to make sure that they are clear of dust and debris before charging or inserting any cables.

-Use a soft cloth to clean your speaker. Never use any harsh chemicals or detergents. Make sure your speaker is dry before using.

-When your speaker is not in use, it should be stored in a cool, dry place.

-Never tug or yank on the USB charging cable while it is connected to your speaker. Connect and disconnect cables as carefully as possible.

-Never expose your speaker to high temperatures, extreme cold, high humidity or excessive moisture or water.

-Please recycle or dispose of your speaker properly based on the laws and rules of your municipality. Contact local recycling facilities and/or the manufacturer of your speaker for further information.

FCC Statement

Changes or modifications not expressly approved by the party responsible for compliance could void the user's authority to operate the equipment.

This device complies with Part 15 of the FCC Rules. Operation is subject to the following two conditions: (1) this device may not cause harmful interference, and (2) this device must accept any interference received, including interference that may cause undesired operation.

This equipment has been tested and found to comply with the limits for a Class B digital device, pursuant to Part 15 of the FCC Rules. These limits are designed to provide reasonable protection against harmful interference in a residential installation. This equipment generates, uses and can radiate radio frequency energy and, if not installed and used in accordance with the instructions, may cause harmful interference to radio communications. However, there is no guarantee that interference will not occur in a particular installation.

If this equipment does cause harmful interference to radio or television reception, which can be determined by turning the equipment off and on, the user is encouraged to try to correct the interference by one or more of the following measures:

-- Reorient or relocate the receiving antenna.
-- Increase the separation between the equipment and receiver.
-- Connect the equipment into an outlet on a circuit different from that to which the receiver is connected.
-- Consult the dealer or an experienced radio/TV technician for help.

FCC Radiation Exposure Statement:

This equipment complies with FCC radiation exposure limits set forth for an uncontrolled environment .

This transmitter must not be co-located or operating in conjunction with any other antenna or transmitter.

Vivitar One Year Warranty

This warranty covers the original consumer purchaser only and is not transferable.

This warranty covers products that fail to function properly UNDER NORMAL USAGE, due to defects in material or workmanship. Your product will be repaired or replaced at no charge for parts or labor for a period of one year.

What Is Not Covered by Warranty
Damages or malfunctions not resulting from defects in material or workmanship and damages or malfunctions from other than normal use, including but limited to, repair by unauthorized parties, tampering, modification or accident.

To Obtain Warranty Service and Troubleshooting Information:
Call 1-800-592-9541 in the U.S. or 0-800-917-4831 in the UK or visit our website at www.vivitar.com.

To receive Warranty service along with the name and address of an authorized product service center, the original consumer purchaser must contact us for problem determination and service procedures. Proof of purchase in the form of a bill of sale or receipted invoice, evidencing that the product is within the applicable Warranty period(s), MUST be presented in order to obtain the requested service. It is your responsibility to properly package and send any defective products along with a dated copy of proof of purchase, a written explanation of the problem, and a valid return address to the authorized service center at your expense. Do not include any other items or accessories with the defective product. Any products received by the authorized service center that are not covered by warranty will be returned unrepaired.

Vivitar One Year Warranty (continued)

NO WARRANTIES, WHETHER EXPRESS OR IMPLIED, INCLUDING, BUT NOT LIMITED TO, ANY IMPLIED WARRANTIES OF MERCHANTABILITY OR FITNESS FOR A PARTICULAR PURPOSE, OTHER THAN THOSE EXPRESSLY DESCRIBED ABOVE SHALL APPLY. DISTRIBUTOR FURTHER DISCLAIMS ALL WARRANTIES AFTER THE EXPRESS WARRANTY PERIOD STATED ABOVE. NO OTHER EXPRESS WARRANTY OR GUARANTY GIVEN BY ANY PERSON, FIRM OR ENTITY WITH RESPECT TO THE PRODUCT SHALL BE BINDING ON DISTRIBUTOR. REPAIR, REPLACEMENT, OR REFUND OF THE ORIGINAL PURCHASE PRICE - AT DISTRIBUTOR'S SOLE DISCRETION -ARE THE EXCLUSIVE REMEDIES OF THE CONSUMER. IN NO EVENT WILL DISTRIBUTOR, ITS MANUFACTURERS, OR SAKAR INT. BE LIABLE FOR ANY INCIDENTAL, DIRECT, INDIRECT, SPECIAL, PUNITIVE OR CONSEQUENTIAL DAMAGES (SUCH AS, BUT NOT LIMITED TO, DAMAGES FOR LOSS OF PROFITS, BUSINESS, SAVINGS, DATA OR RECORDS) CAUSED BY THE USE, MISUSE OR INABILITY TO USE THE PRODUCT. EXCEPT AS STATED HEREIN, NO OTHER WARRANTIES SHALL APPLY. NOTWITHSTANDING THE FOREGOING, CONSUMER'S RECOVERY AGAINST DISTRIBUTOR SHALL NOT EXCEED THE PURCHASE PRICE OF THE PRODUCT SOLD BY DISTRIBUTOR. THIS WARRANTY SHALL NOT EXTEND TO ANYONE OTHER THAN THE ORIGINAL CONSUMER WHO PURCHASED THE PRODUCT AND IS NOT TRANSFERABLE.

Some countries, states or provinces do not allow the exclusion or limitation of incidental or consequential damages or allow limitations on warranties, so limitation or exclusions may not apply to you. This warranty gives you specific legal rights, and you may have other rights that vary from state to state or province to province. Contact your authorized retailer to determine if another warranty applies. This product is manufactured, distributed and sold by SAKAR International, Inc. All other trademarks are the property of the respective owner, who has not sponsored, endorsed or approved this product.

.

TM