MET Laboratories, Inc. *Safety Certification - EMI - Telecom Environmental Simulation*
914 WEST PATAPSCO AVENUE • BALTIMORE, MARYLAND 21230-3432 • PHONE (410) 354-3300 • FAX (410) 354-3313
33439 WESTERN AVENUE • UNION CITY, CALIFORNIA 94587 • PHONE (510) 489-6300 • FAX (510) 489-6372
3162 BELICK STREET • SANTA CLARA, CA 95054 • PHONE (408) 748-3585 • FAX (510) 489-6372
13501 MCCALLEN PASS • AUSTIN, TEXAS 78753 • PHONE (512) 287-2500 • FAX (512) 287-2513

August 31, 2015

Digital Receiver Technology, Inc.
12409 Milestone Center Dr.
Germantown, MD 20876

Dear Steve Hudson,

Enclosed is the EMC Wireless test report for MPE measurements of the Digital Receiver Technology, Inc., DRT9955C-1, DRT9955C-3 as evaluated to the requirements of Title 47 of the CFR, Ch. 1 (10-1-06 ed.), Part 1, Subpart I, Title 47 of the CFR, Ch. 1 (10-1-06 ed.), Part 2, Subpart J, and RSS-102, Issue 4, March 2010.

Thank you for using the services of MET Laboratories, Inc. If you have any questions regarding these results or if MET can be of further service to you, please feel free to contact me.

Sincerely yours,
MET LABORATORIES, INC.

Jennifer Warnell
Documentation Department

Reference: (\Digital Receiver Technology, Inc.\EMC84362-MPE)

Certificates and reports shall not be reproduced except in full, without the written permission of MET Laboratories, Inc.

RF Maximum Permissible Exposure (MPE) Report
For Controlled and Uncontrolled Environments

for the

Digital Receiver Technology, Inc.
DRT9955C-1, DRT9955C-3

Tested under
the FCC Certification Rules
contained in
Title 47 of the CFR, Part 1 Subpart I & Part 2 Subpart J
&
RSS-102, Issue 4, March 2010

MET Report: EMC84362-MPE

August 31, 2015

Prepared For:

Digital Receiver Technology, Inc.
12409 Milestone Center Dr.
Germantown, MD 20876

Prepared By:
MET Laboratories, Inc.
914 W. Patapsco Ave.
Baltimore, MD 21230

RF Maximum Permissible Exposure (MPE) Report
For Controlled and Uncontrolled Environments

for the

Digital Receiver Technology, Inc.
DRT9955C-1, DRT9955C-3

Tested under
the FCC Certification Rules
contained in
Title 47 of the CFR, Part 1 Subpart I & Part 2 Subpart J
&
RSS-102, Issue 4, March 2010

Benjamin Taylor, Project Engineer
Electromagnetic Compatibility Lab

Jennifer Warnell
Documentation Department

Engineering Statement: The measurements shown in this report were made in accordance with the procedures indicated, and the emissions from this equipment were found to be within the limits applicable. I assume full responsibility for the accuracy and completeness of these measurements, and for the qualifications of all persons taking them. It is further stated that upon the basis of the measurements made, the equipment tested is capable of operation in accordance with the requirements of the FCC Rules Parts 1 and 2, and Industry Canada standards RSS-102, Issue 4, March 2010 under normal use and maintenance.

Asad Bajwa,
Director, Electromagnetic Compatibility Lab

 © 2015, MET Laboratories, Inc.

Report Status Sheet

Revision	Report Date	Reason for Revision
∅	August 31, 2015	Initial Issue.
1	August 31, 2015	Revised to reflect engineer corrections.
2	September 1, 2015	Revised to reflect additional corrections.

© 2015, MET Laboratories, Inc.

Table of Contents

I. Executive Summary 1
A. Purpose of Test 2
B. MPE Measurements and Applicable Regulations 2
II. Equipment Configuration 3
A. Overview 4
B. Test Site 4
C. Description of Test Sample 5
D. Equipment Configuration 6
E. Support Equipment 6
F. Mode of Operation 6
G. Modifications 6
a) Modifications to EUT 6
b) Modifications to Test Standard 6
H. Disposition of EUT 6
III. MPE Limits 7
A. Limits for Maximum Permissible Exposure (MPE) 8
B. Calculating MPE Distance from Antenna 9
IV. Test Equipment 27

List of Tables

Table 1. EUT Summary Table 4
Table 2. Equipment Configuration 6
Table 3. Support Equipment 6
Table 4. Test Equipment List 28

List of Figures

Figure 1. Block Diagram of Test Configuration 5

List of Photographs

Photograph 1. Test Setup 26

© 2015, MET Laboratories, Inc.

List of Terms and Abbreviations

AC	**A**lternating **C**urrent
ACF	**A**ntenna **C**orrection **F**actor
Cal	**Cal**ibration
d	**M**easurement **D**istance
dB	**D**eci**b**els
dBµA	**D**eci**b**els above one **micro**amp
dBµV	**D**eci**b**els above one **micro**volt
dBµA/m	**D**eci**b**els above one **micro**amp **per m**eter
dBµV/m	**D**eci**b**els above one **micro**volt **per m**eter
DC	**D**irect **C**urrent
E	**E**lectric Field
DSL	**D**igital **S**ubscriber **L**ine
ESD	**E**lectro**s**tatic **D**ischarge
EUT	**E**quipment **U**nder **T**est
f	**F**requency
FCC	**F**ederal **C**ommunications **C**ommission
GRP	**G**round **R**eference **P**lane
H	Magnetic Field
HCP	**H**orizontal **C**oupling **P**lane
Hz	**H**ert**z**
IEC	**I**nternational **E**lectrotechnical **C**ommission
kHz	**k**ilo**h**ert**z**
kPa	**k**ilo**pa**scal
kV	**k**ilo**v**olt
LISN	**L**ine **I**mpedance **S**tabilization **N**etwork
MHz	**M**ega**h**ertz
µH	**microh**enry
µF	**microf**arad
µs	**micros**econds
NEBS	**N**etwork **E**quipment-**B**uilding **S**ystem
PRF	**P**ulse **R**epetition **F**requency
RF	**R**adio **F**requency
RMS	**R**oot-**M**ean-**S**quare
TWT	**T**raveling **W**ave **T**ube
V/m	**V**olts **per m**eter
VCP	**V**ertical **C**oupling **P**lane

© 2015, MET Laboratories, Inc.

I. Executive Summary

 © 2015, MET Laboratories, Inc.

A. Purpose of Test

An MPE evaluation was performed to determine compliance of the Digital Receiver Technology, Inc. DRT9955C-1, DRT9955C-3, with the requirements of Part 1 and 2. All references are to the most current version of Title 47 of the Code of Federal Regulations in effect. In accordance with §2.1033, the following data is presented in support of the Certification of the DRT9955C-1, DRT9955C-3. Digital Receiver Technology, Inc. should retain a copy of this document which should be kept on file for at least two years after the manufacturing of the DRT9955C-1, DRT9955C-3, has been **permanently** discontinued.

B. MPE Measurements and Applicable Regulations

This test report presents the results of Maximum Permissible Exposure (MPE)[1] measurements performed on the Digital Receiver Technology, Inc. DRT9955C-1, DRT9955C-3, operating in the frequency ranges 869 - 894 MHz, 1930 - 1990 MHz, and 2110 - 2155 MHz. The tests were performed in accordance with TCB training material and the following parts of the FCC Rules and Regulations and Industry Canada Radio Standard Specification:

- IEEE Std. C95.1: 2005: "IEEE Standard for Safety Levels with Respect to Human Exposure to Radio Frequency Electromagnetic Fields, 3 kHz – 300 GHz"
- IEEE Std. C95.3: 2002: "IEEE Recommended Practice for Measurements and Computations of Radio Frequency Electromagnetic Fields with Respect to Human Exposure to Such Fields, 100 kHz – 300 GHz"
- FCC OET Bulletin 65, Edition 97-01: "Evaluating Compliance with FCC Guidelines for Human Exposure to Radiofrequency Electromagnetic Fields"
- FCC Supplement C to OET Bulletin 65, Edition 01-01: "Additional Information for Evaluating Compliance of Mobile and Portable Devices with FCC Limits for Human Exposure to Radiofrequency Emission."
- Subpart I, Part 1 of 47 CFR FCC Rules and Regulations, Edition 10-1-11: "Procedures Implementing the National Environmental Policy Act of 1969." Specifically, Paragraph 1.1310: "Radiofrequency Radiation Exposure Limits"
- Subpart J, Part 2 of 47 CFR FCC Rules and Regulations, Edition 10-1-11: "Equipment Authorization Procedures." Specifically, Paragraph 2.1091: "Radiofrequency Radiation Exposure Evaluation: Mobile Devices"
- FCC KDB 447498 D01 Mobile Portable RF Exposure v04: "RF Exposure and Equipment Authorization Policies"
- RSS-102, Issue 4, March 2010: "Spectrum Management and Telecommunications Radio Standards Specification. Radiofrequency Exposure Compliance of Radiocommunication Apparatus (All Frequency Bands.)"

[1] By definition, maximum permissible exposure (MPE) is rms or peak electric (or magnetic) field strength, or the plane-wave equivalent power densities associated with these fields to which a person may be exposed without harmful effect and with an acceptable safety factor.

 © 2015, MET Laboratories, Inc.

II. Equipment Configuration

© 2015, MET Laboratories, Inc.

A. Overview

MET Laboratories, Inc. was contracted by Digital Receiver Technology, Inc. to perform testing on the DRT9955C-1, DRT9955C-3, under Digital Receiver Technology, Inc.'s purchase order number 001128.

This document describes the test setups, test methods, required test equipment, and the test limit criteria used to perform compliance testing of the Digital Receiver Technology, Inc., DRT9955C-1, DRT9955C-3.

The results obtained relate only to the item(s) tested.

Model(s) Tested:	DRT9955C-1, DRT9955C-3			
EUT Specifications:	Primary Power: 120 VAC, 60 Hz			
	FCC ID: XLM9955C1 FCC ID: XLM9955C3			
	EUT Frequency Ranges:	869 – 894 MHz	1930 – 1990 MHz	2110 – 2155 MHz
	Type of Modulations:	GSM / CDMA / WCDMA	GSM / CDMA / WCDMA	CDMA / WCDMA
	Applicable FCC Rule Part:	22	24	27
Analysis:	The results obtained relate only to the item(s) tested.			
Environmental Test Conditions:	Temperature: 15-35º C			
	Relative Humidity: 30-60%			
	Barometric Pressure: 860-1060 mbar			
Evaluated by:	Benjamin Taylor			
Report Date(s):	August 31, 2015			

Table 1. EUT Summary Table

B. Test Site

All testing was performed at MET Laboratories, Inc., 914 W. Patapsco Ave., Baltimore, MD 21230. All equipment used in making physical determinations is accurate and bears recent traceability to the National Institute of Standards and Technology.

© 2015, MET Laboratories, Inc.

C. Description of Test Sample

The DRT9955C-1, DRT9955C-3 dual band RF power amplifiers used with DRT base stations operating in the cellular, PCS, and AWS bands. The DRT9955C-1 operates in the cellular and PCS bands and the DRT9955C-3 operates in the cellular and AWS bands.

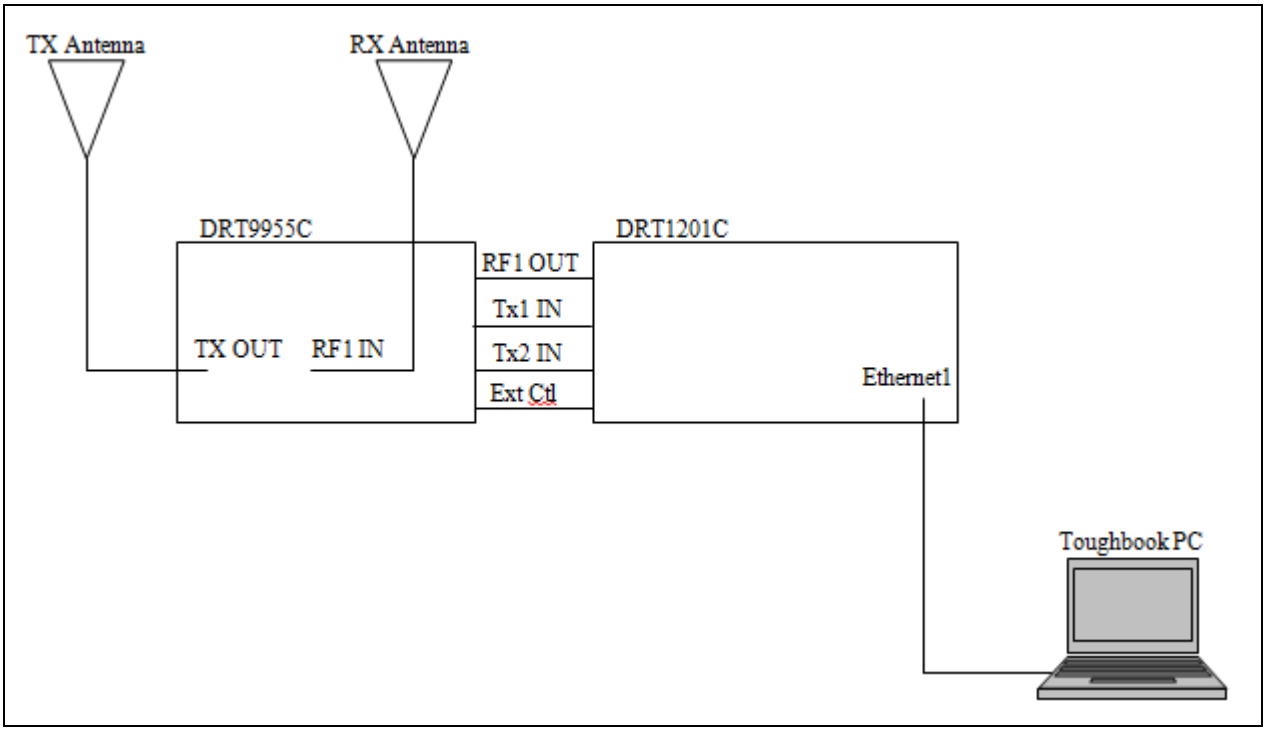

Figure 1. Block Diagram of Test Configuration

© 2015, MET Laboratories, Inc.

D. Equipment Configuration

Name / Description	Model Number	Part Number	Serial Number
TRAM	DRT9955C-1	--	240
TRAM	DRT9955C-3	--	249

Table 2. Equipment Configuration

E. Support Equipment

Ref. ID	Name / Description	Manufacturer	Model Number	Customer Supplied Calibration Data
--	Base Station	DRT	DRT1201C	--
--	Toughbook PC	Panasonic	CF-19	--

Table 3. Support Equipment

F. Mode of Operation

Operate as an RF power amplifier for DRT mobile base stations in GSM, CDMA, and WCDMA in the Cellular and AWS bands.

The DRT9955C-1 operates in the cellular and PCS bands with GSM, CDMA, and WCDMA modulation.

The DRT9955C-3 operates in the cellular band with GSM, CDMA, and WCDMA modulation and in the AWS band with CDMA and WCDMA modulation.

G. Modifications

a) Modifications to EUT
No modifications were made to the EUT.

b) Modifications to Test Standard
No modifications were made to the test standard.

H. Disposition of EUT

The test sample including all support equipment submitted to the Electro-Magnetic Compatibility Lab for testing was returned to Digital Receiver Technology, Inc. upon completion of testing.

© 2015, MET Laboratories, Inc.

III. MPE Limits

© 2015, MET Laboratories, Inc.

A. Limits for Maximum Permissible Exposure (MPE)

Requirements: FCC Guidelines for evaluating exposure to RF Emissions, from the FCC OET Bulletin 65, Evaluating Compliance with FCC Guidelines for Human Exposure to Radiofrequency Electromagnetic Fields.

(A) Limits for Occupational/Controlled Exposure

Frequency Range (MHz)	Electric Field Strength (E) (V/m)	Magnetic Field Strength (H) (A/m)	Power Density (S) (mW/cm^2)	Averaging Time $\|E\|^2$, $\|H\|^2$ or S (minutes)
0.3-3.0	614	1.63	(100)*	6
3.0-30	1842/f	4.89/f	(900/f^2)*	6
30-300	61.4	0.163	1.0	6
300-1500	--	--	f/300	6
1500-100,000	--	--	5	6

(B) Limits for General Population/Uncontrolled Exposure

Frequency Range (MHz)	Electric Field Strength (E) (V/m)	Magnetic Field Strength (H) (A/m)	Power Density (S) (mW/cm^2)	Averaging Time $\|E\|^2$, $\|H\|^2$ or S (minutes)
0.3-1.34	614	1.63	(100)*	30
1.34-30	824/f	2.19/f	(180/f^2)*	30
30-300	27.5	0.073	0.2	30
300-1500	--	--	f/1500	30
1500-100,000	--	--	1.0	30

f = frequency in MHz *Plane-wave equivalent power density

Procedures: Prior to radiated testing, the radio was connected to a power meter in order to see if any channel was significantly stronger than the rest for each band. For the purposes of testing, the channel with the highest power from each band was used.

 © 2015, MET Laboratories, Inc.

B. Calculating MPE Distance from Antenna

Part 22, Low Channel, GSM

MPE Limit Calculation: EUT's operating frequencies @ 869.2 MHz; highest conducted power = 44.08 dBm therefore, **Limit for General Population/Uncontrolled Exposure: 0.57947 mW/cm^2**

EUT maximum antenna gain = 3 dBi.

Equation from page 18 of OET 65, Edition 97-01

$S = PG / 4\pi R^2$ or $R = \sqrt{PG / 4\pi S}$

where, S = Power Density (0.57947 mW/cm^2)
P = Power Input to antenna (25585.85 mW)
G = Antenna Gain (2 numeric)

$R = (25585.85*2/ 4\pi*0.57947)^{1/2} = 83.85$cm

MPE Limit Calculation: EUT's operating frequencies @ 869.2 MHz; highest conducted power = 44.08 dBm therefore, **Occupational/Controlled Exposure: 2.8973 mW/cm^2**

EUT maximum antenna gain = 3 dBi.

Equation from page 18 of OET 65, Edition 97-01

$S = PG / 4\pi R^2$ or $R = \sqrt{PG / 4\pi S}$

where, S = Power Density (2.8973 mW/cm^2)
P = Power Input to antenna (25585.85 mW)
G = Antenna Gain (2 numeric)

$R = (25585.85*2/ 4\pi*2.8973)^{1/2} = 37.499$ cm

 © 2015, MET Laboratories, Inc.

Part 22, Low Channel, CDMA

MPE Limit Calculation: EUT's operating frequencies @ 869.7 MHz; highest conducted power = 43.51 dBm therefore, **Limit for General Population/Uncontrolled Exposure: 0.5798 mW/cm^2**

EUT maximum antenna gain = 3 dBi.

Equation from page 18 of OET 65, Edition 97-01

$S = PG / 4\pi R^2$ or $R = \sqrt{PG / 4\pi S}$

where, S = Power Density (0.5798 mW/cm^2)
P = Power Input to antenna (22438.81 mW)
G = Antenna Gain (2 numeric)

$R = (22438.81*2/ 4\pi*0.5798)^{1/2} = 78.504$ cm

MPE Limit Calculation: EUT's operating frequencies @ 869.7 MHz; highest conducted power = 43.51 dBm therefore, **Occupational/Controlled Exposure: 2.899 mW/cm^2**

EUT maximum antenna gain = 3 dBi.

Equation from page 18 of OET 65, Edition 97-01

$S = PG / 4\pi R^2$ or $R = \sqrt{PG / 4\pi S}$

where, S = Power Density (2.899 mW/cm^2)
P = Power Input to antenna (22438.81 mW)
G = Antenna Gain (2 numeric)

$R = (22438.81*2/ 4\pi*2.899)^{1/2} = 35.109$ cm

 © 2015, MET Laboratories, Inc.

Part 22, Low Channel, WCDMA

MPE Limit Calculation: EUT's operating frequencies @ 871.4MHz; highest conducted power = 44.45 dBm therefore, **Limit for General Population/Uncontrolled Exposure: 0.5809 mW/cm^2**

EUT maximum antenna gain = 3 dBi.

Equation from page 18 of OET 65, Edition 97-01

$S = PG / 4\pi R^2$ or $R = \sqrt{PG / 4\pi S}$

where, S = Power Density (0.5809 mW/cm^2)
P = Power Input to antenna (28248.79 mW)
G = Antenna Gain (2 numeric)

$R = (28248.79*2/ 4\pi*0.5809)^{1/2} = 87.997$ cm

MPE Limit Calculation: EUT's operating frequencies @ 871.4 MHz; highest conducted power = 44.45 dBm therefore, **Occupational/Controlled Exposure: 2.905 mW/cm^2**

EUT maximum antenna gain = 3 dBi.

Equation from page 18 of OET 65, Edition 97-01

$S = PG / 4\pi R^2$ or $R = \sqrt{PG / 4\pi S}$

where, S = Power Density (2.905 mW/cm^2)
P = Power Input to antenna (28248.79 mW)
G = Antenna Gain (2 numeric)

$R = (28248.79*2/ 4\pi*2.905)^{1/2} = 39.353$ cm

© 2015, MET Laboratories, Inc.

Part 24, High Channel, GSM

MPE Limit Calculation: EUT's operating frequencies @ 1990 MHz; highest conducted power = 44.58 dBm therefore, **Limit for General Population/Uncontrolled Exposure: 1.0 mW/cm^2**

EUT maximum antenna gain = 4 dBi.

Equation from page 18 of OET 65, Edition 97-01

$S = PG / 4\pi R^2$ or $R = \sqrt{PG / 4\pi S}$

where, S = Power Density (1.0 mW/cm^2)
P = Power Input to antenna (28707.81 mW)
G = Antenna Gain (2.51 numeric)

$R = (28707.81*2.51/ 4\pi*1.0)^{1/2} = 75.74$ cm

MPE Limit Calculation: EUT's operating frequencies @ 1990 MHz; highest conducted power = 44.58 dBm therefore, **Occupational/Controlled Exposure: 5.0 mW/cm^2**

EUT maximum antenna gain = 4 dBi.

Equation from page 18 of OET 65, Edition 97-01

$S = PG / 4\pi R^2$ or $R = \sqrt{PG / 4\pi S}$

where, S = Power Density (5.0 mW/cm^2)
P = Power Input to antenna (28707.81 mW)
G = Antenna Gain (2.51 numeric)

$R = (28707.81*2.51/ 4\pi*5)^{1/2} = 33.87$ cm

© 2015, MET Laboratories, Inc.

Part 24, Mid Channel, CDMA

MPE Limit Calculation: EUT's operating frequencies @ 1960 MHz; highest conducted power = 43.58 dBm therefore, **Limit for General Population/Uncontrolled Exposure: 1.0 mW/cm^2**

EUT maximum antenna gain = 4 dBi.

Equation from page 18 of OET 65, Edition 97-01

$S = PG / 4\pi R^2$ or $R = \sqrt{PG / 4\pi S}$

where, S = Power Density (1.0 mW/cm^2)
P = Power Input to antenna (22803.42 mW)
G = Antenna Gain (2.51 numeric)

$R = (22803.42*2.51/ 4\pi*1.0)^{1/2} = 66.506$ cm

MPE Limit Calculation: EUT's operating frequencies @ 1960 MHz; highest conducted power = 43.58 dBm therefore, **Occupational/Controlled Exposure: 5.0 mW/cm^2**

EUT maximum antenna gain = 4 dBi.

Equation from page 18 of OET 65, Edition 97-01

$S = PG / 4\pi R^2$ or $R = \sqrt{PG / 4\pi S}$

where, S = Power Density (5.0 mW/cm^2)
P = Power Input to antenna (22803.42 mW)
G = Antenna Gain (2.51 numeric)

$R = (22803.42*2.51/ 4\pi*5.0)^{1/2} = 30.189$ cm

© 2015, MET Laboratories, Inc.

Part 24, High Channel, WCDMA

MPE Limit Calculation: EUT's operating frequencies @ 1988 MHz; highest conducted power = 43.57 dBm therefore, **Limit for General Population/Uncontrolled Exposure: 1.0 mW/cm^2**

EUT maximum antenna gain = 4 dBi.

Equation from page 18 of OET 65, Edition 97-01

$S = PG / 4\pi R^2$ or $R = \sqrt{PG / 4\pi S}$

where, S = Power Density (1.0 mW/cm^2)
P = Power Input to antenna (22750.97 mW)
G = Antenna Gain (2.51 numeric)

$R = (22750.97*2.51/ 4\pi*1.0)^{1/2} = 75.74$ cm

MPE Limit Calculation: EUT's operating frequencies @ 1988 MHz; highest conducted power = 43.57 dBm therefore, **Occupational/Controlled Exposure: 5.0 mW/cm^2**

EUT maximum antenna gain = 4 dBi.

Equation from page 18 of OET 65, Edition 97-01

$S = PG / 4\pi R^2$ or $R = \sqrt{PG / 4\pi S}$

where, S = Power Density (5.0 mW/cm^2)
P = Power Input to antenna (22750.97 mW)
G = Antenna Gain (2.51 numeric)

$R = (22750.97*2.51/ 4\pi*5.0)^{1/2} = 33.87$ cm

© 2015, MET Laboratories, Inc.

Part 27, High Channel, CDMA

MPE Limit Calculation: EUT's operating frequencies @ 2154 MHz; highest conducted power = 43.18 dBm therefore, **Limit for General Population/Uncontrolled Exposure: 1.0 mW/cm^2**

EUT maximum antenna gain = 4 dBi.

Equation from page 18 of OET 65, Edition 97-01

$S = PG / 4\pi R^2$ or $R = \sqrt{PG / 4\pi S}$

where, S = Power Density (1.0 mW/cm^2)
P = Power Input to antenna (20796.97 mW)
G = Antenna Gain (2.51 numeric)

$R = (20796.97 * 2.51 / 4\pi * 1.0)^{1/2} = 64.467$ cm

MPE Limit Calculation: EUT's operating frequencies @ 2154 MHz; highest conducted power = 43.18 dBm therefore, **Occupational/Controlled Exposure: 5.0 mW/cm^2**

EUT maximum antenna gain = 4 dBi.

Equation from page 18 of OET 65, Edition 97-01

$S = PG / 4\pi R^2$ or $R = \sqrt{PG / 4\pi S}$

where, S = Power Density (5.0 mW/cm^2)
P = Power Input to antenna (20796.97 mW)
G = Antenna Gain (2.51 numeric)

$R = (20796.97 * 2.51 / 4\pi * 5.0)^{1/2} = 29.57$ cm

Part 27, Mid Channel, WCDMA

MPE Limit Calculation: EUT's operating frequencies @ 2153 MHz; highest conducted power = 43.40 dBm therefore, **Limit for General Population/Uncontrolled Exposure: 1.0 mW/cm^2**

EUT maximum antenna gain = 4 dBi.

Equation from page 18 of OET 65, Edition 97-01

$S = PG / 4\pi R^2$ or $R = \sqrt{PG / 4\pi S}$

where, S = Power Density (1.0 mW/cm^2)
P = Power Input to antenna (21877.62 mW)
G = Antenna Gain (2.51 numeric)

$R = (21877.62*2.51/ 4\pi*1.0)^{1/2} = 66.121$ cm

MPE Limit Calculation: EUT's operating frequencies @ 2153 MHz; highest conducted power = 43.40 dBm therefore, **Occupational/Controlled Exposure: 5.0 mW/cm^2**

EUT maximum antenna gain = 4 dBi.

Equation from page 18 of OET 65, Edition 97-01

$S = PG / 4\pi R^2$ or $R = \sqrt{PG / 4\pi S}$

where, S = Power Density (5.0 mW/cm^2)
P = Power Input to antenna (21877.62 mW)
G = Antenna Gain (2.51 numeric)

$R = (21877.62*2.51/ 4\pi*5.0)^{1/2} = 29.57$ cm

Test Procedures:

1. The test setup was as described in the EUT Configuration section of this test report. The base station and amplifier were on the outside of the chamber while the antenna was on the inside.
2. The antenna under test was mounted to a 30x30cm ground plane and placed on an 80cm test table.
3. The EUT was set to transmit continuously at the selected frequency and modulation at maximum RF power. The distance between the field intensity probe and the EUT's antenna was equal to the calculated distance R applicable either for controlled or uncontrolled environments.
4. Field intensity measurements were taken at different heights of the probe from the ground (0.1 to 2 meters) in 10cm increments, while rotating versus azimuth (from 0° to 360°).
5. Each maximized peak field intensity measurement was recorded.
6. Average values of power density were calculated for the imaginary whole human body (0.1–2.0 m), for the lower part of the body (0.1–0.9 m) and for the upper part of the body (1.0–2.0 m). The results of calculations are shown in the following tables.

Test Results: The EUT was compliant with this requirement.

Test Engineer: Benjamin Taylor

Test Date: 08/06/15

© 2015, MET Laboratories, Inc.

Part 22, Low Channel, GSM

Low Channel 869.2 MHz GSM Modulation					Low Channel 869.2 MHz GSM Modulation			
Population/Uncontrolled Exposure 83.85 cm					Occupational/Controlled Exposure 37.499 cm			
	Raw	Corrected V/m	PD mW/cm2			Raw	Corrected V/m	PD mW/cm2
10	8.92	8.92	0.0211051		10	9.08	9.08	0.0218691
20	11.11	11.11	0.0327406		20	9.55	9.55	0.0241916
30	13.26	13.26	0.0466386		30	8.79	8.79	0.0204945
40	13.71	13.71	0.0498579		40	11.92	11.92	0.0376887
50	15.92	15.92	0.0672272		50	20.55	20.55	0.1120166
60	18.91	18.91	0.094851		60	26.29	26.29	0.1833327
70	19.56	19.56	0.1014837		70	54.97	54.97	0.8015122
80	25.25	25.25	0.1691147		80	79.41	79.41	1.6726653
90	29.87	29.87	0.2366623		90	90.49	90.49	2.172
100	31.07	31.07	0.2560597		100	88.49	88.49	2.0770504
110	32.95	32.95	0.2879847		110	80.18	80.18	1.7052606
120	35.44	35.44	0.3331548		120	56.86	56.86	0.8575755
130	37.55	37.55	0.374006		130	42.55	42.55	0.4802394
140	35.59	35.59	0.3359809		140	29.78	29.78	0.2352383
150	31.76	31.76	0.267559		150	22.97	22.97	0.1399525
160	25.61	25.61	0.1739714		160	18.37	18.37	0.0895111
170	20.87	20.87	0.1155323		170	14.65	14.65	0.056929
180	18.48	18.48	0.0905863		180	13.45	13.45	0.0479847
190	17.32	17.32	0.0795709		190	12.13	12.13	0.0390284
200	18.46	18.46	0.0903903		200	11.23	11.23	0.0334517

Population/Uncontrolled Exposure 83.85 cm	3 dBi MLPVDB800/1900S
Part of the Body/Averaging Points	Averaged Power Density
Whole Body (0.1 m to 2.0 m)	0.161
Lower Body (0.1 m to 0.9 m)	0.091
Upper Body (1.0 m to 2.0 m)	0.219
Occupational/Controlled Exposure 37.499 cm	3 dBi MLPVDB800/1900S
Part of the Body/Averaging Points	Averaged Power Density
Whole Body (0.1 m to 2.0 m)	0.540
Lower Body (0.1 m to 0.9 m)	0.561
Upper Body (1.0 m to 2.0 m)	0.524

© 2015, MET Laboratories, Inc.

Part 22, Low Channel, CDMA

Low Channel 869.7 MHz CDMA Modulation					Low Channel 869.7 MHz CDMA Modulation			
Population/Uncontrolled Exposure 78.504 cm					Occupational/Controlled Exposure 35.109 cm			
	Raw	Corrected V/m	PD mW/cm2			Raw	Corrected V/m	PD mW/cm2
10	9.02	8.98392	0.0214087		10	8.21	8.17716	0.0177363
20	12.3	12.2508	0.0398096		20	6.65	6.6234	0.0116365
30	12.45	12.4002	0.0407865		30	8.75	8.715	0.0201462
40	14.33	14.27268	0.0540343		40	11.54	11.49384	0.035042
50	16.6	16.5336	0.0725093		50	17.07	17.00172	0.0766733
60	13.56	13.50576	0.0483834		60	24.24	24.14304	0.1546118
70	19.27	19.19292	0.0977104		70	32.62	32.48952	0.2799918
80	22.37	22.28052	0.1316768		80	61.79	61.54284	1.0046475
90	25.6	25.4976	0.1724476		90	93.77	93.39492	2.3136899
100	28.75	28.635	0.2174969		100	97.48	97.09008	2.5003935
110	34.18	34.04328	0.3074124		110	79.64	79.32144	1.6689366
120	38.72	38.56512	0.3945009		120	58.91	58.67436	0.9131779
130	36.47	36.32412	0.3499845		130	37.42	37.27032	0.3684554
140	35.4	35.2584	0.3297493		140	27.2	27.0912	0.1946772
150	31.81	31.68276	0.2662592		150	20.27	20.18892	0.1081147
160	26.08	25.97568	0.1789751		160	17.16	17.09136	0.077484
170	21.41	21.32436	0.1206176		170	15.81	15.74676	0.065772
180	15.2	15.1392	0.0607945		180	12.07	12.02172	0.0383347
190	15.62	15.55752	0.0642006		190	12.01	11.96196	0.0379545
200	15.66	15.59736	0.0645299		200	9.54	9.50184	0.0239483

Population/Uncontrolled Exposure 78.504 cm	3 dBi MLPVDB800/1900S
Part of the Body/Averaging Points	Averaged Power Density
Whole Body (0.1 m to 2.0 m)	0.152
Lower Body (0.1 m to 0.9 m)	0.075
Upper Body (1.0 m to 2.0 m)	0.214
Occupational/Controlled Exposure 35.109 cm	3 dBi MLPVDB800/1900S
Part of the Body/Averaging Points	Averaged Power Density
Whole Body (0.1 m to 2.0 m)	0.496
Lower Body (0.1 m to 0.9 m)	0.435
Upper Body (1.0 m to 2.0 m)	0.545

© 2015, MET Laboratories, Inc.

Part 22, Low Channel, WCDMA

Low Channel 871.4 MHz WCDMA Modulation					Low Channel 871.4 MHz WCDMA Modulation			
Population/Uncontrolled Exposure 87.997 cm					Occupational/Controlled Exposure 39.353 cm			
	Raw	Corrected V/m	PD mW/cm2			Raw	Corrected V/m	PD mW/cm2
10	10.1	10.1404	0.027275255		10	7.97	8.00188	0.016984107
20	10.57	10.61228	0.029872808		20	7.32	7.34928	0.014326768
30	11.25	11.295	0.03384006		30	10.54	10.58216	0.029703478
40	12.1	12.1484	0.039146849		40	13.92	13.97568	0.051808921
50	14.56	14.61824	0.056682478		50	20.63	20.71252	0.113795354
60	16.42	16.48568	0.072089561		60	25.99	26.09396	0.180608687
70	18.28	18.35312	0.089346688		70	34.36	34.49744	0.315669328
80	21.71	21.79684	0.126021813		80	61.24	61.48496	1.002758702
90	25.05	25.1502	0.16778052		90	91.42	91.78568	2.234644842
100	29.34	29.45736	0.230168716		100	100.94	101.34376	2.72428586
110	37.62	37.77048	0.378410918		110	84.47	84.80788	1.907792178
120	38.62	38.77448	0.398795835		120	61.29	61.53516	1.004396795
130	35.35	35.4914	0.334121876		130	42.21	42.37884	0.476383576
140	34.35	34.4874	0.315485612		140	26.47	26.57588	0.187341485
150	33.2	33.3328	0.294715002		150	21.79	21.87716	0.126952289
160	26.62	26.72648	0.189470752		160	17.28	17.34912	0.079838717
170	22.13	22.21852	0.130944995		170	16.45	16.5158	0.072353223
180	18.61	18.68444	0.092601671		180	13.06	13.11224	0.045604997
190	20.31	20.39124	0.110292485		190	13.45	13.5038	0.048369394
200	16.65	16.7166	0.074123267		200	12.21	12.25884	0.039861846

Population/Uncontrolled Exposure 87.997 cm	3 dBi MLPVDB800/1900S
Part of the Body/Averaging Points	Averaged Power Density
Whole Body (0.1 m to 2.0 m)	0.160
Lower Body (0.1 m to 0.9 m)	0.071
Upper Body (1.0 m to 2.0 m)	0.232
Occupational/Controlled Exposure 39.353 cm	3 dBi MLPVDB800/1900S
Part of the Body/Averaging Points	Averaged Power Density
Whole Body (0.1 m to 2.0 m)	0.534
Lower Body (0.1 m to 0.9 m)	0.440
Upper Body (1.0 m to 2.0 m)	0.610

© 2015, MET Laboratories, Inc.

Part 24, High Channel, GSM

High Channel 1990 MHz GSM Modulation					High Channel 1990 MHz GSM Modulation			
Population/Uncontrolled Exposure 75.74 cm					Occupational/Controlled Exposure 33.87 cm			
	Raw	Corrected V/m	PD mW/cm2			Raw	Corrected V/m	PD mW/cm2
10	10.41	11.90904	0.037619425		10	8.45	9.6668	0.024787009
20	13.01	14.88344	0.058757768		20	9.33	10.67352	0.030218575
30	13.75	15.73	0.065632069		30	10.91	12.48104	0.041319989
40	13.31	15.22664	0.061498824		40	14.94	17.09136	0.077483975
50	16.05	18.3612	0.089425375		50	20.96	23.97824	0.152508221
60	16.63	19.02472	0.096005297		60	27.24	31.16256	0.257587572
70	20.47	23.41768	0.145460938		70	38.87	44.46728	0.524493101
80	23.47	26.84968	0.191221569		80	67.05	76.7052	1.560659869
90	28.1	32.1464	0.274109027		90	105.52	120.71488	3.865273807
100	32.76	37.47744	0.372561939		100	111.32	127.35008	4.301868137
110	36.54	41.80176	0.463497915		110	84.31	96.45064	2.467566567
120	38.27	43.78088	0.50842585		120	57.13	65.35672	1.133024098
130	43.01	49.20344	0.642169365		130	43.58	49.85552	0.65930315
140	37.27	42.63688	0.482202529		140	26.57	30.39608	0.245072063
150	32.76	37.47744	0.372561939		150	22.29	25.49976	0.172476859
160	30.83	35.26952	0.329957305		160	17.71	20.26024	0.108879927
170	22.91	26.20904	0.182205246		170	18.08	20.68352	0.113476923
180	18.81	21.51864	0.122825429		180	14.48	16.56512	0.072785995
190	17.21	19.68824	0.102818778		190	13.68	15.64992	0.064965516
200	17.67	20.21448	0.108388648		200	14.49	16.57656	0.072886563

Population/Uncontrolled Exposure 75.74 cm	4 dBi MLPVDB800/1900S
Part of the Body/Averaging Points	Averaged Power Density
Whole Body (0.1 m to 2.0 m)	0.235
Lower Body (0.1 m to 0.9 m)	0.113
Upper Body (1.0 m to 2.0 m)	0.335
Occupational/Controlled Exposure 33.87 cm	4 dBi MLPVDB800/1900S
Part of the Body/Averaging Points	Averaged Power Density
Whole Body (0.1 m to 2.0 m)	0.797
Lower Body (0.1 m to 0.9 m)	0.726
Upper Body (1.0 m to 2.0 m)	0.856

© 2015, MET Laboratories, Inc.

Part 24, Mid Channel, CDMA

Mid Channel 1960 MHz CDMA Modulation					Mid Channel 1960 MHz CDMA Modulation			
Population/Uncontrolled Exposure 67.506 cm					Occupational/Controlled Exposure 30.189 cm			
	Raw	Corrected V/m	PD mW/cm2			Raw	Corrected V/m	PD mW/cm2
10	9.69	11.08536	0.032595545		10	6.26	7.16144	0.013603773
20	10.8	12.3552	0.040490973		20	8.1	9.2664	0.022776172
30	15.42	17.64048	0.082542847		30	8.62	9.86128	0.025794388
40	13.34	15.26096	0.061776366		40	10.28	11.76032	0.03668571
50	14.41	16.48504	0.072083964		50	16.54	18.92176	0.094968966
60	19.42	22.21648	0.130920951		60	28.85	33.0044	0.288936451
70	22.35	25.5684	0.173406652		70	40.02	45.78288	0.555987295
80	29.9	34.2056	0.310350947		80	84.04	96.14176	2.451787272
90	34.91	39.93704	0.423068213		90	137.82	157.66608	6.593791189
100	42.31	48.40264	0.621436488		100	121.33	138.80152	5.110308211
110	48.54	55.52976	0.817918898		110	77.51	88.67144	2.08557673
120	45.34	51.86896	0.713631038		120	50.04	57.24576	0.869251204
130	39.73	45.45112	0.547958703		130	34.87	39.89128	0.422099263
140	35.97	41.14968	0.449150176		140	24.5	28.028	0.208373683
150	28.72	32.85568	0.286338384		150	18.26	20.88944	0.115747667
160	23.07	26.39208	0.184759121		160	15.19	17.37736	0.080098844
170	20.39	23.32616	0.144326191		170	14.85	16.9884	0.076553245
180	15	17.16	0.078107586		180	13.95	15.9588	0.067555251
190	14.25	16.302	0.070492097		190	10.58	12.10352	0.038858142
200	11.56	13.22464	0.046390213		200	10.62	12.14928	0.039152521

Population/Uncontrolled Exposure 67.506 cm	4 dBi MLPVDB800/1900S
Part of the Body/Averaging Points	Averaged Power Density
Whole Body (0.1 m to 2.0 m)	0.264
Lower Body (0.1 m to 0.9 m)	0.147
Upper Body (1.0 m to 2.0 m)	0.360
Occupational/Controlled Exposure 30.189 cm	4 dBi MLPVDB800/1900S
Part of the Body/Averaging Points	Averaged Power Density
Whole Body (0.1 m to 2.0 m)	0.960
Lower Body (0.1 m to 0.9 m)	1.120
Upper Body (1.0 m to 2.0 m)	0.829

© 2015, MET Laboratories, Inc.

Part 24, High Channel, WCDMA

High Channel 1988 MHz WCDMA Modulation					High Channel 1988 MHz WCDMA Modulation			
Population/Uncontrolled Exposure 67.428 cm					Occupational/Controlled Exposure 30.155 cm			
	Raw	Corrected V/m	PD mW/cm2			Raw	Corrected V/m	PD mW/cm2
10	9.34	10.59156	0.029756271		10	5.63	6.38442	0.010811888
20	11.42	12.95028	0.044485345		20	6.66	7.55244	0.015129801
30	14.47	16.40898	0.071420325		30	8.61	9.76374	0.025286636
40	13.3	15.0822	0.060337601		40	10.58	11.99772	0.038181773
50	14.2	16.1028	0.068779885		50	15.65	17.7471	0.083543649
60	18.74	21.25116	0.119790929		60	28.05	31.8087	0.268380211
70	23.19	26.29746	0.183436712		70	43.21	49.00014	0.636873666
80	26.47	30.01698	0.238997106		80	101.23	114.79482	3.495451114
90	34.44	39.05496	0.404586181		90	153.87	174.48858	8.075932241
100	42.33	48.00222	0.611197115		100	129.54	146.89836	5.723906677
110	48.09	54.53406	0.788849788		110	82.46	93.50964	2.319377393
120	47.65	54.0351	0.774480645		120	48.74	55.27116	0.810318602
130	38.62	43.79508	0.508755711		130	35.77	40.56318	0.436438083
140	40.33	45.73422	0.554806069		140	25.59	29.01906	0.22337025
150	33.73	38.24982	0.388076586		150	19.26	21.84084	0.126531112
160	24.73	28.04382	0.208608976		160	15.12	17.14608	0.077980918
170	21.61	24.50574	0.15929212		170	14.46	16.39764	0.071321644
180	19.04	21.59136	0.123656983		180	13.86	15.71724	0.065525632
190	14.93	16.93062	0.076033394		190	11.15	12.6441	0.042406702
200	12.86	14.58324	0.056411376		200	11.37	12.89358	0.044096659

Population/Uncontrolled Exposure 67.428 cm	4 dBi MLPVDB800/1900S
Part of the Body/Averaging Points	Averaged Power Density
Whole Body (0.1 m to 2.0 m)	0.274
Lower Body (0.1 m to 0.9 m)	0.136
Upper Body (1.0 m to 2.0 m)	0.386
Occupational/Controlled Exposure 30.155 cm	4 dBi MLPVDB800/1900S
Part of the Body/Averaging Points	Averaged Power Density
Whole Body (0.1 m to 2.0 m)	1.130
Lower Body (0.1 m to 0.9 m)	1.406
Upper Body (1.0 m to 2.0 m)	0.904

© 2015, MET Laboratories, Inc.

Part 27, High Channel, CDMA

High Channel 2154 MHz CDMA Modulation					High Channel 2154 MHz CDMA Modulation			
Population/Uncontrolled Exposure 64.4 cm					Occupational/Controlled Exposure 28.8 cm			
	Raw	Corrected V/m	PD mW/cm2			Raw	Corrected V/m	PD mW/cm2
10	8.61	9.76374	0.025286636		10	6.87	7.79058	0.016098975
20	11.67	13.23378	0.046454359		20	7.36	8.34624	0.01847738
30	12.44	14.10696	0.052786822		30	12.72	14.42448	0.05518982
40	16.08	18.23472	0.088197616		40	13.21	14.98014	0.059523765
50	18.39	20.85426	0.115358133		50	15.95	18.0873	0.0867773
60	20.31	23.03154	0.140703404		60	27.41	31.08294	0.256272986
70	25.06	28.41804	0.214213527		70	40.08	45.45072	0.547949058
80	31.27	35.46018	0.333534314		80	84.01	95.26734	2.407391531
90	36.51	41.40234	0.454682694		90	134.54	152.56836	6.174298269
100	42.34	48.01356	0.611485927		100	110.59	125.40906	4.171732714
110	44.4	50.3496	0.672435602		110	74.11	84.04074	1.873433947
120	42.78	48.51252	0.624261166		120	51.55	58.4577	0.906446337
130	38.59	43.76106	0.507965616		130	37.68	42.72912	0.484291166
140	37.55	42.5817	0.480955219		140	26.91	30.51594	0.247008646
150	30	34.02	0.306992149		150	18.35	20.8089	0.114856849
160	24.93	28.27062	0.211996805		160	16.81	19.06254	0.096387382
170	20.56	23.31504	0.144188618		170	13.62	15.44508	0.063275994
180	17.2	19.5048	0.10091173		180	13.22	14.99148	0.059613918
190	14.61	16.56774	0.072809021		190	11.03	12.50802	0.041498823
200	11.91	13.50594	0.048384726		200	9.11	10.33074	0.028308803

Population/Uncontrolled Exposure 64.4 cm	4 dBi MLPVDB800/1900S
Part of the Body/Averaging Points	Averaged Power Density
Whole Body (0.1 m to 2.0 m)	0.263
Lower Body (0.1 m to 0.9 m)	0.163
Upper Body (1.0 m to 2.0 m)	0.344
Occupational/Controlled Exposure 28.8 cm	4 dBi MLPVDB800/1900S
Part of the Body/Averaging Points	Averaged Power Density
Whole Body (0.1 m to 2.0 m)	0.885
Lower Body (0.1 m to 0.9 m)	1.069
Upper Body (1.0 m to 2.0 m)	0.735

© 2015, MET Laboratories, Inc.

Part 27, Mid Channel, WCDMA

Mid Channel 2153 MHz WCDMA Modulation					Mid Channel 2153 MHz WCDMA Modulation			
Population/Uncontrolled Exposure 66.121 cm					Occupational/Controlled Exposure 29.57 cm			
	Raw	Corrected V/m	PD mW/cm2			Raw	Corrected V/m	PD mW/cm2
10	8.2	9.2168	0.022532998		10	0.92	1.03408	0.00028364
20	10	11.34	0.034110239		20	8.57	9.63268	0.024612341
30	11.24	12.74616	0.043094057		30	11.26	12.65624	0.042488173
40	17.39	19.72026	0.103153489		40	12.76	14.34224	0.054562294
50	15.23	17.27082	0.079119688		50	18.24	20.50176	0.11149129
60	15.77	17.88318	0.084829742		60	28.06	31.53944	0.263855776
70	21.77	24.68718	0.161659644		70	36.74	41.29576	0.452344773
80	27.43	31.10562	0.256647108		80	93.86	105.49864	2.952244839
90	33.99	38.54466	0.394082444		90	147.51	165.80124	7.291790765
100	39.04	44.27136	0.519881516		100	113.26	127.30424	4.298771756
110	39.66	44.97444	0.536525266		110	78.54	88.27896	2.067155114
120	38.77	43.96518	0.512715399		120	51.28	57.63872	0.881226006
130	40.97	46.45998	0.572554308		130	39.26	44.12824	0.516525614
140	35.43	40.17762	0.428180676		140	27.05	30.4042	0.245203018
150	31.87	36.14058	0.346456637		150	19.24	21.62576	0.124051325
160	24.72	28.03248	0.208440301		160	14.83	16.66892	0.073701033
170	21.88	24.81192	0.163297447		170	13.81	15.52244	0.063911444
180	17.61	19.96974	0.105779978		180	12.91	14.51084	0.055852647
190	16.42	18.62028	0.091966798		190	10.96	12.31904	0.040254309
200	12.72	14.42448	0.05518982		200	10.25	11.521	0.035207809

Population/Uncontrolled Exposure 66.121 cm	4 dBi MLPVDB800/1900S
Part of the Body/Averaging Points	Averaged Power Density
Whole Body (0.1 m to 2.0 m)	0.236
Lower Body (0.1 m to 0.9 m)	0.131
Upper Body (1.0 m to 2.0 m)	0.322
Occupational/Controlled Exposure 29.57 cm	4 dBi MLPVDB800/1900S
Part of the Body/Averaging Points	Averaged Power Density
Whole Body (0.1 m to 2.0 m)	0.980
Lower Body (0.1 m to 0.9 m)	1.244
Upper Body (1.0 m to 2.0 m)	0.764

© 2015, MET Laboratories, Inc.

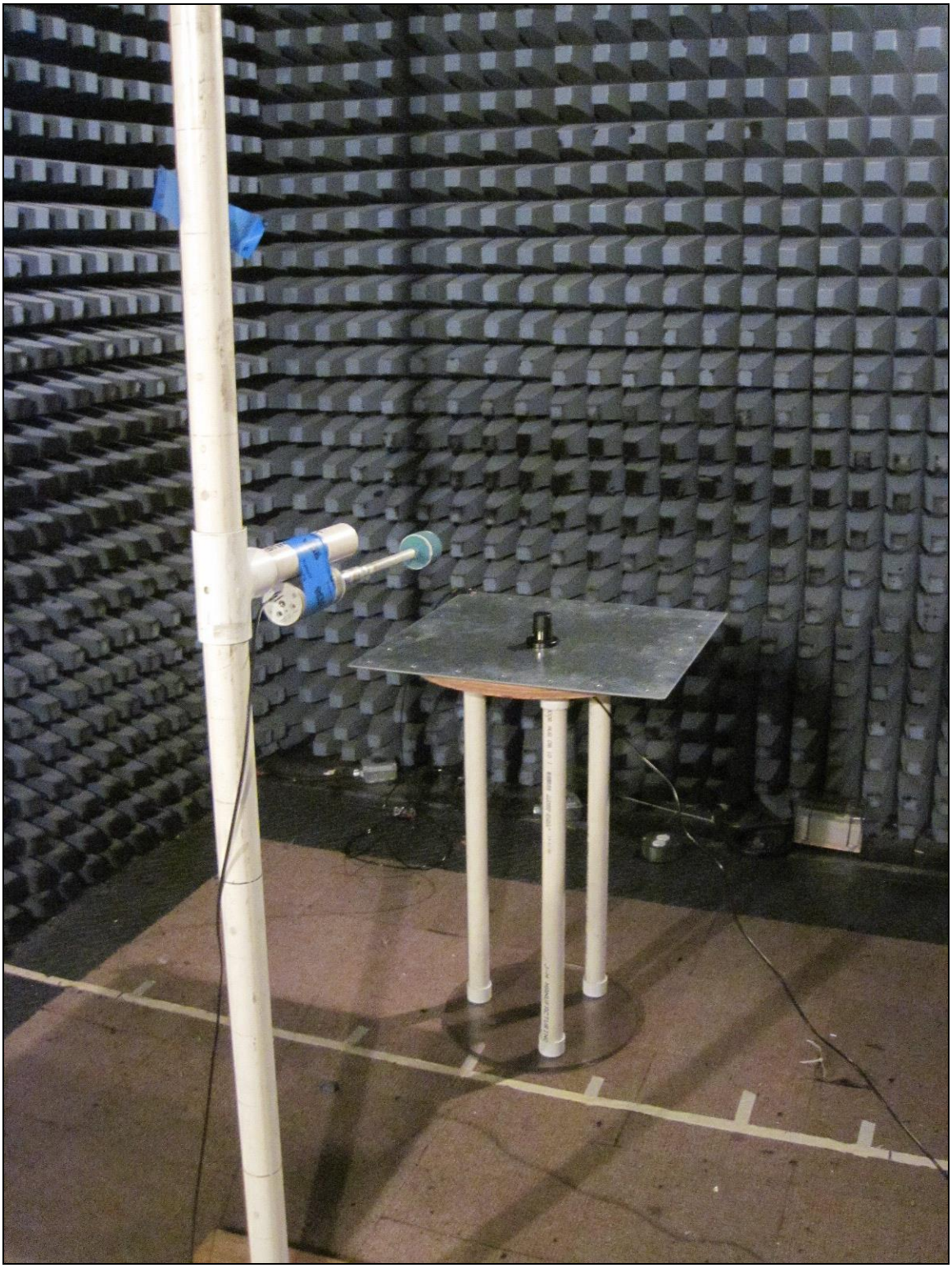

Photograph 1. Test Setup

© 2015, MET Laboratories, Inc.

IV. Test Equipment

© 2015, MET Laboratories, Inc.

Test Equipment

Calibrated test equipment utilized during testing was maintained in a current state of calibration per the requirements of ISO/IEC 17025:2005.

MET Asset #	Equipment	Manufacturer	Model	Last Cal Date	Cal Due Date
1T4148	SHIELD ROOM #2 SEMI-ANECHOIC	RANTEC	20	SEE NOTE	
1T4768	FIELD PROBE	NARDA	EP183 / OR03	10/23/2014	10/23/2015

Table 4. Test Equipment List

Note: Functionally tested equipment is verified using calibrated instrumentation at the time of testing.

 © 2015, MET Laboratories, Inc.

End of Report

 © 2015, MET Laboratories, Inc.