DIGILAND

DL1010Q

USER'S MANUAL

Thanks For Purchasing Your Tablet

This user manual has been specially designed to guide you through the functions and features of your device.

1) Please read this manual carefully before using your device to ensure safe and correct use.
2) The descriptions in this manual are based on the default settings of your device.
3) Do not use this unit near water. Do not place over the unit any container with liquid inside.
4) Please do not put your device in high temperature, moisture or dust place; the tablet is not waterproof.
5) Avoid falling or violent collision, do not violently shake the touch screen, otherwise, it could lead to damage or display unnormal.
6) If system shutdown automatically, bootable again soon after the shutdown.
7) Please charge the tablet regularly if not use it for long time to avoid the damage caused by the excessive consumption from battery.
8) Do not disassemble or use alcohol, thinner or benzene class to swab product surface.
9) Please do not use the tablet when driving or walking in the street, otherwise it may lead an accident.
10) Please choose the appropriate volume, if had tinnitus, please lower the volume or stop using.
11) Memory space available dishonest nominal for the android system itself takes up part of the memory space and the operation of the program will also take up space if you open them.
12) Storage capacity that dishonest nominal for android system occupies about hundreds of MB storage capacity, also in order to install the software needs, the system must lay off certain storage capacity, so the actual usable space and nominal space have deviation.
13) When CPU in high-speed operation, especially in 3D games or in long time playback high-definition video, the fuselage will have the phenomenon of fever.
14) Please keep this manual for future reference.

Catalog

	Chapter One(overview)	
1.1	Appearance	1
1.2	Buttons	2
1.3	Open and shut down	2
1.4	Open and close standby mode	2
1.5	Lock and unlock the screen	2
1.6	Homepage information column	3
1.7	Text input	3
1.8	Reset	4
1.9	USB Connect	4
1.10	Accessories	4
	Chapter Two (Internet)	
2.1	Browser	5
	Chapter Three (Applications)	
3.1	Explorer	5
3.2	Downloads	6
	Chapter Four (System setting)	
4.1	Wireless networks setting	6
4.2	Sound setting	6
4.3	Display setting	7
4.4	Application setting	7
4.5	Date & Time setting	8
4.6	Language and input setting	8
	Chapter Five (Specification)	9
	Chapter Six (Attentions)	10

Chapter One：Overview

1.1 Appearance

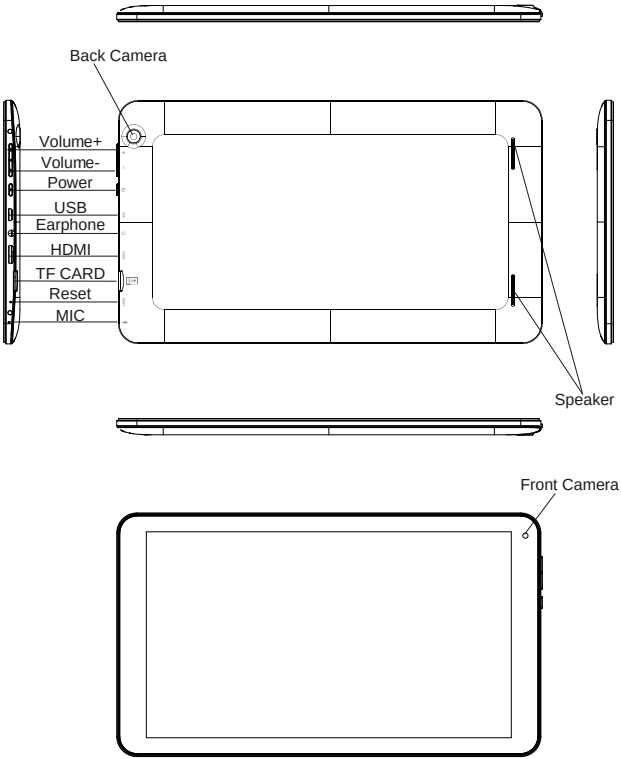

1.2 Buttons

Power button

Long press the power button 2-3 seconds to open the screen
When open the tablet, short press this button to enter the off-screen state and short press again to light up the screen.
Note:
If the tablet is hanging, please use a small hardware to reset at the bottom upper right corner.

Volume

Press Volume+/- to adjust the volume.

1.3 Open and shut down

Open

Long press the power button (see the appearance) 2-3 seconds, pictures will show up until to the interface.

Shut down

Long press the power button, then the screen shows do you want shut down, press OK to shut down in charging state, when the tablet is off, press the power button, it will shows charging feature, once again to click power button, the tablet will be opened.

1.4 Open and close standby mode

Open the standby mode

In boot mode, you can tap the power button, the system will into the standby mode which can save power.

Close the standby mode

In the standby mode, light tap of the power button of the device, enter the normal state.

1.5 Lock and unlock the screen

Lock

You can set the sleep time in the system of **display.**
The system will sleep automatically and lock the screen to the standby mode if without any inactivity when reaches the preset of standby time.

Unlock

Move the sign to unlock.
Drag this to unlock the screen and enter the application interface.

1.6 Homepage Information Column

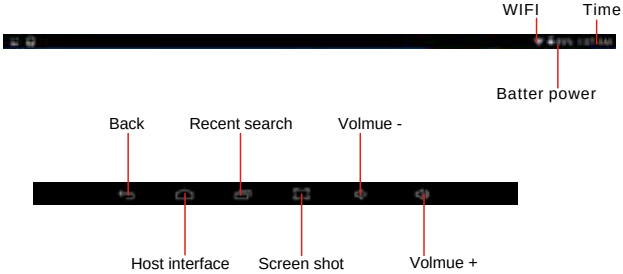

1.7 Text Input

When use the tablet, you can use the virtual keyboard to enter text, number, symbols directly by touching screen. After selecting the Android input method, the default keyboard show as below:

To switch the numbers and letters, please press this ?123

To switch the capital and lowercase letter, please press ⇧

1.8 Reset

Press the reset button at the bottom upper right corner of the device, then you device will reset and power off.Press the power 2~3 seconds to restart.

1.9 USB connect

Please connect PC with in-box USB cable for your tablet and you will see on your tablet, click this sign and **turn on USB storage** to connect your device.

Turn off USB storage to disconnect your device with PC.

1.10 Accessories

Power Adapter	1
USB Cable	1
User manual	1
Warranty card	1

Chapter two: Internet

2.1 Browser

Require network support before using a web browser, if there are network supporting problems, please contact your network operator or the service provider.
Tablet's web browser can connect to the Internet.
via WIFI to satisfy your business and individual network needs .
Please touch (Setting) to set up the WIFI so that can use the browser normally.

Touch here (Browser) in the application list to enter the browser pages; the default homepage is the **Recently Viewed** showing recently viewed pages.

Browser supports the following features.

Enter the URL-touch the input area to get the soft keyboard, then text the UPL.
Bookmark searchclick this to add into the bookmark
Touch this to read the favorite website that collected
Touch this to search the internet
Touch this to add new browser
Touch this to close the browser

Chapter three: Application

3.1 Explorer

Touch here (File manager) in the application list, it supports the files mutual copy in this two places SD Card, internal memory and USB.

3.2 Downloads

Click here in the application list; you can preview the downloading or done document contents.
Click download file to stop or delete the download contents

Chapter Four: System setting

Click here (Setting) to enter the system setting interface.

4.1 Wireless networks setting

This setting module includes: the wireless and network Settings
The wireless local area network Settings
Open wireless LAN switches, the system will scan available wireless network automatically and display the wireless local area network in the list
Among them, if the local area networks have the sign behind it, it represents the network has been encryption, it needs to enter the password to connection.
The sign represents the networks do not need a passwordm can be connected directly
You can choose the network from the list you want m click it to connect directly, also you can click the advanced, then click connected to network; you can also select add wireless local area network to add by hand
Network notice: open the switch, it will notice if there any opne networks
The wireless local area network certificate: the wireless local area network loading and management

4.2 Sound setting

In Sound setting, you can choose mute switch which can get more detailed settings if you need. Click the volume setting can set up the notice, the media and the disk boot switch voice
]alarm of volume and choose the prompt operation sound and the bell and software

4.3 Display setting

Display settings contains: **Brightness, Wallpapers Settings, Automatic rotating Settings, Dormancy time** and **Font size.**

Brightness

The user can adjust brightness manually to get the lightness you want.

Wallpaper Settings

In the wallpaper setting, you can set up the wall paper and dynamic wallpaper; the wallpaper can be chosen from gallery.

Dormancy time

When the screens in light state a period of time, it will automatically lock to save the power if without any operations.

Font size

You can set up the font size according to individual's favorite, there were respectively: small, ordinary, big, huge.

4.4 Application setting

In the application setting, you can manage the running services and access rights management and development but only for developer.

Application management

In this setting, it is easy to manage and delete some applications that have been installed.
First, get into the application list, click the **according to name sort** buttons to order the alphabet and number; click the **all** menu to scan the running program or programs that provide by a third party software developers.
Click on an application, you can see the application's relevant information to clear
The cache, unload programs, clear the default value or forced to stop operation, etc

Running services

In this setting, you can end and set up some programs that are running

Access management

In this setting, by using the opening or prohibition to manage the applications to access content permissions.

4.5 Date & Time setting

In this setting interface, you can set up your system time and series options.

Time setting

You can use automatic time from the network, to choose the time zone, to set specific date and time and display format in time setting.

4.6 Language and input Setting

In this setting interface, you can choose the language you want

Input method

In here the input methods can be set by users, you can add the words in the dictionary or to delete.

Android keyboard

You can set up automatic capital function of opening or closing.

Please note:

Market applications used for the downloading of apps/games such as SLIDE ME, APTOIDE, or GETJAR are independently owned, managed and operated by their own respective parties. Should any of these applications cease to function, it is NOT a manufacturing defect with the tablet. Should you have any further questions or inquiries feel free to contact our customer service department.

If at any time in the future you should need to dispose of this product please note that waste electrical products should not be disposed of with household waste. Please recycle where facilities exist. Check with your Local Authority or retailer for recycling advice.
(Waste Electrical and Electronic equipment Directive)

Owing to continuous improvement, no prior notice will be given regarding changes on above feature and spec.

Chapter Five (Specification)

Dimension(mm*mm*mm)	260x149.3x9.9
Weight	Approx 480g
LCD	10.1″ 1024 × 600
OS	Android 4.4
Processor	ARM Cortex-A7 @ 1.3GHZ
Memory	1GB DDR3 RAM, 16GB internal
WI-FI	802.11b/g/n
Blutooth	BT2.1+EDR, BT4.0
Battery	3.7V 5000mAh Li-Poly
Service time	Up to 6 Hours (it's based on average use, and battery time/ capacity will vary between users).
Operating temperature	Between 0℃ et 40℃
Video support	AVI, WMV , FLV, RMVB, 3GP , MKV, MP4, VOB, ASF , MPG, MOV
Audio support	OGG, FLAC, WA V,ACC, APE, M4A, OGG
Picture support	JPEG, BMP , GIF,PNG
Adapter Input	AC 100-240V, 50/60Hz
Adapter Output	DC 5V ⎓ 2A

FCC Statement

FCC WARNING

This equipment has been tested and found to comply with the limits for a Class B digital device, pursuant to part 15 of the FCC rules. These limits are designed to provide reasonable protection against harmful interference in a residential installation. This equipment generates, uses and can radiate radio frequency energy and, if not installed and used in accordance with the instructions, may cause harmful interference to radio communications. However, there is no guarantee that interference will not occur in a particular installation. If this equipment does cause harmful interference to radio or television reception, which can be determined by turning the equipment off and on, the user is encouraged to try to correct the interference by one or more of the following measures:

-Reorient or relocate the receiving antenna.

-Increase the separation between the equipment and receiver.

-Connect the equipment into an outlet on a circuit different from that to which the receiver is connected.

-Consult the dealer or an experienced radio/TV technician for help.

To assure continued compliance, any changes or modifications not expressly approved by the party Responsible for compliance could void the user's authority to operate this equipment. (Example- use only shielded interface cables when connecting to computer or peripheral devices).

This equipment complies with Part 15 of the FCC Rules.Operation is subject to the following two conditions:

(1) This device may not cause harmful interference, and

(2) This device must accept any interference received, including interference that may cause undesired operation.

RF warning statement:

The device has been evaluated to meet general RF exposure requirement. The device can be used in portable exposure condition without restriction.

Caution!

The manufacturer is not responsible for any radio or TV interference caused by unauthorized modifications to this equipment. Such modifications could void the user authority to operate the equipment.