FCC Radio Test Report

FCC ID: XMF-MID1035

Original Grant

Report No.	:	TB-FCC171379
Applicant	:	Lightcomm Technology Co., Ltd.
Equipment Under Test (EUT)		
EUT Name	:	10.1"Tablet
Model No.	:	100003562
Series Model No.		MID1035
Brand Name	:	onn
Receipt Date	:	2020-01-02
Test Date	:	2020-01-03 to 2020-01-14
Issue Date	:	2020-01-14
Standards	:	FCC Part 15, Subpart E 15.407
Test Method	:	ANSI C63.10: 2013
Conclusions	:	**PASS**

In the configuration tested, the EUT complied with the standards specified above,
The EUT technically complies with the FCC and IC requirements

Test/Witness Engineer	:	Jack	Jack Deng
Test/Witness Engineer	:	IVAN SU	Ivan Su
Approved& Authorized	:	Ray Lai	Ray Lai

This report details the results of the testing carried out on one sample. The results contained in this test report do not relate to other samples of the same product. The manufacturer should ensure that all products in series production are in conformity with the product sample detailed in the report.

1A/F., Bldg.6, Yusheng Industrial Zone, The National Road No.107 Xixiang Section 467, Xixiang, Bao'an, Shenzhen, China
Tel: +86 75526509301 Fax: +86 75526509195

Contents

CONTENTS **2**
1. GENERAL INFORMATION ABOUT EUT **5**
1.1 Client Information 5
1.2 General Description of EUT (Equipment Under Test) 5
1.3 Block Diagram Showing the Configuration of System Tested 7
1.4 Description of Support Units 7
1.5 Description of Test Mode 8
1.6 Description of Test Software Setting 10
1.7 Measurement Uncertainty 12
1.8 Test Facility 12
2. TEST SUMMARY **13**
3. TEST SOFTWARE **13**
4. TEST EQUIPMENT **14**
5. CONDUCTED EMISSION TEST **15**
5.1 Test Standard and Limit 15
5.2 Test Setup 15
5.3 Test Procedure 16
5.4 Deviation From Test Standard 16
5.5 EUT Operating Mode 16
5.6 Test Data 16
6. RADIATED EMISSION TEST **17**
6.1 Test Standard and Limit 17
6.2 Test Setup 18
6.3 Test Procedure 19
6.4 Deviation From Test Standard 20
6.5 EUT Operating Condition 20
6.6 Test Data 20
7. BAND EDGE EMISSIONS **21**
7.1 Test Standard and Limit 21
7.2 Test Setup 21
7.3 Test Procedure 22
7.4 Deviation From Test Standard 22
7.5 EUT Operating Condition 22
7.6 Test Data 22
8. BANDWIDTH TEST **23**
8.1 Test Standard and Limit 23
8.2 Test Setup 23
8.3 Test Procedure 23
8.4 Deviation From Test Standard 24

8.5 EUT Operating Condition 24
8.6 Test Data 24
9. OUTPUT POWER TEST 25
9.1 Test Standard and Limit 25
9.2 Test Setup 25
9.3 Test Procedure 25
9.4 Deviation From Test Standard 25
9.5 EUT Operating Condition 25
9.6 Test Date 25
10. POWER SPECTRAL DENSITY TEST 26
10.1 Test Standard and Limit 26
9.2 Test Setup 26
10.3 Test Procedure 26
10.4 Deviation From Test Standard 27
10.5 EUT Operating Condition 27
10.6 Test Data 27
11. FREQUENCY STABILITY MEASUREMENT 28
11.1 Test Standard and Limit 28
11.2 Test Setup 28
11.3 Test Procedure 28
11.4 Deviation From Test Standard 28
11.5 EUT Operating Condition 29
11.6 Test Data 29
12. ANTENNA REQUIREMENT 30
12.1 Standard Requirement 30
12.2 Antenna Connected Construction 30
12.3 Deviation From Test Standard 30
12.4 Result 30
ATTACHMENT A-- CONDUCTED EMISSION TEST DATA 31
ATTACHMENT B-- RADIATED EMISSION TEST DATA 33
ATTACHMENT C-- RESTRICTED BANDS REQUIREMENT AND BAND-EDGE TEST DATA 155
ATTACHMENT D--BANDWIDTH TEST DATA 245
ATTACHMENT E--AVG OUTPUT POWER TEST DATA 302
ATTACHMENT F-- POWER SPECTRAL DENSITY TEST DATA 320
ATTACHMENT G----FREQUENCY STABILITY MEASUREMENT DATA 353

Revision History

Report No.	Version	Description	Issued Date
TB-FCC171379	Rev.01	Initial issue of report	2020-01-14

1. General Information about EUT

1.1 Client Information

Applicant	:	Lightcomm Technology Co., Ltd.
Address	:	UNIT 1306 13/F ARION COMMERCIAL CENTRE, 2-12 QUEEN'S ROAD WEST, SHEUNG WAN HK
Manufacturer	:	Huizhou Hengdu Electronics Co., Ltd.
Address	:	No.8 Huitai Road, Huinan High-tech Industrial Park, Huiao Avenue, Huizhou, Guangdong,China

1.2 General Description of EUT (Equipment Under Test)

EUT Name	:	10.1"Tablet	
Models No.	:	100003562, MID1035	
Model Difference	:	All these models are identical in the same PCB, layout and electrical circuit, The only difference is model name for commercial purpose.	
Product Description	:	Operation Frequency: U-NII-1: 5180MHz~5240MHz, U-NII-2A: 5260MHz~5320MHz U-NII-2C: 5500MHz~5720MHz, U-NII-3: 5745MHz~5825MHz	
		Antenna Gain:	2.92dBi FPC Antenna
		Modulation Type:	802.11a: OFDM (QPSK, BPSK, 16QAM) 802.11n: OFDM (QPSK, BPSK, 16QAM, 64QAM) 802.11ac: OFDM (QPSK, BPSK, 16QAM, 64QAM, 256QAM)
		Bit Rate of Transmitter:	802.11a: 6/9/12/18/24/36/48/54 Mbps 802.11n: up to 150Mbps 802.11ac: at most 433.3 Mbps
Power Rating	:	Adapter(TEKA012-052000UK): Input: AC 100-240V, 50/60Hz, 0.35A Output：DC 5V 2A DC 3.8V by 6600mAh Li-ion battery	
Software Version	:	QP1A.190711.020 release-keys	
Hardware Version	:	MID1035MQ_MT8768_LPDDR4_DSP_MB-VER1.1	
Remark	:	The adapter and antenna gain provided by the applicant, the verified for the RF conduction test provided by TOBY test lab.	

Note:

(1) This Test Report is FCC Part 15, Subpart E(15.407) for 802.11a/n/ac, the test procedure follows the KDB 789033 D02 General U-NII Test Procedures New Rules v02r01. More detailed features description, please refer to the manufacturer's specifications or the User's Manual.

(2) Channel List:

Frequency Band	Channel No.	Frequency	Channel No.	Frequency
5180~5240MHz **(U-NII-1)**	36	5180 MHz	44	5220 MHz
	38	5190 MHz	46	5230 MHz
	40	5200 MHz	48	5240 MHz
	42	5210 MHz		
For 20 MHz Bandwidth, use channel 36, 40, 44, 48. For 40 MHz Bandwidth, use channel 38, 46. For 80 MHz Bandwidth, use channel 42.				
Frequency Band	**Channel No.**	**Frequency**	**Channel No.**	**Frequency**
5260~5320 MHz **(U-NII-2A)**	52	5260 MHz	60	5300 MHz
	54	5270 MHz	62	5310MHz
	56	5280MHz	64	5320 MHz
	58	5290MHz		
For 20 MHz Bandwidth, use channel 52, 56, 60, 64. For 40 MHz Bandwidth, use channel 54, 62. For 80 MHz Bandwidth, use channel 58.				
Frequency Band	**Channel No.**	**Frequency**	**Channel No.**	**Frequency**
5500~5720 MHz **(U-NII-2C)**	100	5500 MHz	124	5620 MHz
	102	5510 MHz	126	5630 MHz
	104	5520 MHz	128	5640 MHz
	106	5530 MHz	132	5660 MHz
	108	5540 MHz	134	5670 MHz
	110	5550 MHz	136	5680 MHz
	112	5560 MHz	138	5690 MHz
	116	5580 MHz	140	5700 MHz
	118	5590 MHz	142	5710 MHz
	120	5600 MHz	144	5720 MHz
	122	5610 MHz		
For 20 MHz Bandwidth, use channel 100, 104, 108, 112, 116, 120, 124, 128, 132, 136, 140, 144 For 40 MHz Bandwidth, use channel 102, 110, 118, 126, 134, 142 For 80 MHz Bandwidth, use channel 106, 122, 138.				
Frequency Band	**Channel No.**	**Frequency**	**Channel No.**	**Frequency**
5745~5825MHz **(U-NII-3)**	149	5745 MHz	157	5785 MHz
	151	5755 MHz	159	5795 MHz
	153	5765 MHz	161	5805 MHz
	155	5775 MHz	165	5825 MHz
For 20 MHz Bandwidth, use channel 149, 153, 157, 161, 165. For 40 MHz Bandwidth, use channel 151, 159. For 80 MHz Bandwidth, use channel 155.				

1.3 Block Diagram Showing the Configuration of System Tested

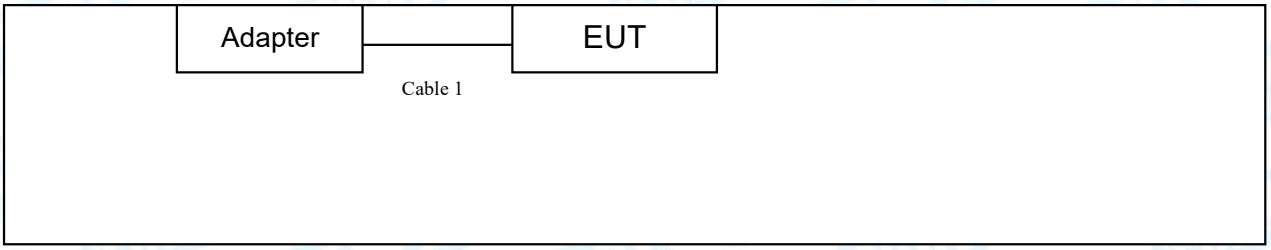

TX Mode

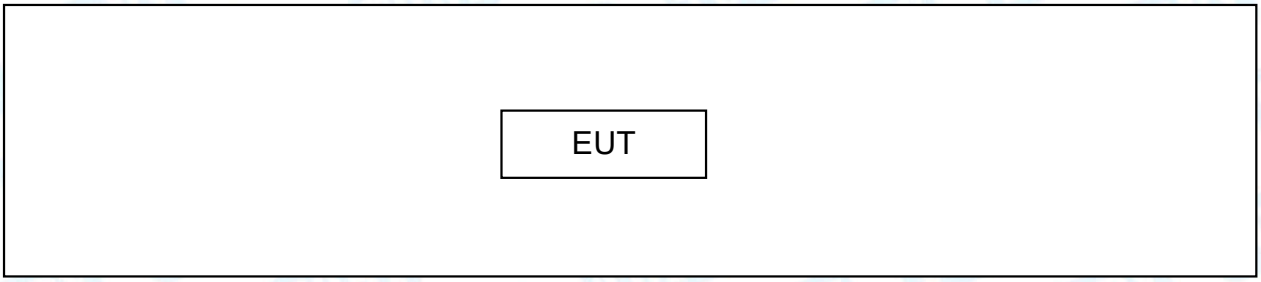

1.4 Description of Support Units

Equipment Information				
Name	**Model**	**FCC ID/VOC**	**Manufacturer**	**Used "√"**
---	----	----	---	---
Cable Information				
Number	**Shielded Type**	**Ferrite Core**	**Length**	**Note**
Cable 1	Yes	NO	1.0M	Accessory

1.5 Description of Test Mode

To investigate the maximum EMI emission characteristics generates from EUT, the test system was pre-scanning tested base on the consideration of following EUT operation mode or test configuration mode which possible have effect on EMI emission level. Each of these EUT operation mode(s) or test configuration mode(s) mentioned follow was evaluated respectively.

For Conducted Test		
Final Test Mode		**Description**
Mode 1		Charging + TX a Mode(5180MHz)
For Radiated Test Below 1GHz		
Final Test Mode		**Description**
Mode 2		Charging + TX a Mode(5180MHz)
For Radiated Test Above 1GHz		
Test Band	**Final Test Mode**	**Description**
U-NII-1	Mode 3	TX Mode 802.11a Mode Channel 36/40/48
	Mode 4	TX Mode 802.11n(HT20) Mode Channel 36/40/48
	Mode 5	TX Mode 802.11ac(VHT20) Mode Channel 36/40/48
	Mode 6	TX Mode 802.11n(HT40) Mode Channel 38/46
	Mode 7	TX Mode 802.11ac(VHT40) Mode Channel 38/46
	Mode 8	TX Mode 802.11ac(VHT80) Mode Channel 42
U-NII-2A	Mode 9	TX Mode 802.11a Mode Channel 52/56/64
	Mode 10	TX Mode 802.11n(HT20) Mode Channel 52/56/64
	Mode 11	TX Mode 802.11ac(VHT20) Mode Channel 52/56/64
	Mode 12	TX Mode 802.11n(HT40) Mode Channel 54/62
	Mode 13	TX Mode 802.11ac(VHT40) Mode Channel 54/62
	Mode 14	TX Mode 802.11ac(VHT80) Mode Channel 58
U-NII-2C	Mode 15	TX Mode 802.11a Mode Channel 100/120/144
	Mode 16	TX Mode 802.11n(HT20) Mode Channel 100/120/144
	Mode 17	TX Mode 802.11ac(VHT20) Mode Channel 100/120/144
	Mode 18	TX Mode 802.11n(HT40) Mode Channel 102/118/142
	Mode 19	TX Mode 802.11ac(VHT40) Mode Channel 102/118/142
	Mode 20	TX Mode 802.11ac(VHT80) Mode Channel 106/122/138
U-NII-3	Mode 21	TX Mode 802.11a Mode Channel 149/157/165
	Mode 22	TX Mode 802.11n(HT20) Mode Channel 149/157/165
	Mode 23	TX Mode 802.11ac(vHT20) Mode Channel 149/157/165
	Mode 24	TX Mode 802.11n(HT40) Mode Channel 151/159
	Mode 25	TX Mode 802.11ac(VHT40) Mode Channel 151/159
	Mode 26	TX Mode 802.11ac(VHT80) Mode Channel 155

Note:

(1) For all test, we have verified the construction and function in typical operation. And all the test modes were carried out with the EUT in transmitting operation in maximum power with all kinds of data rate.

According to ANSI C63.10 standards, the measurements are performed at the highest, middle, lowest available channels, and the worst case data rate as follows:

802.11a Mode: OFDM (6 Mbps)
802.11n (HT20) Mode: MCS 0
802.11n (HT40) Mode: MCS 0
802.11a(VHT20) Mode: MCS 0
802.11a(VHT40) Mode: MCS 0
802.11a(VHT80) Mode: MCS 0

(2) During the testing procedure, the continuously transmitting with the maximum power mode was programmed by the customer.

(3) The EUT in normal use it was positioned on X-plane. The worst case was found positioned on X-plane. Therefore only the test data of this X-plane was used for radiated emission measurement test.

1.6 Description of Test Software Setting

During testing channel& Power controlling software provided by the customer was used to control the operating channel as well as the output power level. The RF output power selection is for the setting of RF output power expected by the customer and is going to be fixed on the firmware of the final end product power parameters of WLAN.

Test Software: LaunchEngmode		
Test Mode: Continuously transmitting		
U-NII-1		
Mode	**Frequency (MHz)**	**Parameters**
802.11a	**5180**	**16**
	5200	**16**
	5240	**16**
802.11n(HT20)	**5180**	**16**
	5200	**16**
	5240	**16**
802.11ac(VHT20)	**5180**	**16**
	5200	**16**
	5240	**16**
802.11n(HT40)	**5190**	**16**
	5230	**16**
802.11ac(VHT40)	**5190**	**16**
	5230	**16**
802.11ac(VHT80)	**5210**	**16**
U-NII-2A		
Mode	**Frequency (MHz)**	**Parameters**
802.11a	**5260**	**16**
	5280	**16**
	5320	**16**
802.11n(HT20)	**5260**	**16**
	5280	**16**
	5320	**16**
802.11ac(HT20)	**5260**	**16**
	5280	**16**
	5320	**16**
802.11n(HT40)	**5270**	**16**
	5310	**16**
802.11ac(VHT40)	**5270**	**16**
	5310	**16**
802.11ac(VHT80)	**5290**	**16**

U-NII-2C		
Mode	Frequency (MHz)	Parameters
802.11a	5500	16
	5600	16
	5720	16
802.11n(HT20)	5500	16
	5600	16
	5720	16
802.11ac(HT20)	5500	16
	5600	16
	5720	16
802.11n(HT40)	5510	16
	5590	16
	5710	16
802.11ac(VHT40)	5510	16
	5590	16
	5710	16
802.11ac(VHT80)	5530	16
	5610	16
	5690	16
U-NII-3		
Mode	Frequency (MHz)	Parameters
802.11a	5745	16
	5785	16
	5825	16
802.11n(HT20)	5745	16
	5785	16
	5825	16
802.11ac(HT20)	5745	16
	5785	16
	5825	16
802.11n(HT40)	5755	16
	5795	16
802.11ac(VHT40)	5755	16
	5795	16
802.11ac(VHT80)	5775	16

1.7 Measurement Uncertainty

The reported uncertainty of measurement y ± U, where expended uncertainty U is based on a standard uncertainty multiplied by a coverage factor of k=2, providing a level of confidence of approximately 95 %.

Test Item	Parameters	Expanded Uncertainty (U_{Lab})
Conducted Emission	Level Accuracy: 9kHz~150kHz 150kHz to 30MHz	±3.50 dB ±3.10 dB
Radiated Emission	Level Accuracy: 9kHz to 30 MHz	±4.60 dB
Radiated Emission	Level Accuracy: 30MHz to 1000 MHz	±4.50 dB
Radiated Emission	Level Accuracy: Above 1000MHz	±4.20 dB

1.8 Test Facility

The testing was performed by the Shenzhen Toby Technology Co., Ltd., in their facilities located at:1A/F., Bldg.6, Yusheng Industrial Zone, The National Road No.107 Xixiang Section 467, Xixiang, Bao'an, Shenzhen, Guangdong, China.
At the time of testing, the following bodies accredited the Laboratory:

CNAS (L5813)
The Laboratory has been accredited by CNAS to ISO/IEC 17025: 2005 General Requirements for the Competence of Testing and Calibration Laboratories for the competence in the field of testing. And the Registration No.: CNAS L5813.

A2LA Certificate No.: 4750.01
The laboratory has been accredited by American Association for Laboratory Accreditation(A2LA) to ISO/IEC 17025：2005 General Requirements for the Competence of Testing and Calibration Laboratories for the technical competence in the field of Electrical Testing. And the A2LA Certificate No.: 4750.01.FCC Accredited Test Site Number: 854351.

IC Registration No.: (11950A-1)
The Laboratory has been registered by Certification and Engineering Bureau of Industry Canada for radio equipment testing. The site registration: Site# 11950A-1.

2. Test Summary

FCC Part 15 Subpart E(15.407)			
Standard Section FCC	Test Item	Judgment	Remark
15.203	Antenna Requirement	PASS	N/A
15.207	Conducted Emission	PASS	N/A
15.407(b)	Band Edge Emissions	PASS	N/A
15.407(a)	26dB Bandwidth&99% Bandwidth	PASS	N/A
15.407(e)	6dB Bandwidth(**only for UNII-3**)	PASS	N/A
15.407(a)	AVG Output Power	PASS	N/A
15.407(a)	Power Spectral Density	PASS	N/A
15.407(b)	Transmitter Radiated Spurious Emission	PASS	N/A
15.407(a)	Peak Excursion	PASS	N/A
15.407(g)	Frequency Stability	PASS	N/A
Note: "/" for no requirement for this test item. N/A is an abbreviation for Not Applicable.			

3. Test Software

Test Item	Test Software	Manufacturer	Version No.
Conducted Emission	EZ-EMC	EZ	CDI-03A2
Radiation Emission	EZ-EMC	EZ	FA-03A2RE
RF Conducted Measurement	MTS-8310	MWRFtest	V2.0.0.0

4. Test Equipment

Conducted Emission Test					
Equipment	**Manufacturer**	**Model No.**	**Serial No.**	**Last Cal.**	**Cal. Due Date**
EMI Test Receiver	Rohde & Schwarz	ESCI	100321	Jul. 13, 2019	Jul. 12, 2020
RF Switching Unit	Compliance Direction Systems Inc	RSU-A4	34403	Jul. 13, 2019	Jul. 12, 2020
AMN	SCHWARZBECK	NNBL 8226-2	8226-2/164	Jul. 13, 2019	Jul. 12, 2020
LISN	Rohde & Schwarz	ENV216	101131	Jul. 13, 2019	Jul. 12, 2020
Radiation Emission Test					
Equipment	**Manufacturer**	**Model No.**	**Serial No.**	**Last Cal.**	**Cal. Due Date**
Spectrum Analyzer	Agilent	E4407B	MY45106456	Jul. 13, 2019	Jul. 12, 2020
EMI Test Receiver	Rohde & Schwarz	ESPI	100010/007	Jul. 13, 2019	Jul. 12, 2020
Spectrum Analyzer	Rohde & Schwarz	FSV40-N	102197	Jan. 31, 2019	Jan. 30, 2020
Bilog Antenna	ETS-LINDGREN	3142E	00117537	Jan. 27, 2019	Jan. 26, 2020
Horn Antenna	ETS-LINDGREN	3117	00143207	Mar.03, 2019	Mar. 02, 2020
Horn Antenna	ETS-LINDGREN	BBHA 9170	BBHA9170582	Aug.07, 2019	Aug. 06, 2020
Loop Antenna	SCHWARZBECK	FMZB 1519 B	1519B-059	Jul. 13, 2019	Jul. 12, 2020
Pre-amplifier	Sonoma	310N	185903	Mar.04, 2019	Mar. 03, 2020
Pre-amplifier	HP	8449B	3008A00849	Mar.03, 2019	Mar. 02, 2020
Pre-amplifier	SKET	LNPA_1840G-50	SK201904032	Jul. 27, 2019	Jul. 26, 2020
Cable	HUBER+SUHNER	100	SUCOFLEX	Mar.03, 2019	Mar. 02, 2020
Positioning Controller	ETS-LINDGREN	2090	N/A	N/A	N/A
Antenna Conducted Emission					
Equipment	**Manufacturer**	**Model No.**	**Serial No.**	**Last Cal.**	**Cal. Due Date**
Spectrum Analyzer	Agilent	E4407B	MY45106456	Jul. 13, 2019	Jul. 12, 2020
Spectrum Analyzer	Rohde & Schwarz	ESCI	100010/007	Jul. 13, 2019	Jul. 12, 2020
MXA Signal Analyzer	Agilent	N9020A	MY49100060	Sep. 16, 2019	Sep. 15, 2020
Vector Signal Generator	Agilent	N5182A	MY50141294	Sep. 16, 2019	Sep. 15, 2020
Analog Signal Generator	Agilent	N5181A	MY50141953	Sep. 16, 2019	Sep. 15, 2020
RF Power Sensor	DARE!! Instruments	RadiPowerRPR3006W	17I00015SNO26	Sep. 16, 2019	Sep. 15, 2020
	DARE!! Instruments	RadiPowerRPR3006W	17I00015SNO29	Sep. 16, 2019	Sep. 15, 2020
	DARE!! Instruments	RadiPowerRPR3006W	17I00015SNO31	Sep. 16, 2019	Sep. 15, 2020
	DARE!! Instruments	RadiPowerRPR3006W	17I00015SNO33	Sep. 16, 2019	Sep. 15, 2020

5. Conducted Emission Test

5.1 Test Standard and Limit

5.1.1Test Standard

FCC Part 15.207

5.1.2 Test Limit

Conducted Emission Test Limit

Frequency	Maximum RF Line Voltage (dBμV)	
	Quasi-peak Level	Average Level
150kHz~500kHz	66 ~ 56 *	56 ~ 46 *
500kHz~5MHz	56	46
5MHz~30MHz	60	50

Notes:

(1) *Decreasing linearly with logarithm of the frequency.

(2) The lower limit shall apply at the transition frequencies.

(3) The limit decrease in line with the logarithm of the frequency in the range of 0.15 to 0.50MHz.

5.2 Test Setup

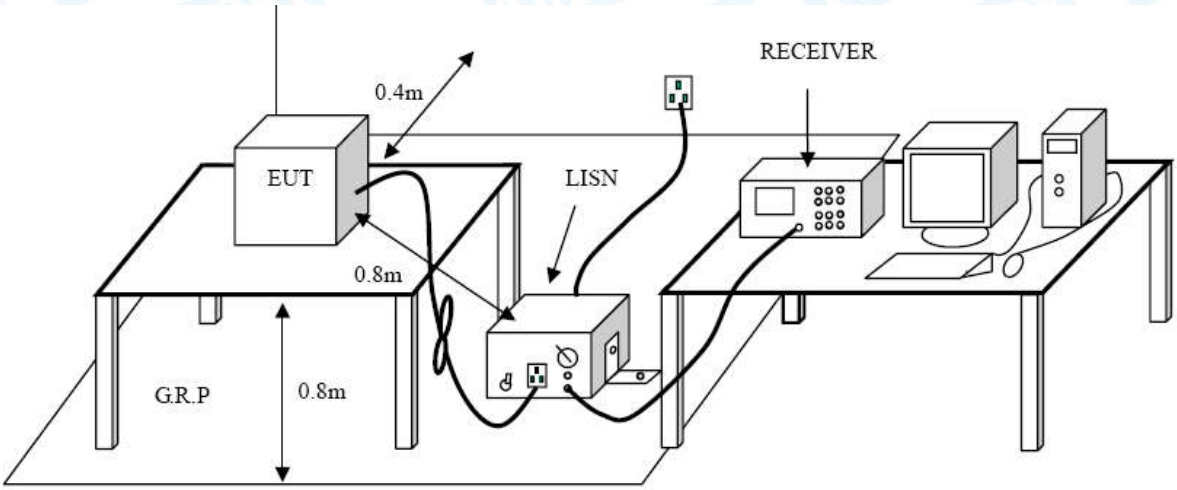

5.3 Test Procedure

The EUT was placed 0.8 meters from the horizontal ground plane with EUT being connected to the power mains through a line impedance stabilization network (LISN). All other support equipments powered from additional LISN(s). The LISN provide 50 Ohm/ 50uH of coupling impedance for the measuring instrument.

Interconnecting cables that hang closer than 40 cm to the ground plane shall be folded back and forth in the center forming a bundle 30 to 40 cm long.

I/O cables that are not connected to a peripheral shall be bundled in the center. The end of the cable may be terminated, if required, using the correct terminating impedance. The overall length shall not exceed 1 m.

LISN at least 80 cm from nearest part of EUT chassis.

The bandwidth of EMI test receiver is set at 9kHz, and the test frequency band is from 0.15MHz to 30MHz.

5.4 Deviation From Test Standard

No deviation

5.5 EUT Operating Mode

Please refer to the description of test mode.

5.6 Test Data

Please refer to the Attachment A.

6. Radiated Emission Test

6.1 Test Standard and Limit

6.1.1 Test Standard

FCC Part 15.209

6.1.2 Test Limit

Radiated Emission Limits (9kHz~1000MHz)

Frequency (MHz	Field Strength (microvolt/meter)	Measurement Distance (meters)
0.009~0.490	2400/F(KHz)	300
0.490~1.705	24000/F(KHz)	30
1.705~30.0	30	30
30~88	100	3
88~216	150	3
216~960	200	3
Above 960	500	3

Radiated Emission Limit (Above 1000MHz)

Frequency (MHz)	Distance of 3m (dBuV/m)	
	Peak	Average
Above 1000	74	54

Note:

(1) The tighter limit applies at the band edges.

(2) Emission Level(dBuV/m)=20log Emission Level(uV/m)

Limits of unwanted emission out of the restricted bands

Frequency (MHz)	EIRP Limits (dBm)	Equivalent Field Strength at 3m (dBuV/m)
5150~5250	-27	68.3
5250~5350	-27	68.3
5470~5725	-27	68.3
5725~5825	-27(Note 2)	68.3
	10(Note 2)	105.3
	15.6(Note 2)	110.9
	27(Note 2)	122.3

NOTE:

1, The following formula is used to convert the equipment isotropic radiated power (eirp) to field strength:

E= $\frac{1000000\sqrt{30P}}{3}$ uV/m, where P is the eirp (Watts)

2, According to FCC 16-24,All emissions shall be limited to a level of -27 dBm/MHz at 75 MHz or more above or below theband edge increasing linearly to 10 dBm/MHz at 25 MHz above or below the band edge, and from 25MHz above or below the band edge increasing linearly to a level of 15.6 dBm/MHz at 5 MHz above orbelow the band edge, and from 5 MHz above or below the band edge increasing linearly to a level of 27dBm/MHz at the band edge.

6.2 Test Setup

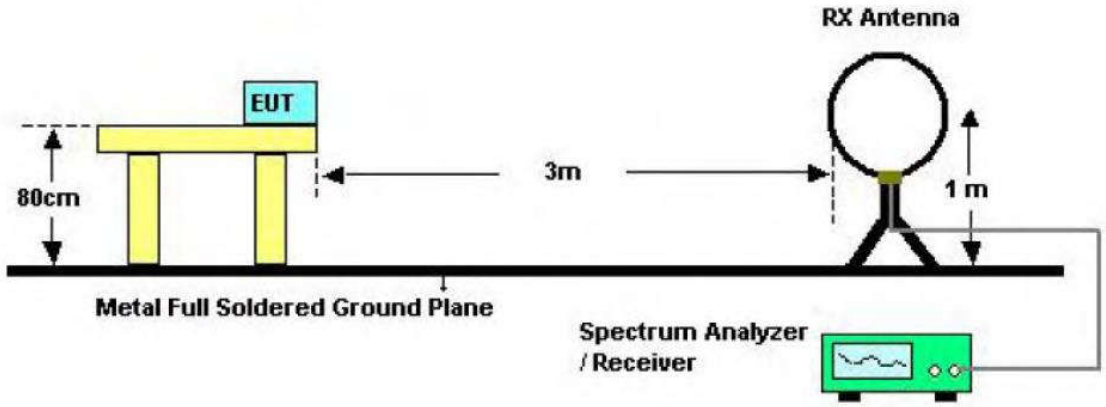

Below 30MHz Test Setup

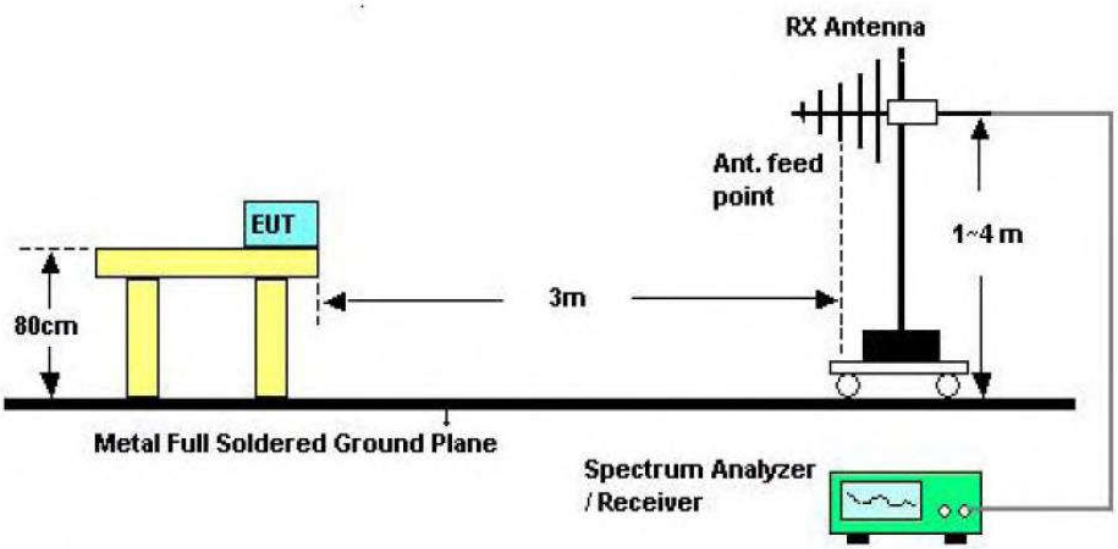

Below 1000MHz Test Setup

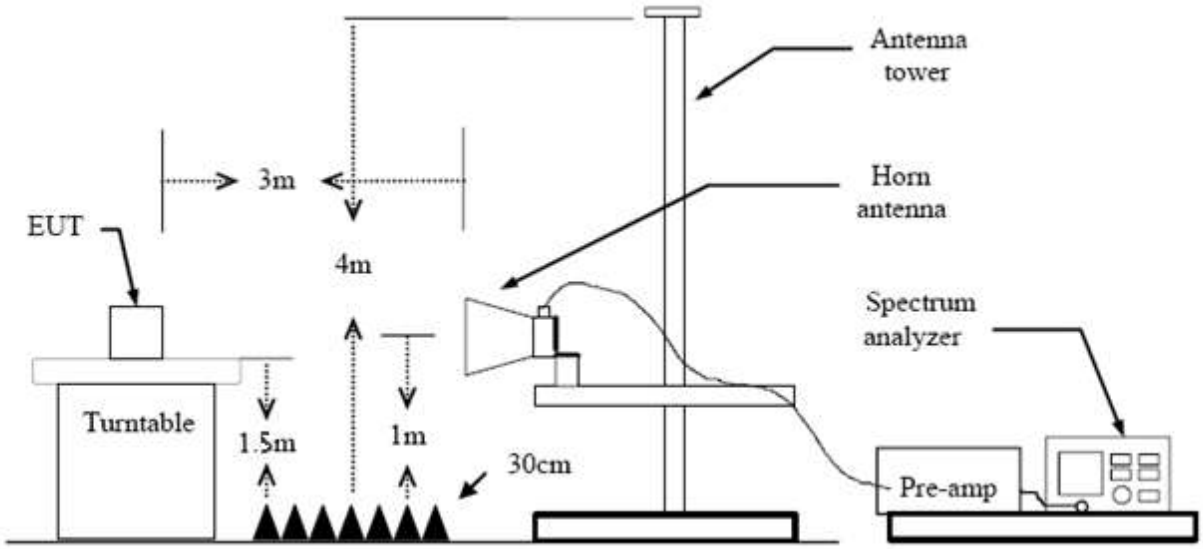

Above 1GHz Test Setup

6.3 Test Procedure

(1) The measuring distance of 3m shall be used for measurements at frequency up to 1GHz. The EUT was placed on a rotating 0.8m high above the ground, the table was rotated 360 degrees to determine the position of the highest radiation.

(2) Measurements at frequency above 1GHz. The EUT was placed on a rotating 1.5m high above the ground. RF absorbers covered the ground plane with a minimum area of 3.0m by 3.0m between the EUT and measurement receiver antenna. The RF absorber shall not exceed 30cm in high above the conducting floor. The table was rotated 360 degrees to determine the position of the highest radiation.

(3) The Test antenna shall vary between 1m and 4m, Both Horizontal and Vertical Antenna 0re set to make measurement.

(4) The initial step in collecting conducted emission data is a spectrum analyzer peak detector mode pre-scanning the measurement frequency range. Significant peaks are then marked and then Quasi Peak detector mode re-measured.

(5) If the Peak Mode measured value compliance with and lower than Quasi Peak Mode Limit Bellow 1 GHz, the EUT shall be deemed to meet QP Limits and then no additional QP Mode measurement performed. But the Peak Value and average value both need to comply with applicable limit above 1 GHz.

(6) Testing frequency range below 1GHz the measuring instrument use VBW=120 kHz with Quasi-peak detection.

(7) Testing frequency range above 1GHz the measuring instrument use RBW=1 MHz and VBW=3 MHz with Peak Detector for Peak Values, and use RBW=1 MHz and VBW=10 Hz with Peak Detector for Average Values.

(8) For the actual test configuration, please see the test setup photo.

6.4 Deviation From Test Standard

No deviation

6.5 EUT Operating Condition

The Equipment Under Test was set to Continual Transmitting in maximum power.

6.6 Test Data

Remark: During testing above 1GHz the measuring instrument use RBW=1 MHz and VBW=3 MHz with Peak Detector for Peak Values, and use RBW=1 MHz and VBW=10 Hz with Peak Detector for Average Values.

Please refer to the Attachment B.

7. Band Edge Emissions

7.1 Test Standard and Limit

7.1.1 Test Standard

FCC Part 15.407(b)

7.1.2 Test Limit

Limits of unwanted emission out of the restricted bands

Frequency (MHz)	EIRP Limits (dBm)	Equivalent Field Strength at 3m (dBuV/m)
5150~5250	-27	68.3
5250~5350	-27	68.3
5470~5725	-27	68.3
5725~5825	-27(Note 2)	68.3
	10(Note 2)	105.3
	15.6(Note 2)	110.9
	27(Note 2)	122.3

NOTE:

1, The following formula is used to convert the equipment isotropic radiated power (eirp) to field strength:

E= $\frac{1000000\sqrt{30P}}{3}$ uV/m, where P is the eirp (Watts)

2, According to FCC 16-24,All emissions shall be limited to a level of -27 dBm/MHz at 75 MHz or more above or below theband edge increasing linearly to 10 dBm/MHz at 25 MHz above or below the band edge, and from 25MHz above or below the band edge increasing linearly to a level of 15.6 dBm/MHz at 5 MHz above orbelow the band edge, and from 5 MHz above or below the band edge increasing linearly to a level of 27dBm/MHz at the band edge.

7.2 Test Setup

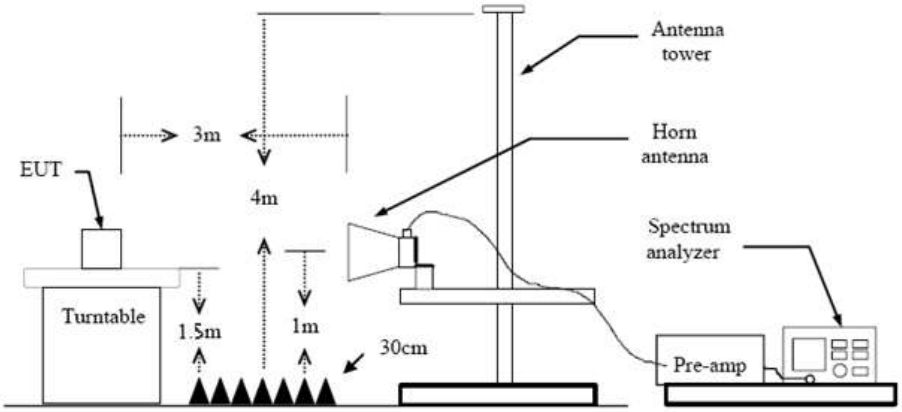

7.3 Test Procedure

(1) The measuring distance of 3m shall be used for measurements at frequency up to 1GHz. The EUT was placed on a rotating 0.8m high above the ground, the table was rotated 360 degrees to determine the position of the highest radiation.

(2) Measurements at frequency above 1GHz. The EUT was placed on a rotating 1.5m high above the ground. RF absorbers covered the ground plane with a minimum area of 3.0m by 3.0m between the EUT and measurement receiver antenna. The RF absorber shall not exceed 30cm in high above the conducting floor. The table was rotated 360 degrees to determine the position of the highest radiation.

(3) The Test antenna shall vary between 1m and 4m, Both Horizontal and Vertical Antenna 0re set to make measurement.

(4) The initial step in collecting conducted emission data is a spectrum analyzer peak detector mode pre-scanning the measurement frequency range. Significant peaks are then marked and then Quasi Peak detector mode re-measured.

(5) If the Peak Mode measured value compliance with and lower than Quasi Peak Mode Limit Bellow 1 GHz, the EUT shall be deemed to meet QP Limits and then no additional QP Mode measurement performed. But the Peak Value and average value both need to comply with applicable limit above 1 GHz.

(6) Testing frequency range below 1GHz the measuring instrument use VBW=120 kHz with Quasi-peak detection.

(7) Testing frequency range above 1GHz the measuring instrument use RBW=1 MHz and VBW=3 MHz with Peak Detector for Peak Values, and use RBW=1 MHz and VBW=10 Hz with Peak Detector for Average Values.

(8) For the actual test configuration, please see the test setup photo.

7.4 Deviation From Test Standard

No deviation

7.5 EUT Operating Condition

The Equipment Under Test was set to Continual Transmitting in maximum power.

7.6 Test Data

Please refer to the Attachment C.

8. Bandwidth Test

8.1 Test Standard and Limit

8.1.1 Test Standard

FCC Part 15.407

8.1.2 Test Limit

FCC Part 15 Subpart C(15.407)/RSS-210		
Test Item	**Limit**	**Frequency Range (MHz)**
26 Bandwidth	N/A	5150~5250
		5250~5350
		5500~5700
6 dB Bandwidth	>500kHz	5725~5850

8.2 Test Setup

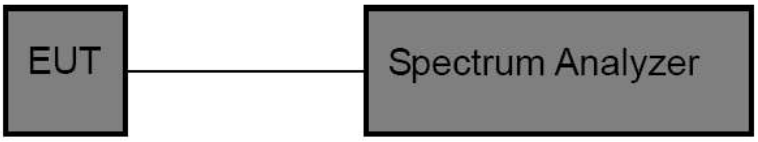

8.3 Test Procedure

(1) The EUT was directly connected to the spectrum analyzer and antenna output port as show in the block diagram above.

(2) The setting of the spectrum analyser as below:

26dB Bandwidth Test	
Spectrum Parameters	**Setting**
Attenuation	Auto
Span	>26 dB Bandwidth
RBW	Approximately 1% of the emission bandwidth
VBW	VBW>RBW
Detector	Peak
Trace	Max Hold
Sweep Time	Auto

6dB Bandwidth Test	
Spectrum Parameters	**Setting**
Attenuation	Auto
Span	>6 dB Bandwidth
RBW	100 kHz
VBW	VBW>=3*RBW
Detector	Peak
Trace	Max Hold
Sweep Time	Auto
99% Occupied Bandwidth Test	
Spectrum Parameters	**Setting**
Attenuation	Auto
RBW	1% to 5% of the OBW
VBW	≥ 3RBW
Detector	Peak
Trace	Max Hold

8.4 Deviation From Test Standard

No deviation

8.5 EUT Operating Condition

The EUT was set to continuously transmitting in each mode and low, Middle and high channel for the test.

8.6 Test Data

Please refer to the Attachment D.

9. Output Power Test

9.1 Test Standard and Limit

9.1.1 Test Standard

FCC Part 15.407 (a)

9.1.2 Test Limit

FCC Part 15 Subpart E(15.407)/RSS-210		
Test Item	**Limit**	**Frequency Range(MHz)**
Conducted Output Power	Fixed: 1 Watt (30dBm) Mobile and Portable: 250mW (24dBm)	5150~5250
	250mW (24dBm)	5250~5350
	250mW (24dBm)	5500~5700
	1 Watt (30dBm)	5725~5850

9.2 Test Setup

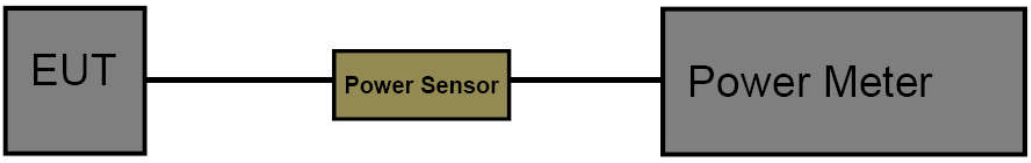

9.3 Test Procedure

The measurement is according to section 3 of KDB 789033 D02 General U-NII Test Procedures New Rules v02r01.
The EUT was connected to RF power meter via a broadband power sensor as show the block above.

9.4 Deviation From Test Standard

No deviation

9.5 EUT Operating Condition

The EUT was set to continuously transmitting in the max power during the test.

9.6 Test Date

Please refer to the Attachment E.

10. Power Spectral Density Test

10.1 Test Standard and Limit

10.1.1 Test Standard

FCC Part 15.407 (a)

10.1.2 Test Limit

FCC Part 15 Subpart E(15.407)		
Test Item	**Limit**	**Frequency Range(MHz)**
Power Spectral Density	Other than Mobile and Portable : 17dBm/MHz Mobile and Portable : 11dBm/MHz	5150~5250
	11dBm/MHz	5250~5350
	11dBm/MHz	5500~5700
	30dBm/500kHz	5725~5850

9.2 Test Setup

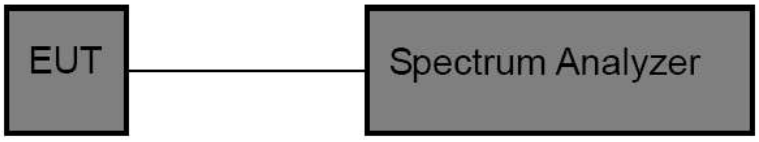

10.3 Test Procedure

The EUT was directly connected to the Spectrum Analyzer and antenna output port as show in the block diagram above. The measurement is according to KDB 789033 D02 General U-NII Test Procedures New Rules v02r01.

(1) The EUT was directly connected to the spectrum analyzer and antenna output port as show in the block diagram above.

(2) Set analyser centre frequency to transmitting frequency.

(3) Set the span to encompass the entire emissions bandwidth (EBW)(alternatively, the entire 99% OBW) of the signal.

(4) Set the RBW to: 1 MHz

(5) Set the VBW to: 3 MHz

(6) Detector: RMS

(7) Trace: Max Hold

(7) Sweep time: auto

(8) Trace average at least 100 traces in power averaging.

(9) User the peak marker function to determine the maximum amplitude level within the RBW. Apply correction to the result if different RBW is used.

10.4 Deviation From Test Standard

No deviation

10.5 EUT Operating Condition

The EUT was set to continuously transmitting in each mode and low, Middle and high channel for the test.

10.6 Test Data

Please refer to the Attachment F.

11. Frequency Stability Measurement

11.1 Test Standard and Limit

11.1.1 Test Standard

FCC Part 15.407

11.1.2 Test Limit

FCC Part 15 Subpart C(15.407)		
Test Item	**Limit**	**Frequency Range(MHz)**
Peak Excursion Measurement	Manufacturers of U-NII devices are responsible for ensuring frequency stability such that an emission is maintained within the band of operation under all conditions of normal operation as specified in the users manual	5150~5250
		5250~5350
		5500~5700
		5725~5850

11.2 Test Setup

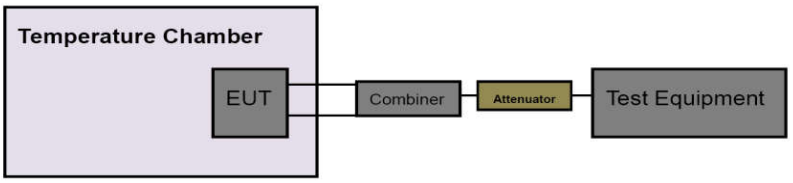

11.3 Test Procedure

The EUT was directly connected to the Spectrum Analyzer and antenna output port as show in the block diagram above.

(1) The EUT was directly connected to the spectrum analyzer and antenna output port as show in the block diagram above.
(2) Set analyser centre frequency to transmitting frequency.
(3) Set the span to encompass the entire emissions bandwidth (EBW) of the signal.
(4) Set the RBW to: 10 kHz, VBW=10 kHz with peak detector and maxhold settings.
(5) The test extreme voltage is to change the primary supply voltage from 85 to 115 percent of the nominal value.
(6) Extreme temperature is 0℃~50℃

11.4 Deviation From Test Standard

No deviation

11.5 EUT Operating Condition

The EUT was set to continuously transmitting in continuously un-modulation transmitting mode.

11.6 Test Data

Please refer to the Attachment G.

12. Antenna Requirement

12.1 Standard Requirement

12.1.1 Standard

FCC Part 15.203

12.1.2 Requirement

An intentional radiator shall be designed to ensure that no antenna other than that furnished by the responsible party shall be used with the device. The use of a permanently attached antenna or of an antenna that uses a unique coupling to the intentional radiator shall be considered sufficient to comply with the provisions of this Section. The manufacturer may design the unit so that a broken antenna can be replaced by the user, but the use of a standard antenna jack or electrical connector is prohibited.

12.2 Antenna Connected Construction

The gains of the antenna used for transmitting is 2.92 dBi, and the antenna de-signed with permanent attachment and no consideration of replacement. Please see the EUT photo for details.

12.3 Deviation From Test Standard

No deviation

12.4 Result

The EUT antennas are FPC Antenna. It complies with the standard requirement.

Antenna Type
☐ Permanent attached antenna
☑ Unique connector antenna
☐ Professional installation antenna

Attachment A-- Conducted Emission Test Data

Remark: All channels have been tested and Shows only the worst channels.

Temperature:	24.8 ℃	**Relative Humidity:**	42%
Test Voltage:	AC 120V/60 Hz		
Terminal:	Line		
Test Mode:	TX 802.11a Mode CH36		
Remark:	Only worse case is reported.		

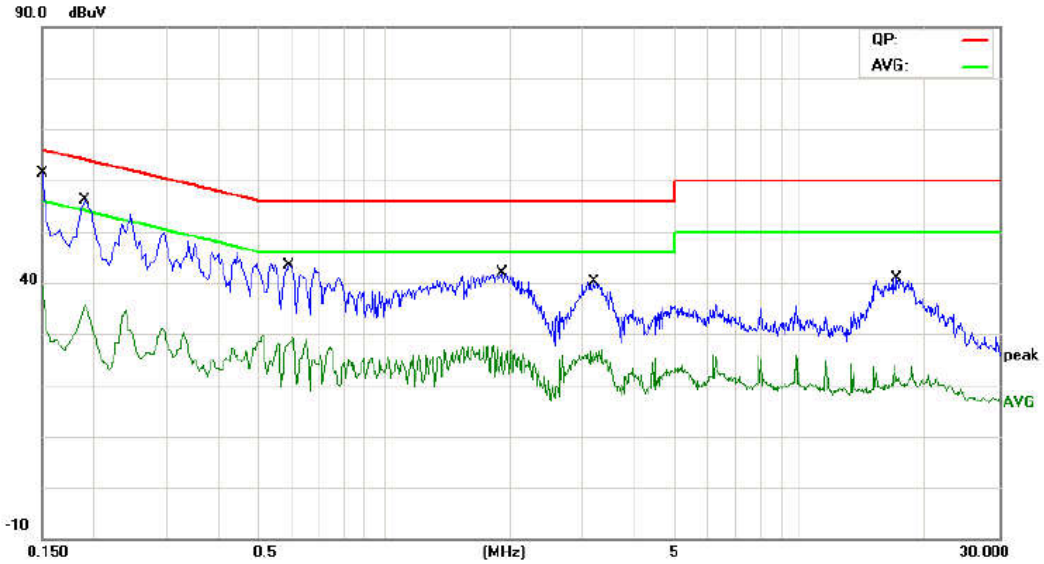

No.	Mk.	Freq.	Reading Level	Correct Factor	Measure-ment	Limit	Over	
		MHz	dBuV	dB	dBuV	dBuV	dB	Detector
1	*	0.1500	48.05	9.75	57.80	65.99	-8.19	QP
2		0.1500	32.32	9.75	42.07	55.99	-13.92	AVG
3		0.1900	36.50	9.78	46.28	64.03	-17.75	QP
4		0.1900	18.62	9.78	28.40	54.03	-25.63	AVG
5		0.5899	28.64	9.96	38.60	56.00	-17.40	QP
6		0.5899	17.50	9.96	27.46	46.00	-18.54	AVG
7		1.9140	29.06	9.85	38.91	56.00	-17.09	QP
8		1.9140	15.96	9.85	25.81	46.00	-20.19	AVG
9		3.1820	27.51	9.86	37.37	56.00	-18.63	QP
10		3.1820	15.88	9.86	25.74	46.00	-20.26	AVG
11		17.0260	20.36	9.84	30.20	60.00	-29.80	QP
12		17.0260	9.32	9.84	19.16	50.00	-30.84	AVG

*:Maximum data x:Over limit !:over margin

Emission Level= Read Level+ Correct Factor

Temperature:	24.8 ℃	**Relative Humidity:**	42%
Test Voltage:	AC 120V/60 Hz		
Terminal:	Neutral		
Test Mode:	TX 802.11a Mode CH36		
Remark:	Only worse case is reported		

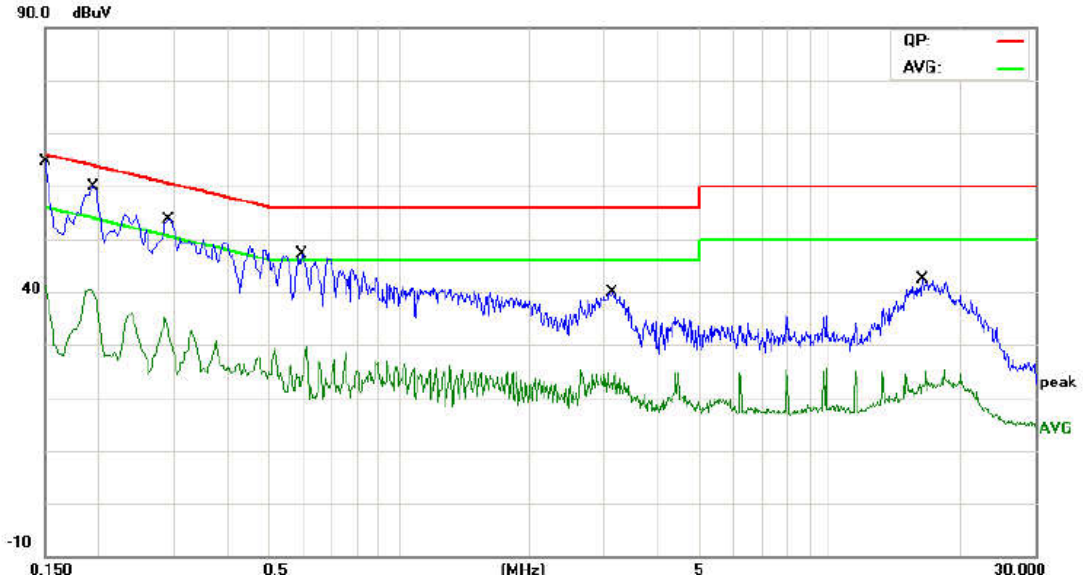

No.	Mk.	Freq.	Reading Level	Correct Factor	Measure-ment	Limit	Over	
		MHz	dBuV	dB	dBuV	dBuV	dB	Detector
1	*	0.1500	46.72	9.60	56.32	65.99	-9.67	QP
2		0.1500	27.04	9.60	36.64	55.99	-19.35	AVG
3		0.1940	43.21	9.57	52.78	63.86	-11.08	QP
4		0.1940	25.54	9.57	35.11	53.86	-18.75	AVG
5		0.2900	36.44	9.70	46.14	60.52	-14.38	QP
6		0.2900	20.10	9.70	29.80	50.52	-20.72	AVG
7		0.5940	31.53	9.79	41.32	56.00	-14.68	QP
8		0.5940	13.07	9.79	22.86	46.00	-23.14	AVG
9		3.1380	27.20	9.86	37.06	56.00	-18.94	QP
10		3.1380	13.21	9.86	23.07	46.00	-22.93	AVG
11		16.4260	21.40	9.79	31.19	60.00	-28.81	QP
12		16.4260	9.98	9.79	19.77	50.00	-30.23	AVG

*:Maximum data x:Over limit !:over margin

Emission Level= Read Level+ Correct Factor

Attachment B-- Radiated Emission Test Data

9 KHz~30 MHz

From 9 KHz to 30 MHz: Conclusion: PASS

Note: The amplitude of spurious emissions which are attenuated by more than 20dB below the permissible value has no need to be reported.

30MHz~1GHz

Temperature:	24.6 ℃	**Relative Humidity:**	43%
Test Voltage:	AC 120V/60Hz		
Ant. Pol.	Horizontal		
Test Mode:	TX 802.11a Mode 5180MHz (U-NII-1)		
Remark:	Only worse case is reported		

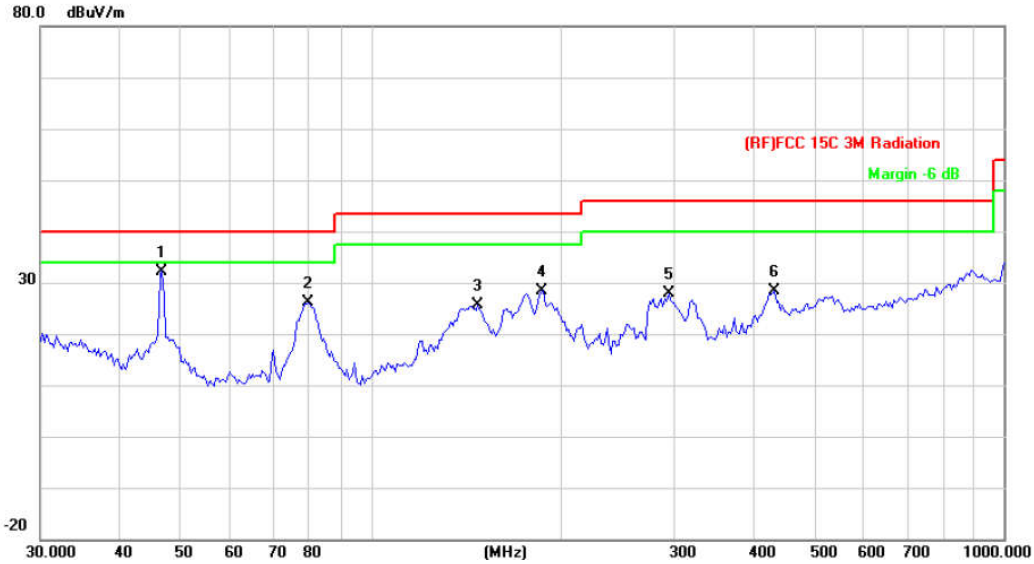

No.	Mk.	Freq.	Reading Level	Correct Factor	Measure-ment	Limit	Over	
		MHz	dBuV	dB/m	dBuV/m	dBuV/m	dB	Detector
1	*	46.6664	54.47	-22.22	32.25	40.00	-7.75	QP
2		79.5207	48.78	-22.60	26.18	40.00	-13.82	QP
3		147.4036	47.36	-21.70	25.66	43.50	-17.84	QP
4		185.7880	48.35	-19.92	28.43	43.50	-15.07	QP
5		295.1469	44.00	-16.10	27.90	46.00	-18.10	QP
6		434.0649	40.35	-11.87	28.48	46.00	-17.52	QP

*:Maximum data x:Over limit !:over margin

Emission Level= Read Level+ Correct Factor

Temperature:	24.6 ℃	**Relative Humidity:**	43%
Test Voltage:	AC 120V/60Hz		
Ant. Pol.	Vertical		
Test Mode:	TX 802.11a Mode 5180MHz (U-NII-1)		
Remark:	Only worse case is reported.		

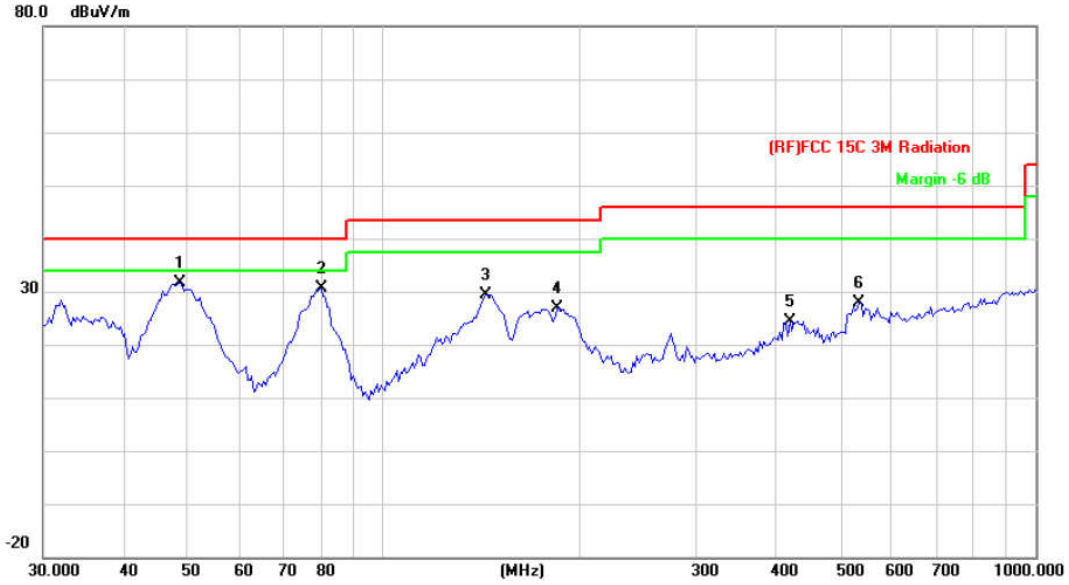

No.	Mk.	Freq.	Reading Level	Correct Factor	Measure-ment	Limit	Over	
		MHz	dBuV	dB/m	dBuV/m	dBuV/m	dB	Detector
1	*	48.6719	54.58	-22.90	31.68	40.00	-8.32	QP
2		80.0806	53.11	-22.56	30.55	40.00	-9.45	QP
3		143.3257	51.55	-22.14	29.41	43.50	-14.09	QP
4		184.4898	46.85	-19.97	26.88	43.50	-16.62	QP
5		419.1080	36.34	-11.97	24.37	46.00	-21.63	QP
6		535.7073	37.03	-9.26	27.77	46.00	-18.23	QP

*:Maximum data x:Over limit !:over margin

Emission Level= Read Level+ Correct Factor

5180MHz-5240MHz(U-NII-1)

Temperature:	25 ℃	**Relative Humidity:**	55%
Test Voltage:	DC 3.8V		
Ant. Pol.	Horizontal		
Test Mode:	TX 802.11a Mode 5180MHz (U-NII-1)		
Remark:	No report for the emission which more than 10 dB below the prescribed limit. Only worse case is reported.		

No.	Mk.	Freq.	Reading Level	Correct Factor	Measure-ment	Limit	Over	
		MHz	dBm	dB	dBm	dBm	dB	Detector
1		10360.40	30.25	20.50	50.75	68.30	-17.55	peak
2	*	10360.40	21.87	20.50	42.37	54.00	-11.63	AVG

Emission Level= Read Level+ Correct Factor

Temperature:	25 ℃	**Relative Humidity:**	55%
Test Voltage:	DC 3.8V		
Ant. Pol.	Vertical		
Test Mode:	TX 802.11a Mode 5180MHz (U-NII-1)		
Remark:	No report for the emission which more than 10 dB below the prescribed limit. Only worse case is reported.		

No.	Mk.	Freq.	Reading Level	Correct Factor	Measure-ment	Limit	Over	
		MHz	dBm	dB	dBm	dBm	dB	Detector
1		10360.84	30.75	20.50	51.25	68.30	-17.05	peak
2	*	10360.84	22.58	20.50	43.08	54.00	-10.92	AVG

Emission Level= Read Level+ Correct Factor

Temperature:	25 ℃	**Relative Humidity:**	55%
Test Voltage:	DC 3.8V		
Ant. Pol.	Horizontal		
Test Mode:	TX 802.11a Mode 5200MHz (U-NII-1)		
Remark:	No report for the emission which more than 10 dB below the prescribed limit.		

No.	Mk.	Freq.	Reading Level	Correct Factor	Measure-ment	Limit	Over	
		MHz	dBm	dB	dBm	dBm	dB	Detector
1		10400.20	31.25	20.56	51.81	68.30	-16.49	peak
2	*	10400.20	22.34	20.56	42.90	54.00	-11.10	AVG

Emission Level= Read Level+ Correct Factor

Temperature:	25 ℃	**Relative Humidity:**	55%
Test Voltage:	DC 3.8V		
Ant. Pol.	Vertical		
Test Mode:	TX 802.11a Mode 5200MHz (U-NII-1)		
Remark:	No report for the emission which more than 10 dB below the prescribed limit.		

No.	Mk.	Freq.	Reading Level	Correct Factor	Measure-ment	Limit	Over	
		MHz	dBm	dB	dBm	dBm	dB	Detector
1	*	10400.20	21.96	20.56	42.52	54.00	-11.48	AVG
2		10400.52	31.52	20.56	52.08	68.30	-16.22	peak

Emission Level= Read Level+ Correct Factor

Temperature:	25 ℃	**Relative Humidity:**	55%
Test Voltage:	DC 3.8V		
Ant. Pol.	Horizontal		
Test Mode:	TX 802.11a Mode 5240MHz (U-NII-1)		
Remark:	No report for the emission which more than 10 dB below the prescribed limit.		

No.	Mk.	Freq.	Reading Level	Correct Factor	Measure-ment	Limit	Over	
		MHz	dBm	dB	dBm	dBm	dB	Detector
1		10480.25	30.25	20.68	50.93	68.30	-17.37	peak
2	*	10480.25	21.24	20.68	41.92	54.00	-12.08	AVG

Emission Level= Read Level+ Correct Factor

Temperature:	25 ℃	**Relative Humidity:**	55%
Test Voltage:	DC 3.8V		
Ant. Pol.	Vertical		
Test Mode:	TX 802.11a Mode 5240MHz (U-NII-1)		
Remark:	No report for the emission which more than 10 dB below the prescribed limit.		

No.	Mk.	Freq.	Reading Level	Correct Factor	Measure-ment	Limit	Over	
		MHz	dBm	dB	dBm	dBm	dB	Detector
1		10480.56	30.85	20.68	51.53	68.30	-16.77	peak
2	*	10480.56	20.85	20.68	41.53	54.00	-12.47	AVG

Emission Level= Read Level+ Correct Factor

Temperature:	25 ℃	**Relative Humidity:**	55%
Test Voltage:	DC 3.8V		
Ant. Pol.	Horizontal		
Test Mode:	TX 802.11n(HT20) Mode 5180MHz (U-NII-1)		
Remark:	No report for the emission which more than 10 dB below the prescribed limit.		

No.	Mk.	Freq.	Reading Level	Correct Factor	Measure-ment	Limit	Over	
		MHz	dBm	dB	dBm	dBm	dB	Detector
1		10360.25	29.52	20.50	50.02	68.30	-18.28	peak
2	*	10360.25	20.21	20.50	40.71	54.00	-13.29	AVG

Emission Level= Read Level+ Correct Factor

Temperature:	25 ℃	**Relative Humidity:**	55%
Test Voltage:	DC 3.8V		
Ant. Pol.	Vertical		
Test Mode:	TX 802.11n(HT20) Mode 5180MHz (U-NII-1)		
Remark:	No report for the emission which more than 10 dB below the prescribed limit.		

No.	Mk.	Freq.	Reading Level	Correct Factor	Measure-ment	Limit	Over	
		MHz	dBm	dB	dBm	dBm	dB	Detector
1	*	10359.70	20.36	20.50	40.86	54.00	-13.14	AVG
2		10360.25	30.24	20.50	50.74	68.30	-17.56	peak

Emission Level= Read Level+ Correct Factor

Temperature:	25 ℃	**Relative Humidity:**	55%
Test Voltage:	DC 3.8V		
Ant. Pol.	Horizontal		
Test Mode:	TX 802.11n(HT20) Mode 5200MHz (U-NII-1)		
Remark:	No report for the emission which more than 10 dB below the prescribed limit.		

No.	Mk.	Freq.	Reading Level	Correct Factor	Measure-ment	Limit	Over	
		MHz	dBm	dB	dBm	dBm	dB	Detector
1		10400.50	29.88	20.56	50.44	68.30	-17.86	peak
2	*	10400.50	19.85	20.56	40.41	54.00	-13.59	AVG

Emission Level= Read Level+ Correct Factor

Temperature:	25 ℃	**Relative Humidity:**	55%
Test Voltage:	DC 3.8V		
Ant. Pol.	Vertical		
Test Mode:	TX 802.11n(HT20) Mode 5200MHz (U-NII-1)		
Remark:	No report for the emission which more than 10 dB below the prescribed limit.		

No.	Mk.	Freq.	Reading Level	Correct Factor	Measure-ment	Limit	Over	
		MHz	dBm	dB	dBm	dBm	dB	Detector
1		10400.80	29.35	20.56	49.91	68.30	-18.39	peak
2	*	10400.80	20.15	20.56	40.71	54.00	-13.29	AVG

Emission Level= Read Level+ Correct Factor

Temperature:	25 ℃	**Relative Humidity:**	55%
Test Voltage:	DC 3.8V		
Ant. Pol.	Horizontal		
Test Mode:	TX 802.11n(HT20) Mode 5240MHz (U-NII-1)		
Remark:	No report for the emission which more than 10 dB below the prescribed limit.		

No.	Mk.	Freq.	Reading Level	Correct Factor	Measure-ment	Limit	Over	
		MHz	dBm	dB	dBm	dBm	dB	Detector
1		10480.52	29.77	20.68	50.45	68.30	-17.85	peak
2	*	10480.52	20.15	20.68	40.83	54.00	-13.17	AVG

Emission Level= Read Level+ Correct Factor

Temperature:	25 ℃	**Relative Humidity:**	55%
Test Voltage:	DC 3.8V		
Ant. Pol.	Vertical		
Test Mode:	TX 802.11n(HT20) Mode 5240MHz (U-NII-1)		
Remark:	No report for the emission which more than 10 dB below the prescribed limit.		

No.	Mk.	Freq.	Reading Level	Correct Factor	Measure-ment	Limit	Over	
		MHz	dBm	dB	dBm	dBm	dB	Detector
1	*	10480.20	20.05	20.68	40.73	54.00	-13.27	AVG
2		10480.50	29.38	20.68	50.06	68.30	-18.24	peak

Emission Level= Read Level+ Correct Factor

Temperature:	25 ℃	**Relative Humidity:**	55%
Test Voltage:	DC 3.8V		
Ant. Pol.	Horizontal		
Test Mode:	TX 802.11ac(VHT20) Mode 5180MHz (U-NII-1)		
Remark:	No report for the emission which more than 10 dB below the prescribed limit.		

No.	Mk.	Freq.	Reading Level	Correct Factor	Measure-ment	Limit	Over	
		MHz	dBm	dB	dBm	dBm	dB	Detector
1		10360.25	28.66	20.50	49.16	68.30	-19.14	peak
2	*	10360.25	19.25	20.50	39.75	54.00	-14.25	AVG

Emission Level= Read Level+ Correct Factor

Temperature:	25 ℃	**Relative Humidity:**	55%
Test Voltage:	DC 3.8V		
Ant. Pol.	Vertical		
Test Mode:	TX 802.11ac(VHT20) Mode 5180MHz (U-NII-1)		
Remark:	No report for the emission which more than 10 dB below the prescribed limit.		

No.	Mk.	Freq.	Reading Level	Correct Factor	Measure-ment	Limit	Over	
		MHz	dBm	dB	dBm	dBm	dB	Detector
1		10360.70	29.34	20.50	49.84	68.30	-18.46	peak
2	*	10360.70	18.96	20.50	39.46	54.00	-14.54	AVG

Emission Level= Read Level+ Correct Factor

Temperature:	25 ℃	**Relative Humidity:**	55%
Test Voltage:	DC 3.8V		
Ant. Pol.	Horizontal		
Test Mode:	TX 802.11ac(VHT20) Mode 5200MHz (U-NII-1)		
Remark:	No report for the emission which more than 10 dB below the prescribed limit.		

No.	Mk.	Freq.	Reading Level	Correct Factor	Measure-ment	Limit	Over	
		MHz	dBm	dB	dBm	dBm	dB	Detector
1		10400.82	29.74	20.56	50.30	68.30	-18.00	peak
2	*	10400.82	19.25	20.56	39.81	54.00	-14.19	AVG

Emission Level= Read Level+ Correct Factor

Temperature:	25 ℃	**Relative Humidity:**	55%
Test Voltage:	DC 3.8V		
Ant. Pol.	Vertical		
Test Mode:	TX 802.11ac(VHT20) Mode 5200MHz (U-NII-1)		
Remark:	No report for the emission which more than 10 dB below the prescribed limit.		

No.	Mk.	Freq.	Reading Level	Correct Factor	Measure-ment	Limit	Over	
		MHz	dBm	dB	dBm	dBm	dB	Detector
1		10400.85	29.87	20.56	50.43	68.30	-17.87	peak
2	*	10400.85	20.13	20.56	40.69	54.00	-13.31	AVG

Emission Level= Read Level+ Correct Factor

Temperature:	25 ℃	**Relative Humidity:**	55%
Test Voltage:	DC 3.8V		
Ant. Pol.	Horizontal		
Test Mode:	TX 802.11 ac(VHT20) Mode 5240MHz (U-NII-1)		
Remark:	No report for the emission which more than 10 dB below the prescribed limit.		

No.	Mk.	Freq.	Reading Level	Correct Factor	Measure-ment	Limit	Over	
		MHz	dBm	dB	dBm	dBm	dB	Detector
1		10480.58	30.08	20.68	50.76	68.30	-17.54	peak
2	*	10480.58	20.07	20.68	40.75	54.00	-13.25	AVG

Emission Level= Read Level+ Correct Factor

Temperature:	25 ℃	**Relative Humidity:**	55%
Test Voltage:	DC 3.8V		
Ant. Pol.	Vertical		
Test Mode:	TX 802.11ac(VHT20) Mode 5240MHz (U-NII-1)		
Remark:	No report for the emission which more than 10 dB below the prescribed limit.		

No.	Mk.	Freq.	Reading Level	Correct Factor	Measure-ment	Limit	Over	
		MHz	dBm	dB	dBm	dBm	dB	Detector
1	*	10480.17	19.55	20.68	40.23	54.00	-13.77	AVG
2		10480.45	30.25	20.68	50.93	68.30	-17.37	peak

Emission Level= Read Level+ Correct Factor

Temperature:	25 ℃	**Relative Humidity:**	55%
Test Voltage:	DC 3.8V		
Ant. Pol.	Horizontal		
Test Mode:	TX 802.11n(HT40) Mode 5190MHz (U-NII-1)		
Remark:	No report for the emission which more than 10 dB below the prescribed limit.		

No.	Mk.	Freq.	Reading Level	Correct Factor	Measure-ment	Limit	Over	
		MHz	dBm	dB	dBm	dBm	dB	Detector
1		10380.25	28.65	20.53	49.18	68.30	-19.12	peak
2	*	10380.25	18.65	20.53	39.18	54.00	-14.82	AVG

Emission Level= Read Level+ Correct Factor

Temperature:	25 ℃	**Relative Humidity:**	55%
Test Voltage:	DC 3.8V		
Ant. Pol.	Vertical		
Test Mode:	TX 802.11n(HT40) Mode 5190MHz (U-NII-1)		
Remark:	No report for the emission which more than 10 dB below the prescribed limit.		

No.	Mk.	Freq.	Reading Level	Correct Factor	Measure-ment	Limit	Over	
		MHz	dBm	dB	dBm	dBm	dB	Detector
1		10380.72	19.25	20.53	39.78	54.00	-14.22	AVG
2	*	10380.74	30.14	20.53	50.67	68.30	-17.63	peak

Emission Level= Read Level+ Correct Factor

Temperature:	25 ℃	**Relative Humidity:**	55%
Test Voltage:	DC 3.8V		
Ant. Pol.	Horizontal		
Test Mode:	TX 802.11n(HT40) Mode 5230MHz (U-NII-1)		
Remark:	No report for the emission which more than 10 dB below the prescribed limit.		

No.	Mk.	Freq.	Reading Level	Correct Factor	Measure-ment	Limit	Over	
		MHz	dBm	dB	dBm	dBm	dB	Detector
1		10460.58	29.74	20.65	50.39	68.30	-17.91	peak
2	*	10460.58	19.74	20.65	40.39	54.00	-13.61	AVG

Emission Level= Read Level+ Correct Factor

Temperature:	25 ℃	**Relative Humidity:**	55%
Test Voltage:	DC 3.8V		
Ant. Pol.	Vertical		
Test Mode:	TX 802.11n(HT40) Mode 5230MHz (U-NII-1)		
Remark:	No report for the emission which more than 10 dB below the prescribed limit.		

No.	Mk.	Freq.	Reading Level	Correct Factor	Measure-ment	Limit	Over	
		MHz	dBm	dB	dBm	dBm	dB	Detector
1		10460.64	30.87	20.65	51.52	68.30	-16.78	peak
2	*	10460.64	20.05	20.65	40.70	54.00	-13.30	AVG

Emission Level= Read Level+ Correct Factor

Temperature:	25 ℃	**Relative Humidity:**	55%
Test Voltage:	DC 3.8V		
Ant. Pol.	Horizontal		
Test Mode:	TX 802.11ac(VHT40) Mode 5190MHz (U-NII-1)		
Remark:	No report for the emission which more than 10 dB below the prescribed limit.		

No.	Mk.	Freq.	Reading Level	Correct Factor	Measure-ment	Limit	Over	
		MHz	dBm	dB	dBm	dBm	dB	Detector
1		10380.50	29.54	20.53	50.07	68.30	-18.23	peak
2	*	10380.50	18.97	20.53	39.50	54.00	-14.50	AVG

Emission Level= Read Level+ Correct Factor

Temperature:	25 ℃	**Relative Humidity:**	55%
Test Voltage:	DC 3.8V		
Ant. Pol.	Vertical		
Test Mode:	TX 802.11ac(VHT40) Mode 5190MHz (U-NII-1)		
Remark:	No report for the emission which more than 10 dB below the prescribed limit.		

No.	Mk.	Freq.	Reading Level	Correct Factor	Measure-ment	Limit	Over	
		MHz	dBm	dB	dBm	dBm	dB	Detector
1		10380.23	30.62	20.53	51.15	68.30	-17.15	peak
2	*	10380.23	19.24	20.53	39.77	54.00	-14.23	AVG

Emission Level= Read Level+ Correct Factor

Temperature:	25 ℃	**Relative Humidity:**	55%
Test Voltage:	DC 3.8V		
Ant. Pol.	Horizontal		
Test Mode:	TX 802.11ac(VHT40) Mode 5230MHz (U-NII-1)		
Remark:	No report for the emission which more than 10 dB below the prescribed limit.		

No.	Mk.	Freq.	Reading Level	Correct Factor	Measure-ment	Limit	Over	
		MHz	dBm	dB	dBm	dBm	dB	Detector
1		10460.25	29.67	20.65	50.32	68.30	-17.98	peak
2	*	10460.25	18.95	20.65	39.60	54.00	-14.40	AVG

Emission Level= Read Level+ Correct Factor

Temperature:	25 ℃	**Relative Humidity:**	55%
Test Voltage:	DC 3.8V		
Ant. Pol.	Vertical		
Test Mode:	TX 802.11ac(VHT40) Mode 5230MHz (U-NII-1)		
Remark:	No report for the emission which more than 10 dB below the prescribed limit.		

No.	Mk.	Freq.	Reading Level	Correct Factor	Measure-ment	Limit	Over	
		MHz	dBm	dB	dBm	dBm	dB	Detector
1		10460.55	30.27	20.65	50.92	68.30	-17.38	peak
2	*	10460.55	19.56	20.65	40.21	54.00	-13.79	AVG

Emission Level= Read Level+ Correct Factor

Temperature:	25 ℃	**Relative Humidity:**	55%
Test Voltage:	DC 3.8V		
Ant. Pol.	Horizontal		
Test Mode:	TX 802.11ac(VHT80) Mode 5210MHz (U-NII-1)		
Remark:	No report for the emission which more than 10 dB below the prescribed limit.		

No.	Mk.	Freq.	Reading Level	Correct Factor	Measure-ment	Limit	Over	
		MHz	dBm	dB	dBm	dBm	dB	Detector
1		10420.74	29.61	20.59	50.20	68.30	-18.10	peak
2	*	10420.74	19.26	20.59	39.85	54.00	-14.15	AVG

Emission Level= Read Level+ Correct Factor

Temperature:	25 ℃	**Relative Humidity:**	55%
Test Voltage:	DC 3.8V		
Ant. Pol.	Vertical		
Test Mode:	TX 802.11ac(VHT80) Mode 5210MHz (U-NII-1)		
Remark:	No report for the emission which more than 10 dB below the prescribed limit.		

No.	Mk.	Freq.	Reading Level	Correct Factor	Measure-ment	Limit	Over	
		MHz	dBm	dB	dBm	dBm	dB	Detector
1		10420.65	29.57	20.59	50.16	68.30	-18.14	peak
2	*	10420.65	18.63	20.59	39.22	54.00	-14.78	AVG

Emission Level= Read Level+ Correct Factor

5260MHz-5320MHz(U-NII-2A)

Temperature:	25 ℃	**Relative Humidity:**	55%
Test Voltage:	DC 3.8V		
Ant. Pol.	Horizontal		
Test Mode:	TX 802.11a Mode 5260MHz (U-NII-2A)		
Remark:	No report for the emission which more than 10 dB below the prescribed limit. Only worse case is reported.		

No.	Mk.	Freq.	Reading Level	Correct Factor	Measure-ment	Limit	Over	
		MHz	dBm	dB	dBm	dBm	dB	Detector
1		10520.35	28.69	20.73	49.42	68.30	-18.88	peak
2	*	10520.35	19.25	20.73	39.98	54.00	-14.02	AVG

Emission Level= Read Level+ Correct Factor

Temperature:	25 ℃	**Relative Humidity:**	55%
Test Voltage:	DC 3.8V		
Ant. Pol.	Vertical		
Test Mode:	TX 802.11a Mode 5260MHz (U-NII-2A)		
Remark:	No report for the emission which more than 10 dB below the prescribed limit. Only worse case is reported.		

No.	Mk.	Freq.	Reading Level	Correct Factor	Measure-ment	Limit	Over	
		MHz	dBm	dB	dBm	dBm	dB	Detector
1		10520.60	29.74	20.73	50.47	68.30	-17.83	peak
2	*	10520.60	18.66	20.73	39.39	54.00	-14.61	AVG

Emission Level= Read Level+ Correct Factor

Temperature:	25 ℃	**Relative Humidity:**	55%
Test Voltage:	DC 3.8V		
Ant. Pol.	Horizontal		
Test Mode:	TX 802.11a Mode 5280MHz (U-NII-2A)		
Remark:	No report for the emission which more than 10 dB below the prescribed limit.		

No.	Mk.	Freq.	Reading Level	Correct Factor	Measure-ment	Limit	Over	
		MHz	dBm	dB	dBm	dBm	dB	Detector
1		10560.85	28.99	20.78	49.77	68.30	-18.53	peak
2	*	10560.85	20.70	20.78	41.48	54.00	-12.52	AVG

Emission Level= Read Level+ Correct Factor

Temperature:	25 ℃	**Relative Humidity:**	55%
Test Voltage:	DC 3.8V		
Ant. Pol.	Vertical		
Test Mode:	TX 802.11a Mode 5280MHz (U-NII-2A)		
Remark:	No report for the emission which more than 10 dB below the prescribed limit.		

No.	Mk.	Freq.	Reading Level	Correct Factor	Measure-ment	Limit	Over	
		MHz	dBm	dB	dBm	dBm	dB	Detector
1		10560.25	29.37	20.78	50.15	68.30	-18.15	peak
2	*	10560.25	21.04	20.78	41.82	54.00	-12.18	AVG

Emission Level= Read Level+ Correct Factor

Temperature:	25 ℃	**Relative Humidity:**	55%
Test Voltage:	DC 3.8V		
Ant. Pol.	Horizontal		
Test Mode:	TX 802.11a Mode 5320MHz (U-NII-2A)		
Remark:	No report for the emission which more than 10 dB below the prescribed limit.		

No.	Mk.	Freq.	Reading Level	Correct Factor	Measure-ment	Limit	Over	
		MHz	dBm	dB	dBm	dBm	dB	Detector
1		10640.25	29.35	20.88	50.23	68.30	-18.07	peak
2	*	10640.25	19.25	20.88	40.13	54.00	-13.87	AVG

Emission Level= Read Level+ Correct Factor

Temperature:	25 ℃	**Relative Humidity:**	55%
Test Voltage:	DC 3.8V		
Ant. Pol.	Vertical		
Test Mode:	TX 802.11a Mode 5320MHz (U-NII-2A)		
Remark:	No report for the emission which more than 10 dB below the prescribed limit.		

No.	Mk.	Freq.	Reading Level	Correct Factor	Measure-ment	Limit	Over	
		MHz	dBm	dB	dBm	dBm	dB	Detector
1		10640.28	29.37	20.88	50.25	68.30	-18.05	peak
2	*	10640.28	20.14	20.88	41.02	54.00	-12.98	AVG

Emission Level= Read Level+ Correct Factor

Temperature:	25 ℃	**Relative Humidity:**	55%
Test Voltage:	DC 3.8V		
Ant. Pol.	Horizontal		
Test Mode:	TX 802.11n(HT20) Mode 5260MHz (U-NII-2A)		
Remark:	No report for the emission which more than 10 dB below the prescribed limit.		

No.	Mk.	Freq.	Reading Level	Correct Factor	Measure-ment	Limit	Over	
		MHz	dBm	dB	dBm	dBm	dB	Detector
1		10520.35	30.68	20.73	51.41	68.30	-16.89	peak
2	*	10520.35	22.54	20.73	43.27	54.00	-10.73	AVG

Emission Level= Read Level+ Correct Factor

Temperature:	25 ℃	**Relative Humidity:**	55%
Test Voltage:	DC 3.8V		
Ant. Pol.	Vertical		
Test Mode:	TX 802.11n(HT20) Mode 5260MHz (U-NII-2A)		
Remark:	No report for the emission which more than 10 dB below the prescribed limit.		

No.	Mk.	Freq.	Reading Level	Correct Factor	Measure-ment	Limit	Over	
		MHz	dBm	dB	dBm	dBm	dB	Detector
1		10520.35	29.84	20.73	50.57	68.30	-17.73	peak
2	*	10520.35	20.14	20.73	40.87	54.00	-13.13	AVG

Emission Level= Read Level+ Correct Factor

Temperature:	25 ℃	**Relative Humidity:**	55%
Test Voltage:	DC 3.8V		
Ant. Pol.	Horizontal		
Test Mode:	TX 802.11n(HT20) Mode 5280MHz (U-NII-2A)		
Remark:	No report for the emission which more than 10 dB below the prescribed limit.		

No.	Mk.	Freq.	Reading Level	Correct Factor	Measure-ment	Limit	Over	
		MHz	dBm	dB	dBm	dBm	dB	Detector
1		10560.56	30.14	20.78	50.92	68.30	-17.38	peak
2	*	10560.56	21.05	20.78	41.83	54.00	-12.17	AVG

Emission Level= Read Level+ Correct Factor

Temperature:	25 ℃	**Relative Humidity:**	55%
Test Voltage:	DC 3.8V		
Ant. Pol.	Vertical		
Test Mode:	TX 802.11n(HT20) Mode 5280MHz (U-NII-2A)		
Remark:	No report for the emission which more than 10 dB below the prescribed limit.		

No.	Mk.	Freq.	Reading Level	Correct Factor	Measure-ment	Limit	Over	
		MHz	dBm	dB	dBm	dBm	dB	Detector
1		10560.70	29.34	20.78	50.12	68.30	-18.18	peak
2	*	10560.70	21.54	20.78	42.32	54.00	-11.68	AVG

Emission Level= Read Level+ Correct Factor

Temperature:	25 ℃	**Relative Humidity:**	55%
Test Voltage:	DC 3.8V		
Ant. Pol.	Horizontal		
Test Mode:	TX 802.11n(HT20) Mode 5320MHz (U-NII-2A)		
Remark:	No report for the emission which more than 10 dB below the prescribed limit.		

No.	Mk.	Freq.	Reading Level	Correct Factor	Measure-ment	Limit	Over	
		MHz	dBm	dB	dBm	dBm	dB	Detector
1		10640.52	29.74	20.88	50.62	68.30	-17.68	peak
2	*	10640.52	22.57	20.88	43.45	54.00	-10.55	AVG

Emission Level= Read Level+ Correct Factor

Temperature:	25 ℃	**Relative Humidity:**	55%
Test Voltage:	DC 3.8V		
Ant. Pol.	Vertical		
Test Mode:	TX 802.11n(HT20) Mode 5320MHz (U-NII-2A)		
Remark:	No report for the emission which more than 10 dB below the prescribed limit.		

No.	Mk.	Freq.	Reading Level	Correct Factor	Measure-ment	Limit	Over	
		MHz	dBm	dB	dBm	dBm	dB	Detector
1		10640.52	30.24	20.88	51.12	68.30	-17.18	peak
2	*	10640.52	20.87	20.88	41.75	54.00	-12.25	AVG

Emission Level= Read Level+ Correct Factor

Temperature:	25 ℃	**Relative Humidity:**	55%
Test Voltage:	DC 3.8V		
Ant. Pol.	Horizontal		
Test Mode:	TX 802.11ac(VHT20) Mode 5260MHz (U-NII-2A)		
Remark:	No report for the emission which more than 10 dB below the prescribed limit.		

No.	Mk.	Freq.	Reading Level	Correct Factor	Measure-ment	Limit	Over	
		MHz	dBm	dB	dBm	dBm	dB	Detector
1		10520.70	30.25	20.73	50.98	68.30	-17.32	peak
2	*	10520.70	21.42	20.73	42.15	54.00	-11.85	AVG

Emission Level= Read Level+ Correct Factor

Temperature:	25 ℃	**Relative Humidity:**	55%
Test Voltage:	DC 3.8V		
Ant. Pol.	Vertical		
Test Mode:	TX 802.11ac(VHT20) Mode 5260MHz (U-NII-2A)		
Remark:	No report for the emission which more than 10 dB below the prescribed limit.		

No.	Mk.	Freq.	Reading Level	Correct Factor	Measure-ment	Limit	Over	
		MHz	dBm	dB	dBm	dBm	dB	Detector
1		10520.46	29.68	20.73	50.41	68.30	-17.89	peak
2	*	10520.46	20.67	20.73	41.40	54.00	-12.60	AVG

Emission Level= Read Level+ Correct Factor

Temperature:	25 ℃	**Relative Humidity:**	55%
Test Voltage:	DC 3.8V		
Ant. Pol.	Horizontal		
Test Mode:	TX 802.11ac(VHT20) Mode 5280MHz (U-NII-2A)		
Remark:	No report for the emission which more than 10 dB below the prescribed limit.		

No.	Mk.	Freq.	Reading Level	Correct Factor	Measure-ment	Limit	Over	
		MHz	dBm	dB	dBm	dBm	dB	Detector
1		10560.43	30.41	20.78	51.19	68.30	-17.11	peak
2	*	10560.49	21.00	20.78	41.78	54.00	-12.22	AVG

Emission Level= Read Level+ Correct Factor

Temperature:	25 ℃	**Relative Humidity:**	55%
Test Voltage:	DC 3.8V		
Ant. Pol.	Vertical		
Test Mode:	TX 802.11ac(VHT20) Mode 5280MHz (U-NII-2A)		
Remark:	No report for the emission which more than 10 dB below the prescribed limit.		

No.	Mk.	Freq.	Reading Level	Correct Factor	Measure-ment	Limit	Over	
		MHz	dBm	dB	dBm	dBm	dB	Detector
1		10560.65	29.99	20.78	50.77	68.30	-17.53	peak
2	*	10560.65	21.41	20.78	42.19	54.00	-11.81	AVG

Emission Level= Read Level+ Correct Factor

Temperature:	25 ℃	**Relative Humidity:**	55%
Test Voltage:	DC 3.8V		
Ant. Pol.	Horizontal		
Test Mode:	TX 802.11 ac(VHT20) Mode 5320MHz (U-NII-2A)		
Remark:	No report for the emission which more than 10 dB below the prescribed limit.		

No.	Mk.	Freq.	Reading Level	Correct Factor	Measure-ment	Limit	Over	
		MHz	dBm	dB	dBm	dBm	dB	Detector
1	*	10640.58	21.55	20.88	42.43	54.00	-11.57	AVG
2		10640.58	29.85	20.88	50.73	68.30	-17.57	peak

Emission Level= Read Level+ Correct Factor

Temperature:	25 ℃	**Relative Humidity:**	55%
Test Voltage:	DC 3.8V		
Ant. Pol.	Vertical		
Test Mode:	TX 802.11ac(VHT20) Mode 5320MHz (U-NII-2A)		
Remark:	No report for the emission which more than 10 dB below the prescribed limit.		

No.	Mk.	Freq.	Reading Level	Correct Factor	Measure-ment	Limit	Over	
		MHz	dBm	dB	dBm	dBm	dB	Detector
1		10640.72	29.74	20.88	50.62	68.30	-17.68	peak
2	*	10640.72	19.35	20.88	40.23	54.00	-13.77	AVG

Emission Level= Read Level+ Correct Factor

Temperature:	25 ℃	**Relative Humidity:**	55%
Test Voltage:	DC 3.8V		
Ant. Pol.	Horizontal		
Test Mode:	TX 802.11n(HT40) Mode 5270MHz (U-NII-2A)		
Remark:	No report for the emission which more than 10 dB below the prescribed limit.		

No.	Mk.	Freq.	Reading Level	Correct Factor	Measure-ment	Limit	Over	
		MHz	dBm	dB	dBm	dBm	dB	Detector
1		10540.56	30.12	20.75	50.87	68.30	-17.43	peak
2	*	10540.59	21.03	20.75	41.78	54.00	-12.22	AVG

Emission Level= Read Level+ Correct Factor

Temperature:	25 ℃	**Relative Humidity:**	55%
Test Voltage:	DC 3.8V		
Ant. Pol.	Vertical		
Test Mode:	TX 802.11n(HT40) Mode 5270MHz (U-NII-2A)		
Remark:	No report for the emission which more than 10 dB below the prescribed limit.		

No.	Mk.	Freq.	Reading Level	Correct Factor	Measure-ment	Limit	Over	
		MHz	dBm	dB	dBm	dBm	dB	Detector
1		10540.55	29.38	20.75	50.13	68.30	-18.17	peak
2	*	10540.55	21.42	20.75	42.17	54.00	-11.83	AVG

Emission Level= Read Level+ Correct Factor

Temperature:	25 ℃	**Relative Humidity:**	55%
Test Voltage:	DC 3.8V		
Ant. Pol.	Horizontal		
Test Mode:	TX 802.11n(HT40) Mode 5310MHz (U-NII-2A)		
Remark:	No report for the emission which more than 10 dB below the prescribed limit.		

No.	Mk.	Freq.	Reading Level	Correct Factor	Measure-ment	Limit	Over	
		MHz	dBm	dB	dBm	dBm	dB	Detector
1		10620.75	30.52	20.86	51.38	68.30	-16.92	peak
2	*	10620.75	21.58	20.86	42.44	54.00	-11.56	AVG

Emission Level= Read Level+ Correct Factor

Temperature:	25 ℃	**Relative Humidity:**	55%
Test Voltage:	DC 3.8V		
Ant. Pol.	Vertical		
Test Mode:	TX 802.11n(HT40) Mode 5310MHz (U-NII-2A)		
Remark:	No report for the emission which more than 10 dB below the prescribed limit.		

No.	Mk.	Freq.	Reading Level	Correct Factor	Measure-ment	Limit	Over	
		MHz	dBm	dB	dBm	dBm	dB	Detector
1		10620.88	30.85	20.86	51.71	68.30	-16.59	peak
2	*	10620.88	22.14	20.86	43.00	54.00	-11.00	AVG

Emission Level= Read Level+ Correct Factor

Temperature:	25 ℃	**Relative Humidity:**	55%
Test Voltage:	DC 3.8V		
Ant. Pol.	Horizontal		
Test Mode:	TX 802.11ac(VHT40) Mode 5270MHz (U-NII-2A)		
Remark:	No report for the emission which more than 10 dB below the prescribed limit.		

No.	Mk.	Freq.	Reading Level	Correct Factor	Measure-ment	Limit	Over	
		MHz	dBm	dB	dBm	dBm	dB	Detector
1		10540.33	29.58	20.75	50.33	68.30	-17.97	peak
2	*	10540.33	19.87	20.75	40.62	54.00	-13.38	AVG

Emission Level= Read Level+ Correct Factor

Temperature:	25 ℃	**Relative Humidity:**	55%
Test Voltage:	DC 3.8V		
Ant. Pol.	Vertical		
Test Mode:	TX 802.11ac(VHT40) Mode 5270MHz (U-NII-2A)		
Remark:	No report for the emission which more than 10 dB below the prescribed limit.		

No.	Mk.	Freq.	Reading Level	Correct Factor	Measure-ment	Limit	Over	
		MHz	dBm	dB	dBm	dBm	dB	Detector
1		10540.63	28.96	20.75	49.71	68.30	-18.59	peak
2	*	10540.63	19.57	20.75	40.32	54.00	-13.68	AVG

Emission Level= Read Level+ Correct Factor

Temperature:	25 ℃	**Relative Humidity:**	55%
Test Voltage:	DC 3.8V		
Ant. Pol.	Horizontal		
Test Mode:	TX 802.11ac(VHT40) Mode 5310MHz (U-NII-2A)		
Remark:	No report for the emission which more than 10 dB below the prescribed limit.		

No.	Mk.	Freq.	Reading Level	Correct Factor	Measure-ment	Limit	Over	
		MHz	dBm	dB	dBm	dBm	dB	Detector
1		10540.72	29.44	20.75	50.19	68.30	-18.11	peak
2	*	10540.72	20.45	20.75	41.20	54.00	-12.80	AVG

Emission Level= Read Level+ Correct Factor

Temperature:	25 ℃	**Relative Humidity:**	55%
Test Voltage:	DC 3.8V		
Ant. Pol.	Vertical		
Test Mode:	TX 802.11ac(VHT40) Mode 5310MHz (U-NII-2A)		
Remark:	No report for the emission which more than 10 dB below the prescribed limit.		

No.	Mk.	Freq.	Reading Level	Correct Factor	Measure-ment	Limit	Over	
		MHz	dBm	dB	dBm	dBm	dB	Detector
1		10540.58	30.74	20.75	51.49	68.30	-16.81	peak
2	*	10540.58	20.89	20.75	41.64	54.00	-12.36	AVG

Emission Level= Read Level+ Correct Factor

Temperature:	25 ℃	**Relative Humidity:**	55%
Test Voltage:	DC 3.8V		
Ant. Pol.	Horizontal		
Test Mode:	TX 802.11ac(VHT80) Mode 5290MHz (U-NII-2A)		
Remark:	No report for the emission which more than 10 dB below the prescribed limit.		

No.	Mk.	Freq.	Reading Level	Correct Factor	Measure-ment	Limit	Over	
		MHz	dBm	dB	dBm	dBm	dB	Detector
1		10580.56	29.45	20.80	50.25	68.30	-18.05	peak
2	*	10580.56	20.23	20.80	41.03	54.00	-12.97	AVG

Emission Level= Read Level+ Correct Factor

Temperature:	25 ℃	**Relative Humidity:**	55%
Test Voltage:	DC 3.8V		
Ant. Pol.	Vertical		
Test Mode:	TX 802.11ac(VHT80) Mode 5290MHz (U-NII-2A)		
Remark:	No report for the emission which more than 10 dB below the prescribed limit.		

No.	Mk.	Freq.	Reading Level	Correct Factor	Measure-ment	Limit	Over	
		MHz	dBm	dB	dBm	dBm	dB	Detector
1		10580.76	30.45	20.80	51.25	68.30	-17.05	peak
2	*	10580.76	20.33	20.80	41.13	54.00	-12.87	AVG

Emission Level= Read Level+ Correct Factor

5500MHz-5720MHz(U-NII-2C)

Temperature:	25 ℃	**Relative Humidity:**	55%
Test Voltage:	DC 3.8V		
Ant. Pol.	Horizontal		
Test Mode:	TX 802.11a Mode 5500MHz (U-NII-2C)		
Remark:	No report for the emission which more than 10 dB below the prescribed limit.		

No.	Mk.	Freq.	Reading Level	Correct Factor	Measure-ment	Limit	Over	
		MHz	dBm	dB	dBm	dBm	dB	Detector
1		11000.520	28.34	21.33	49.67	68.30	-18.63	peak
2	*	11000.520	18.96	21.33	40.29	54.00	-13.71	AVG

Emission Level= Read Level+ Correct Factor

Temperature:	25 ℃	**Relative Humidity:**	55%
Test Voltage:	DC 3.8V		
Ant. Pol.	Vertical		
Test Mode:	TX 802.11a Mode 5500MHz (U-NII-2C)		
Remark:	No report for the emission which more than 10 dB below the prescribed limit.		

No.	Mk.	Freq.	Reading Level	Correct Factor	Measure-ment	Limit	Over	
		MHz	dBm	dB	dBm	dBm	dB	Detector
1		11000.800	28.47	21.33	49.80	68.30	-18.50	peak
2	*	11000.800	19.22	21.33	40.55	54.00	-13.45	AVG

Emission Level= Read Level+ Correct Factor

Temperature:	25 ℃	**Relative Humidity:**	55%
Test Voltage:	DC 3.8V		
Ant. Pol.	Horizontal		
Test Mode:	TX 802.11a Mode 5600MHz (U-NII-2C)		
Remark:	No report for the emission which more than 10 dB below the prescribed limit.		

No.	Mk.	Freq.	Reading Level	Correct Factor	Measure-ment	Limit	Over	
		MHz	dBm	dB	dBm	dBm	dB	Detector
1		11200.580	27.96	21.52	49.48	68.30	-18.82	peak
2	*	11200.580	18.25	21.52	39.77	54.00	-14.23	AVG

Emission Level= Read Level+ Correct Factor

Temperature:	25 ℃	**Relative Humidity:**	55%
Test Voltage:	DC 3.8V		
Ant. Pol.	Vertical		
Test Mode:	TX 802.11a Mode 5600MHz (U-NII-2C)		
Remark:	No report for the emission which more than 10 dB below the prescribed limit.		

No.	Mk.	Freq.	Reading Level	Correct Factor	Measure-ment	Limit	Over	
		MHz	dBm	dB	dBm	dBm	dB	Detector
1		11200.700	28.14	21.52	49.66	68.30	-18.64	peak
2	*	11200.700	19.24	21.52	40.76	54.00	-13.24	AVG

Emission Level= Read Level+ Correct Factor

Temperature:	25 ℃	**Relative Humidity:**	55%
Test Voltage:	DC 3.8V		
Ant. Pol.	Horizontal		
Test Mode:	TX 802.11a Mode 5700MHz (U-NII-2C)		
Remark:	No report for the emission which more than 10 dB below the prescribed limit.		

No.	Mk.	Freq.	Reading Level	Correct Factor	Measure-ment	Limit	Over	
		MHz	dBm	dB	dBm	dBm	dB	Detector
1		11400.500	28.05	21.76	49.81	68.30	-18.49	peak
2	*	11400.500	19.87	21.76	41.63	54.00	-12.37	AVG

Emission Level= Read Level+ Correct Factor

Temperature:	25 ℃	**Relative Humidity:**	55%
Test Voltage:	DC 3.8V		
Ant. Pol.	Vertical		
Test Mode:	TX 802.11a Mode 5700MHz (U-NII-2C)		
Remark:	No report for the emission which more than 10 dB below the prescribed limit.		

No.	Mk.	Freq.	Reading Level	Correct Factor	Measure-ment	Limit	Over	
		MHz	dBm	dB	dBm	dBm	dB	Detector
1		11400.680	27.89	21.76	49.65	68.30	-18.65	peak
2	*	11400.680	19.87	21.76	41.63	54.00	-12.37	AVG

Emission Level= Read Level+ Correct Factor

Temperature:	25 ℃	**Relative Humidity:**	55%
Test Voltage:	DC 3.8V		
Ant. Pol.	Horizontal		
Test Mode:	TX 802.11n(HT20) Mode 5500MHz (U-NII-2C)		
Remark:	No report for the emission which more than 10 dB below the prescribed limit.		

No.	Mk.	Freq.	Reading Level	Correct Factor	Measure-ment	Limit	Over	
		MHz	dBm	dB	dBm	dBm	dB	Detector
1		11000.560	28.42	21.33	49.75	68.30	-18.55	peak
2	*	11000.560	19.25	21.33	40.58	54.00	-13.42	AVG

Emission Level= Read Level+ Correct Factor

Temperature:	25 ℃	**Relative Humidity:**	55%
Test Voltage:	DC 3.8V		
Ant. Pol.	Vertical		
Test Mode:	TX 802.11 n(HT20) Mode 5500MHz (U-NII-2C)		
Remark:	No report for the emission which more than 10 dB below the prescribed limit.		

No.	Mk.	Freq.	Reading Level	Correct Factor	Measure-ment	Limit	Over	
		MHz	dBm	dB	dBm	dBm	dB	Detector
1		11000.560	28.42	21.33	49.75	68.30	-18.55	peak
2	*	11000.560	19.25	21.33	40.58	54.00	-13.42	AVG

Emission Level= Read Level+ Correct Factor

Temperature:	25 ℃	**Relative Humidity:**	55%
Test Voltage:	DC 3.8V		
Ant. Pol.	Horizontal		
Test Mode:	TX 802.11n(HT20) Mode 5500MHz (U-NII-2C)		
Remark:	No report for the emission which more than 10 dB below the prescribed limit.		

No.	Mk.	Freq.	Reading Level	Correct Factor	Measure-ment	Limit	Over	
		MHz	dBm	dB	dBm	dBm	dB	Detector
1		11200.650	29.44	21.52	50.96	68.30	-17.34	peak
2	*	11200.650	20.74	21.52	42.26	54.00	-11.74	AVG

Emission Level= Read Level+ Correct Factor

Temperature:	25 ℃	**Relative Humidity:**	55%
Test Voltage:	DC 3.8V		
Ant. Pol.	Vertical		
Test Mode:	TX 802.11n(HT20) Mode 5600MHz (U-NII-2C)		
Remark:	No report for the emission which more than 10 dB below the prescribed limit.		

No.	Mk.	Freq.	Reading Level	Correct Factor	Measure-ment	Limit	Over	
		MHz	dBm	dB	dBm	dBm	dB	Detector
1		11200.400	28.37	21.52	49.89	68.30	-18.41	peak
2	*	11200.400	19.57	21.52	41.09	54.00	-12.91	AVG

Emission Level= Read Level+ Correct Factor

Temperature:	25 ℃	**Relative Humidity:**	55%
Test Voltage:	DC 3.8V		
Ant. Pol.	Horizontal		
Test Mode:	TX 802.11n(HT20) Mode 5700MHz (U-NII-2C)		
Remark:	No report for the emission which more than 10 dB below the prescribed limit.		

No.	Mk.	Freq.	Reading Level	Correct Factor	Measure-ment	Limit	Over	
		MHz	dBm	dB	dBm	dBm	dB	Detector
1		11400.520	28.63	21.76	50.39	68.30	-17.91	peak
2	*	11400.520	19.47	21.76	41.23	54.00	-12.77	AVG

Emission Level= Read Level+ Correct Factor

Temperature:	25 ℃	**Relative Humidity:**	55%
Test Voltage:	DC 3.8V		
Ant. Pol.	Vertical		
Test Mode:	TX 802.11n(HT20) Mode 5700MHz (U-NII-2C)		
Remark:	No report for the emission which more than 10 dB below the prescribed limit.		

No.	Mk.	Freq.	Reading Level	Correct Factor	Measure-ment	Limit	Over	
		MHz	dBm	dB	dBm	dBm	dB	Detector
1		11400.870	28.10	21.76	49.86	68.30	-18.44	peak
2	*	11400.870	18.69	21.76	40.45	54.00	-13.55	AVG

Emission Level= Read Level+ Correct Factor

Temperature:	25 ℃	**Relative Humidity:**	55%
Test Voltage:	DC 3.8V		
Ant. Pol.	Horizontal		
Test Mode:	TX 802.11ac(VHT20) Mode 5500MHz (U-NII-2C)		
Remark:	No report for the emission which more than 10 dB below the prescribed limit.		

No.	Mk.	Freq.	Reading Level	Correct Factor	Measure-ment	Limit	Over	
		MHz	dBm	dB	dBm	dBm	dB	Detector
1		11000.520	28.15	21.33	49.48	68.30	-18.82	peak
2	*	11000.520	19.38	21.33	40.71	54.00	-13.29	AVG

Emission Level= Read Level+ Correct Factor

Temperature:	25 ℃	**Relative Humidity:**	55%
Test Voltage:	DC 3.8V		
Ant. Pol.	Vertical		
Test Mode:	TX 802.11 ac(VHT20) Mode 5500MHz (U-NII-2C)		
Remark:	No report for the emission which more than 10 dB below the prescribed limit.		

No.	Mk.	Freq.	Reading Level	Correct Factor	Measure-ment	Limit	Over	
		MHz	dBm	dB	dBm	dBm	dB	Detector
1		11000.760	29.15	21.33	50.48	68.30	-17.82	peak
2	*	11000.760	19.88	21.33	41.21	54.00	-12.79	AVG

Emission Level= Read Level+ Correct Factor

Temperature:	25 ℃	**Relative Humidity:**	55%
Test Voltage:	DC 3.8V		
Ant. Pol.	Horizontal		
Test Mode:	TX 802.11 ac(VHT20) Mode 5600MHz (U-NII-2C)		
Remark:	No report for the emission which more than 10 dB below the prescribed limit.		

No.	Mk.	Freq.	Reading Level	Correct Factor	Measure-ment	Limit	Over	
		MHz	dBm	dB	dBm	dBm	dB	Detector
1		11200.850	28.99	21.52	50.51	68.30	-17.79	peak
2	*	11200.850	20.71	21.52	42.23	54.00	-11.77	AVG

Emission Level= Read Level+ Correct Factor

Temperature:	25 ℃	**Relative Humidity:**	55%
Test Voltage:	DC 3.8V		
Ant. Pol.	Vertical		
Test Mode:	TX 802.11 ac(VHT20) Mode 5600MHz (U-NII-2C)		
Remark:	No report for the emission which more than 10 dB below the prescribed limit.		

No.	Mk.	Freq.	Reading Level	Correct Factor	Measure-ment	Limit	Over	
		MHz	dBm	dB	dBm	dBm	dB	Detector
1		11200.570	28.15	21.52	49.67	68.30	-18.63	peak
2	*	11200.570	19.99	21.52	41.51	54.00	-12.49	AVG

Emission Level= Read Level+ Correct Factor

Temperature:	25 ℃	**Relative Humidity:**	55%
Test Voltage:	DC 3.8V		
Ant. Pol.	Horizontal		
Test Mode:	TX 802.11 ac(VHT20) Mode 5700MHz (U-NII-2C)		
Remark:	No report for the emission which more than 10 dB below the prescribed limit.		

No.	Mk.	Freq.	Reading Level	Correct Factor	Measure-ment	Limit	Over	
		MHz	dBm	dB	dBm	dBm	dB	Detector
1		11400.500	28.53	21.72	50.25	68.30	-18.05	peak
2	*	11400.500	19.25	21.72	40.97	54.00	-13.03	AVG

Emission Level= Read Level+ Correct Factor

Temperature:	25 ℃	**Relative Humidity:**	55%
Test Voltage:	DC 3.8V		
Ant. Pol.	Vertical		
Test Mode:	TX 802.11 ac(VHT20) Mode 5700MHz (U-NII-2C)		
Remark:	No report for the emission which more than 10 dB below the prescribed limit.		

No.	Mk.	Freq.	Reading Level	Correct Factor	Measure-ment	Limit	Over	
		MHz	dBm	dB	dBm	dBm	dB	Detector
1		11400.320	29.54	21.72	51.26	68.30	-17.04	peak
2	*	11400.320	19.88	21.72	41.60	54.00	-12.40	AVG

Emission Level= Read Level+ Correct Factor

Temperature:	25 ℃	**Relative Humidity:**	55%
Test Voltage:	DC 3.8V		
Ant. Pol.	Horizontal		
Test Mode:	TX 802.11n(HT40) Mode 5510MHz (U-NII-2C)		
Remark:	No report for the emission which more than 10 dB below the prescribed limit.		

No.	Mk.	Freq.	Reading Level	Correct Factor	Measure-ment	Limit	Over	
		MHz	dBm	dB	dBm	dBm	dB	Detector
1		11020.500	28.34	21.35	49.69	68.30	-18.61	peak
2	*	11020.500	19.06	21.35	40.41	54.00	-13.59	AVG

Emission Level= Read Level+ Correct Factor

Temperature:	25 ℃	**Relative Humidity:**	55%
Test Voltage:	DC 3.8V		
Ant. Pol.	Vertical		
Test Mode:	TX 802.11n(HT40) Mode 5510MHz (U-NII-2C)		
Remark:	No report for the emission which more than 10 dB below the prescribed limit.		

No.	Mk.	Freq.	Reading Level	Correct Factor	Measure-ment	Limit	Over	
		MHz	dBm	dB	dBm	dBm	dB	Detector
1		11020.580	28.35	21.35	49.70	68.30	-18.60	peak
2	*	11020.580	19.22	21.35	40.57	54.00	-13.43	AVG

Emission Level= Read Level+ Correct Factor

Temperature:	25 ℃	**Relative Humidity:**	55%
Test Voltage:	DC 3.8V		
Ant. Pol.	Horizontal		
Test Mode:	TX 802.11n(HT40) Mode 5590MHz (U-NII-2C)		
Remark:	No report for the emission which more than 10 dB below the prescribed limit.		

No.	Mk.	Freq.	Reading Level	Correct Factor	Measure-ment	Limit	Over	
		MHz	dBm	dB	dBm	dBm	dB	Detector
1		11180.250	29.00	21.51	50.51	68.30	-17.79	peak
2	*	11180.250	19.87	21.51	41.38	54.00	-12.62	AVG

Emission Level= Read Level+ Correct Factor

Temperature:	25 ℃	**Relative Humidity:**	55%
Test Voltage:	DC 3.8V		
Ant. Pol.	Vertical		
Test Mode:	TX 802.11n(HT40) Mode 5590MHz (U-NII-2C)		
Remark:	No report for the emission which more than 10 dB below the prescribed limit.		

No.	Mk.	Freq.	Reading Level	Correct Factor	Measure-ment	Limit	Over	
		MHz	dBm	dB	dBm	dBm	dB	Detector
1		11180.300	28.77	21.51	50.28	68.30	-18.02	peak
2	*	11180.300	20.11	21.51	41.62	54.00	-12.38	AVG

Emission Level= Read Level+ Correct Factor

Temperature:	25 ℃	**Relative Humidity:**	55%
Test Voltage:	DC 3.8V		
Ant. Pol.	Horizontal		
Test Mode:	TX 802.11n(HT40) Mode 5670MHz (U-NII-2C)		
Remark:	No report for the emission which more than 10 dB below the prescribed limit.		

No.	Mk.	Freq.	Reading Level	Correct Factor	Measure-ment	Limit	Over	
		MHz	dBm	dB	dBm	dBm	dB	Detector
1		11340.870	28.36	21.73	50.09	68.30	-18.21	peak
2	*	11340.870	19.68	21.73	41.41	54.00	-12.59	AVG

Emission Level= Read Level+ Correct Factor

Temperature:	25 ℃	**Relative Humidity:**	55%
Test Voltage:	DC 3.8V		
Ant. Pol.	Vertical		
Test Mode:	TX 802.11n(HT40) Mode 5670MHz (U-NII-2C)		
Remark:	No report for the emission which more than 10 dB below the prescribed limit.		

No.	Mk.	Freq.	Reading Level	Correct Factor	Measure-ment	Limit	Over	
		MHz	dBm	dB	dBm	dBm	dB	Detector
1		11340.880	28.37	21.73	50.10	68.30	-18.20	peak
2	*	11340.880	20.34	21.73	42.07	54.00	-11.93	AVG

Emission Level= Read Level+ Correct Factor

Temperature:	25 ℃	**Relative Humidity:**	55%
Test Voltage:	DC 3.8V		
Ant. Pol.	Horizontal		
Test Mode:	TX 802.11ac(VHT40) Mode 5510MHz (U-NII-2C)		
Remark:	No report for the emission which more than 10 dB below the prescribed limit.		

No.	Mk.	Freq.	Reading Level	Correct Factor	Measure-ment	Limit	Over	
		MHz	dBm	dB	dBm	dBm	dB	Detector
1		11020.740	29.24	21.35	50.59	68.30	-17.71	peak
2	*	11020.740	20.36	21.35	41.71	54.00	-12.29	AVG

Emission Level= Read Level+ Correct Factor

Temperature:	25 ℃	**Relative Humidity:**	55%
Test Voltage:	DC 3.8V		
Ant. Pol.	Vertical		
Test Mode:	TX 802.11ac(VHT40) Mode 5510MHz (U-NII-2C)		
Remark:	No report for the emission which more than 10 dB below the prescribed limit.		

No.	Mk.	Freq.	Reading Level	Correct Factor	Measure-ment	Limit	Over	
		MHz	dBm	dB	dBm	dBm	dB	Detector
1		11020.860	29.74	21.35	51.09	68.30	-17.21	peak
2	*	11020.860	21.23	21.35	42.58	54.00	-11.42	AVG

Emission Level= Read Level+ Correct Factor

Temperature:	25 ℃	**Relative Humidity:**	55%
Test Voltage:	DC 3.8V		
Ant. Pol.	Horizontal		
Test Mode:	TX 802.11ac(VHT40) Mode 5590MHz (U-NII-2C)		
Remark:	No report for the emission which more than 10 dB below the prescribed limit.		

No.	Mk.	Freq.	Reading Level	Correct Factor	Measure-ment	Limit	Over	
		MHz	dBm	dB	dBm	dBm	dB	Detector
1		11180.850	28.66	21.51	50.17	68.30	-18.13	peak
2	*	11180.850	20.34	21.51	41.85	54.00	-12.15	AVG

Emission Level= Read Level+ Correct Factor

Temperature:	25 ℃	**Relative Humidity:**	55%
Test Voltage:	DC 3.8V		
Ant. Pol.	Vertical		
Test Mode:	TX 802.11ac(VHT40) Mode 5590MHz (U-NII-2C)		
Remark:	No report for the emission which more than 10 dB below the prescribed limit.		

No.	Mk.	Freq.	Reading Level	Correct Factor	Measure-ment	Limit	Over	
		MHz	dBm	dB	dBm	dBm	dB	Detector
1		11180.200	28.67	21.51	50.18	68.30	-18.12	peak
2	*	11180.200	20.33	21.51	41.84	54.00	-12.16	AVG

Emission Level= Read Level+ Correct Factor

Temperature:	25 ℃	**Relative Humidity:**	55%
Test Voltage:	DC 3.8V		
Ant. Pol.	Horizontal		
Test Mode:	TX 802.11ac(VHT40) Mode 5670MHz (U-NII-2C)		
Remark:	No report for the emission which more than 10 dB below the prescribed limit.		

No.	Mk.	Freq.	Reading Level	Correct Factor	Measure-ment	Limit	Over	
		MHz	dBm	dB	dBm	dBm	dB	Detector
1		11340.520	28.37	21.73	50.10	68.30	-18.20	peak
2	*	11340.520	20.16	21.73	41.89	54.00	-12.11	AVG

Emission Level= Read Level+ Correct Factor

Temperature:	25 ℃	Relative Humidity:	55%
Test Voltage:	DC 3.8V		
Ant. Pol.	Vertical		
Test Mode:	TX 802.11ac(VHT40) Mode 5670MHz (U-NII-2C)		
Remark:	No report for the emission which more than 10 dB below the prescribed limit.		

No.	Mk.	Freq.	Reading Level	Correct Factor	Measure-ment	Limit	Over	
		MHz	dBm	dB	dBm	dBm	dB	Detector
1		11340.260	28.47	21.73	50.20	68.30	-18.10	peak
2	*	11340.260	21.11	21.73	42.84	54.00	-11.16	AVG

Emission Level= Read Level+ Correct Factor

Temperature:	25 ℃	**Relative Humidity:**	55%
Test Voltage:	DC 3.8V		
Ant. Pol.	Horizontal		
Test Mode:	TX 802.11ac(VHT80) Mode 5530MHz (U-NII-2C)		
Remark:	No report for the emission which more than 10 dB below the prescribed limit.		

No.	Mk.	Freq.	Reading Level	Correct Factor	Measure-ment	Limit	Over	
		MHz	dBm	dB	dBm	dBm	dB	Detector
1		11060.570	29.33	21.39	50.72	68.30	-17.58	peak
2	*	11060.570	20.74	21.39	42.13	54.00	-11.87	AVG

Emission Level= Read Level+ Correct Factor

Temperature:	25 ℃	**Relative Humidity:**	55%
Test Voltage:	DC 3.8V		
Ant. Pol.	Vertical		
Test Mode:	TX 802.11ac(VHT80) Mode 5530MHz (U-NII-2C)		
Remark:	No report for the emission which more than 10 dB below the prescribed limit.		

No.	Mk.	Freq.	Reading Level	Correct Factor	Measure-ment	Limit	Over	
		MHz	dBm	dB	dBm	dBm	dB	Detector
1		11060.350	28.39	21.39	49.78	68.30	-18.52	peak
2	*	11060.350	19.88	21.39	41.27	54.00	-12.73	AVG

Emission Level= Read Level+ Correct Factor

Temperature:	25 ℃	**Relative Humidity:**	55%
Test Voltage:	DC 3.8V		
Ant. Pol.	Horizontal		
Test Mode:	TX 802.11ac(VHT80) Mode 5610MHz (U-NII-2C)		
Remark:	No report for the emission which more than 10 dB below the prescribed limit.		

No.	Mk.	Freq.	Reading Level	Correct Factor	Measure-ment	Limit	Over	
		MHz	dBm	dB	dBm	dBm	dB	Detector
1		11220.540	29.11	21.54	50.65	68.30	-17.65	peak
2	*	11220.540	20.12	21.54	41.66	54.00	-12.34	AVG

Emission Level= Read Level+ Correct Factor

Temperature:	25 ℃	**Relative Humidity:**	55%
Test Voltage:	DC 3.8V		
Ant. Pol.	Vertical		
Test Mode:	TX 802.11ac(VHT80) Mode 5610MHz (U-NII-2C)		
Remark:	No report for the emission which more than 10 dB below the prescribed limit.		

No.	Mk.	Freq.	Reading Level	Correct Factor	Measure-ment	Limit	Over	
		MHz	dBm	dB	dBm	dBm	dB	Detector
1		11220.360	28.74	21.54	50.28	68.30	-18.02	peak
2	*	11220.360	20.23	21.54	41.77	54.00	-12.23	AVG

Emission Level= Read Level+ Correct Factor

Temperature:	25 ℃	**Relative Humidity:**	55%
Test Voltage:	DC 3.8V		
Ant. Pol.	Horizontal		
Test Mode:	TX 802.11ac(VHT80) Mode 5690MHz (U-NII-2C)		
Remark:	No report for the emission which more than 10 dB below the prescribed limit.		

No.	Mk.	Freq.	Reading Level	Correct Factor	Measure-ment	Limit	Over	
		MHz	dBm	dB	dBm	dBm	dB	Detector
1		11380.520	29.15	21.70	50.85	68.30	-17.45	peak
2	*	11380.520	19.58	21.70	41.28	54.00	-12.72	AVG

Emission Level= Read Level+ Correct Factor

Temperature:	25 ℃	**Relative Humidity:**	55%
Test Voltage:	DC 3.8V		
Ant. Pol.	Vertical		
Test Mode:	TX 802.11ac(VHT80) Mode 5690MHz (U-NII-2C)		
Remark:	No report for the emission which more than 10 dB below the prescribed limit.		

No.	Mk.	Freq.	Reading Level	Correct Factor	Measure-ment	Limit	Over	
		MHz	dBm	dB	dBm	dBm	dB	Detector
1		11380.440	29.48	21.70	51.18	68.30	-17.12	peak
2	*	11380.440	20.33	21.70	42.03	54.00	-11.97	AVG

Emission Level= Read Level+ Correct Factor

5745MHz-5825MHz(U-NII-3)

Temperature:	25 ℃	**Relative Humidity:**	55%
Test Voltage:	DC 3.8V		
Ant. Pol.	Horizontal		
Test Mode:	TX 802.11a Mode 5745MHz (U-NII-3)		
Remark:	No report for the emission which more than 10 dB below the prescribed limit.		

No.	Mk.	Freq.	Reading Level	Correct Factor	Measure-ment	Limit	Over	
		MHz	dBm	dB	dBm	dBm	dB	Detector
1		11490.560	29.25	21.81	51.06	68.30	-17.24	peak
2	*	11490.560	20.88	21.81	42.69	54.00	-11.31	AVG

Emission Level= Read Level+ Correct Factor

Temperature:	25 ℃	**Relative Humidity:**	55%
Test Voltage:	DC 3.8V		
Ant. Pol.	Vertical		
Test Mode:	TX 802.11a Mode 5745MHz (U-NII-3)		
Remark:	No report for the emission which more than 10 dB below the prescribed limit.		

No.	Mk.	Freq.	Reading Level	Correct Factor	Measure-ment	Limit	Over	
		MHz	dBm	dB	dBm	dBm	dB	Detector
1		11490.880	29.57	21.81	51.38	68.30	-16.92	peak
2	*	11490.880	21.84	21.81	43.65	54.00	-10.35	AVG

Emission Level= Read Level+ Correct Factor

Temperature:	25 ℃	**Relative Humidity:**	55%
Test Voltage:	DC 3.8V		
Ant. Pol.	Horizontal		
Test Mode:	TX 802.11a Mode 5785MHz (U-NII-3)		
Remark:	No report for the emission which more than 10 dB below the prescribed limit.		

No.	Mk.	Freq.	Reading Level	Correct Factor	Measure-ment	Limit	Over	
		MHz	dBm	dB	dBm	dBm	dB	Detector
1		11570.520	28.96	21.88	50.84	68.30	-17.46	peak
2	*	11570.520	20.85	21.88	42.73	54.00	-11.27	AVG

Emission Level= Read Level+ Correct Factor

Temperature:	25 ℃	**Relative Humidity:**	55%
Test Voltage:	DC 3.8V		
Ant. Pol.	Vertical		
Test Mode:	TX 802.11a Mode 5785MHz (U-NII-3)		
Remark:	No report for the emission which more than 10 dB below the prescribed limit.		

No.	Mk.	Freq.	Reading Level	Correct Factor	Measure-ment	Limit	Over	
		MHz	dBm	dB	dBm	dBm	dB	Detector
1		11570.650	29.75	21.88	51.63	68.30	-16.67	peak
2	*	11570.650	21.34	21.88	43.22	54.00	-10.78	AVG

Emission Level= Read Level+ Correct Factor

Temperature:	25 ℃	**Relative Humidity:**	55%
Test Voltage:	DC 3.8V		
Ant. Pol.	Horizontal		
Test Mode:	TX 802.11a Mode 5825MHz (U-NII-3)		
Remark:	No report for the emission which more than 10 dB below the prescribed limit.		

No.	Mk.	Freq.	Reading Level	Correct Factor	Measure-ment	Limit	Over	
		MHz	dBm	dB	dBm	dBm	dB	Detector
1		11650.250	28.96	21.96	50.92	68.30	-17.38	peak
2	*	11650.250	20.87	21.96	42.83	54.00	-11.17	AVG

Emission Level= Read Level+ Correct Factor

Temperature:	25 ℃	**Relative Humidity:**	55%
Test Voltage:	DC 3.8V		
Ant. Pol.	Vertical		
Test Mode:	TX 802.11a Mode 5825MHz (U-NII-3)		
Remark:	No report for the emission which more than 10 dB below the prescribed limit.		

No.	Mk.	Freq.	Reading Level	Correct Factor	Measure-ment	Limit	Over	
		MHz	dBm	dB	dBm	dBm	dB	Detector
1		11650.280	29.57	21.96	51.53	68.30	-16.77	peak
2	*	11650.280	21.24	21.96	43.20	54.00	-10.80	AVG

Emission Level= Read Level+ Correct Factor

Temperature:	25 ℃	**Relative Humidity:**	55%
Test Voltage:	DC 3.8V		
Ant. Pol.	Horizontal		
Test Mode:	TX 802.11n(HT20) Mode 5745MHz (U-NII-3)		
Remark:	No report for the emission which more than 10 dB below the prescribed limit.		

No.	Mk.	Freq.	Reading Level	Correct Factor	Measure-ment	Limit	Over	
		MHz	dBm	dB	dBm	dBm	dB	Detector
1		11490.650	28.35	21.81	50.16	68.30	-18.14	peak
2	*	11490.650	19.24	21.81	41.05	54.00	-12.95	AVG

Emission Level= Read Level+ Correct Factor

Temperature:	25 ℃	**Relative Humidity:**	55%
Test Voltage:	DC 3.8V		
Ant. Pol.	Vertical		
Test Mode:	TX 802.11n(HT20) Mode 5745MHz (U-NII-3)		
Remark:	No report for the emission which more than 10 dB below the prescribed limit.		

No.	Mk.	Freq.	Reading Level	Correct Factor	Measure-ment	Limit	Over	
		MHz	dBm	dB	dBm	dBm	dB	Detector
1		11490.870	28.69	21.81	50.50	68.30	-17.80	peak
2	*	11490.870	19.86	21.81	41.67	54.00	-12.33	AVG

Emission Level= Read Level+ Correct Factor

Temperature:	25 ℃	**Relative Humidity:**	55%
Test Voltage:	DC 3.8V		
Ant. Pol.	Horizontal		
Test Mode:	TX 802.11n(HT20) Mode 5785MHz (U-NII-3)		
Remark:	No report for the emission which more than 10 dB below the prescribed limit.		

No.	Mk.	Freq.	Reading Level	Correct Factor	Measure-ment	Limit	Over	
		MHz	dBm	dB	dBm	dBm	dB	Detector
1		11570.520	28.54	21.88	50.42	68.30	-17.88	peak
2	*	11570.520	19.65	21.88	41.53	54.00	-12.47	AVG

Emission Level= Read Level+ Correct Factor

Temperature:	25 ℃	**Relative Humidity:**	55%
Test Voltage:	DC 3.8V		
Ant. Pol.	Vertical		
Test Mode:	TX 802.11n(HT20) Mode 5785MHz (U-NII-3)		
Remark:	No report for the emission which more than 10 dB below the prescribed limit.		

No.	Mk.	Freq.	Reading Level	Correct Factor	Measure-ment	Limit	Over	
		MHz	dBm	dB	dBm	dBm	dB	Detector
1		11570.480	28.67	21.88	50.55	68.30	-17.75	peak
2	*	11570.480	20.14	21.88	42.02	54.00	-11.98	AVG

Emission Level= Read Level+ Correct Factor

Temperature:	25 ℃	**Relative Humidity:**	55%
Test Voltage:	DC 3.8V		
Ant. Pol.	Horizontal		
Test Mode:	TX 802.11n(HT20) Mode 5825MHz (U-NII-3)		
Remark:	No report for the emission which more than 10 dB below the prescribed limit.		

No.	Mk.	Freq.	Reading Level	Correct Factor	Measure-ment	Limit	Over	
		MHz	dBm	dB	dBm	dBm	dB	Detector
1		11650.270	28.55	21.96	50.51	68.30	-17.79	peak
2	*	11650.270	20.87	21.96	42.83	54.00	-11.17	AVG

Emission Level= Read Level+ Correct Factor

Temperature:	25 ℃	**Relative Humidity:**	55%
Test Voltage:	DC 3.8V		
Ant. Pol.	Vertical		
Test Mode:	TX 802.11n(HT20) Mode 5825MHz (U-NII-3)		
Remark:	No report for the emission which more than 10 dB below the prescribed limit.		

No.	Mk.	Freq.	Reading Level	Correct Factor	Measure-ment	Limit	Over	
		MHz	dBm	dB	dBm	dBm	dB	Detector
1		11650.570	29.57	21.96	51.53	68.30	-16.77	peak
2	*	11650.570	21.68	21.96	43.64	54.00	-10.36	AVG

Emission Level= Read Level+ Correct Factor

Temperature:	25 ℃	**Relative Humidity:**	55%
Test Voltage:	DC 3.8V		
Ant. Pol.	Horizontal		
Test Mode:	TX 802.11ac(VHT20) Mode 5745MHz (U-NII-3)		
Remark:	No report for the emission which more than 10 dB below the prescribed limit.		

No.	Mk.	Freq.	Reading Level	Correct Factor	Measure-ment	Limit	Over	
		MHz	dBm	dB	dBm	dBm	dB	Detector
1		11490.620	28.64	21.81	50.45	68.30	-17.85	peak
2	*	11490.620	19.65	21.81	41.46	54.00	-12.54	AVG

Emission Level= Read Level+ Correct Factor

Temperature:	25 ℃	**Relative Humidity:**	55%
Test Voltage:	DC 3.8V		
Ant. Pol.	Vertical		
Test Mode:	TX 802.11ac(VHT20) Mode 5745MHz (U-NII-3)		
Remark:	No report for the emission which more than 10 dB below the prescribed limit.		

No.	Mk.	Freq.	Reading Level	Correct Factor	Measure-ment	Limit	Over	
		MHz	dBm	dB	dBm	dBm	dB	Detector
1		11490.580	28.34	21.81	50.15	68.30	-18.15	peak
2	*	11490.580	20.14	21.81	41.95	54.00	-12.05	AVG

Emission Level= Read Level+ Correct Factor

Temperature:	25 ℃	**Relative Humidity:**	55%
Test Voltage:	DC 3.8V		
Ant. Pol.	Horizontal		
Test Mode:	TX 802.11ac(VHT20) Mode 5785MHz (U-NII-3)		
Remark:	No report for the emission which more than 10 dB below the prescribed limit.		

No.	Mk.	Freq.	Reading Level	Correct Factor	Measure-ment	Limit	Over	
		MHz	dBm	dB	dBm	dBm	dB	Detector
1		11570.250	28.37	21.88	50.25	68.30	-18.05	peak
2	*	11570.650	18.25	21.88	40.13	54.00	-13.87	AVG

Emission Level= Read Level+ Correct Factor

Temperature:	25 ℃	**Relative Humidity:**	55%
Test Voltage:	DC 3.8V		
Ant. Pol.	Vertical		
Test Mode:	TX 802.11ac(VHT20) Mode 5785MHz (U-NII-3)		
Remark:	No report for the emission which more than 10 dB below the prescribed limit.		

No.	Mk.	Freq.	Reading Level	Correct Factor	Measure-ment	Limit	Over	
		MHz	dBm	dB	dBm	dBm	dB	Detector
1	*	11570.280	19.17	21.88	41.05	54.00	-12.95	AVG
2		11570.960	28.57	21.88	50.45	68.30	-17.85	peak

Emission Level= Read Level+ Correct Factor

Temperature:	25 ℃	**Relative Humidity:**	55%
Test Voltage:	DC 3.8V		
Ant. Pol.	Horizontal		
Test Mode:	TX 802.11ac(VHT20) Mode 5825MHz (U-NII-3)		
Remark:	No report for the emission which more than 10 dB below the prescribed limit.		

No.	Mk.	Freq.	Reading Level	Correct Factor	Measure-ment	Limit	Over	
		MHz	dBm	dB	dBm	dBm	dB	Detector
1		11650.450	28.33	21.96	50.29	68.30	-18.01	peak
2	*	11650.450	19.56	21.96	41.52	54.00	-12.48	AVG

Emission Level= Read Level+ Correct Factor

Temperature:	25 ℃	**Relative Humidity:**	55%
Test Voltage:	DC 3.8V		
Ant. Pol.	Vertical		
Test Mode:	TX 802.11ac(VHT20) Mode 5825MHz (U-NII-3)		
Remark:	No report for the emission which more than 10 dB below the prescribed limit.		

No.	Mk.	Freq.	Reading Level	Correct Factor	Measure-ment	Limit	Over	
		MHz	dBm	dB	dBm	dBm	dB	Detector
1		11650.870	28.67	21.96	50.63	68.30	-17.67	peak
2	*	11650.870	20.15	21.96	42.11	54.00	-11.89	AVG

Emission Level= Read Level+ Correct Factor

Temperature:	25 ℃	**Relative Humidity:**	55%
Test Voltage:	DC 3.8V		
Ant. Pol.	Horizontal		
Test Mode:	TX 802.11n(HT40) Mode 5755MHz (U-NII-3)		
Remark:	No report for the emission which more than 10 dB below the prescribed limit.		

No.	Mk.	Freq.	Reading Level	Correct Factor	Measure-ment	Limit	Over	
		MHz	dBm	dB	dBm	dBm	dB	Detector
1		11510.660	28.54	21.82	50.36	68.30	-17.94	peak
2	*	11510.660	19.38	21.82	41.20	54.00	-12.80	AVG

Emission Level= Read Level+ Correct Factor

Temperature:	25 ℃	**Relative Humidity:**	55%
Test Voltage:	DC 3.8V		
Ant. Pol.	Vertical		
Test Mode:	TX 802.11n(HT40) Mode 5755MHz (U-NII-3)		
Remark:	No report for the emission which more than 10 dB below the prescribed limit.		

No.	Mk.	Freq.	Reading Level	Correct Factor	Measure-ment	Limit	Over	
		MHz	dBm	dB	dBm	dBm	dB	Detector
1		11510.690	29.47	21.82	51.29	68.30	-17.01	peak
2	*	11510.690	20.11	21.82	41.93	54.00	-12.07	AVG

Emission Level= Read Level+ Correct Factor

Temperature:	25 ℃	**Relative Humidity:**	55%
Test Voltage:	DC 3.8V		
Ant. Pol.	Horizontal		
Test Mode:	TX 802.11n(HT40) Mode 5795MHz (U-NII-3)		
Remark:	No report for the emission which more than 10 dB below the prescribed limit.		

No.	Mk.	Freq.	Reading Level	Correct Factor	Measure-ment	Limit	Over	
		MHz	dBm	dB	dBm	dBm	dB	Detector
1		11590.430	28.34	21.90	50.24	68.30	-18.06	peak
2	*	11590.430	19.36	21.90	41.26	54.00	-12.74	AVG

Emission Level= Read Level+ Correct Factor

Temperature:	25 ℃	**Relative Humidity:**	55%
Test Voltage:	DC 3.8V		
Ant. Pol.	Vertical		
Test Mode:	TX 802.11n(HT40) Mode 5795MHz (U-NII-3)		
Remark:	No report for the emission which more than 10 dB below the prescribed limit.		

No.	Mk.	Freq.	Reading Level	Correct Factor	Measure-ment	Limit	Over	
		MHz	dBm	dB	dBm	dBm	dB	Detector
1		11590.560	28.67	21.90	50.57	68.30	-17.73	peak
2	*	11590.560	20.14	21.90	42.04	54.00	-11.96	AVG

Emission Level= Read Level+ Correct Factor

Temperature:	25 ℃	**Relative Humidity:**	55%
Test Voltage:	DC 3.8V		
Ant. Pol.	Horizontal		
Test Mode:	TX 802.11ac(VHT40) Mode 5755MHz (U-NII-3)		
Remark:	No report for the emission which more than 10 dB below the prescribed limit.		

No.	Mk.	Freq.	Reading Level	Correct Factor	Measure-ment	Limit	Over	
		MHz	dBm	dB	dBm	dBm	dB	Detector
1		11510.360	28.99	21.82	50.81	68.30	-17.49	peak
2	*	11510.360	19.78	21.82	41.60	54.00	-12.40	AVG

Emission Level= Read Level+ Correct Factor

Temperature:	25 ℃	**Relative Humidity:**	55%
Test Voltage:	DC 3.8V		
Ant. Pol.	Vertical		
Test Mode:	TX 802.11ac(VHT40) Mode 5755MHz (U-NII-3)		
Remark:	No report for the emission which more than 10 dB below the prescribed limit.		

No.	Mk.	Freq.	Reading Level	Correct Factor	Measure-ment	Limit	Over	
		MHz	dBm	dB	dBm	dBm	dB	Detector
1		11510.290	29.05	21.82	50.87	68.30	-17.43	peak
2	*	11510.290	20.11	21.82	41.93	54.00	-12.07	AVG

Emission Level= Read Level+ Correct Factor