UC15 Hardware Design

UMTS/HSDPA Module Series

Rev. UC15_Hardware_Design_V1.3

Date: 2014-04-21

www.quectel.com

Our aim is to provide customers with timely and comprehensive service. For any assistance, please contact our company headquarters:

Quectel Wireless Solutions Co., Ltd.
Office 501, Building 13, No.99, Tianzhou Road, Shanghai, China, 200233
Tel: +86 21 5108 6236
Mail: info@quectel.com

Or our local office, for more information, please visit:
http://www.quectel.com/support/salesupport.aspx

For technical support, to report documentation errors, please visit:
http://www.quectel.com/support/techsupport.aspx

GENERAL NOTES

QUECTEL OFFERS THIS INFORMATION AS A SERVICE TO ITS CUSTOMERS. THE INFORMATION PROVIDED IS BASED UPON CUSTOMERS' REQUIREMENTS. QUECTEL MAKES EVERY EFFORT TO ENSURE THE QUALITY OF THE INFORMATION IT MAKES AVAILABLE. QUECTEL DOES NOT MAKE ANY WARRANTY AS TO THE INFORMATION CONTAINED HEREIN, AND DOES NOT ACCEPT ANY LIABILITY FOR ANY INJURY, LOSS OR DAMAGE OF ANY KIND INCURRED BY USE OF OR RELIANCE UPON THE INFORMATION. THE INFORMATION SUPPLIED HEREIN IS SUBJECT TO CHANGE WITHOUT PRIOR NOTICE.

COPYRIGHT

THIS INFORMATION CONTAINED HERE IS PROPRIETARY TECHNICAL INFORMATION OF QUECTEL CO., LTD. TRANSMITTABLE, REPRODUCTION, DISSEMINATION AND EDITING OF THIS DOCUMENT AS WELL AS UTILIZATION OF THIS CONTENTS ARE FORBIDDEN WITHOUT PERMISSION. OFFENDERS WILL BE HELD LIABLE FOR PAYMENT OF DAMAGES. ALL RIGHTS ARE RESERVED IN THE EVENT OF A PATENT GRANT OR REGISTRATION OF A UTILITY MODEL OR DESIGN.

Copyright © Quectel Wireless Solutions Co., Ltd. 2014. All rights reserved.

About the Document

History

Revision	Date	Author	Description
1.0	2013-11-26	Mountain ZHOU	Initial
1.1	2014-01-15	Huik LI	1. Modified packaging information of UC15 in the Chapter 7.3. 2. Modified Figure 4 and Figure 11. 3. Modified the description of command **AT+CFUN** in the Chapter 3.5.2.
1.2	2014-02-14	Huik LI	Modified the frequency bands of UC15-A.
1.3	2014-04-21	Huik LI	1. Modified current consumption in Chapter 5.4. 2. Added PCM feature in Chapter 3.12.

Contents

About the Document **2**
Contents **3**
Table Index **6**
Figure Index **7**

1 Introduction **9**
1.1. Safety Information 9

2 Product Concept **11**
2.1. General Description 11
2.2. Directives and Standards 12
2.2.1. FCC Statement 12
2.2.2. FCC Radiation Exposure Statement 12
2.3. Key Features 13
2.4. Functional Diagram 15
2.5. Evaluation Board 16

3 Application Interface **17**
3.1. General Description 17
3.2. Pin Assignment 18
3.3. Pin Description 19
3.4. Operating Modes 24
3.5. Power Saving 25
3.5.1. Sleep Mode 25
3.5.1.1. UART Application 25
3.5.1.2. USB Application with Suspend Function 26
3.5.1.3. USB Application without Suspend Function 27
3.5.2. Minimum Functionality Mode 27
3.6. Power Supply 28
3.6.1. Power Supply Pins 28
3.6.2. Decrease Voltage Drop 28
3.6.3. Reference Design for Power Supply 29
3.6.4. Monitor the Power Supply 30
3.6.5. VDD_EXT 30
3.7. Turn on and off Scenarios 30
3.7.1. Turn on Module by PWRKEY Pin 30
3.7.2. Turn off Module 32
3.7.2.1. Turn off Module by PWRKEY Pin 32
3.7.2.2. Turn off Module by AT Command 33
3.7.2.3. Automatic Shutdown 33
3.8. Reset the Module 34
3.9. UART Interface 35
3.9.1. The Connection of UART 36
3.9.2. UART Application 38

3.10. Behavior of the RI 39
3.11. Analog Audio Interface 40
3.11.1. Decrease TDD Noise and Other Noise 41
3.11.2. Microphone Interfaces Application 42
3.11.3. Receiver and Speaker Interface Application 43
3.11.4. Earphone Interface Application 45
3.12. PCM and I2C Interface 46
3.13. USIM Card Interface 48
3.13.1. USIM Card Application 48
3.13.2. Design Considerations for USIM Card Holder 50
3.14. USB Interface 53
3.15. ADC Function 54
3.16. Network Status Indication 55
3.17. Operating Status Indication 56

4 Antenna Interface 58
4.1. Antenna Interface 58
4.1.1. Pin Definition 58
4.1.2. Operating Frequency 58
4.1.3. Reference Design 58
4.2. Antenna Installation 59
4.2.1. Antenna Requirement 59
4.2.2. Install the Antenna with RF Connector 59

5 Electrical, Reliability and Radio Characteristics 62
5.1. Absolute Maximum Ratings 62
5.2. Power Supply Ratings 63
5.3. Operating Temperature 63
5.4. Current Consumption 64
5.5. RF Output Power 65
5.6. RF Receiving Sensitivity 65
5.7. Electrostatic Discharge 66

6 Mechanical Dimensions 67
6.1. Mechanical Dimensions of the Module 67
6.2. Footprint of Recommendation 69
6.3. Top View of the Module 70
6.4. Bottom View of the Module 70

7 Storage and Manufacturing 71
7.1. Storage 71
7.2. Manufacturing and Welding 71
7.3. Packaging 72

8 Appendix A Reference 74

9 Appendix B GPRS Coding Scheme 77

10 Appendix C GPRS Multi-slot Class 78

11 Appendix D EDGE Modulation and Coding Scheme 79

Table Index

TABLE 1: FREQUENCY BANDS OF UC15 SERIES 11
TABLE 2: UC15 KEY FEATURES 13
TABLE 3: IO PARAMETERS DEFINITION 19
TABLE 4: PIN DESCRIPTION 19
TABLE 5: OVERVIEW OF OPERATING MODES 24
TABLE 6: VBAT AND GND PIN 28
TABLE 7: ELECTRICAL CHARACTERISTICS OF VDD_EXT 30
TABLE 8: PWRKEY PIN DESCRIPTION 30
TABLE 9: RESET_N PIN DESCRIPTION 34
TABLE 10: PIN DEFINITION OF THE UART INTERFACE 35
TABLE 11: LOGIC LEVELS OF DIGITAL I/O 36
TABLE 12: BEHAVIOR OF THE RI 40
TABLE 13: PIN DEFINITION OF THE AUDIO INTERFACE 40
TABLE 14: MICROPHONE CHARACTERISTICS 45
TABLE 15: SPEAKER CHARACTERISTICS 45
TABLE 16: PIN DEFINITION OF PCM AND I2C INTERFACE 47
TABLE 17: PIN DEFINITION OF THE USIM INTERFACES 48
TABLE 18: PIN DESCRIPTION OF MOLEX USIM CARD HOLDER 51
TABLE 19: PIN DESCRIPTION OF AMPHENOL USIM CARD HOLDER 52
TABLE 20: USB PIN DESCRIPTION 53
TABLE 21: PIN DEFINITION OF THE ADC 55
TABLE 22: CHARACTERISTICS OF THE ADC 55
TABLE 23: PIN DEFINITION OF NETWORK INDICATOR 55
TABLE 24: WORKING STATE OF THE NETWORK INDICATOR 55
TABLE 25: PIN DEFINITION OF STATUS 56
TABLE 26: PIN DEFINITION OF THE RF ANTENNA 58
TABLE 27: MODULE OPERATING FREQUENCIES 58
TABLE 28: ANTENNA REQUIREMENTS 59
TABLE 29: ABSOLUTE MAXIMUM RATINGS 62
TABLE 30: THE MODULE POWER SUPPLY RATINGS 63
TABLE 31: OPERATING TEMPERATURE 63
TABLE 32: MODULE CURRENT CONSUMPTION 64
TABLE 33: MODULE CONDUCTED RF OUTPUT POWER 65
TABLE 34: MODULE CONDUCTED RECEIVING SENSITIVITY 65
TABLE 35: ELECTROSTATICS DISCHARGE CHARACTERISTICS 66
TABLE 36: RELATED DOCUMENTS 74
TABLE 37: TERMS AND ABBREVIATIONS 74
TABLE 38: DESCRIPTION OF DIFFERENT CODING SCHEMES 77
TABLE 39: DESCRIPTION OF DIFFERENT CODING SCHEMES 78
TABLE 40: EDGE MODULATION AND CODING SCHEME 79

Figure Index

FIGURE 1: FUNCTIONAL DIAGRAM 16
FIGURE 2: PIN ASSIGNMENT (TOP VIEW) 18
FIGURE 3: UART SLEEP APPLICATION 26
FIGURE 4: USB APPLICATION WITH SUSPEND FUNCTION 26
FIGURE 5: USB SLEEP APPLICATION WITHOUT SUSPEND FUNCTION 27
FIGURE 6: STAR STRUCTURE OF THE POWER SUPPLY 29
FIGURE 7: REFERENCE CIRCUIT OF POWER SUPPLY 29
FIGURE 8: TURN ON THE MODULE BY DRIVING CIRCUIT 31
FIGURE 9: TURN ON THE MODULE BY KEYSTROKE 31
FIGURE 10: TIMING OF TURNING ON MODULE 32
FIGURE 11: TIMING OF TURNING OFF MODULE 33
FIGURE 12: REFERENCE CIRCUIT OF RESET_N 34
FIGURE 13: TIMING OF RESETTING MODULE 35
FIGURE 14: CONNECTION OF FULL FUNCTIONAL UART PORT 36
FIGURE 15: CONNECTION OF THREE LINES UART PORT 37
FIGURE 16: CONNECTION OF UART PORT WITH HARDWARE FLOW CONTROL 37
FIGURE 17: 3.3V LEVEL MATCH CIRCUIT 38
FIGURE 18: 5V LEVEL MATCH CIRCUIT 38
FIGURE 19: RS232 LEVEL SHIFT CIRCUIT 39
FIGURE 20: RI BEHAVIOR 40
FIGURE 21: MICROPHONE REFERENCE DESIGN FOR AIN1&AIN2 42
FIGURE 22: REFERENCE DESIGN FOR AOUT1 43
FIGURE 23: REFERENCE DESIGN WITH AN AMPLIFIER FOR AOUT1 43
FIGURE 24: REFERENCE DESIGN FOR AOUT2 44
FIGURE 25: REFERENCE DESIGN WITH AN AMPLIFIER FOR AOUT2 44
FIGURE 26: REFERENCE DESIGN FOR AN EARPHONE 45
FIGURE 27: PRIMARY MODE TIMING 46
FIGURE 28: AUXILIARY MODE TIMING 47
FIGURE 29: REFERENCE CIRCUIT OF PCM APPLICATION WITH AUDIO CODEC 48
FIGURE 30: REFERENCE CIRCUIT OF THE 8-PIN USIM CARD 49
FIGURE 31: REFERENCE CIRCUIT OF THE 6-PIN USIM CARD 50
FIGURE 32: MOLEX 91228 USIM CARD HOLDER 51
FIGURE 33: AMPHENOL C707 10M006 512 2 USIM CARD HOLDER 52
FIGURE 34: REFERENCE CIRCUIT OF USB APPLICATION 53
FIGURE 35: TEST POINTS OF FIRMWARE UPGRADE 54
FIGURE 36: REFERENCE CIRCUIT OF THE NETWORK INDICATOR 56
FIGURE 37: REFERENCE CIRCUIT OF THE STATUS 57
FIGURE 38: REFERENCE CIRCUIT OF ANTENNA INTERFACE 59
FIGURE 39: DIMENSIONS OF THE UF.L-R-SMT CONNECTOR (UNIT: MM) 60
FIGURE 40: MECHANICALS OF UF.L-LP CONNECTORS (UNIT: MM) 60
FIGURE 41: SPACE FACTOR OF MATED CONNECTOR (UNIT: MM) 61

FIGURE 42: UC15 TOP AND SIDE DIMENSIONS 67
FIGURE 43: UC15 BOTTOM DIMENSIONS (BOTTOM VIEW) 68
FIGURE 44: BOTTOM PADS DIMENSIONS (BOTTOM VIEW) 68
FIGURE 45: RECOMMENDED FOOTPRINT (TOP VIEW) 69
FIGURE 46: TOP VIEW OF THE MODULE 70
FIGURE 47: BOTTOM VIEW OF THE MODULE 70
FIGURE 48: REFLOW SOLDERING PROFILE 72
FIGURE 49: CARRIER TAPE 73

1 Introduction

This document defines the UC15 module and describes its hardware interface which are connected with your application and the air interface.

This document can help you quickly understand module interface specifications, electrical and mechanical details. Associated with application notes and user guide, you can use UC15 module to design and set up mobile applications easily.

1.1. Safety Information

The following safety precautions must be observed during all phases of the operation, such as usage, service or repair of any cellular terminal or mobile incorporating UC15 module. Manufacturers of the cellular terminal should send the following safety information to users and operating personnel and to incorporate these guidelines into all manuals supplied with the product. If not so, Quectel does not take on any liability for customer failure to comply with these precautions.

	Full attention must be given to driving at all times in order to reduce the risk of an accident. Using a mobile while driving (even with a handsfree kit) cause distraction and can lead to an accident. You must comply with laws and regulations restricting the use of wireless devices while driving.
	Switch off the cellular terminal or mobile before boarding an aircraft. Make sure it switched off. The operation of wireless appliances in an aircraft is forbidden to prevent interference with communication systems. Consult the airline staff about the use of wireless devices on boarding the aircraft, if your device offers a Airplane Mode which must be enabled prior to boarding an aircraft.
	Switch off your wireless device when in hospitals or clinics or other health care facilities. These requests are desinged to prevent possible interference with sentitive medical equipment.

	GSM cellular terminals or mobiles operate over radio frequency signal and cellular network and cannot be guaranteed to connect in all conditions, for example no mobile fee or an invalid USIM card. While you are in this condition and need emergent help, please remember using emergency call. In order to make or receive call, the cellular terminal or mobile must be switched on and in a service area with adequate cellular signal strength.
	Your cellular terminal or mobile contains a transmitter and receiver. When it is ON , it receives and transmits radio frequency energy. RF interference can occur if it is used close to TV set, radio, computer or other electric equipment.
	In locations with potencially explosive atmospheres, obey all posted signs to turn off wireless devices such as your phone or other cellular terminals. Areas with potencially exposive atmospheres including fuelling areas, below decks on boats, fuel or chemical transfer or storage facilities, areas where the air contains chemicals or particles such as grain, dust or metal powders.

2 Product Concept

2.1. General Description

UC15 is an embedded UMTS/HSDPA module. Its UMTS-based modem provides data connectivity on HSDPA, WCDMA, EDGE and GPRS networks. UC15 offers a maximum data rate of 3.6Mbps on downlink and also supports GPRS/EDGE multi-slot class 12 as well. GPRS supports the coding schemes CS-1, CS-2, CS-3 and CS-4. EDGE supports CS-1 to CS-4 and MCS-1 to MCS-9 coding schemes. UC15 includes two variants, UC15-A and UC15-E. And both of them are divided into Telematics version and Data Only version. Telematics version supports voice and data, while Data Only version only supports data. This is convenient for you to choose the dedicated type based on the wireless network configuration. The following table shows the entire radio band configuration of UC15 series.

Table 1: Frequency Bands of UC15 Series

Module	GSM 850	EGSM 900	DCS 1800	PCS 1900	UMTS 850	UMTS 900	UMTS 1900	UMTS 2100
UC15	●	●	●	●	●		●	

More details about GPRS/EDGE multi-slot configuration and coding schemes, please refer to Appendix B, C and D.

With a tiny profile of 29.0mm × 29.0mm × 2.5mm, UC15 can meet almost all requirements for M2M application such as automotive, metering, tracking system, security solutions, routers, wireless POS, mobile computing devices, PDA phone and tablet PC, etc.

UC15 is an SMD type module, which can be embedded in your application through its 108-pin pads including 68 LCC signal pads and 40 other pads.

UC15 is integrated with internet service protocols such as TCP/UDP and PPP. Extended AT commands have been developed for you to use these internet service protocols easily.

2.2. Directives and Standards

The UC15 module is designed to comply with the FCC statements. FCC ID: XMR201404UC15
If the FCC ID of the module cannot be seen by the user in the final installation, the host device must show the statement: “Contains FCC ID: XMR201404UC15” in a visible and permanent location”

2.2.1. FCC Statement

1. This device complies with Part 15 of the FCC rules. Operation is subject to the following conditions:
a) This device may not cause harmful interference.
b) This device must accept any interference received, including interference that may cause undesired operation.
2. Changes or modifications not expressly approved by the party responsible for compliance could avoid the user’s authority to operate the equipment.

2.2.2. FCC Radiation Exposure Statement

This equipment complies with FCC radiation exposure limits set forth for an uncontrolled environment.

This equipment should be installed and operated with minimum distance 20cm between the radiator and your body as well as kept minimum 20cm from radio antenna depending on the Mobile status of this module usage.

This module should NOT be installed and operating simultaneously with other radio.

The manual of the host system, which uses UC15, must include RF exposure warning statement to advice user should keep minimum 20cm from the radio antenna of UC15 module depending on the Mobile status.

Note: If a portable device (such as PDA) uses UC15 module, the device needs to do permissive change and SAR testing.

2.3. Key Features

The following table describes the detailed features of UC15 module.

Table 2: UC15 Key Features

Feature	Details
Power Supply	Supply voltage: 3.3V~4.3V Typical supply voltage: 3.8V
Frequency Bands	UC15-A: GSM850/900/1800/1900, UMTS850/1900
Transmission Data	HSDPA R5: Max 3.6Mbps (DL) WCDMA R99: Max 384kbps (DL)/Max 384kbps (UL) EDGE: Max 236.8kbps (DL only) GPRS: Max 85.6kbps (DL)/Max 85.6kbps (UL) CSD: 64kbps
Transmitting Power	Class 4 (33dBm±2dB) for GSM850 Class 1 (30dBm±2dB) for PCS1900 Class E2 (27dBm±3dB) for GSM850 and EGSM900 8-PSK Class E2 (26dBm+3/-4dB) for DCS1800 and PCS1900 8-PSK Class 3 (24dBm+1/-3dB) for UMTS850/1900
HSDPA and WCDMA Features	HSDPA data rate is corresponded with 3GPP R5. 3.6Mbps on downlink. WCDMA data rate is corresponded with 3GPP R99/R4. 384kbps on downlink and 384kbps on uplink. Support both 16-QAM and QPSK modulation.
GSM/GPRS/EDGE Data Features	**GPRS:** Support GPRS multi-slot class 12 (10 by default) Coding scheme: CS-1, CS-2, CS-3 and CS-4 Maximum of four Rx time slots per frame **EDGE:** Support EDGE multi-slot class 12 (12 by default). Support GMSK and 8-PSK for different MCS (Modulation and Coding scheme). Downlink coding schemes: CS 1-4 and MCS 1-9. **CSD:** CSD transmission rates: 64kbps non-transparent. Support Unstructured Supplementary Services Data (USSD).

Internet Protocol Features	Support TCP/PPP/UDP protocols. Support the protocols PAP (Password Authentication Protocol) and CHAP (Challenge Handshake Authentication Protocol) usually used for PPP connections.
SMS	Text and PDU mode Point to point MO and MT SMS cell broadcast SMS storage: ME by default
USIM Interface	Support USIM/SIM card: 1.8V, 3.0V
Audio Features	Support two analog input channels and two analog output channels. GSM: HR/FR/EFR/AMR/AMR-WB WCDMA: AMR/AMR-WB Echo cancellation and noise suppression.
PCM Interface*	Used for audio function with external codec. Support 16-bit linear data formats. Support long frame sync and short frame sync. Support master and slave mode, but must be the master in long frame sync.
UART Interface	Seven lines on UART interface. Support RTS and CTS hardware flow control. Baud rate can reach up to 921600bps, 115200bps by default. Used for AT command, data transmission and firmware upgrade.
USB Interface	Compliant with USB 2.0 specification (slave only), the data transfer rate can reach up to 480 Mbps at high speed mode. Used for AT command communication, data transmission, software debug and firmware upgrade. USB driver: support Windows XP, Windows Vista, Windows 7, Windows 8, Windows CE5.0/6.0, Windows Mobile 6.1/6.5, Linux 2.6 or later, Android 2.3 or later.
AT Commands	Compliant with 3GPP TS 27.007, 27.005 and Quectel enhanced AT commands.
Network Indication	Indicate network activity status.
Antenna Interface	Connected via 50ohm antenna pad.
Physical Characteristics	Size: 29.0±0.15 × 29.0±0.15 × 2.5±0.2 mm Weight: Approx. 4.3g
Temperature Range	Normal operation: -35°C ~ +75°C Restricted operation: -40°C ~ -35°C and +75°C ~ +85°C [1)] Storage temperature: -45°C ~ +90°C
Firmware Upgrade	USB interface (by default) and UART interface.
RoHS	All hardware components are fully compliant with EU RoHS directive.

NOTES

1. "[1)]" means when the module works within this temperature range, RF performance might degrade. For example, the frequency error or the phase error would increase.
2. "*" means this feature is under development.

2.4. Functional Diagram

The following figure shows a block diagram of UC15 and illustrates the major functional parts.

- Power management unit
- Baseband
- DDR+NAND flash
- Radio frequency
- Peripheral interface

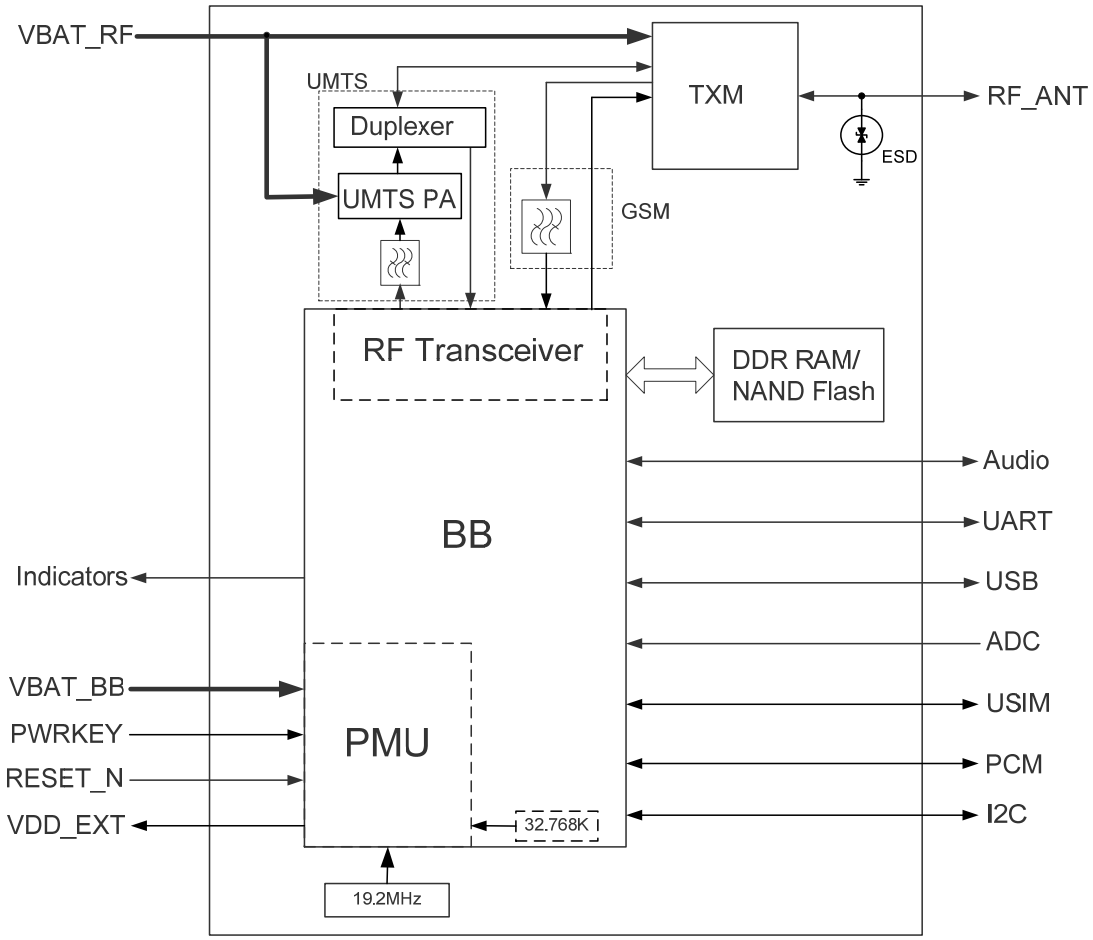

Figure 1: Functional Diagram

2.5. Evaluation Board

In order to help you to develop applications with UC15, Quectel supplies an evaluation board (EVB), RS-232 to USB cable, USB data cable, power adapter, earphone, antenna and other peripherals to control or test the module. For details, please refer to ***document [2].***

3 Application Interface

3.1. General Description

UC15 is equipped with a 68-pin 1.3mm pitch SMT pads plus 40-pin ground pads and reserved pads that connect to cellular application platform. Sub-interfaces included in these pads are described in details in the following chapters:

- Power supply
- UART interface
- Audio interface
- PCM interface
- USIM interface
- USB interface
- ADC interface
- Indicator interface

3.2. Pin Assignment

The following figure shows the pin assignment of the UC15 module.

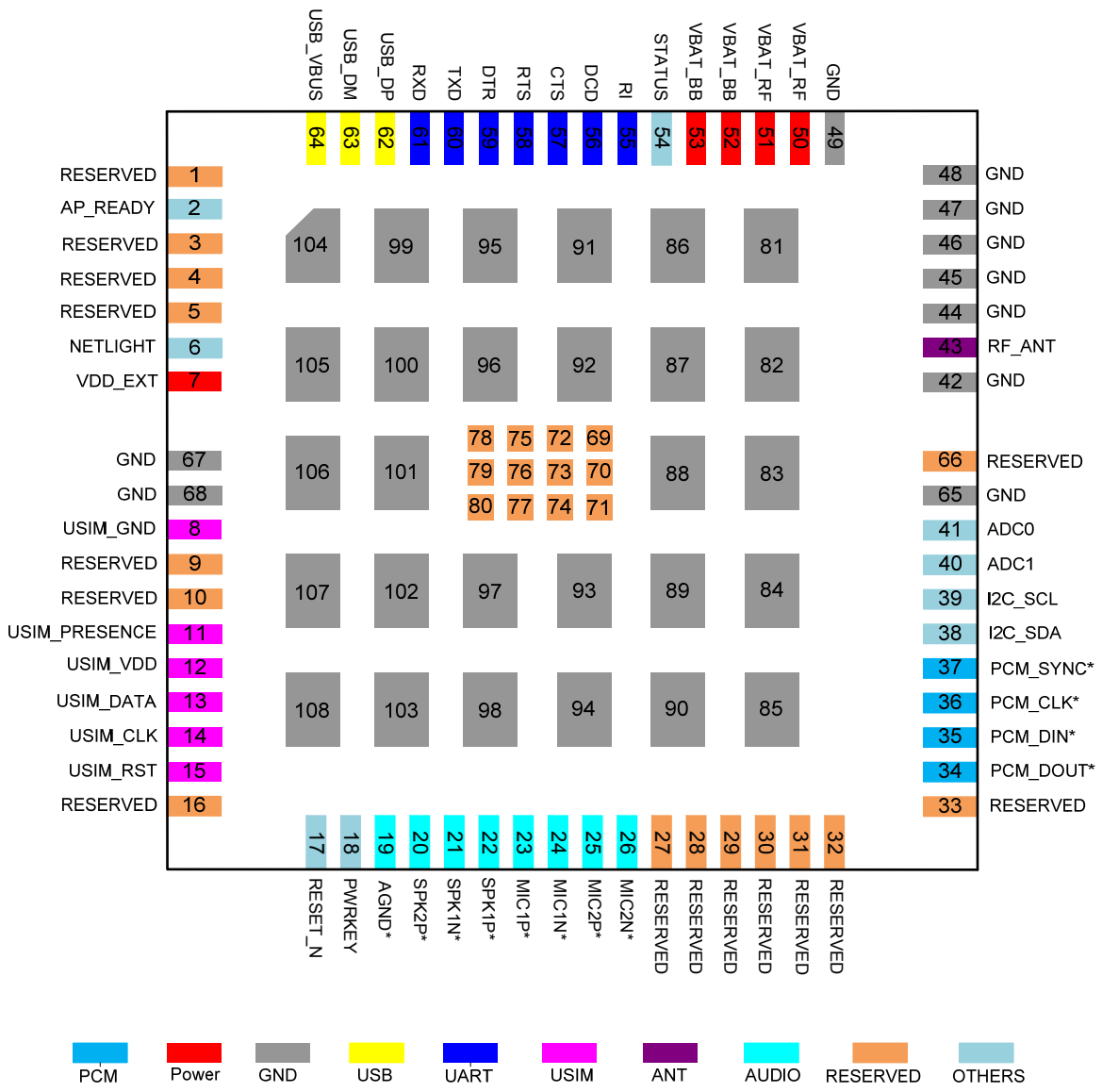

Figure 2: Pin Assignment (Top View)

NOTES

1. Keep all RESERVED pins and unused pins unconnected.
2. GND pads 81~108 should be connected to ground in the design, and RESERVED pads 69~80 should be unconnected.
3. "*" means these functions are only supported in Telematics version. Meanwhile, PCM function is still under development.

3.3. Pin Description

The pin definition of UC15 is shown in table 4.

Table 3: IO Parameters Definition

Type	Description
IO	Bidirectional input/output
DI	Digital input
DO	Digital output
PI	Power input
PO	Power output
AI	Analog input
AO	Analog output

Table 4: Pin Description

Power Supply					
Pin Name	**Pin No.**	**I/O**	**Description**	**DC Characteristics**	**Comment**
VBAT_BB	52,53	PI	Power supply for module baseband part.	Vmax=4.3V Vmin=3.3V Vnorm=3.8V	It must be able to provide sufficient current up to 0.8A.
VBAT_RF	50,51	PI	Power supply for module RF part.	Vmax=4.3V Vmin=3.3V Vnorm=3.8V	It must be able to provide sufficient current in a transmitting burst which typically rises to 2.0A.
VDD_EXT	7	PO	Provide 2.6V for external circuit.	Vnorm=2.6V $I_O$max=100mA	It is recommend to add a 2.2~4.7uF bypass capacitor when using this pin for power supply.

GND	42,44~49 65,67~68 ,81~108		Ground.		
Turn On/Off					
Pin Name	**Pin No.**	**I/O**	**Description**	**DC Characteristics**	**Comment**
PWRKEY	18	DI	Turn on/off the module.	R_{PU}≈200kΩ V_{IH}max=2.1V V_{IH}min=1.3V V_{IL}max=0.5V	Pull-up to 1.8V internally.
RESET_N	17	DI	Reset the module.	V_{IH}max=2.1V V_{IH}min=1.3V V_{IL}max=0.5V	Pull-up to 1.8V internally.
Indication					
Pin Name	**Pin No.**	**I/O**	**Description**	**DC Characteristics**	**Comment**
STATUS	54	DO	Indicate the module operating status.	V_{OH}max=2.6V V_{OH}min=2.15V V_{OL}max=0.45V	2.6V power domain.
NETLIGHT	6	DO	Indicate the module network activity status.	V_{OH}max=2.6V V_{OH}min=2.15V V_{OL}max=0.45V	2.6V power domain.
USB Interface					
Pin Name	**Pin No.**	**I/O**	**Description**	**DC Characteristics**	**Comment**
USB_VBUS	64	PI	USB detection.	Vmax=5.25V Vmin=3.0V Vnorm=5.0V	
USB_DP	62	IO	USB differential data bus.	Compliant with USB 2.0 standard specification.	Require differential impedance of 90Ω.
USB_DM	63	IO	USB differential data bus.	Compliant with USB 2.0 standard specification.	Require differential impedance of 90Ω.
USIM Interface					
Pin Name	**Pin No.**	**I/O**	**Description**	**DC Characteristics**	**Comment**

USIM_GND	8		Specified ground for USIM card.		
USIM_VDD	12	PO	Power supply for USIM card.	For 1.8V USIM: Vmax=1.95V Vmin=1.65V For 3.0V USIM: Vmax=3.0V Vmin=2.7V	Either 1.8V or 3.0V is supported by the module automatically.
USIM_DATA	13	IO	Data signal of USIM card.	For 1.8V USIM: V_{IL}max = 0.6V V_{IH}min =1.2V V_{OL}max=0.45V V_{OH}min=1.35V For 3.0V USIM: V_{IL}max=1.0V V_{IH}min=1.95V V_{OL}max=0.45V V_{OH}min=2.55V	Pull-up to USIM_VDD with 10k resistor internally.
USIM_CLK	14	DO	Clock signal of USIM card.	For 1.8V USIM: V_{OL}max=0.45V V_{OH}min=1.35V For 3.0V USIM: V_{OL}max=0.45V V_{OH}min=2.55V	
USIM_RST	15	DO	Reset signal of USIM card.	For 1.8V USIM: V_{OL}max=0.45V V_{OH}min=1.35V For 3.0V USIM: V_{OL}max=0.45V V_{OH}min=2.55V	
USIM_ PRESENCE	11	DI	USIM card input detection.	V_{IL}min=-0.3V V_{IL}max=0.91V V_{IH}min=1.69V V_{IH}max=2.9V	2.6V power domain.
ADC Interface					
Pin Name	**Pin No.**	**I/O**	**Description**	**DC Characteristics**	**Comment**

ADC0	41	AI	General purpose analog to digital converter.	Voltage range: 0V to 2.1V	
ADC1	40	AI	General purpose analog to digital converter.	Voltage range: 0V to 2.1V	
UART Interface					
Pin Name	**Pin No.**	**I/O**	**Description**	**DC Characteristics**	**Comment**
RI	55	DO	Ring indicator.	V_{OL}max=0.45V V_{OH}min=2.15V	2.6V power domain.
DCD	56	DO	Data carrier detection.	V_{OL}max=0.45V V_{OH}min=2.15V	2.6V power domain.
CTS	57	DO	Clear to send.	V_{OL}max=0.45V V_{OH}min=2.15V	2.6V power domain.
RTS	58	DI	Request to send.	V_{IL}min=-0.3V V_{IL}max=0.91V V_{IH}min=1.69V V_{IH}max=2.9V	2.6V power domain.
DTR	59	DI	Data terminal ready.	V_{IL}min=-0.3V V_{IL}max=0.91V V_{IH}min=1.69V V_{IH}max=2.9V	2.6V power domain. Pull-up by default.
TXD	60	DO	Transmit data.	V_{OL}max=0.45V V_{OH}min=2.15V	2.6V power domain.
RXD	61	DI	Receive data.	V_{IL}min=-0.3V V_{IL}max=0.91V V_{IH}min=1.69V V_{IH}max=2.9V	2.6V power domain.
RF Interface					
Pin Name	**Pin No.**	**I/O**	**Description**	**DC Characteristics**	**Comment**
RF_ANT	43	IO	RF antenna pad.	50Ω impedance.	
Analog Audio Interface					
Pin Name	**Pin No.**	**I/O**	**Description**	**DC Characteristics**	**Comment**
MIC1P	23	AI	Audio positive input.		
MIC1N	24	AI	Audio negative input.		

MIC2P	25	AI	Auxiliary audio positive input.		
MIC2N	26	AI	Auxiliary audio negative input.		
SPK1P	22	AO	Audio positive output.		
SPK1N	21	AO	Audio negative output.		
SPK2P	20	AO	Auxiliary audio positive output.		
AGND	19		Analog ground.	Ground.	Separate ground for external audio circuits.
PCM Interface					
Pin Name	**Pin No.**	**I/O**	**Description**	**DC Characteristics**	**Comment**
PCM_DOUT	34	DO	PCM data output.	V_{OL}max=0.45V V_{OH}min=2.15V	2.6V power domain.
PCM_DIN	35	DI	PCM data input.	V_{IL}min=-0.3V V_{IL}max=0.91V V_{IH}min=1.69V V_{IH}max=2.9V	2.6V power domain.
PCM_CLK	36	IO	PCM data bit clock.	V_{IL}min=-0.3V V_{IL}max=0.91V V_{IH}min=1.69V V_{IH}max=2.9V V_{OL}max=0.45V V_{OH}min=2.15V	2.6V power domain.
PCM_SYNC	37	IO	PCM data frame sync signal	V_{OL}max=0.45V V_{OH}min=2.15V	2.6V power domain.
I2C Interface					
Pin Name	**Pin No.**	**I/O**	**Description**	**DC Characteristics**	**Comment**
I2C_SDA	38	IO	I2C serial data.	V_{IL}min=-0.3V V_{IL}max=0.91V V_{IH}min=1.69V V_{IH}max=2.9V V_{OL}max=0.45V V_{OH}min=2.15V	External pull-up resistor is required. 2.6V only.
I2C_SCL	39	DO	I2C serial clock.	V_{OL}max=0.45V V_{OH}min=2.15V	External pull-up resistor is required.

					2.6V only.
Other Pins					
Pin Name	**Pin No.**	**I/O**	**Description**	**DC Characteristics**	**Comment**
AP_READY	2	DI	Application process or sleep state detection.	V_{IL}min=-0.3V V_{IL}max=0.91V V_{IH}min=1.69V V_{IH}max=2.9V	2.6V power domain.
RESERVED	1,3~5,9~10,16,27~33,66,69~80		Reserved.		Keep these pins unconnected.

3.4. Operating Modes

The table below briefly summarizes the various operating modes.

Table 5: Overview of Operating Modes

Mode	Details	
Normal Operation	GSM Idle	Software is active. The module has registered to the GSM network and is ready to send and receive data.
	GSM Talk/Data	GSM connection is ongoing. In this mode, the power consumption is decided by the configuration of power control level (PCL), dynamic DTX control and the working RF band.
	GPRS Idle	The module is ready for GPRS data transfer, but no data transfer is going on. In this case, power consumption depends on network setting and GPRS configuration.
	GPRS Data	There is GPRS data in transfer (PPP, TCP or UDP). In this mode, power consumption is decided by the PCL, working RF band and GPRS multi-slot configuration.
	EDGE Idle	The module is ready for data transfer in EDGE mode, but no data is currently sent or received. In this case, power consumption depends on network settings and EDGE configuration.
	EDGE Data	There is EDGE data in transfer (PPP, TCP or UDP). In this mode, power consumption is decided by the PCL, working RF band and EDGE multi-slot configuration.

	UMTS Idle	Software is active. The module has registered to the UMTS network and the module is ready to send and receive data.
	UMTS Talk/Data	UMTS connection is ongoing. In this mode, the power consumption is decided by network setting (e.g. TPC pattern) and data transfer rate.
	HSDPA Idle	Software is active. The module has registered to the HSDPA network and the module is ready to send and receive data.
	HSDPA Data	HSDPA data transfer is ongoing. In this mode, the power consumption is decided by network setting (e.g. TPC pattern) and data transfer rate.
Minimum Functionality Mode	**AT+CFUN=0** command can set the module entering into a minimum functionality mode without removing the power supply. In this case, both RF function and USIM card will be invalid.	
Sleep Mode	In this mode, the current consumption of the module will be reduced to the minimal level. During this mode, the module can still receive paging message, SMS, voice call and TCP/UDP data from the network normally. Any URC can be output even the module in Sleep Mode.	
Power Down Mode	In this mode, the power management unit shuts down the power supply for the baseband part and RF part. Software is not active. The serial interface is not accessible. Operating voltage (connected to VBAT_RF and VBAT_BB) remains applied.	

3.5. Power Saving

3.5.1. Sleep Mode

UC15 is able to reduce its current consumption to a minimum value during the sleep mode. The following section describes power saving procedure of UC15.

3.5.1.1. UART Application

If application processor communicates with module via UART interface, the following preconditions can let the module enter into the sleep mode.

- Execute AT command **AT+QSCLK=1** to enable the sleep mode.
- Drive DTR to high level.

The following figure shows the connection between the module and application processor.

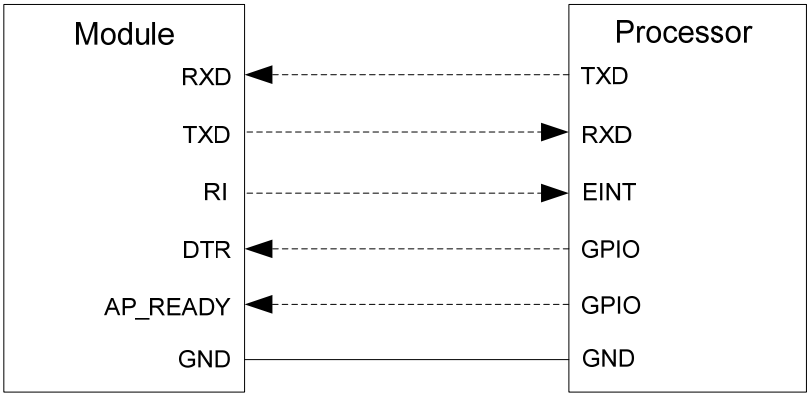

Figure 3: UART Sleep Application

The RI of module is used to wake up the processor, and AP_READY will detect the sleep state of processor (can be configured to high level or low level detection). You should pay attention to the level match shown in dotted line between module and processor.

Drive DTR to low level will wake up the module.

3.5.1.2. USB Application with Suspend Function

If application processor communicates with module via USB interface, and processor supports USB suspend function, following preconditions can let the module enter into the sleep mode.

- Execute AT command **AT+QSCLK=1** to enable the sleep mode.
- The processor's USB bus which is connected with the module USB interface enters into suspended state.

The following figure shows the connection between the module and processor.

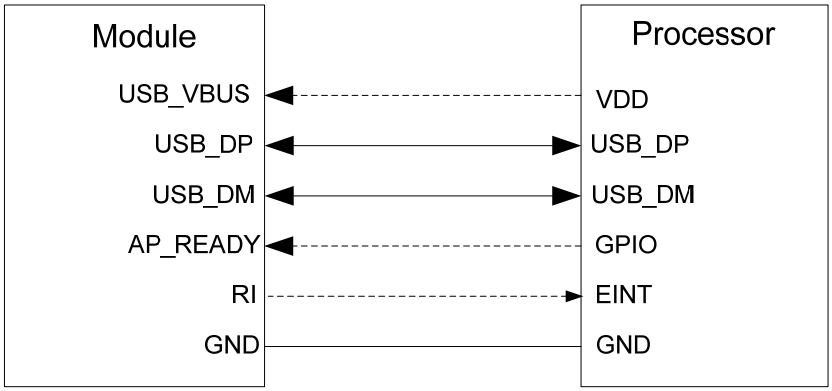

Figure 4: USB Application with Suspend Function

When the processor's USB bus returns to resume state, the module will be woken up.

3.5.1.3. USB Application without Suspend Function

If application processor communicates with module via USB interface, and processor does not support USB suspend function, you should disconnect USB_VBUS with additional control circuit to let the module enter into sleep mode.

- Execute AT command **AT+QSCLK=1** to enable the sleep mode.
- Disconnect USB_VBUS.

The following figure shows the connection between the module and application processor.

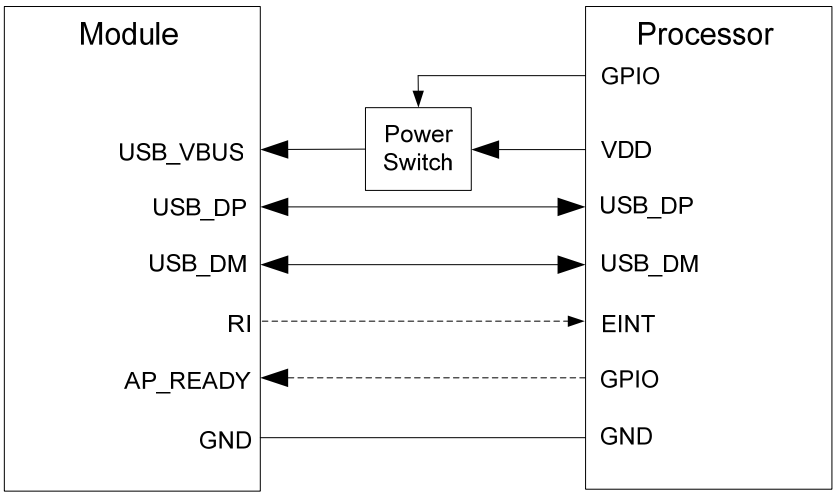

Figure 5: USB Sleep Application without Suspend Function

Supply power to USB_VBUS will wake up the module.

In sleep mode, the module can still receive paging message, SMS, voice call and TCP/UDP data from the network normally, but the UART port is not accessible.

3.5.2. Minimum Functionality Mode

Minimum functionality mode reduces the functionality of the module to minimum level, thus minimizes the current consumption at the same time. This mode can be set as below:

Command **AT+CFUN** provides the choice of the functionality levels: <fun>=0, 1, 4.

- **AT+CFUN=0**: Minimum functionality, RF part and USIM card will be closed.
- **AT+CFUN=1**: Full functionality (by default).

- **AT+CFUN=4**: Disable RF function (airplane mode). All AT commands related to RF function are not accessible.

For detailed information about command **AT+CFUN**, please refer to ***document [1]***.

3.6. Power Supply

3.6.1. Power Supply Pins

UC15 provides four VBAT pins to connect with the external power supply. There are two separate voltage domains for VBAT.

- VBAT_RF with two pads for module RF.
- VBAT_BB with two pads for module baseband.

The following table shows the VBAT pins and ground pins.

Table 6: VBAT and GND Pin

Pin Name	Pin No.	Description	Min.	Typ.	Max.	Unit
VBAT_RF	50,51	Power supply for module RF.	3.3	3.8	4.3	V
VBAT_BB	52,53	Power supply for module baseband.	3.3	3.8	4.3	V
GND	42,44~49,65, 67~68,81~108	Ground.	-	-	-	-

3.6.2. Decrease Voltage Drop

The power supply range of the module is 3.3~4.3V. Because of the voltage drop during the transmitting time, a bypass capacitor of about 100μF with low ESR should be used. Multi-layer ceramic chip (MLCC) capacitor can provide the best combination of low ESR. Three ceramic capacitors (100nF, 33pF, 10pF) are recommended to be applied to the VBAT pins. The capacitors should be placed close to the VBAT pins of UC15. The following figure shows star structure of the power supply.

The main power supply from an external application should be a single voltage source and has to be expanded to two sub paths with star structure. In addition, in order to get a stable power source, it is suggested to use a zener diode of which reverse zener voltage is 5.1V and dissipation power is more than 0.5W.

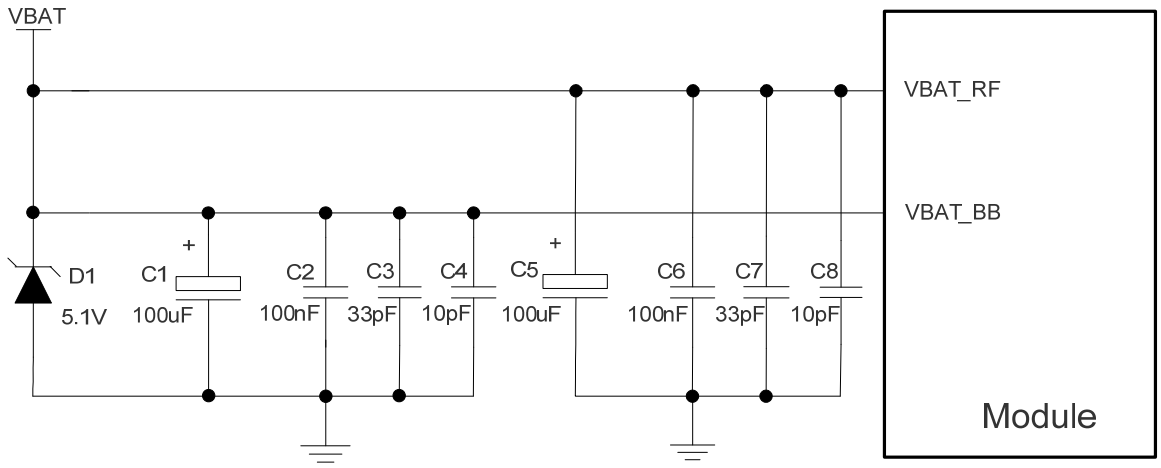

Figure 6: Star Structure of the Power Supply

Please pay special attention to the power supply design for applications. Make sure the input voltage will never drop below 3.3V. If the voltage drops below 3.3V, the module will turn off automatically. The PCB traces from the VBAT pins to the power source must be wide enough to ensure that there is not too much voltage drop occurs in the transmitting procedure. The width of VBAT_BB trace should be no less than 1mm, and the width of VBAT_RF trace should be no less than 2mm, and the principle of the VBAT trace is the longer, the wider.

3.6.3. Reference Design for Power Supply

The power design for the module is very important, since the performance of power supply for the module largely depends on the power source. The power supply is capable of providing the sufficient current up to 2A at least. If the voltage drop between the input and output is not too high, it is suggested to use a LDO to supply power for module. If there is a big voltage difference between the input source and the desired output (VBAT), a buck converter is preferred to be used as a power supply.

The following figure shows a reference design for +5V input power source. The designed output for the power supply is 3.88V and the maximum load current is 3A.

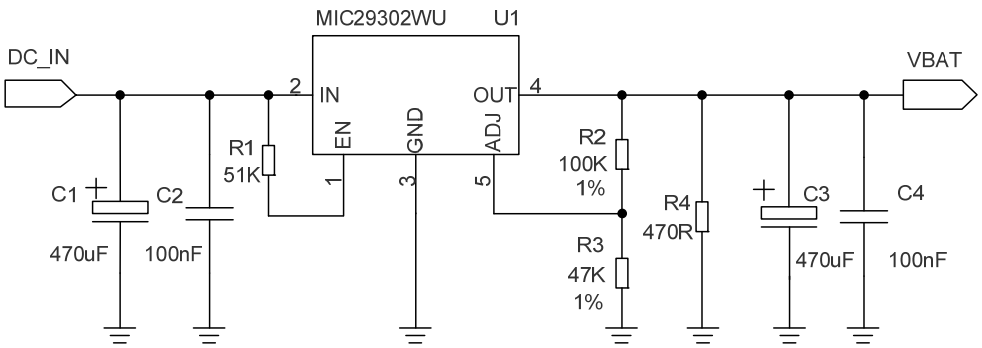

Figure 7: Reference Circuit of Power Supply

3.6.4. Monitor the Power Supply

You can use the **AT+CBC** command to monitor the VBAT_BB voltage value. For more details, please refer to ***document [1].***

3.6.5. VDD_EXT

UC15 has a LDO power output, named VDD_EXT. The VDD_EXT is available and output voltage is 2.6V by default, rated at 100mA.

The following table shows electrical characteristics of VDD_EXT.

Table 7: Electrical Characteristics of VDD_EXT

Symbol	Description	Min.	Typ.	Max.	Unit
VDD_EXT	Output voltage	2.5	2.6	2.7	V
I_{OUT}	Output current	-	-	100	mA

3.7. Turn on and off Scenarios

3.7.1. Turn on Module by PWRKEY Pin

The following table shows the pin definition of PWRKEY.

Table 8: PWRKEY Pin Description

Pin Name	Pin No.	Description	DC Characteristics	Comment
PWRKEY	18	Turn on/off the module.	V_{IH}max=2.1V V_{IH}min=1.3V V_{IL}max=0.5V	Pull-up to 1.8V internally with 200kΩ resistor.

When UC15 is in power down mode, it can be turned on to normal mode by driving the PWRKEY pin to low level at least 0.1s. It is recommended to use an open collector driver to control the PWRKEY. You can monitor the level of the STATUS pin to judge whether the module is turned on or not. After STATUS pin outputting a high level, module is turned on. A simple reference circuit is illustrated in the following figure.

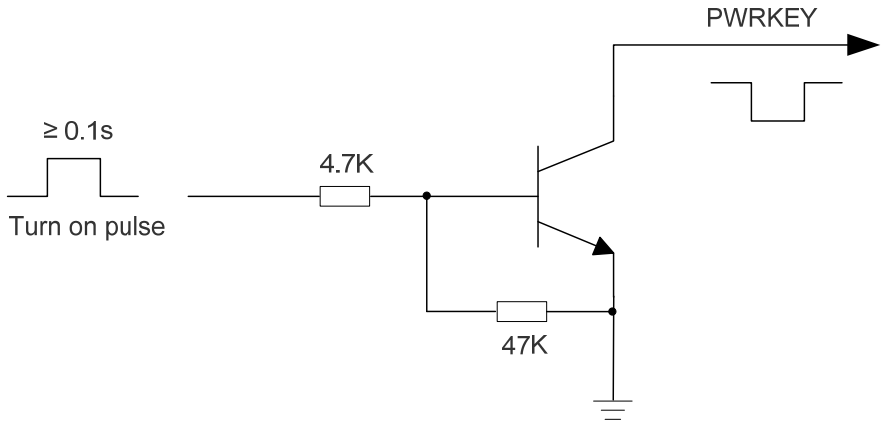

Figure 8: Turn on the Module by Driving Circuit

The other way to control the PWRKEY is to use a button directly. A TVS component is indispensable to be placed nearby the button for ESD protection. When pressing the key, electrostatic strike may generate from finger. A reference circuit is shown in the following figure.

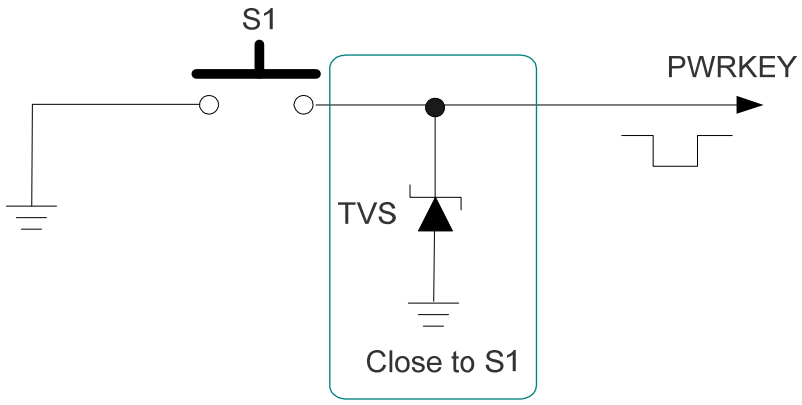

Figure 9: Turn on the Module by Keystroke

The turn on scenarios is illustrated as the following figure.

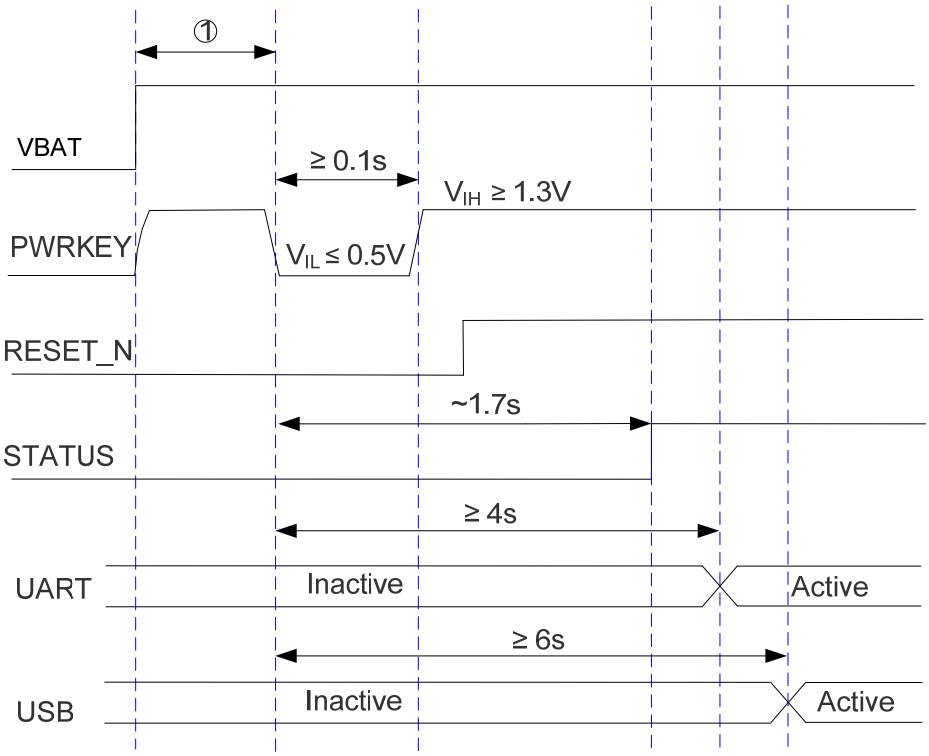

Figure 10: Timing of Turning on Module

NOTE

① Make sure that VBAT is stable before pulling down PWRKEY pin. The time between them is recommended to be more than 0.03s.

3.7.2. Turn off Module

The following procedures can be used to turn off the module:

- Normal power down procedure: Turn off the module by PWRKEY pin.
- Normal power down procedure: Turn off the module by command **AT+QPOWD**.
- Automatic shutdown: Turn off the module automatically if under-voltage or over-voltage is detected.

3.7.2.1. Turn off Module by PWRKEY Pin

Drive the PWRKEY to low level at least 0.6s, the module will execute power-down procedure after PWRKEY is released. The power-down scenario is illustrated as the following figure.

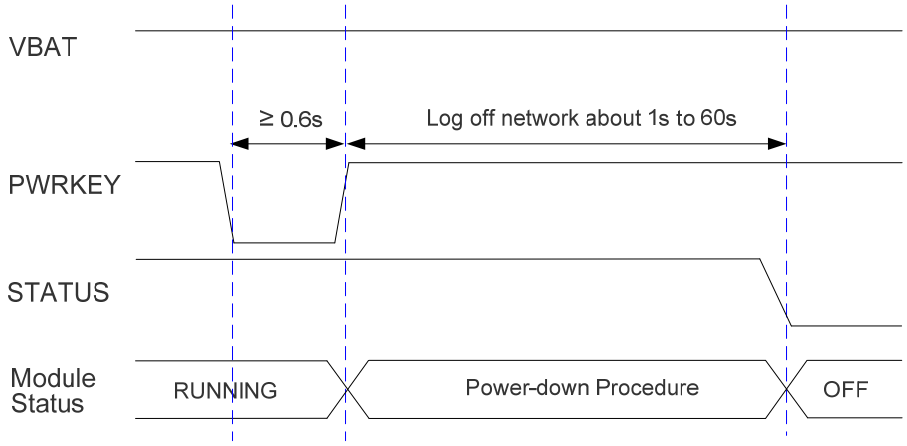

Figure 11: Timing of Turning off Module

During power-down procedure, module will send out URC “NORMAL POWER DOWN” via URC port first, then log off network and save important data. After logging off, module sends out “POWERED DOWN” and shuts down the internal power supply. The power on VBAT pins are not allowed to be switched off before the URC “POWERED DOWN” is output to avoid data loss. If module is not logged off within 60s, module will force to shut down internal power supply.

After that moment, the module enters into power down mode, no other AT commands can be executed. The power down mode can also be indicated by the STATUS pin.

3.7.2.2. Turn off Module by AT Command

It is also a safe way to use AT command **AT+QPOWD** to turn off the module, which is similar to the way of turning off the module via PWRKEY Pin. Please refer to ***document [1]*** for details about the AT command of **AT+QPOWD**.

3.7.2.3. Automatic Shutdown

The module will constantly monitor the voltage applied on the VBAT_BB, if the voltage ≤ 3.5V, the following URC will be presented:

+QIND: “vbatt”,-1

If the voltage ≥ 4.21V, the following URC will be presented:

+QIND: “vbatt”,1

The uncritical voltage is 3.3V to 4.3V, If the voltage > 4.35V or < 3.2V, the module would automatically shut down itself.

If the voltage < 3.2V, the following URC will be presented:

+QIND: "vbatt",-2

If the voltage > 4.35V, the following URC will be presented:

+QIND: "vbatt",2

NOTE

The value of voltage threshold can be revised by AT command **AT+QCFG="vbatt"**, refer to ***document [1]*** for details.

3.8. Reset the Module

The RESET_N can be used to reset the module.

Table 9: RESET_N Pin Description

Pin Name	Pin No.	Description	DC Characteristics	Comment
RESET_N	17	Reset the module.	V_{IH}max=2.1V V_{IH}min=1.3V V_{IL}max=0.5V	Pull-up to 1.8V internally.

You can reset the module by driving the RESET_N to low level voltage for 0.05~0.2s and then releasing. A reference circuit is shown in the following figure.

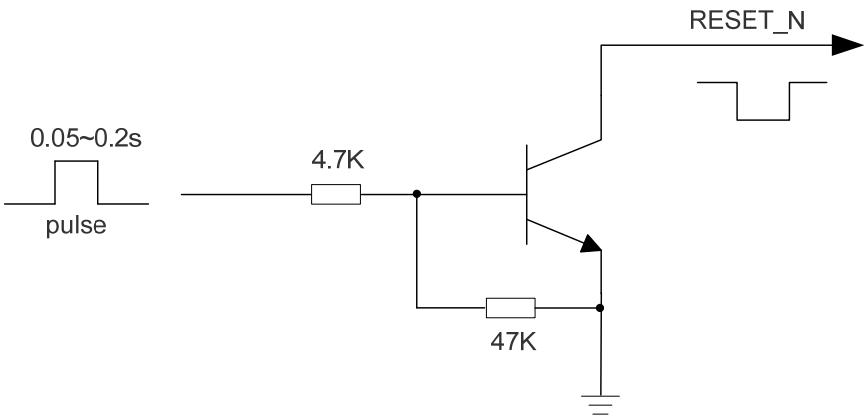

Figure 12: Reference Circuit of RESET_N

The reset scenario is illustrated as the following figure.

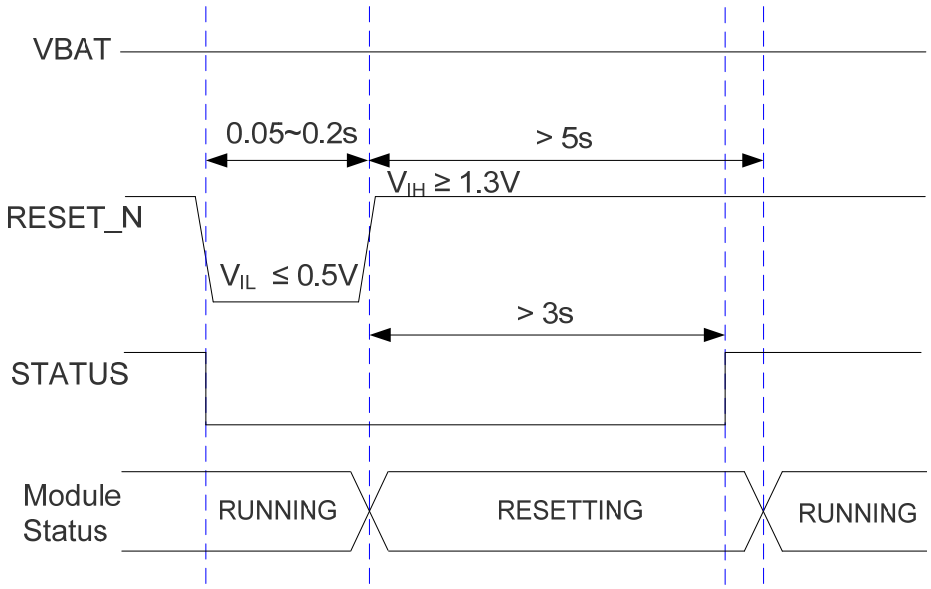

Figure 13: Timing of Resetting Module

NOTE

The low-level pulse through the RESET_N pin cannot last for more than 0.2s, otherwise the module will be powered off.

3.9. UART Interface

The module provides one 7-wire UART interface, and is designed as the DCE (Data Communication Equipment), following the traditional DCE-DTE (Data Terminal Equipment) connection. UART interface supports 300, 600, 1200, 2400, 4800, 9600, 19200, 38400, 57600, 115200, 230400, 460800 and 921600bps baud rate. The default is 115200bps, while autobauding is not supported. This interface can be used for data transmission, AT communication and firmware upgrade.

Table 10: Pin Definition of the UART Interface

Pin Name	Pin No.	I/O	Description	Comment
RI	55	DO	Ring indicator.	2.6V power domain.
DCD	56	DO	Data carrier detection.	2.6V power domain.

CTS	57	DO	Clear to send.	2.6V power domain.
RTS	58	DI	Request to send.	2.6V power domain.
DTR	59	DI	Data terminal ready.	2.6V power domain.
TXD	60	DO	Transmit data.	2.6V power domain.
RXD	61	DI	Receive data.	2.6V power domain.

The logic levels are described in the following table.

Table 11: Logic Levels of Digital I/O

Parameter	Min.	Max.	Unit
V_{IL}	-0.3	0.91	V
V_{IH}	1.69	2.9	V
V_{OL}	0	0.45	V
V_{OH}	2.15	2.6	V

3.9.1. The Connection of UART

The connection between module and host via UART port is very flexible. Three connection ways are illustrated as below.

UART port connection is shown as below when it is applied in modulation-demodulation.

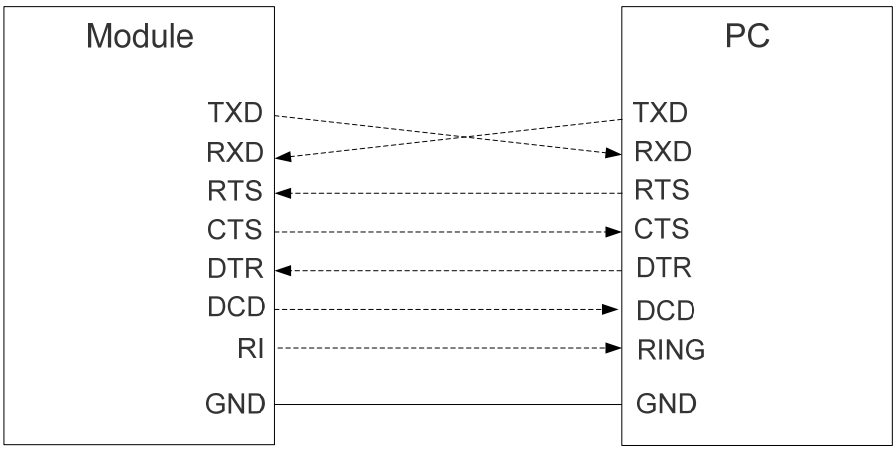

Figure 14: Connection of Full Functional UART Port

Three lines connection is shown as below.

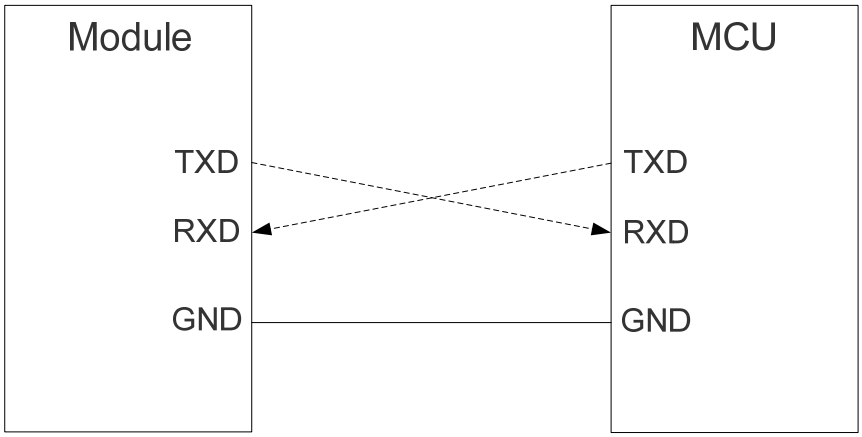

Figure 15: Connection of Three Lines UART Port

UART port with hardware flow control is shown as below. This connection will enhance the reliability of the mass data communication.

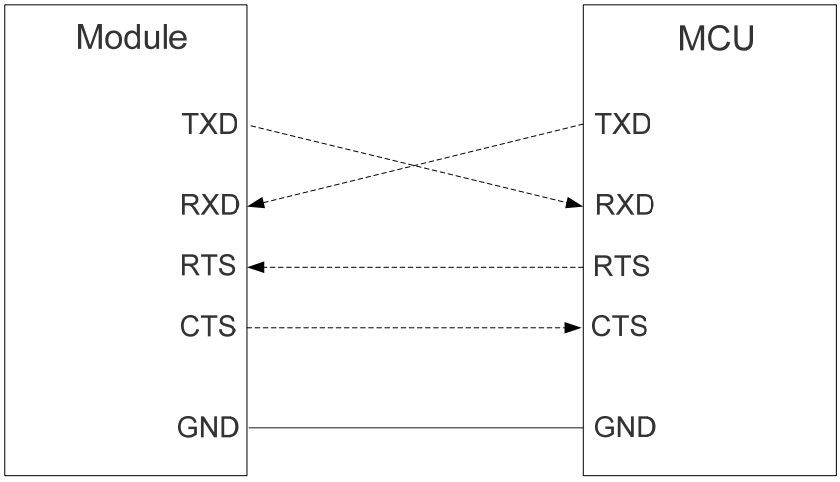

Figure 16: Connection of UART Port with Hardware Flow Control

NOTE

The module disables the hardware flow control by default. AT command **AT+IFC=2,2** is used to enable hardware flow control. AT command **AT+IFC=0,0** is used to disable the hardware flow control. For more details, please refer to ***document [1]***.

3.9.2. UART Application

The reference design of 3.3V level match is shown as below. When the peripheral MCU/ARM system is 3V, the divider resistor should be changed from 3.6K to 6.8K.

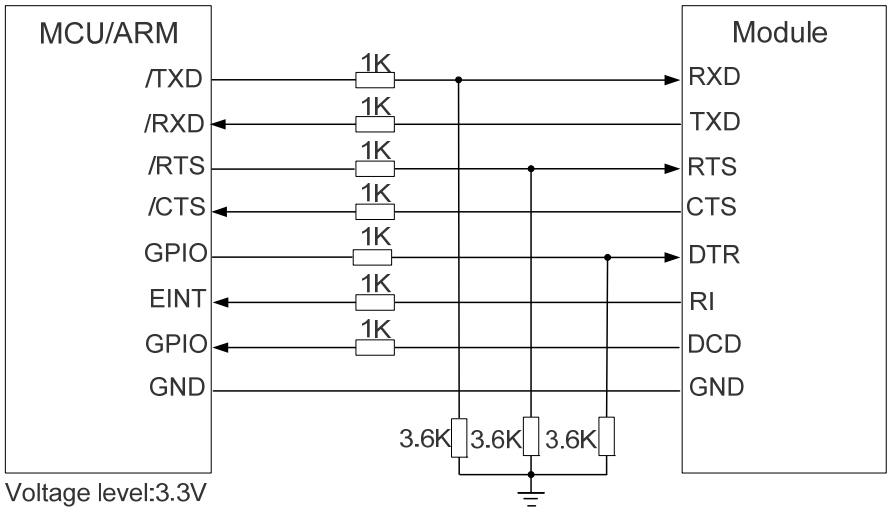

Figure 17: 3.3V Level Match Circuit

The reference design of 5V level match is shown as below. The construction of dotted line can refer to the construction of solid line. Please pay attention to direction of connection. Input dotted line of module should refer to input solid line of the module. Output dotted line of module should refer to output solid line of the module.

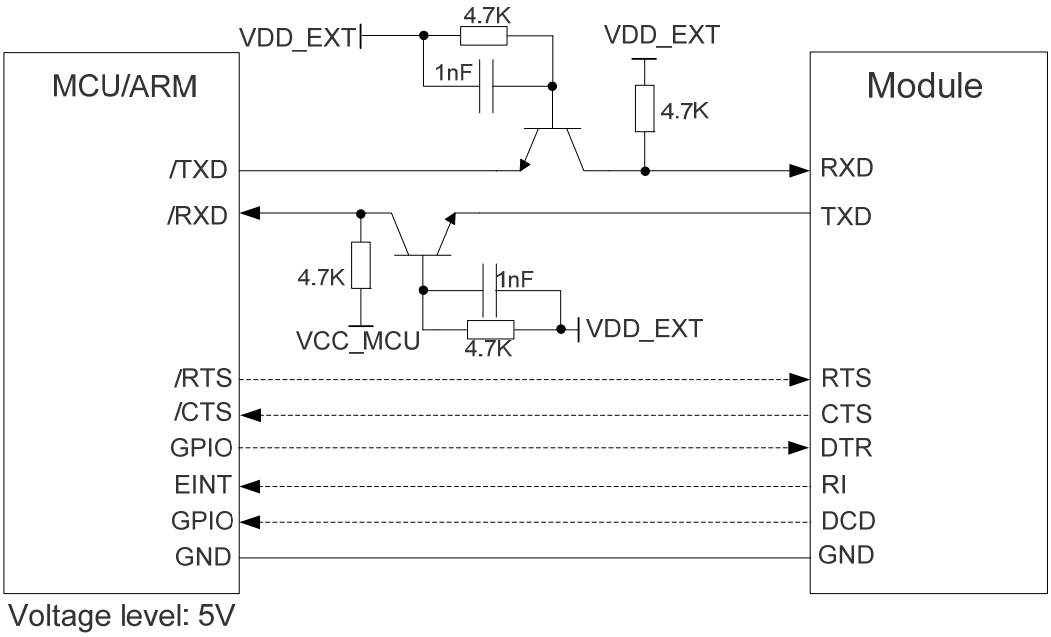

Figure 18: 5V Level Match Circuit

The following figure is an example of connection between module and PC. A RS232 level shifter IC or circuit must be inserted between module and PC, since UART interface do not support the RS232 level, while support the CMOS level only.

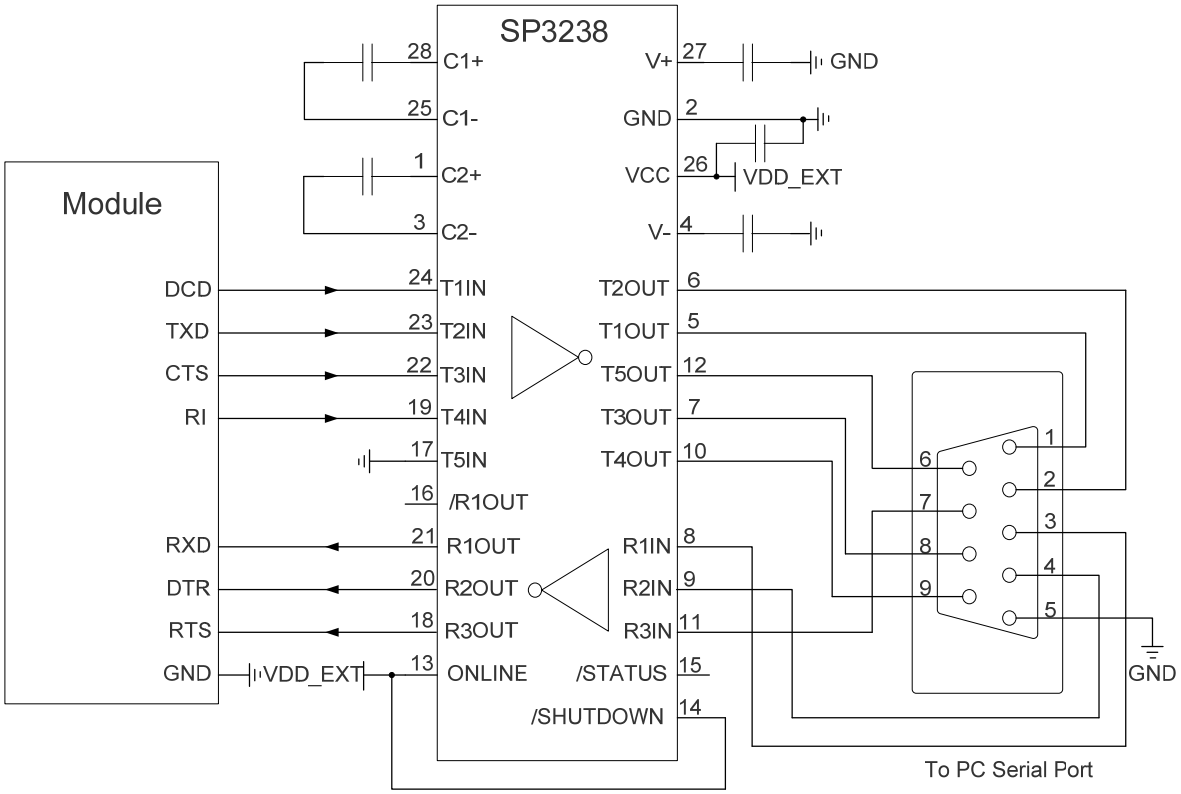

Figure 19: RS232 Level Shift Circuit

NOTES

1. Rising edge on DTR will let the module exit from the data mode by default. It can be disabled by command. Refer to ***document [1]*** about **AT&D** and **AT&V** for details.
2. DCD is used as data mode indication. Please refer to ***document [1]*** about command **AT&C** and **AT&V** for details.

3.10. Behavior of the RI

You can use command **AT+QCFG="risignaltype", "physical"** to configure RI behavior:

No matter which port URC is presented on, URC will trigger the behavior on RI pin.

NOTE

URC can be output from UART port, USB AT port and USB modem port by command **AT+QURCCFG**. The default port is USB AT port.

In additional, RI behavior can be configured flexible. The default behavior of the RI is shown as below.

Table 12: Behavior of the RI

State	Response
Idle	RI keeps in high level.
URC	RI outputs 120ms low pulse when new URC is reported.

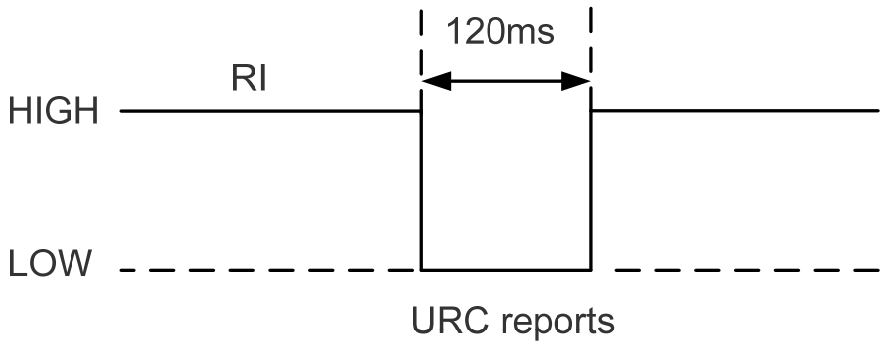

Figure 20: RI Behavior

The RI behavior can be changed by command **AT+QCFG="urc/ri/ring"**, refer to ***document [1]*** for details.

3.11. Analog Audio Interface

The module provides two analog input channels and two analog output channels.

Table 13: Pin Definition of the Audio Interface

Interface	Pin Name	Pin No.	I/O	Description	Comment
AIN1/	MIC1P	23	AI	Audio positive input.	If it is unused, keep open.

AOUT1	MIC1N	24	AI	Audio negative input.	If it is unused, keep open.
	SPK1P	22	AO	Audio positive output.	If it is unused, keep open.
	SPK1N	21	AO	Audio negative output.	If it is unused, keep open.
AIN2/ AOUT2	MIC2P	25	AI	Auxiliary audio positive input.	If it is unused, keep open.
	MIC2N	26	AI	Auxiliary audio negative input.	If it is unused, keep open.
	SPK2P	20	AO	Auxiliary audio positive output.	If it is unused, keep open.
	AGND	19		Analog ground.	Suggested to be used for audio circuit.

- AIN1 and AIN2 may be used for both microphone and line inputs. An electret microphone is usually recommended. AIN1 and AIN2 are both differential input channels.

- AOUT1 and AOUT2 may be used for both receiver and speaker outputs. AOUT1 channel is typically used for a receiver, while AOUT2 channel is typically used for headset or speaker. AOUT1 channel is a differential channel and AOUT2 is a single-ended channel. SPK2P and AGND can establish a pseudo differential mode. Both AOUT1 and AOUT2 support voice and ringtone output, and so on.

- These two audio channels can be swapped by **AT+QAUDPATH** command. For more details, please refer to ***document [1].***

  Use command **AT+QAUDPATH** to select audio channel:

  0: AIN1/AOUT1 (normal audio channel), the default value is 0.
  1: AIN2/AOUT2 (auxiliary audio channel).
  2: PCM channel.

For each channel, you can use **AT+QMIC** to adjust the input gain level of microphone. You can also use **AT+CLVL** to adjust the output gain level of receiver and speaker. **AT+QSIDET** is to set the side-tone gain level. For more details, please refer to ***document [1]***.

3.11.1. Decrease TDD Noise and Other Noise

The 33pF capacitor is applied for filtering out 900MHz RF interference when the module is transmitting at GSM900/EGSM900MHz. TDD noise could be heard without this capacitor. Moreover, the 10pF capacitor here is for filtering out 1800/1900MHz RF interference. However, the self-resonant frequency point of a capacitor largely depends on the material and production technique. Therefore, customer should depend on its capacitor vendor to choose the most suitable capacitor for filtering out GSM850MHz and PCS1900MHz separately.

The severity degree of the RF interference in the voice channel during GSM transmitting period largely depends on the application design. In some cases, GSM850 TDD noise is more severe; while in other cases, PCS1900 TDD noise is more obvious. Therefore, customer can have a choice based on test results. Sometimes, even no RF filtering capacitor is required.

The capacitor which is used for filtering out RF noise should be close to audio interface. Audio alignment should be as short as possible.

In order to decrease radio or other signal interference, the position of RF antenna should be kept away from audio interface and audio alignment. Power alignment and audio alignment should not be parallel, and power alignment should be far away from audio alignment.

The differential audio traces should be placed according to the differential signal layout rules.

3.11.2. Microphone Interfaces Application

AIN1/AIN2 channels come with internal bias supply for external electret microphone. A reference circuit is shown in the following figure.

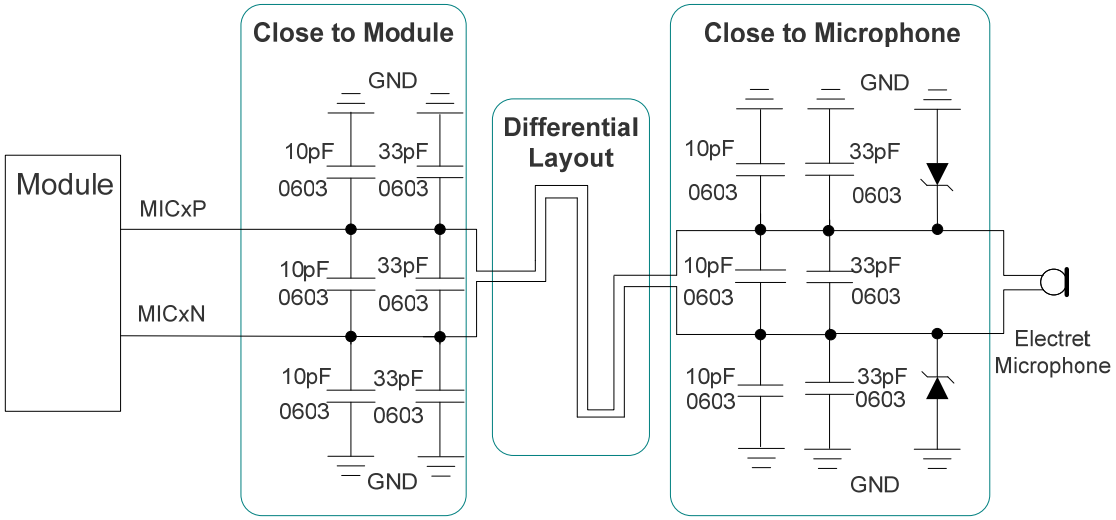

Figure 21: Microphone Reference Design for AIN1&AIN2

3.11.3. Receiver and Speaker Interface Application

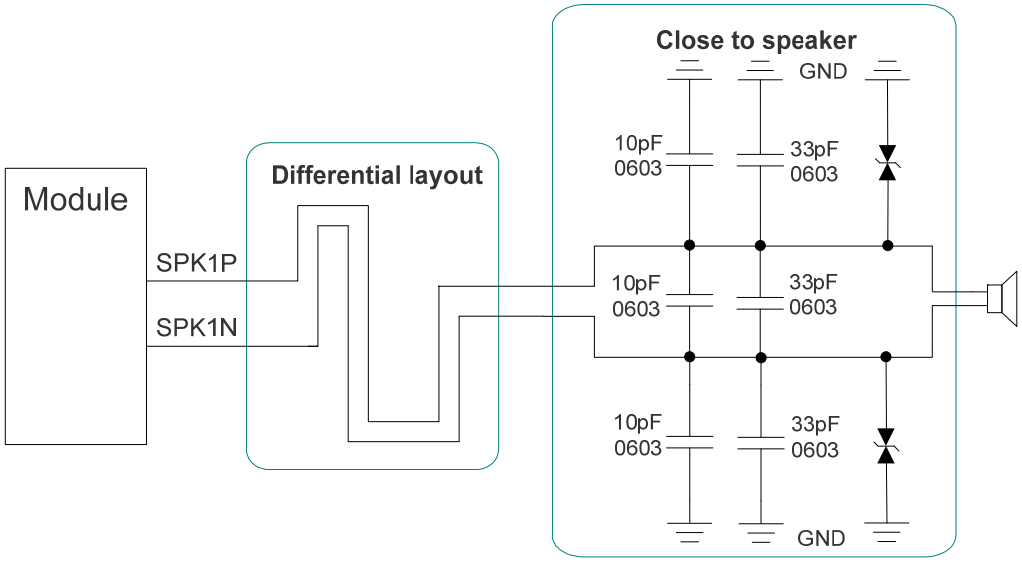

Figure 22: Reference Design for AOUT1

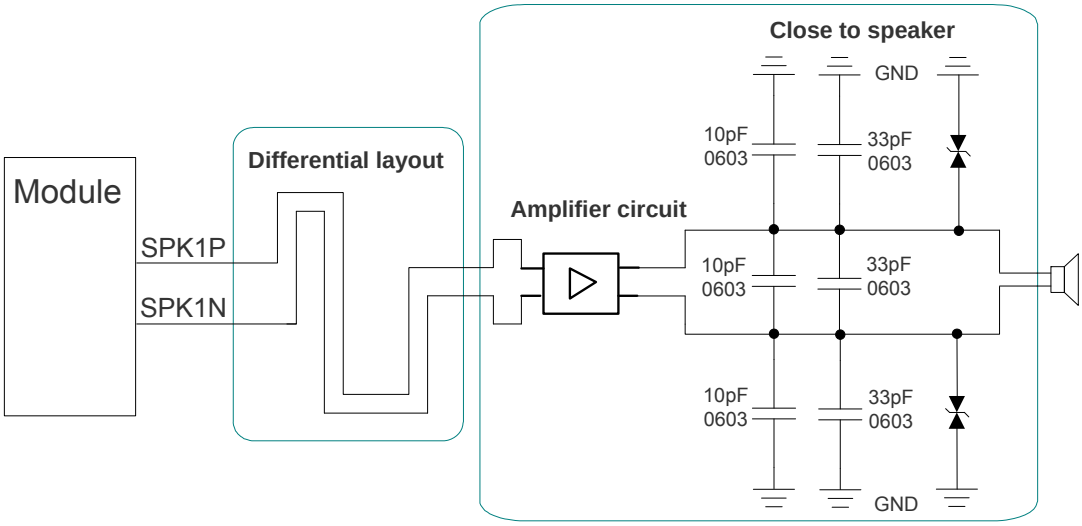

Figure 23: Reference Design with an Amplifier for AOUT1

Texas Instruments TPA6205A1 is recommended for a suitable differential audio amplifier. There are plenty of excellent audio amplifiers in the market.

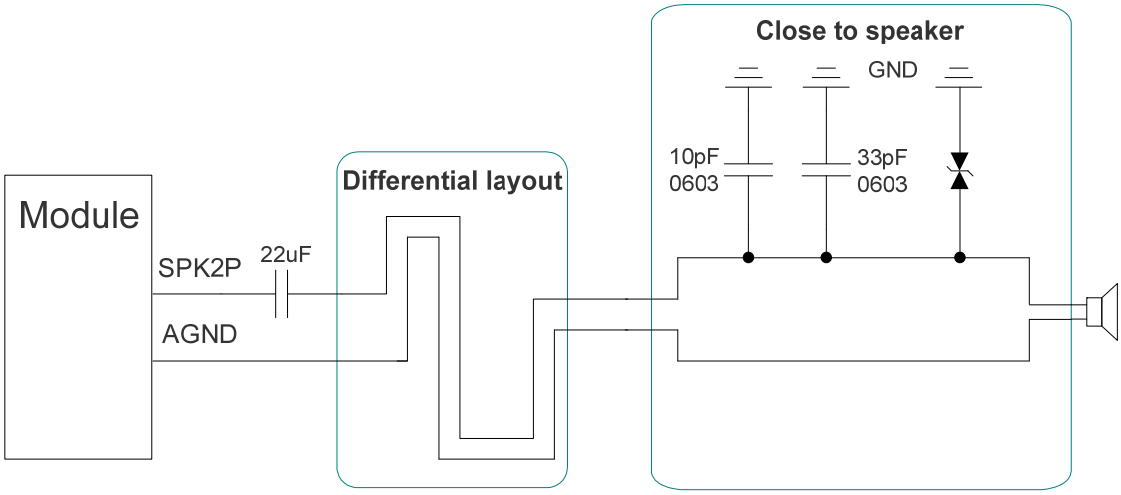

Figure 24: Reference Design for AOUT2

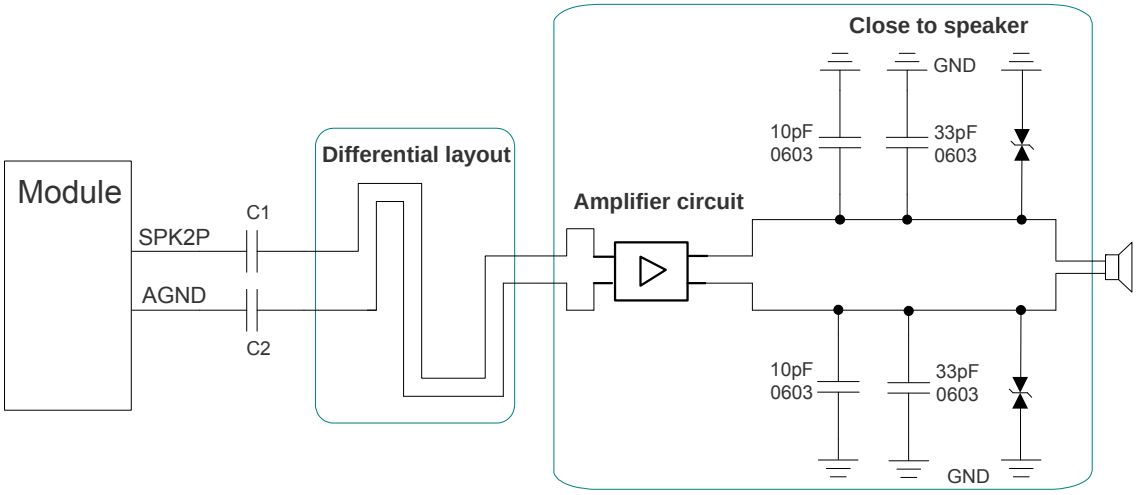

Figure 25: Reference Design with an Amplifier for AOUT2

NOTE

The value of C1 and C2 depends on the input impedance of audio amplifier.

3.11.4. Earphone Interface Application

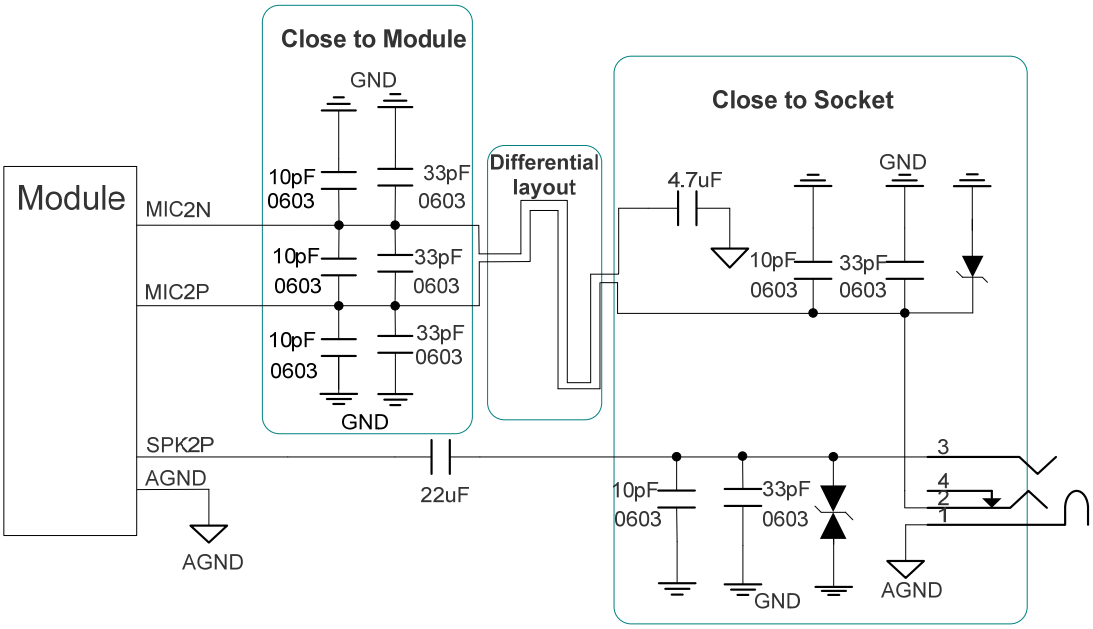

Figure 26: Reference Design for an Earphone

Table 14: Microphone Characteristics

Parameter	Min.	Typ.	Max.	Unit
Working Voltage	1.65	1.8	1.95	V
Working Current	20		1000	uA

Table 15: Speaker Characteristics

Parameter			Min.	Typ.	Max.	Unit
Normal Output (AOUT1)	Differential	Supply voltage	2.0	2.1	2.2	V
		Load resistance	25.6	32		ohm
Auxiliary Output (AOUT2)	Single ended	Supply voltage	2.0	2.1	2.2	V
		Load resistance	12	16		ohm
Output Power of AOUT1 and AOUT2				50		mW

3.12. PCM and I2C Interface

UC15 provides one Pulse Code Modulation (PCM) digital interface for audio design with 16-bit linear data formats, which supports the following modes:

- Primary mode (short sync, works as both master and slave)
- Auxiliary mode (long sync, works as master only)

UC15 supports an 8 kHz short sync mode at 2048 kHz, the data is sampled on the falling edge of the PCM_CLK and transmitted on the rising edge, and the PCM_SYNC falling edge represents the MSB.

UC15 also supports an 8 kHz long sync mode at 128 kHz, the data is sampled on the falling edge of the PCM_CLK and transmitted on the rising edge, and the PCM_SYNC rising edge represents the MSB.

The following figures show the different timing relationships of these modes.

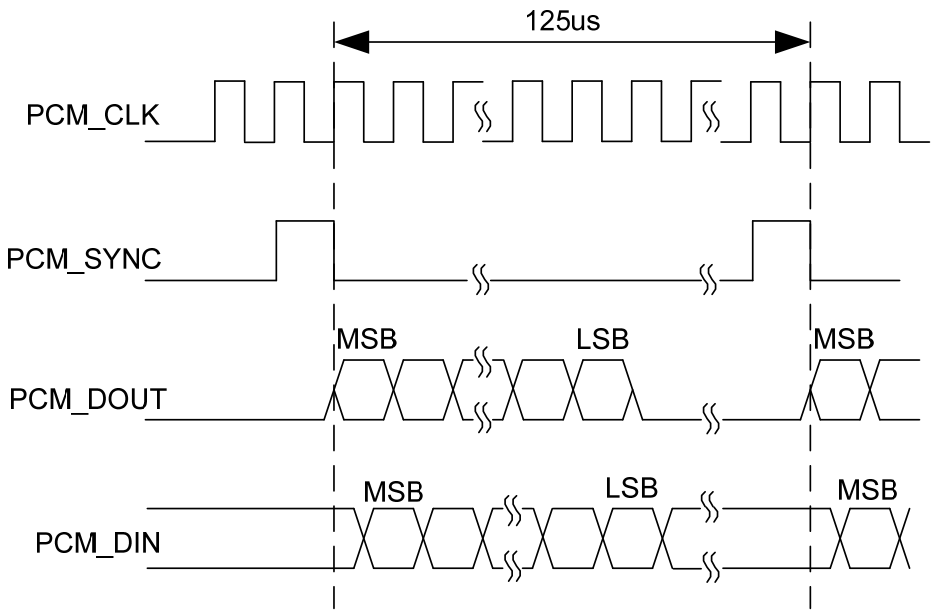

Figure 27: Primary Mode Timing

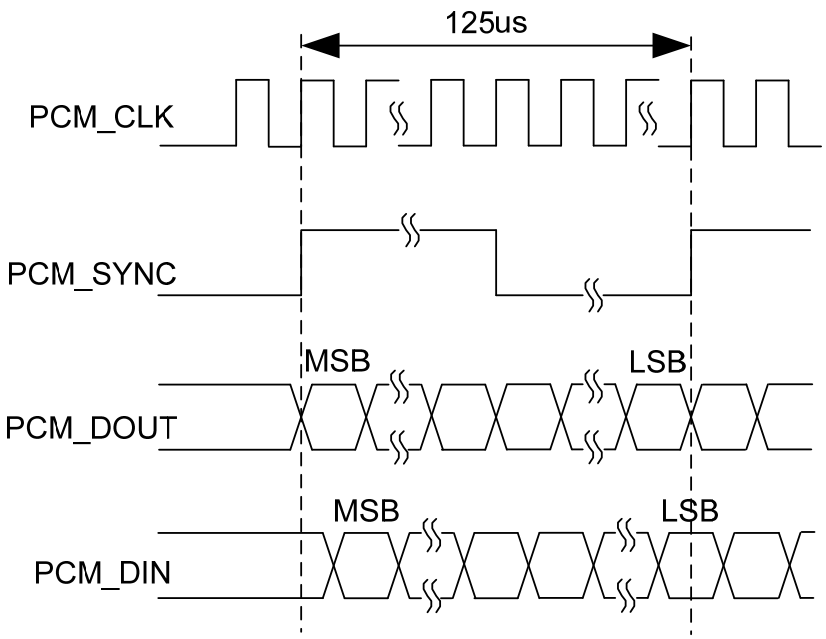

Figure 28: Auxiliary Mode Timing

The following table shows the pin definition of PCM and I2C interface which can be applied on audio codec design.

Table 16: Pin Definition of PCM and I2C Interface

Pin Name	Pin No.	I/O	Description	Comment
PCM_DOUT	34	DO	PCM data output.	2.6V power domain
PCM_DIN	35	DI	PCM data input.	2.6V power domain
PCM_CLK	36	IO	PCM data bit clock.	2.6V power domain
PCM_SYNC	37	IO	PCM data frame sync signal	2.6V power domain
I2C_SDA	38	IO	I2C serial data.	External pull-up resistor is required. 2.6V only.
I2C_SCL	39	DO	I2C serial clock.	External pull-up resistor is required. 2.6V only.

UC15's firmware has integrated the configuration on NAU8814 application with I2C interface. The default configuration is master mode which uses short sync data format with 2048 kHz clock. Please refer to ***document [1]*** for details about the command **AT+QDAI**.

The following figure shows the reference design of PCM interface with external codec IC.

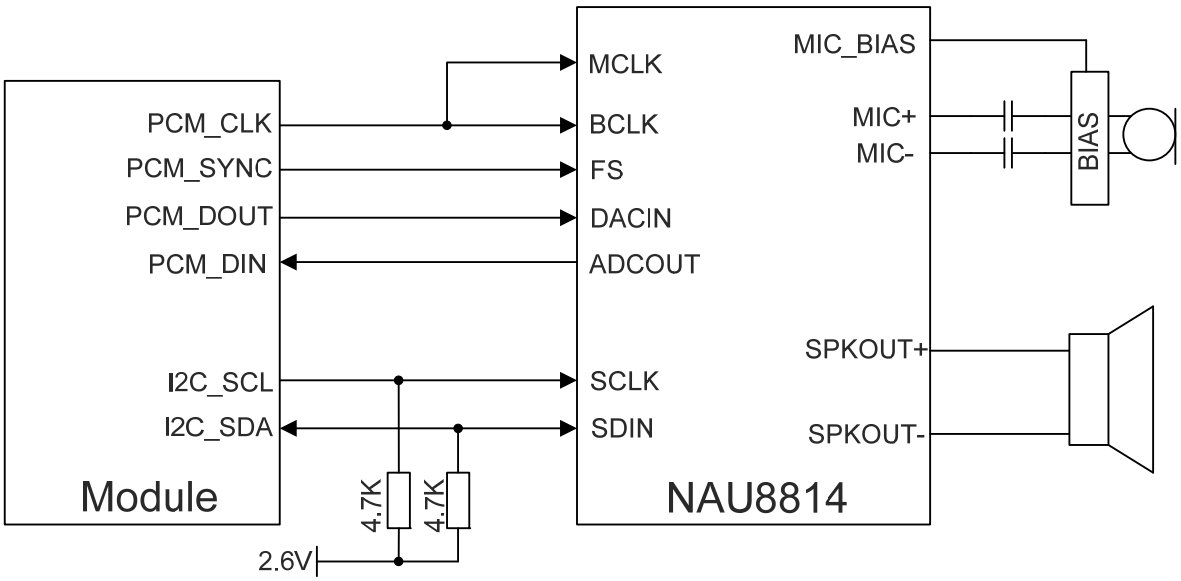

Figure 29: Reference Circuit of PCM Application with Audio Codec

NOTES

1. It is recommended to reserve RC (R=22Ω, C=22pF) circuit on the PCM lines, especially for PCM_CLK.
2. I2C bus is the standard interface, which is used with NAU8814 application by default.
3. The PCM feature is under development.

3.13. USIM Card Interface

3.13.1. USIM Card Application

The USIM card interface circuitry meets ETSI and IMT-2000 USIM interface requirements. Both 1.8V and 3.0V USIM cards are supported.

Table 17: Pin Definition of the USIM Interfaces

Pin Name	Pin No.	I/O	Description	Comment
USIM_VDD	12	PO	Power supply for USIM card.	Either 1.8V or 3.0V is supported by the module automatically.
USIM_DATA	13	IO	Data signal of USIM card.	

USIM_CLK	14	DO	Clock signal of USIM card.	
USIM_RST	15	DO	Reset signal of USIM card.	
USIM_ PRESENCE	11	DI	USIM card detection input.	2.6V power domain
USIM_GND	8		Specified ground for USIM card.	

The following figure shows the reference design of the 8-pin USIM card.

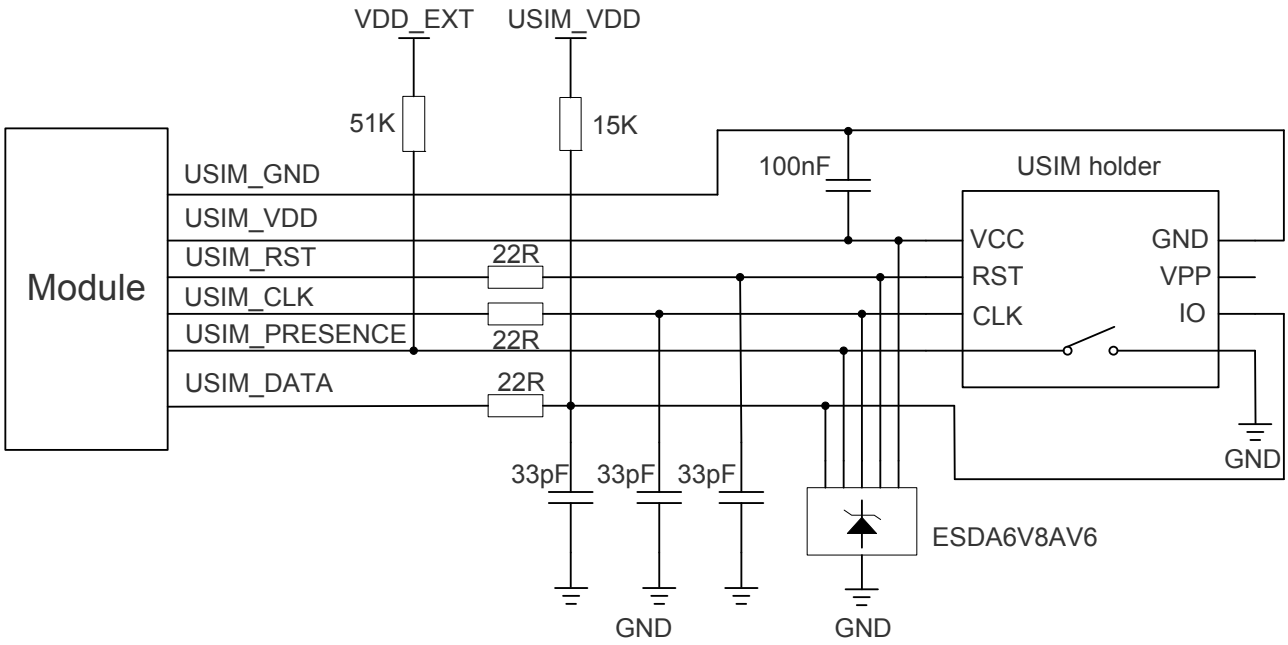

Figure 30: Reference Circuit of the 8-Pin USIM Card

NOTE

Some AT commands are invalid when USIM card is not applied.

UC15 supports USIM card hot-plugging via the USIM_PRESENCE pin. For details, refer to ***document [1]*** about the command **AT+QSIMDET**. If you do not need the USIM card detection function, keep USIM_PRESENCE unconnected. The reference circuit for using a 6-pin USIM card holder is illustrated as the following figure.

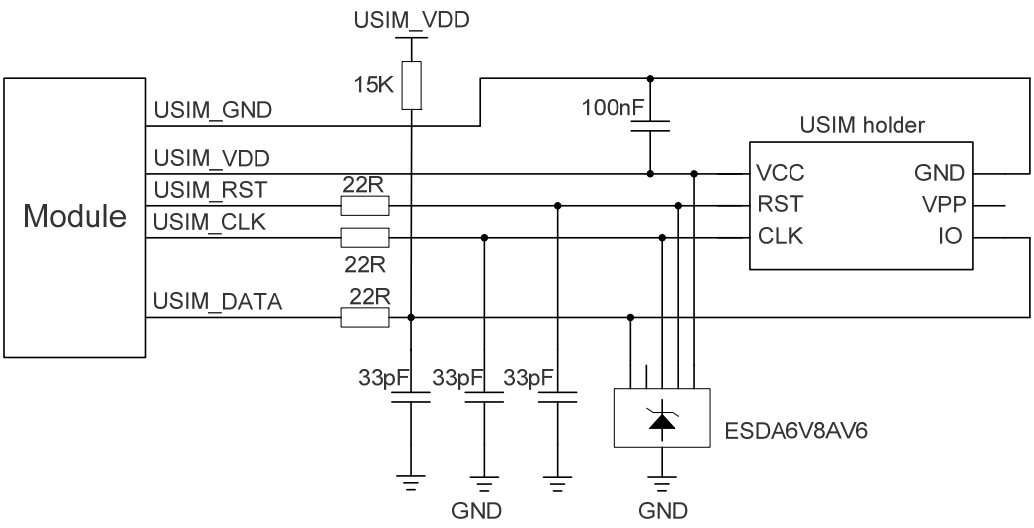

Figure 31: Reference Circuit of the 6-Pin USIM Card

In order to enhance the reliability and availability of the USIM card in customer's application, please follow the following criterion in the USIM circuit design:

- Keep layout of USIM card as close as possible to the module. Assure the possibility of the length of the trace is less than 200mm.
- Keep USIM card signal away from RF and VBAT alignment.
- Assure the ground between module and USIM cassette short and wide. Keep the width of ground and USIM_VDD no less than 0.5mm to maintain the same electric potential. The decouple capacitor of USIM_VDD should be less than 1uF and must be near to USIM cassette.
- To avoid cross-talk between USIM_DATA and USIM_CLK, keep them away with each other and shield them with surrounded ground.
- In order to offer good ESD protection, it is recommended to add TVS such as WILL (http://www.willsemi.com) ESDA6V8AV6. The capacitance of ESD component is less than 50pF. The 22Ω resistors should be added in series between the module and the USIM card so as to suppress the EMI spurious transmission and enhance the ESD protection. The 33pF capacitors are used for filtering interference of EGSM900. Please note that the USIM peripheral circuit should be close to the USIM card holder.
- The pull-up resistor on USIM_DATA line can improve anti-jamming capability when long layout trace and sensitive occasion is applied.

3.13.2. Design Considerations for USIM Card Holder

For 8-pin USIM card holder, it is recommended to use Molex 91228. Please visit http://www.molex.com for more information.

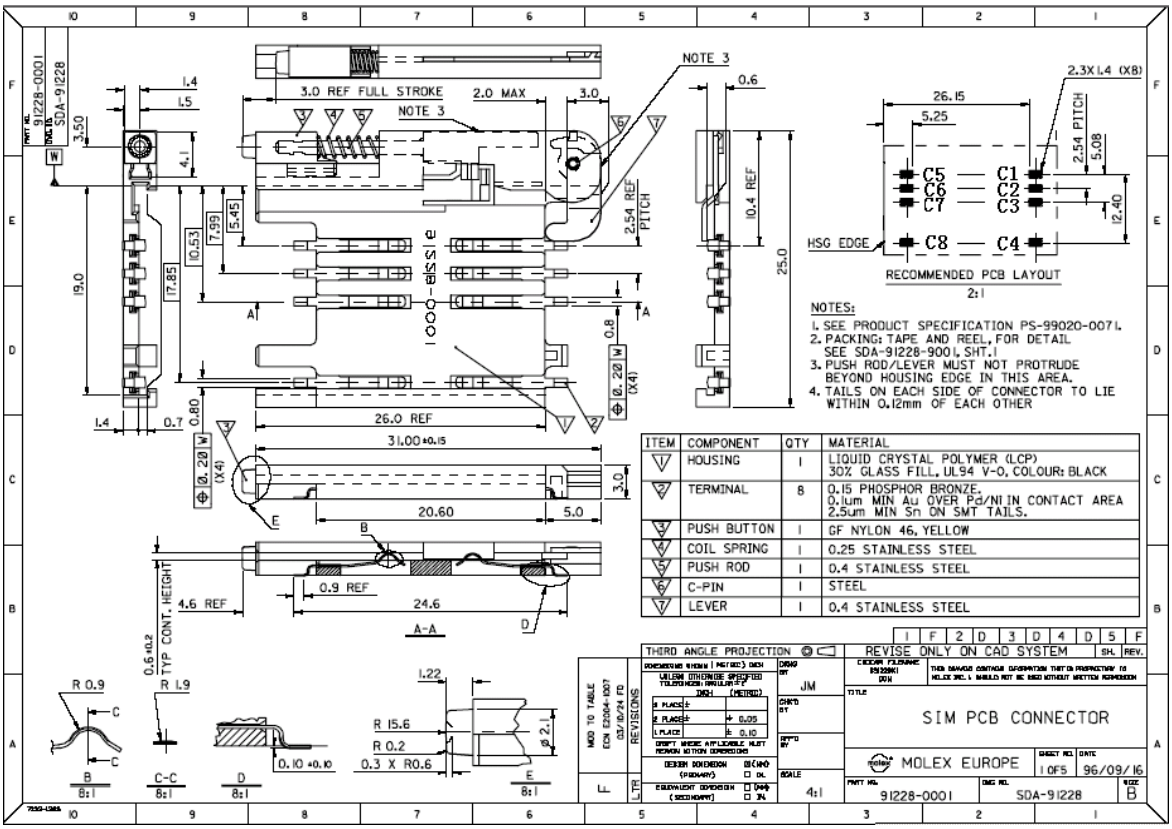

Figure 32: Molex 91228 USIM Card Holder

Table 18: Pin Description of Molex USIM Card Holder

Name	Pin	Function
VDD	C1	USIM card power supply
RST	C2	USIM card reset
CLK	C3	USIM card clock
/	C4	Not defined
GND	C5	Ground
VPP	C6	Not connected
DATA I/O	C7	USIM card data
/	C8	Pull-down GND with external circuit. When the tray is present, C4 is connected to C8.

For 6-pin USIM card holder, it is recommended to use Amphenol C707 10M006 512 2. Please visit http://www.amphenol.com for more information.

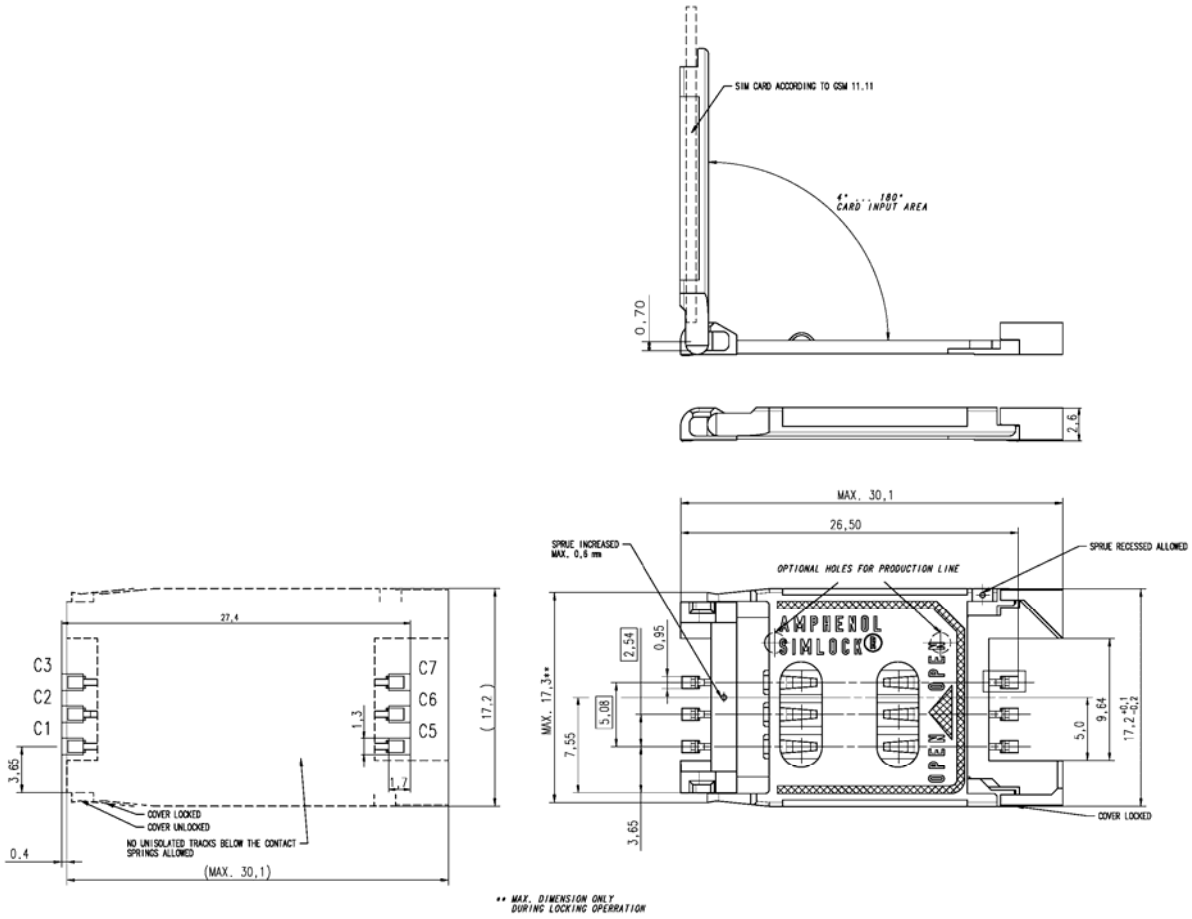

Figure 33: Amphenol C707 10M006 512 2 USIM Card Holder

Table 19: Pin Description of Amphenol USIM Card Holder

Name	Pin	Function
VDD	C1	USIM card power supply
RST	C2	USIM card reset
CLK	C3	USIM card clock
GND	C5	Ground
VPP	C6	Not connected
DATA I/O	C7	USIM card data

3.14. USB Interface

UC15 contains one integrated Universal Serial Bus (USB) transceiver which complies with the USB 2.0 specification and supports high speed (480Mbps), full speed (12Mbps) and low speed (1.5Mbps) mode. The USB interface is primarily used for AT command, data transmission, software debug and firmware upgrade. The following table shows the pin definition of USB interface.

Table 20: USB Pin Description

Pin Name	Pin No.	I/O	Description	Comment
USB_DP	62	IO	USB differential data bus (positive).	Require differential impedance of 90Ω.
USB_DM	63	IO	USB differential data bus (negative).	Require differential impedance of 90Ω.
USB_VBUS	64	PI	USB detection.	3.0~5.25V. Typical 5.0V.

More details about the USB 2.0 specifications, please visit http://www.usb.org/home.

The following figure shows the reference circuit of USB interface.

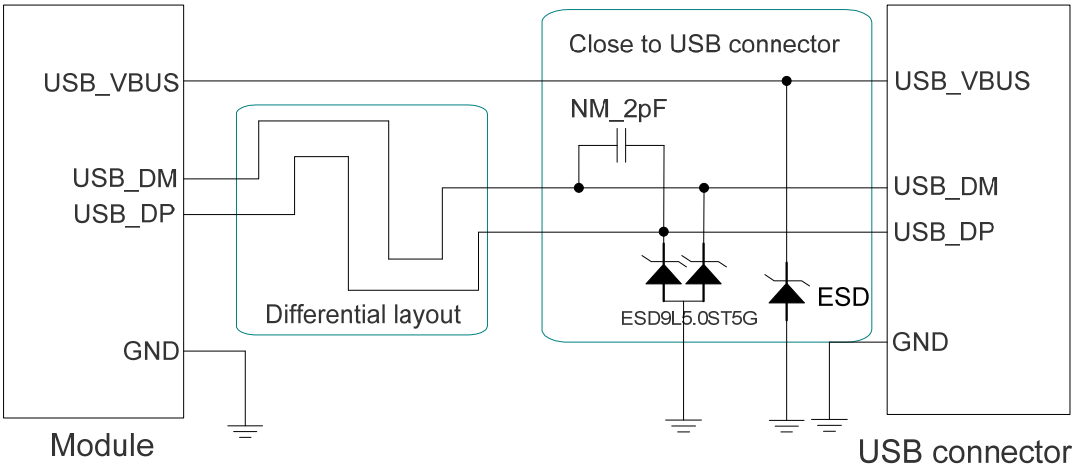

Figure 34: Reference Circuit of USB Application

In order to ensure the USB interface design corresponding with the USB 2.0 specification, please comply with the following principles.

- It is important to route the USB signal traces as differential pairs with total grounding. The impedance of USB differential trace is 90ohm.

- Keep the ESD components as closer to the USB connector as possible.
- Pay attention to the influence of junction capacitance of ESD component on USB data lines. Typically, the capacitance value should be less than 2pF such as ESD9L5.0ST5G.
- Do not route signal traces under crystals, oscillators, magnetic devices and RF signal traces. It is important to route the USB differential traces in inner-layer with ground shielding not only upper and lower layer but also right and left side.

NOTE

UC15 module can only be used as a slave device.

The USB interface is recommended to be reserved for firmware upgrade in your design. The following figure shows the recommended test points.

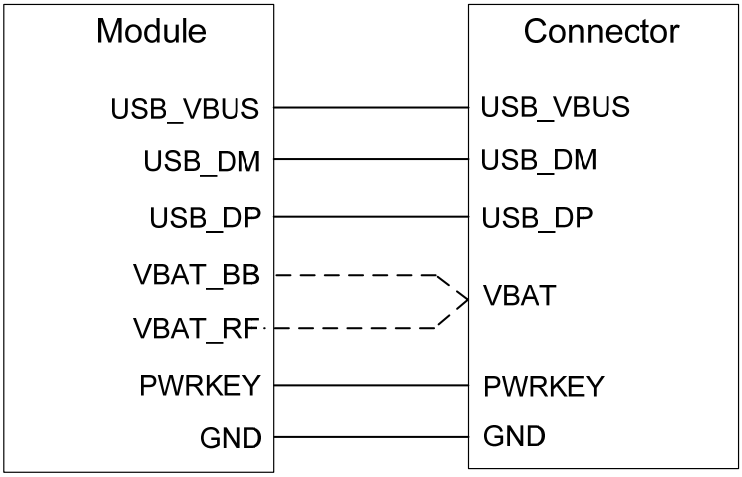

Figure 35: Test Points of Firmware Upgrade

3.15. ADC Function

The module provides two analog-to-digital converters (ADC) to digitize the analog signal to 12-bit digital data. Using AT command **AT+QADC=0** can read the voltage value on ADC0 pin. Using AT command **AT+QADC=1** can read the voltage value on ADC1 pin. For more details of these AT commands, please refer to ***document [1]***.

In order to improve the accuracy of ADC, the trace of ADC should be surrounded by ground.

Table 21: Pin Definition of the ADC

Pin Name	Pin NO.	Description
ADC0	41	General purpose analog to digital converter.
ADC1	40	General purpose analog to digital converter.

The following table describes the characteristics of the ADC function.

Table 22: Characteristics of the ADC

Parameter	Min.	Typ.	Max.	Unit
ADC0 Voltage Range	0		2.1	V
ADC1 Voltage Range	0		2.1	V
Sample Rate		2.4		MHz
ADC Resolution		12		bits

3.16. Network Status Indication

The module provides a pin named NETLIGHT to indicate the module network status which can be used to drive a LED. The following tables describe pin definition and logic level changes in different network status.

Table 23: Pin Definition of Network Indicator

Pin Name	Pin No.	I/O	Description	Comment
NETLIGHT	6	DO	Indicate the module network activity status.	2.6V power domain.

Table 24: Working State of the Network Indicator

Pin Name	Status	Description
NETLIGHT	200ms High/1800ms Low.	Network searching.
	1800ms High/200ms Low.	Idle.

	125ms High/125ms Low.	Data transfer is ongoing.
	Always High.	Voice calling.
	Always Low.	Sleep.

A reference circuit is shown in the following figure.

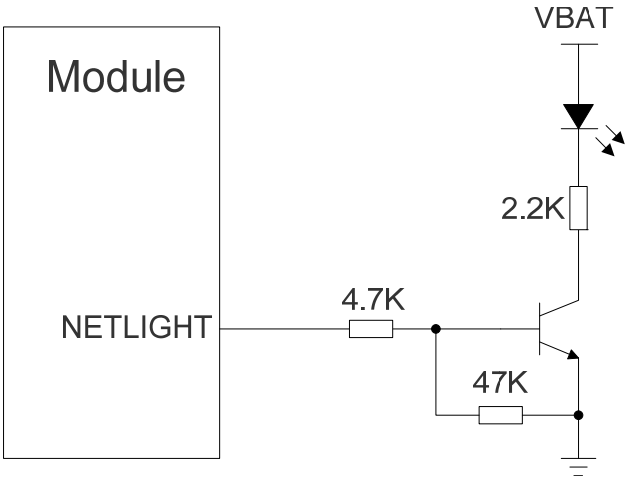

Figure 36: Reference Circuit of the Network Indicator

3.17. Operating Status Indication

The STATUS is used to indicate the module operation status. When the module is turned on normally, the STATUS will output high level.

Table 25: Pin Definition of STATUS

Pin Name	Pin No.	I/O	Description	Comment
STATUS	54	DO	Indicate the module operation status.	2.6V power domain.

A reference circuit is shown in the following figure.

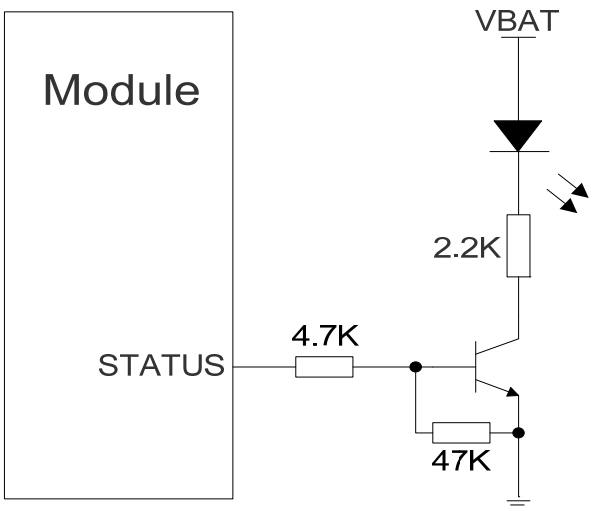

Figure 37: Reference Circuit of the STATUS

4 Antenna Interface

4.1. Antenna Interface

4.1.1. Pin Definition

Pin definition of RF antenna is shown as below.

Table 26: Pin Definition of the RF Antenna

Pin Name	Pin No.	I/O	Description	Comment
RF_ANT	43	IO	RF antenna pad	50Ω impedance

4.1.2. Operating Frequency

Table 27: Module Operating Frequencies

Band	Receive	Transmit	Unit
GSM850	869 ~ 894	824 ~ 849	MHz
PCS1900	1930 ~ 1990	1850 ~ 1910	MHz
UMTS1900	1930 ~ 1990	1850 ~ 1910	MHz
UMTS850	869 ~ 894	824 ~ 849	MHz

4.1.3. Reference Design

The RF interface has an impedance of 50Ω.The reference design of RF antenna is shown as below. It should reserve a π-type matching circuit for better RF performance. The capacitors are not mounted by default.

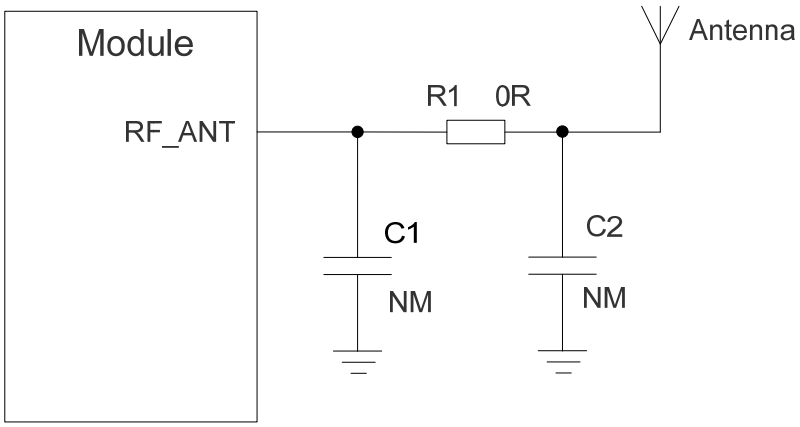

Figure 38: Reference Circuit of Antenna Interface

4.2. Antenna Installation

4.2.1. Antenna Requirement

The following table shows the requirements on GSM/UMTS antenna.

Table 28: Antenna Requirements

Type	Requirements
GSM850 UMTS850	Cable insertion loss < 0.5dB.
PCS1900 UMTS1900	Cable insertion loss < 0.9dB.

4.2.2. Install the Antenna with RF Connector

The following is the antenna installation with RF connector provided by HIROSE. The recommended RF connector is UF.L-R-SMT.

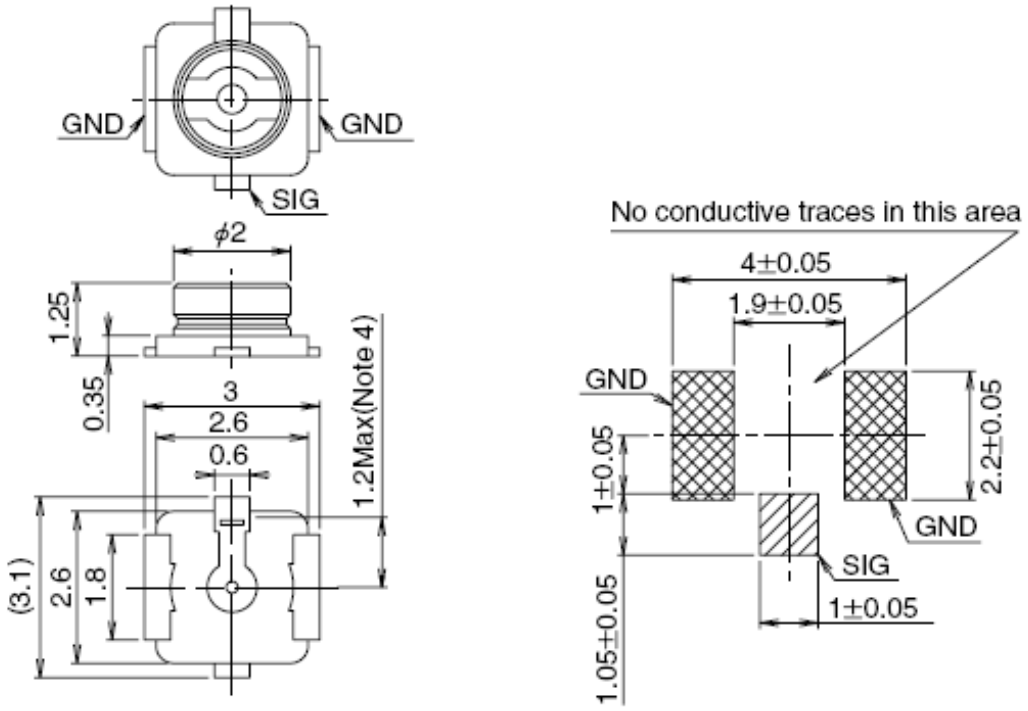

Figure 39: Dimensions of the UF.L-R-SMT Connector (Unit: mm)

You can use U.FL-LP serial connector listed in the following figure to match the UF.L-R-SMT.

	U.FL-LP-040	U.FL-LP-066	U.FL-LP(V)-040	U.FL-LP-062	U.FL-LP-088
Part No.	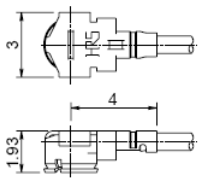	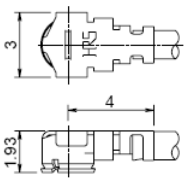	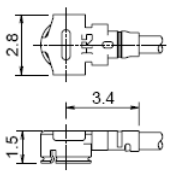	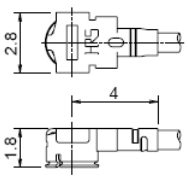	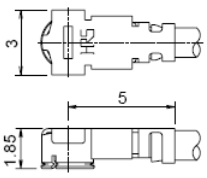
Mated Height	2.5mm Max. (2.4mm Nom.)	2.5mm Max. (2.4mm Nom.)	2.0mm Max. (1.9mm Nom.)	2.4mm Max. (2.3mm Nom.)	2.4mm Max. (2.3mm Nom.)
Applicable cable	Dia. 0.81mm Coaxial cable	Dia. 1.13mm and Dia. 1.32mm Coaxial cable	Dia. 0.81mm Coaxial cable	Dia. 1mm Coaxial cable	Dia. 1.37mm Coaxial cable
Weight (mg)	53.7	59.1	34.8	45.5	71.7
RoHS	YES				

Figure 40: Mechanicals of UF.L-LP Connectors (Unit: mm)

The following figure describes the space factor of mated connector:

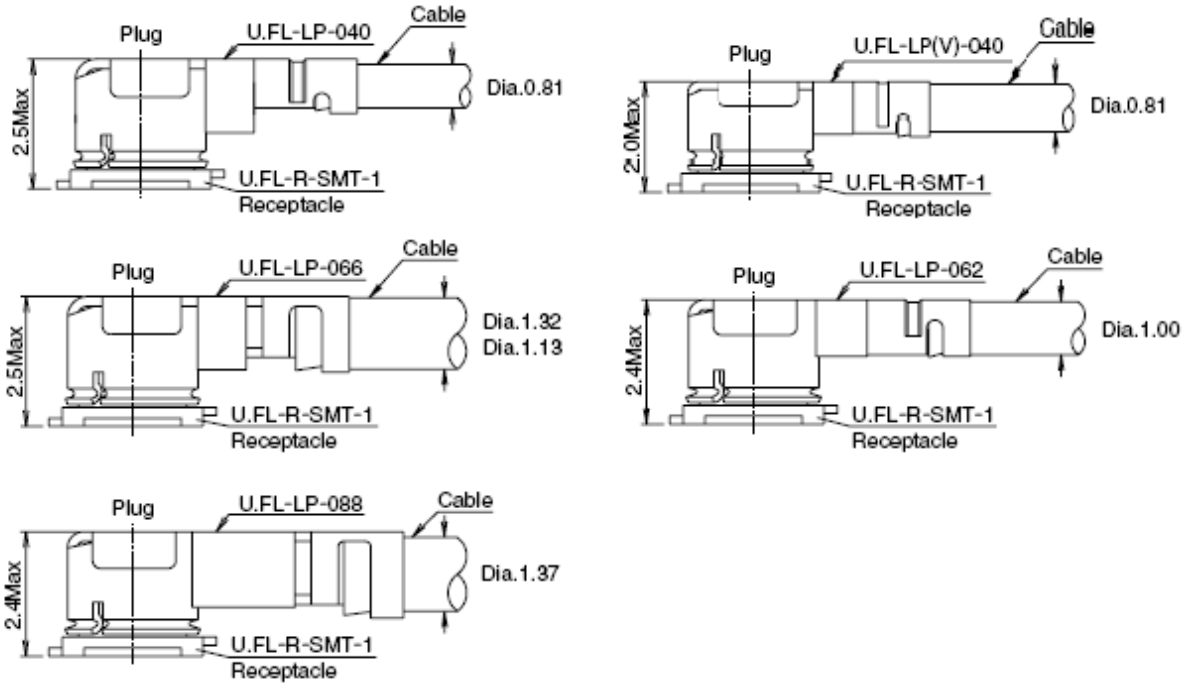

Figure 41: Space Factor of Mated Connector (Unit: mm)

For more details, please visit http://www.hirose.com.

5 Electrical, Reliability and Radio Characteristics

5.1. Absolute Maximum Ratings

Absolute maximum ratings for power supply and voltage on digital and analog pins of module are listed in the following table:

Table 29: Absolute Maximum Ratings

Parameter	Min.	Max.	Unit
VBAT_RF/VBAT_BB	-0.5	4.7	V
USB_VBUS	-0.5	6.0	V
Peak Current of VBAT_BB	0	0.8	A
Peak Current of VBAT_RF	0	1.8	A
Voltage at Digital Pins (1.8V digital I/O)	-0.3	2.1	V
Voltage at Digital Pins (2.6V digital I/O)	-0.3	2.9	V
Voltage at ADC0	0	2.2	V
Voltage at ADC1	0	2.2	V

5.2. Power Supply Ratings

Table 30: The Module Power Supply Ratings

Parameter	Description	Conditions	Min.	Typ.	Max.	Unit
VBAT	VBAT_BB and VBAT_RF	Voltage must stay within the min/max values, including voltage drop, ripple, and spikes.	3.3	3.8	4.3	V
	Voltage drop during transmitting burst	Maximum power control level on GSM850			400	mV
I_{VBAT}	Peak supply current (during transmission slot)	Maximum power control level on GSM850		1.8	2.0	A
USB_VBUS	USB detection		3.0	5.0	5.25	V

5.3. Operating Temperature

The operating temperature is listed in the following table.

Table 31: Operating Temperature

Parameter	Min.	Typ.	Max.	Unit
Normal Temperature	-35	+25	+75	ºC
Restricted Operation[1)]	-40 ~ -35		+75 ~ +85	ºC
Storage Temperature	-45		+90	ºC

NOTE

"[1)]" When the module works within the temperature range, the deviations from the RF specification may occur. For example, the frequency error or the phase error would increase.

5.4. Current Consumption

The values of current consumption are shown below.

Table 32: Module Current Consumption

Parameter	Description	Conditions	Typ.	Unit
I_{VBAT}	GSM/GPRS supply current	Sleep (USB disconnected)	3.6 @DRX=2 2.5 @DRX=5 2.2 @DRX=9	mA
		Sleep (USB suspended)	3.8 @DRX=2 2.7 @DRX=5 2.4 @DRX=9	mA
		Idle (USB disconnected) @DRX=5	30	mA
		Idle (USB connected) @DRX=5	60	mA
	WCDMA supply current	Sleep (USB disconnected)	4.0 @DRX=6 3.0 @DRX=7 2.2 @DRX=8 2.1 @DRX=9	mA
		Sleep (USB suspended)	4.0 @DRX=6 3.0 @DRX=7 2.5 @DRX=8 2.2 @DRX=9	mA
		Idle (USB disconnected) @DRX=6	30	mA
		Idle (USB connected) @DRX=6	60	mA
	GPRS data transfer	GSM850 1DL/1UL @PCL=5	222	mA
		GSM850 4DL/1UL @PCL=5	222	mA
		GSM850 3DL/2UL @PCL=5	320	mA
		GSM850 2DL/3UL @PCL=5	403	mA
		GSM850 1DL/4UL @PCL=5	459	mA
		PCS1900 1DL/1UL @PCL=0	170	mA
		PCS1900 4DL/1UL @PCL=0	170	mA
		PCS1900 3DL/2UL @PCL=0	238	mA

		PCS1900 2DL/3UL @PCL=0	295	mA
		PCS1900 1DL/4UL @PCL=0	331	mA
	WCDMA data transfer	UMTS1900 HSDPA @max power	441	mA
		UMTS850 HSDPA @max power	372	mA
	GSM voice call	GSM850 @PCL=5	239	mA
		PCS1900 @PCL=0	183	mA
	WCDMA voice call	UMTS1900 @max power	520	mA
		UMTS850 @max power	450	mA

5.5. RF Output Power

Table 33: Module Conducted RF Output Power

Frequency	Max.	Min.
GSM850	33dBm±2dB	5dBm±5dB
PCS1900	30dBm±2dB	0dBm±5dB
GSM850 (8-PSK)	27dBm±3dB	5dBm±5dB
PCS1900 (8-PSK)	26dBm+3/-4dB	0dBm±5dB
UMTS850	24dBm+1/-3dB	-56dBm±5dB
UMTS1900	24dBm+1/-3dB	-56dBm±5dB

NOTE

In GPRS 4 slots TX mode, the max output power is reduced by 2.5dB. This design conforms to the GSM specification as described in Chapter 13.16 of 3GPP TS 51.010-1.

5.6. RF Receiving Sensitivity

Table 34: Module Conducted Receiving Sensitivity

Frequency	Receive Sensitivity (Typ.)	Unit
GSM850	-108.5	dBm
PCS1900	-108.5	dBm
UMTS850	-110	dBm
UMTS1900	-110	dBm

5.7. Electrostatic Discharge

The module is not protected against electrostatics discharge (ESD) in general. Consequently, it is subject to ESD handling precautions that typically apply to ESD sensitive components. Proper ESD handling and packaging procedures must be applied throughout the processing, handling and operation of any application that incorporates the module.

The following table shows the module electrostatics discharge characteristics.

Table 35: Electrostatics Discharge Characteristics

Tested Points	Contact Discharge	Air Discharge	Unit
VBAT, GND	±5	±10	kV
Antenna Interface	±4	±8	kV
Other Interfaces	±0.5	±1	kV

6 Mechanical Dimensions

This chapter describes the mechanical dimensions of the module. All dimensions are measured in mm.

6.1. Mechanical Dimensions of the Module

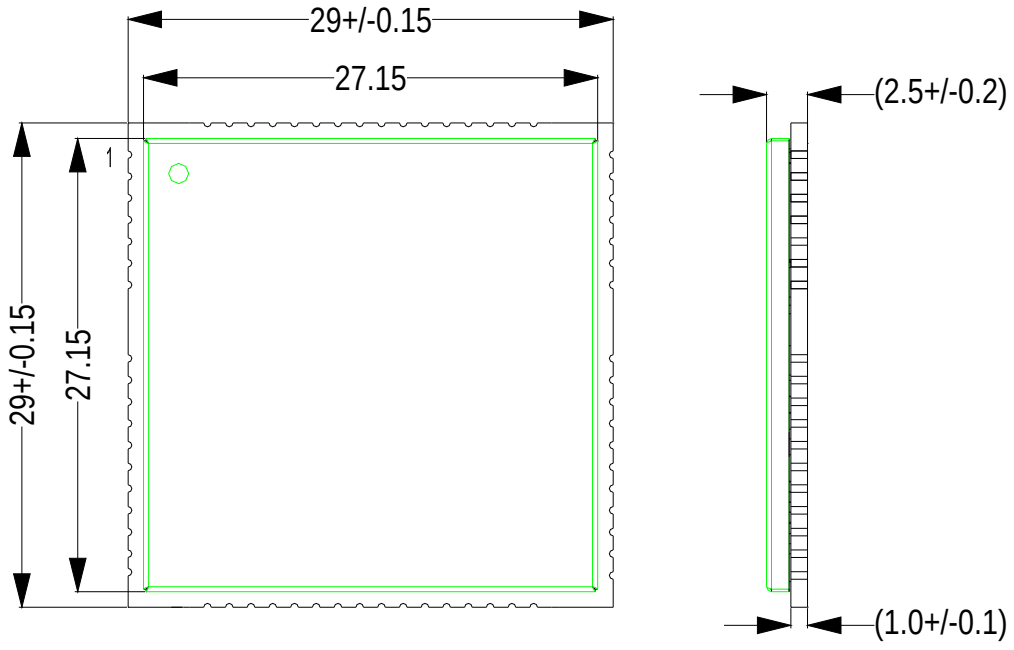

Figure 42: UC15 Top and Side Dimensions

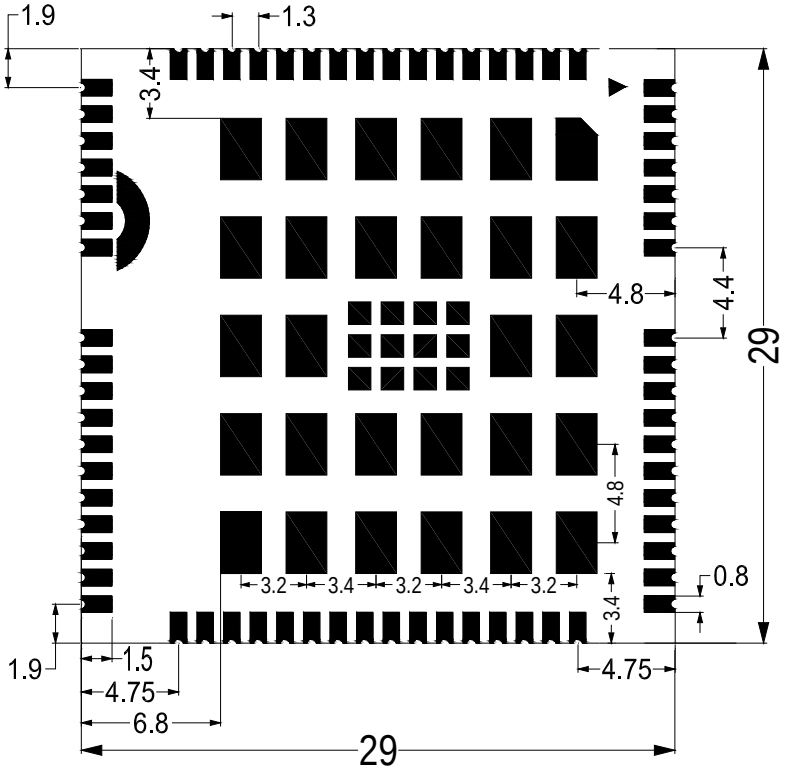

Figure 43: UC15 Bottom Dimensions (Bottom View)

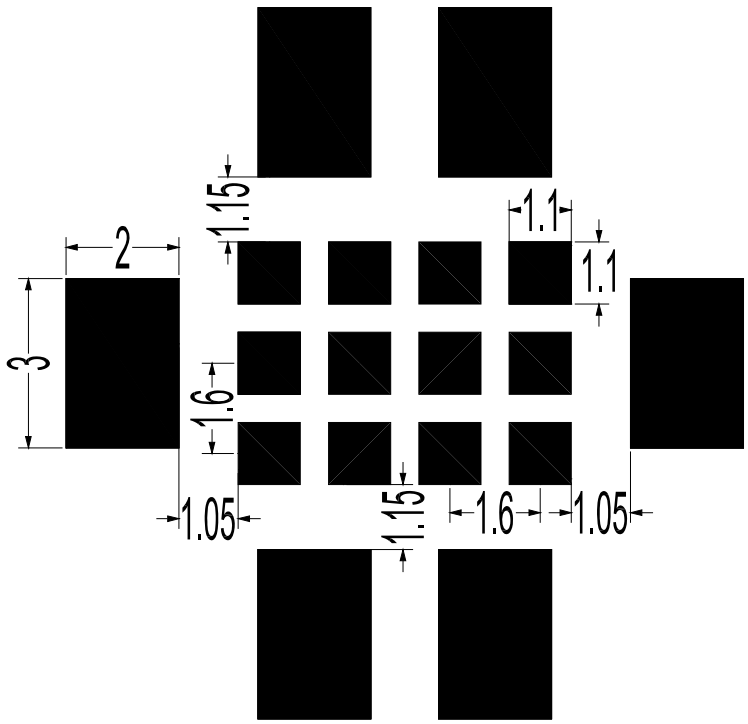

Figure 44: Bottom Pads Dimensions (Bottom View)

6.2. Footprint of Recommendation

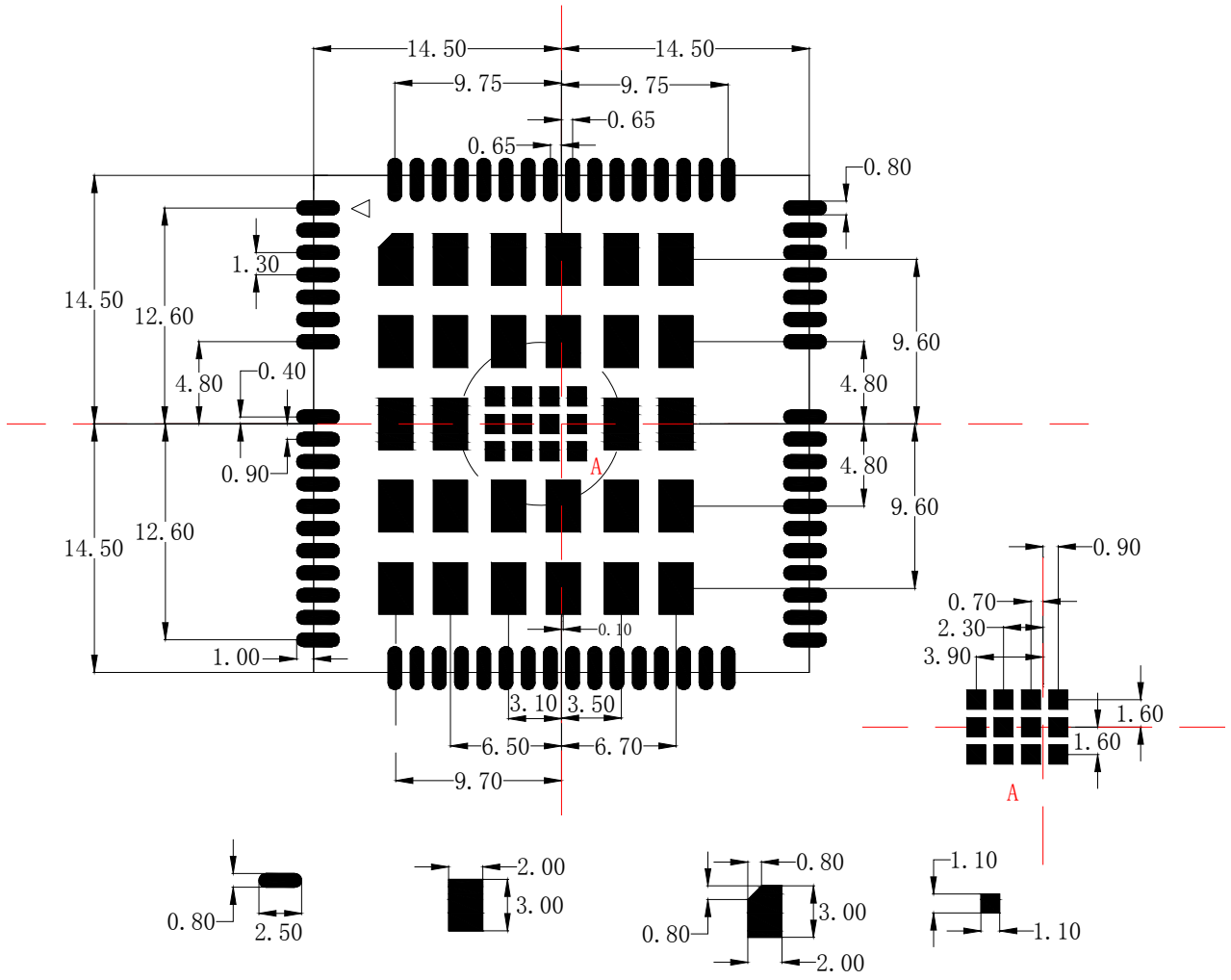

Figure 45: Recommended Footprint (Top View)

NOTES

1. Refer to figure 2 about the pin distribution (especially for pin 65, 66, 67, 68).
2. The pins on area A are reserved, please keep them unconnected.
3. In order to maintain the module, keep about 3mm between the module and other components in the host PCB.

6.3. Top View of the Module

Figure 46: Top View of the Module

6.4. Bottom View of the Module

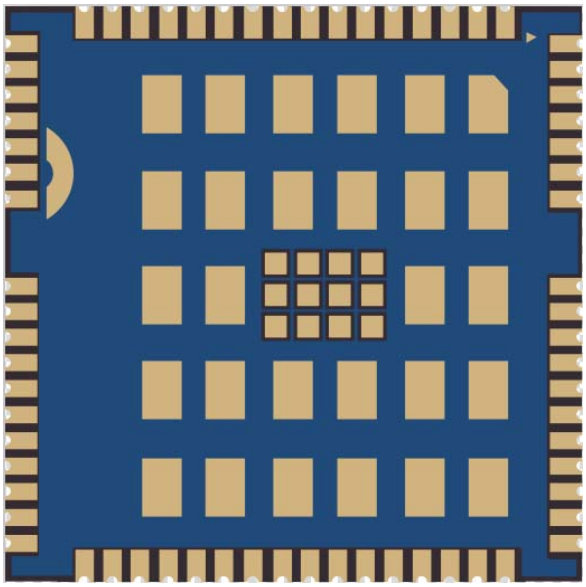

Figure 47: Bottom View of the Module

7 Storage and Manufacturing

7.1. Storage

UC15 is stored in the vacuum-sealed bag. The restriction of storage condition is shown as below.

Shelf life in sealed bag is 12 months at < 40ºC/90%RH.

After this bag is opened, devices that will be subjected to reflow solder or other high temperature process must be:

- Mounted within 72 hours at factory conditions of ≤ 30ºC/60%RH.
- Stored at < 10% RH.

Devices require bake, before mounting, if:

- Humidity indicator card is > 10% when read 23ºC±5ºC.
- Mounted for more than 72 hours at factory conditions of ≤ 30ºC/60% RH.

If baking is required, devices may be baked for 48 hours at 125ºC±5ºC.

NOTE

As plastic container cannot be subjected to high temperature, module needs to be taken out from container to high temperature (125ºC) bake. If shorter bake times are desired, please refer to IPC/JEDECJ-STD-033 for bake procedure.

7.2. Manufacturing and Welding

The squeegee should push the paste on the surface of the stencil that makes the paste fill the stencil openings and penetrate to the PCB. The force on the squeegee should be adjusted so as to produce a clean stencil surface on a single pass. To ensure the module soldering quality, the thickness of stencil at the hole of the module pads should be 0.18mm. For details, please refer to ***document [4]***.

It is suggested that peak reflow temperature is 235~245ºC (for SnAg3.0Cu0.5 alloy). Absolute max reflow temperature is 260ºC. To avoid damage to the module when it was repeatedly heated, it is suggested that the module should be mounted after the first panel has been reflowed. The following picture is the actual diagram which we have operated.

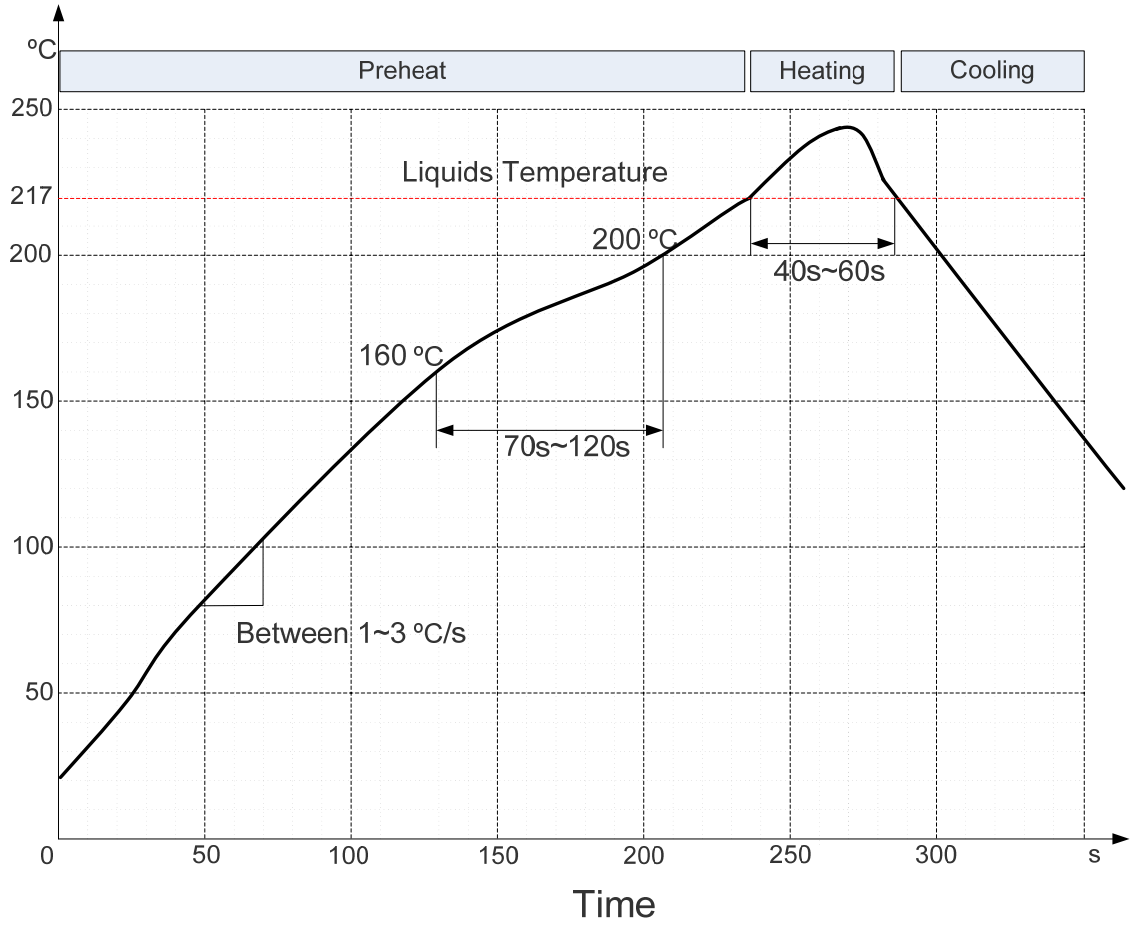

Figure 48: Reflow Soldering Profile

7.3. Packaging

UC15 is packaged in the tap and reel carriers. One reel is 12.4m length and contains 250pcs modules. The following figure shows the package details.

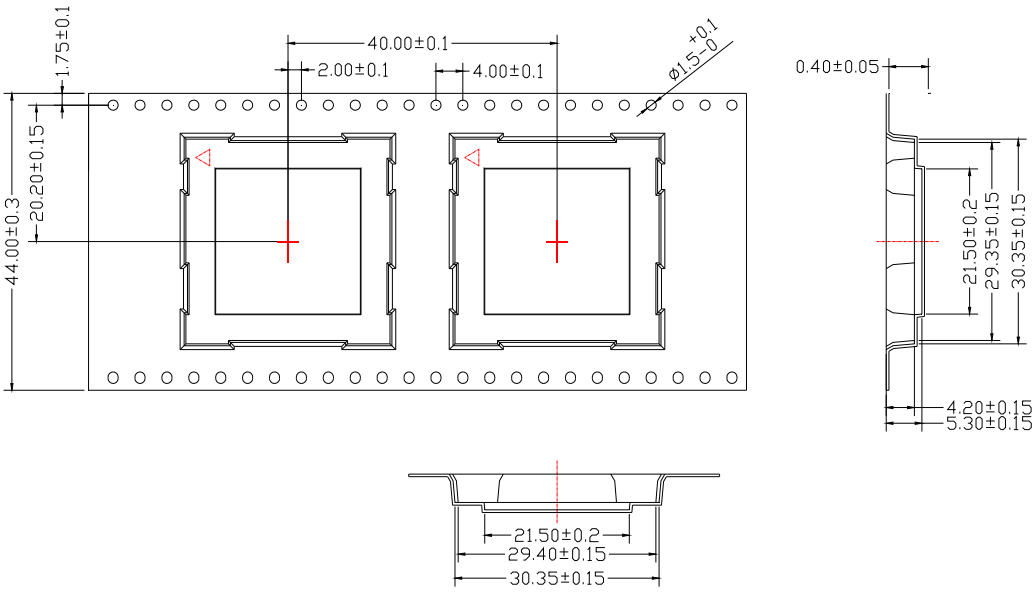

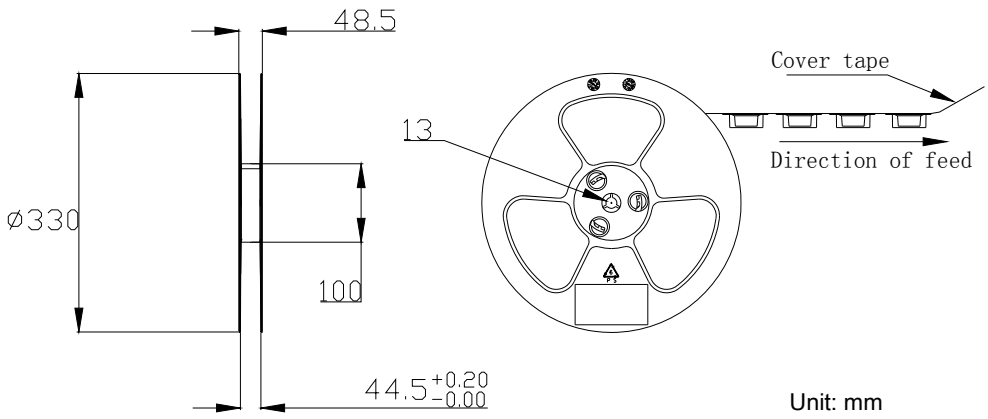

Figure 49: Carrier Tape

8 Appendix A Reference

Table 36: Related Documents

SN	Document Name	Remark
[1]	Quectel_UC15_AT_Commands_Manual	UC15 AT commands manual
[2]	Quectel_M10_EVB_User_Guide	M10 EVB user guide
[3]	Quectel_UC15_Reference_Design	UC15 reference design
[4]	Quectel_Module_Secondary_SMT_User_Guide	Module secondary SMT user guide

Table 37: Terms and Abbreviations

Abbreviation	Description
AMR	Adaptive Multi-rate
bps	Bits Per Second
CHAP	Challenge Handshake Authentication Protocol
CS	Coding Scheme
CSD	Circuit Switched Data
CTS	Clear to Send
DRX	Discontinuous Reception
DCE	Data Communications Equipment (typical module)
DTE	Data Terminal Equipment (typical computer, external controller)
DTR	Data Terminal Ready
DTX	Discontinuous Transmission

EFR	Enhanced Full Rate
EGSM	Extended GSM900 Band (including standard GSM900 band)
ESD	Electrostatic Discharge
FR	Full Rate
GMSK	Gaussian Minimum Shift Keying
GSM	Global System for Mobile Communications
HR	Half Rate
HSDPA	High Speed Down Link Packet Access
IMEI	International Mobile Equipment Identity
Imax	Maximum Load Current
LED	Light Emitting Diode
LSB	Least Significant Bit
ME	Mobile Equipment
MO	Mobile Originated
MS	Mobile Station (GSM Engine)
MT	Mobile Terminated
PAP	Password Authentication Protocol
PBCCH	Packet Broadcast Control Channel
PCB	Printed Circuit Board
PDU	Protocol Data Unit
PPP	Point-to-Point Protocol
PSK	Phase Shift Keying
QAM	Quadrature Amplitude Modulation
QPSK	Quadrature Phase Shift Keying
RF	Radio Frequency

RMS	Root Mean Square (value)
Rx	Receive
SIM	Subscriber Identification Module
SMS	Short Message Service
TX	Transmitting Direction
UART	Universal Asynchronous Receiver & Transmitter
UMTS	Universal Mobile Telecommunications System
URC	Unsolicited Result Code
USIM	Universal Subscriber Identity Module
USSD	Unstructured Supplementary Service Data
Vmax	Maximum Voltage Value
Vnorm	Normal Voltage Value
Vmin	Minimum Voltage Value
V_{IH}max	Maximum Input High Level Voltage Value
V_{IH}min	Minimum Input High Level Voltage Value
V_{IL}max	Maximum Input Low Level Voltage Value
V_{IL}min	Minimum Input Low Level Voltage Value
$V_I$max	Absolute Maximum Input Voltage Value
$V_I$min	Absolute Minimum Input Voltage Value
V_{OH}max	Maximum Output High Level Voltage Value
V_{OH}min	Minimum Output High Level Voltage Value
V_{OL}max	Maximum Output Low Level Voltage Value
V_{OL}min	Minimum Output Low Level Voltage Value
WCDMA	Wideband Code Division Multiple Access

9 Appendix B GPRS Coding Scheme

Table 38: Description of Different Coding Schemes

Scheme	CS-1	CS-2	CS-3	CS-4
Code Rate	1/2	2/3	3/4	1
USF	3	3	3	3
Pre-coded USF	3	6	6	12
Radio Block excl.USF and BCS	181	268	312	428
BCS	40	16	16	16
Tail	4	4	4	-
Coded Bits	456	588	676	456
Punctured Bits	0	132	220	-
Data Rate Kb/s	9.05	13.4	15.6	21.4

10 Appendix C GPRS Multi-slot Class

Twenty-nine classes of GPRS multi-slot modes are defined for MS in GPRS specification. Multi-slot classes are product dependant, and determine the maximum achievable data rates in both the uplink and downlink directions. Written as 3+1 or 2+2, the first number indicates the amount of downlink timeslots, while the second number indicates the amount of uplink timeslots. The active slots determine the total number of slots the GPRS device can use simultaneously for both uplink and downlink communications. The description of different multi-slot classes is shown in the following table.

Table 39: Description of Different Coding Schemes

Multislot Class	Downlink Slots	Uplink Slots	Active Slots
1	1	1	2
2	2	1	3
3	2	2	3
4	3	1	4
5	2	2	4
6	3	2	4
7	3	3	4
8	4	1	5
9	3	2	5
10	4	2	5
11	4	3	5
12	4	4	5

11 Appendix D EDGE Modulation and Coding Scheme

Table 40: EDGE Modulation and Coding Scheme

Coding Scheme	Modulation	Coding Family	1 Timeslot	2 Timeslot	4 Timeslot
CS-1:	GMSK	/	9.05kbps	18.1kbps	36.2kbps
CS-2:	GMSK	/	13.4kbps	26.8kbps	53.6kbps
CS-3:	GMSK	/	15.6kbps	31.2kbps	62.4kbps
CS-4:	GMSK	/	21.4kbps	42.8kbps	85.6kbps
MCS-1	GMSK	C	8.80kbps	17.60kbps	35.20kbps
MCS-2	GMSK	B	11.2kbps	22.4kbps	44.8kbps
MCS-3	GMSK	A	14.8kbps	29.6kbps	59.2kbps
MCS-4	GMSK	C	17.6kbps	35.2kbps	70.4kbps
MCS-5	8-PSK	B	22.4kbps	44.8kbps	89.6kbps
MCS-6	8-PSK	A	29.6kbps	59.2kbps	118.4kbps
MCS-7	8-PSK	B	44.8kbps	89.6kbps	179.2kbps
MCS-8	8-PSK	A	54.4kbps	108.8kbps	217.6kbps
MCS-9	8-PSK	A	59.2kbps	118.4kbps	236.8kbps