EC25-V

User Manual

LTE Module Series

Rev. EC25-V_User_Manual_V1.0

Date: 2016-03-28

www.quectel.com

Our aim is to provide customers with timely and comprehensive service. For any assistance, please contact our company headquarters:

Quectel Wireless Solutions Co., Ltd.
Office 501, Building 13, No.99, Tianzhou Road, Shanghai, China, 200233
Tel: +86 21 5108 6236
Mail: info@quectel.com

Or our local office, for more information, please visit:
http://www.quectel.com/support/salesupport.aspx

For technical support, to report documentation errors, please visit:
http://www.quectel.com/support/techsupport.aspx
Or Email: Support@quectel.com

GENERAL NOTES

QUECTEL OFFERS THIS INFORMATION AS A SERVICE TO ITS CUSTOMERS. THE INFORMATION PROVIDED IS BASED UPON CUSTOMERS' REQUIREMENTS. QUECTEL MAKES EVERY EFFORT TO ENSURE THE QUALITY OF THE INFORMATION IT MAKES AVAILABLE. QUECTEL DOES NOT MAKE ANY WARRANTY AS TO THE INFORMATION CONTAINED HEREIN, AND DOES NOT ACCEPT ANY LIABILITY FOR ANY INJURY, LOSS OR DAMAGE OF ANY KIND INCURRED BY USE OF OR RELIANCE UPON THE INFORMATION. THE INFORMATION SUPPLIED HEREIN IS SUBJECT TO CHANGE WITHOUT PRIOR NOTICE.

COPYRIGHT

THIS INFORMATION CONTAINED HERE IS PROPRIETARY TECHNICAL INFORMATION OF QUECTEL CO., LTD. TRANSMITTABLE, REPRODUCTION, DISSEMINATION AND EDITING OF THIS DOCUMENT AS WELL AS UTILIZATION OF THIS CONTENTS ARE FORBIDDEN WITHOUT PERMISSION. OFFENDERS WILL BE HELD LIABLE FOR PAYMENT OF DAMAGES. ALL RIGHTS ARE RESERVED IN THE EVENT OF A PATENT GRANT OR REGISTRATION OF A UTILITY MODEL OR DESIGN.

Copyright © Quectel Wireless Solutions Co., Ltd. 2016. All rights reserved.

About the Document

History

Revision	Date	Author	Description
V1.0	2016-03-28	Woody WU	Initial

Contents

About the Document **2**

Contents **3**

Table Index **5**

Figure Index **6**

1 Introduction **7**
1.1. Safety Information 7

2 Product Concept **9**
2.1. General Description 9
2.2. Directives and Standards 10
2.2.1. FCC Statement 10
2.3. Key Features 10
2.4. Functional Diagram 12
2.5. Evaluation Board 13

3 Application Interface **14**
3.1. General Description 14
3.2. Pin Assignment 14
3.3. Pin Description 16
3.4. Operating Modes 21
3.5. Power Saving 22
3.5.1. Sleep Mode 22
3.5.1.1. UART Application 22
3.5.1.2. USB Application with USB Remote Wakeup Function 23
3.5.1.3. USB Application with USB Suspend/Resume and RI Function 23
3.5.1.4. USB Application without USB Suspend Function 24
3.5.2. Airplane Mode 25
3.6. Power Supply 25
3.6.1. Power Supply Pins 25
3.6.2. Decrease Voltage Drop 26
3.6.3. Reference Design for Power Supply 27
3.6.4. Monitor the Power Supply 28
3.7. Turn on and off Scenarios 28
3.7.1. Turn on Module Using the PWRKEY 28
3.7.2. Turn off Module 30
3.7.2.1. Turn off Module Using the PWRKEY Pin 30
3.7.2.2. Turn off Module Using AT Command 30
3.8. Reset the Module 30
3.9. USIM Card Interface 32
3.10. USB Interface 34

3.11. UART Interface 36
3.12. PCM and I2C Interface 38
3.13. ADC Function 41
3.14. Network Status Indication 41
3.15. STATUS 42
3.16. Behavior of the RI 43

4 GNSS Receiver 45
4.1. General Description 45
4.2. GNSS Performance 45
4.3. Layout Guideline 46

5 Antenna Interface 47
5.1. Main/Rx-diversity Antenna Interface 47
5.1.1. Pin Definition 47
5.1.2. Operating Frequency 47
5.1.3. Reference Design 47
5.2. GNSS Antenna Interface 48
5.3. Antenna Installation 49
5.3.1. Antenna Requirement 49
5.3.2. Install the Antenna with RF Connector 50

6 Electrical, Reliability and Radio Characteristics 53
6.1. Absolute Maximum Ratings 53
6.2. Power Supply Ratings 53
6.3. Operating Temperature 54
6.4. Current Consumption 54
6.5. RF Output Power 54
6.6. RF Receiving Sensitivity 55
6.7. Electrostatic Discharge 55

7 Mechanical Dimensions 56
7.1. Mechanical Dimensions of the Module 56
7.2. Footprint of Recommendation 58
7.3. Top View of the Module 59
7.4. Bottom View of the Module 59

8 Storage and Manufacturing 60
8.1. Storage 60
8.2. Manufacturing and Welding 60
8.3. Packaging 61

9 Appendix A Reference 63

Table Index

TABLE 1: EC25 SERIES FREQUENCY BANDS 9
TABLE 2: EC25 KEY FEATURES 10
TABLE 3: IO PARAMETERS DEFINITION 16
TABLE 4: PIN DESCRIPTION 16
TABLE 5: OVERVIEW OF OPERATING MODES 21
TABLE 6: VBAT AND GND PINS 26
TABLE 7: PWRKEY PIN DESCRIPTION 28
TABLE 8: RESET_N PIN DESCRIPTION 31
TABLE 9: PIN DEFINITION OF THE USIM INTERFACE 32
TABLE 10: USB PIN DESCRIPTION 34
TABLE 11: PIN DEFINITION OF THE MAIN UART INTERFACE 36
TABLE 12: PIN DEFINITION OF THE DEBUG UART INTERFACE 36
TABLE 13: LOGIC LEVELS OF DIGITAL I/O 37
TABLE 14: PIN DEFINITION OF PCM AND I2C INTERFACE 39
TABLE 15: PIN DEFINITION OF THE ADC 41
TABLE 16: CHARACTERISTIC OF THE ADC 41
TABLE 17: PIN DEFINITION OF NETWORK INDICATOR 41
TABLE 18: WORKING STATE OF THE NETWORK INDICATOR 42
TABLE 19: PIN DEFINITION OF STATUS 43
TABLE 20: BEHAVIOR OF THE RI 44
TABLE 21: GNSS PERFORMANCE 45
TABLE 22: PIN DEFINITION OF THE RF ANTENNA 47
TABLE 23: THE MODULE OPERATING FREQUENCIES 47
TABLE 24: PIN DEFINITION OF GNSS ANTENNA 48
TABLE 25: GNSS FREQUENCY 49
TABLE 26: ANTENNA REQUIREMENTS 49
TABLE 27: ABSOLUTE MAXIMUM RATINGS 53
TABLE 28: THE MODULE POWER SUPPLY RATINGS 53
TABLE 29: OPERATING TEMPERATURE 54
TABLE 30: CONDUCTED RF OUTPUT POWER 55
TABLE 31: ELECTROSTATICS DISCHARGE CHARACTERISTICS 55
TABLE 32: RELATED DOCUMENTS 63
TABLE 33: TERMS AND ABBREVIATIONS 63
TABLE 34: DESCRIPTION OF DIFFERENT CODING SCHEMES 67

Figure Index

FIGURE 1: FUNCTIONAL DIAGRAM 12
FIGURE 2: PIN ASSIGNMENT (TOP VIEW) 15
FIGURE 3: UART SLEEP APPLICATION 22
FIGURE 4: SLEEP APPLICATION WITH USB REMOTE WAKEUP 23
FIGURE 5: SLEEP APPLICATION WITH RI 24
FIGURE 6: SLEEP APPLICATION WITHOUT SUSPEND FUNCTION 24
FIGURE 7: POWER SUPPLY LIMITS DURING TRANSMIT BURST 26
FIGURE 8: STAR STRUCTURE OF THE POWER SUPPLY 27
FIGURE 9: REFERENCE CIRCUIT OF POWER SUPPLY 27
FIGURE 10: TURN ON THE MODULE USING DRIVING CIRCUIT 28
FIGURE 11: TURN ON THE MODULE USING KEYSTROKE 29
FIGURE 12: TIMING OF TURNING ON MODULE 29
FIGURE 13: TIMING OF TURNING OFF MODULE 30
FIGURE 14: REFERENCE CIRCUIT OF RESET_N BY USING DRIVING CIRCUIT 31
FIGURE 15: REFERENCE CIRCUIT OF RESET_N BY USING BUTTON 31
FIGURE 16: TIMING OF RESETTING MODULE 32
FIGURE 17: REFERENCE CIRCUIT OF 8-PIN USIM CONNECTOR 33
FIGURE 18: REFERENCE CIRCUIT OF 6-PIN USIM CONNECTOR 33
FIGURE 19: REFERENCE CIRCUIT OF USB APPLICATION 35
FIGURE 20: REFERENCE CIRCUIT WITH TRANSLATOR CHIP 37
FIGURE 21: REFERENCE CIRCUIT WITH TRANSISTOR CIRCUIT 38
FIGURE 22: PRIMARY MODE TIMING 39
FIGURE 23: AUXILIARY MODE TIMING 39
FIGURE 24: REFERENCE CIRCUIT OF PCM APPLICATION WITH AUDIO CODEC 40
FIGURE 25: REFERENCE CIRCUIT OF THE NETWORK INDICATOR 42
FIGURE 26: REFERENCE CIRCUIT OF THE STATUS 43
FIGURE 27: REFERENCE CIRCUIT OF ANTENNA INTERFACE 48
FIGURE 28: REFERENCE CIRCUIT OF GNSS ANTENNA 49
FIGURE 29: DIMENSIONS OF THE UF.L-R-SMT CONNECTOR (UNIT: MM) 50
FIGURE 30: MECHANICALS OF UF.L-LP CONNECTORS 51
FIGURE 31: SPACE FACTOR OF MATED CONNECTOR (UNIT: MM) 52
FIGURE 32: MODULE TOP AND SIDE DIMENSIONS 56
FIGURE 33: MODULE BOTTOM DIMENSIONS (BOTTOM VIEW) 57
FIGURE 34: RECOMMENDED FOOTPRINT (TOP VIEW) 58
FIGURE 35: TOP VIEW OF THE MODULE 59
FIGURE 36: BOTTOM VIEW OF THE MODULE 59
FIGURE 37: LIQUIDS TEMPERATURE 61
FIGURE 38: CARRIER TAPE 62

1 Introduction

This document defines the EC25 module and describes its air interface and hardware interface which are connected with your application.

This document can help you quickly understand module interface specifications, electrical and mechanical details, as well as other related information of EC25 module. Associated with application notes and user guide, you can use EC25 module to design and set up mobile applications easily.

1.1. Safety Information

The following safety precautions must be observed during all phases of the operation, such as usage, service or repair of any cellular terminal or mobile incorporating EC25 module. Manufacturers of the cellular terminal should send the following safety information to users and operating personnel and to incorporate these guidelines into all manuals supplied with the product. If not so, Quectel assumes no liability for the customer's failure to comply with these precautions.

	Full attention must be given to driving at all times in order to reduce the risk of an accident. Using a mobile while driving (even with a handsfree kit) causes distraction and can lead to an accident. You must comply with laws and regulations restricting the use of wireless devices while driving.
	Switch off the cellular terminal or mobile before boarding an aircraft. Make sure it is switched off. The operation of wireless appliances in an aircraft is forbidden, so as to prevent interference with communication systems. Consult the airline staff about the use of wireless devices on boarding the aircraft, if your device offers a Airplane Mode which must be enabled prior to boarding an aircraft.
	Switch off your wireless device when in hospitals, clinics or other health care facilities. These requests are desinged to prevent possible interference with sentitive medical equipment.

	Cellular terminals or mobiles operating over radio frequency signal and cellular network cannot be guaranteed to connect in all conditions, for example no mobile fee or with an invalid SIM card. While you are in this condition and need emergent help, please remember using emergency call. In order to make or receive a call, the cellular terminal or mobile must be switched on and in a service area with adequate cellular signal strength.
	Your cellular terminal or mobile contains a transmitter and receiver. When it is ON , it receives and transmits radio frequency energy. RF interference can occur if it is used close to TV set, radio, computer or other electric equipment.
	In locations with potencially explosive atmospheres, obey all posted signs to turn off wireless devices such as your phone or other cellular terminals. Areas with potencially explosive atmospheres include fuelling areas, below decks on boats, fuel or chemical transfer or storage facilities, areas where the air contains chemicals or particles such as grain, dust or metal powders, etc.

2 Product Concept

2.1. General Description

EC25 contains four variants: EC25-E, EC25-A, EC25-V and EC25-AUT. You can choose the dedicated type based on the region or operator. The following table shows the frequency bands of EC25 series modules.

Table 1: EC25 Series Frequency Bands

	EC25-V
FDD-LTE (with Rx-diversity)	B4/B13
TDD-LTE (with Rx-diversity)	Not supported
WCDMA (with Rx-diversity)	Not supported
GSM	Not supported
GNSS	GPS,GLONASS, BeiDou/Compass,Galileo,QZSS

NOTES

1. [1)] GNSS function is optional.
2. [2)] EC25-V includes **Data-only** and **Telematics** versions. **Data-only** version does not support voice function, while **Telematics** version supports it.

With a tiny profile of 32.0mm × 29.0mm × 2.4mm, EC25 can meet almost all requirements for M2M applications such as automotive, metering, tracking system, security, router, wireless POS, mobile computing device, PDA phone and tablet PC, etc.
EC25 is an SMD type module which can be embedded in applications through its 144-pin pads, including 80 LCC signal pads and 64 other pads.

2.2. Directives and Standards

2.2.1. FCC Statement

Any Changes or modifications not expressly approved by the party responsible for compliance could void the user's authority to operate the equipment.

This device complies with part 15 of the FCC Rules. Operation is subject to the following two conditions: (1) This device may not cause harmful interference, and (2) this device must accept any interference received, including interference that may cause undesired operation.

2.3. Key Features

The following table describes the detailed features of EC25 module.

Table 2: EC25 Key Features

Feature	Details
Power Supply	Supply voltage: 3.3V~4.3V Typical supply voltage: 3.8V
Transmitting Power	Support up to non-CA CAT4 Support 1.4 to 20MHz RF bandwidth FDD: Max 50Mbps (UL), 150Mbps (DL) TDD: Max 35Mbps (UL), 130Mbps (DL)
LTE Features	Support 16-QAM, 64-QAM and QPSK modulation
Internet Protocol Features	Text and PDU mode Point to point MO and MT SMS cell broadcast SMS storage: ME by default
SMS	Support USIM/SIM card: 1.8V, 3.0V
USIM Interface	Used for audio function with external codec Support 8-bit A-law, μ-law and 16-bit linear data formats Support long frame sync and short frame sync

	Support master and slave mode, but must be the master in long frame sync
Audio Features	Compliant with USB 2.0 specification (slave only); the data transfer rate can reach up to 480Mbps Used for AT command communication, data transmission, GNSS NMEA output, software debug and firmware upgrade **USB Driver**: Windows XP, Windows Vista, Windows 7, Windows 8/8.1, Window CE 5.0/6.0/7.0, Linux 2.6 or later, Android 2.3/4.0/4.2/4.4/5.0
PCM Interface	**Main UART:** Used for AT command and data transmission Baud rate reach up to 921600bps, 115200bps by default Support RTS and CTS hardware flow control **Debug UART:** Used for Linux console, log output 115200bps baud rate
USB Interface	Support LTE Rx-diversity
UART Interface	Gen8C-Lite of Qualcomm Protocol: NMEA 0183
GNSS Features	Two pins including NET_MODE and NET_STATUS to indicate network connectivity status
AT Commands	Including main antenna (ANT_MAIN), Rx-diversity antenna (ANT_DIV) and GNSS antenna (ANT_GNSS)
Network Indication	Size: 32.0±0.15 × 29.0±0.15 × 2.4±0.2mm Weight: approx. 4.9g
Antenna Interface	Normal operation: -35°C ~ +75°C Restricted operation: -40°C ~ -35°C and +75°C ~ +85℃ Storage temperature: -45°C ~ +90°C
Physical Characteristics	USB interface
Temperature Range	All hardware components are fully compliant with EU RoHS directive
Firmware Upgrade	
RoHS	

2.4. Functional Diagram

The following figure shows a block diagram of EC25 and illustrates the major functional parts.

- Power management
- Baseband
- DDR+NAND flash
- Radio frequency
- Peripheral interface

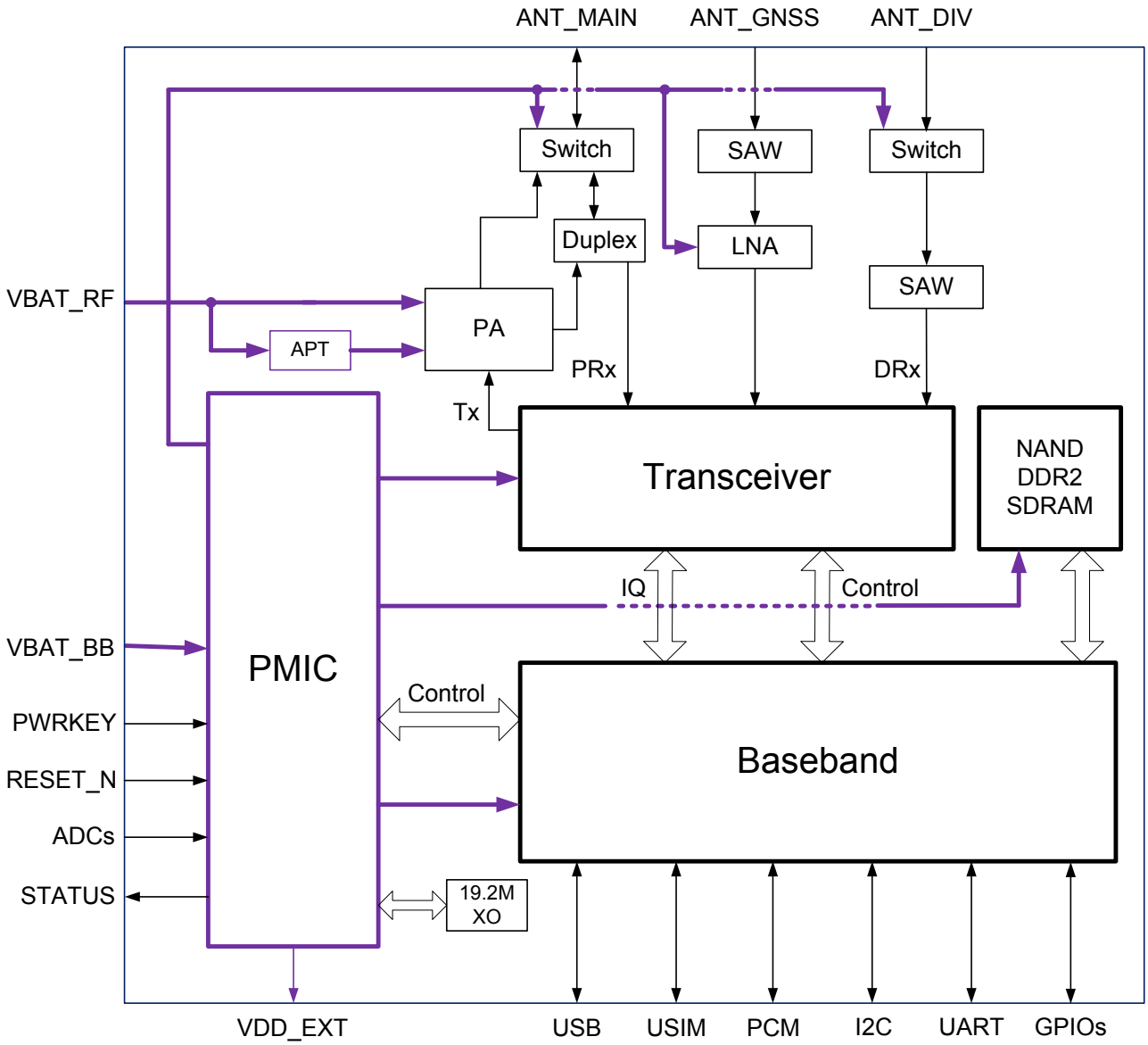

Figure 1: Functional Diagram

2.5. Evaluation Board

In order to help you to develop applications with EC25, Quectel supplies an evaluation board (EVB), USB data cable, earphone, antenna and other peripherals to control or test the module.

3 Application Interface

3.1. General Description

EC25 is equipped with an 80-pin SMT pad plus 64-pin ground pads and reserved pads that can be connected to cellular application platform. Sub-interfaces included in these pads are described in detail in the following chapters:

- Power supply
- USIM interface
- USB interface
- UART interface
- PCM interface
- ADC interface
- Status indication

3.2. Pin Assignment

The following figure shows the pin assignment of the EC25 module.

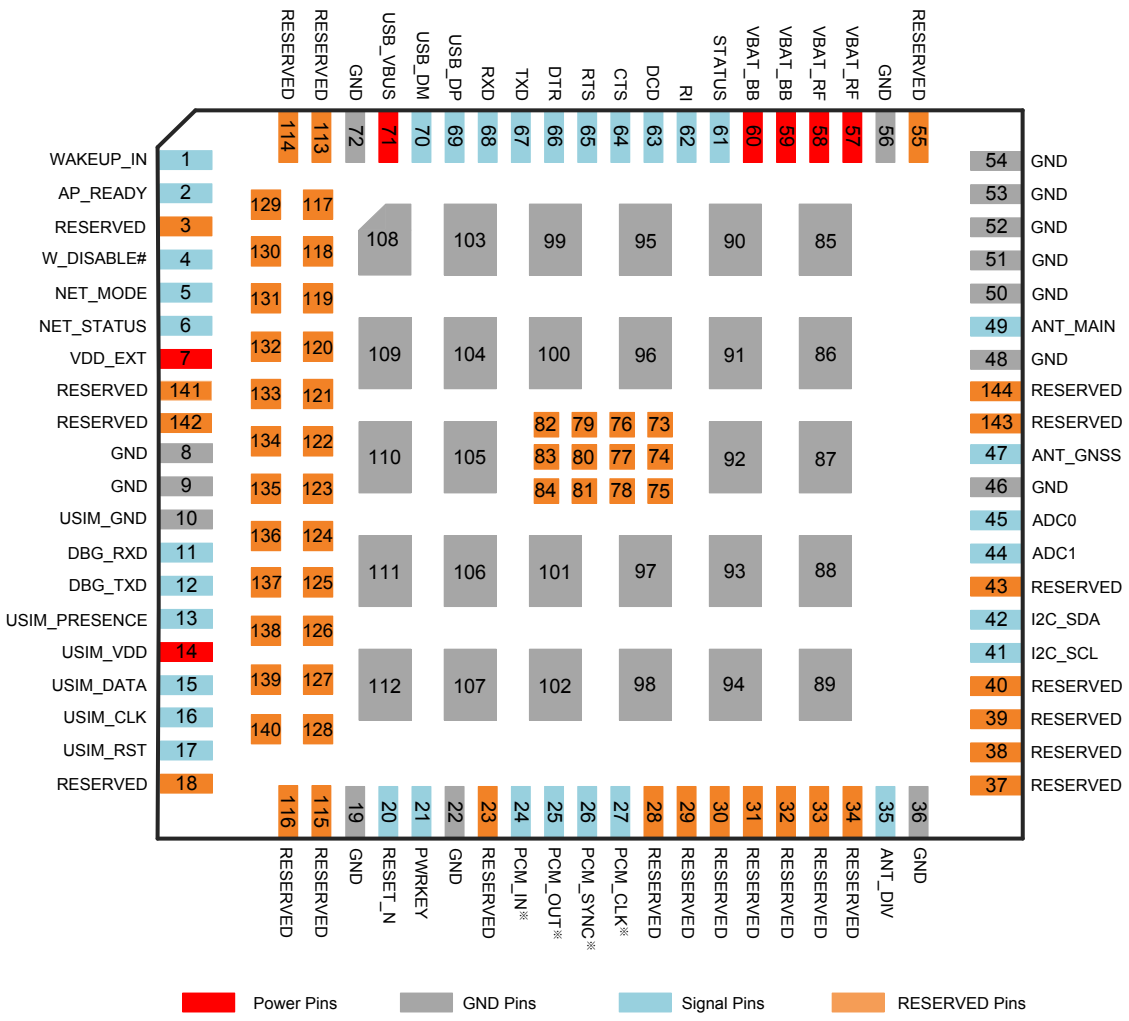

Figure 2: Pin Assignment (Top View)

NOTES

1. Keep all RESERVED pins and unused pins unconnected.
2. GND pads 85~112 should be connected to ground in the design, and RESERVED pads 73~84 should not be designed in schematic and PCB decal.
3. "※" means these interface functions are only supported on **Telematics** version.

3.3. Pin Description

The following tables show the EC25's pin definition.

Table 3: IO Parameters Definition

Type	Description
IO	Bidirectional input/output
DI	Digital input
DO	Digital output
PI	Power input
PO	Power output
AI	Analog input
AO	Analog output
OD	Open drain

Table 4: Pin Description

Power Supply					
Pin Name	**Pin No.**	**I/O**	**Description**	**DC Characteristics**	**Comment**
VBAT_BB	59, 60	PI	Power supply for module baseband part.	Vmax=4.3V Vmin=3.3V Vnorm=3.8V	It must be able to provide sufficient current up to 0.8A.
VBAT_RF	57, 58	PI	Power supply for module RF part.	Vmax=4.3V Vmin=3.3V Vnorm=3.8V	It must be able to provide sufficient current up to 1.8A in a transmitting burst.
VDD_EXT	7	PO	Provide 1.8V for external circuit.	Vnorm=1.8V $I_O$max=50mA	Power supply for external GPIO's pull up circuits.
GND	8, 9, 19, 22, 36, 46, 48, 50~54, 56, 72,		Ground.		

	85~112				
Turn on/off					
Pin Name	**Pin No.**	**I/O**	**Description**	**DC Characteristics**	**Comment**
PWRKEY	21	DI	Turn on/off the module.	V_{IH}max=2.1V V_{IH}min=1.3V V_{IL}max=0.5V	
RESET_N	20	DI	Reset the module.	V_{IH}max=2.1V V_{IH}min=1.3V V_{IL}max=0.5V	
Status Indication					
Pin Name	**Pin No.**	**I/O**	**Description**	**DC Characteristics**	**Comment**
STATUS	61	OD	Indicate the module operating status.	The drive current should be less than 0.9mA.	Require external pull-up. If unused, keep it open.
NET_MODE	5	DO	Indicate the module network registration mode.	V_{OH}min=1.35V V_{OL}max=0.45V	1.8V power domain. If unused, keep it open.
NET_ STATUS	6	DO	Indicate the module network activity status.	V_{OH}min=1.35V V_{OL}max=0.45V	1.8V power domain. If unused, keep it open.
USB Interface					
Pin Name	**Pin No.**	**I/O**	**Description**	**DC Characteristics**	**Comment**
USB_VBUS	71	PI	USB detection.	Vnorm=5.0V	
USB_DP	69	IO	USB differential data bus.	Compliant with USB 2.0 standard specification.	Require differential impedance of 90ohm.
USB_DM	70	IO	USB differential data bus.	Compliant with USB 2.0 standard specification.	Require differential impedance of 90ohm.
USIM Interface					
Pin Name	**Pin No.**	**I/O**	**Description**	**DC Characteristics**	**Comment**
USIM_GND	10		Specified ground for USIM card.		
USIM_VDD	14	PO	Power supply for USIM card.	For 1.8V USIM: Vmax=1.9V Vmin=1.7V	Either 1.8V or 3V is supported by the module automatically.

				For 3.0V USIM: Vmax=3.05V Vmin=2.7V $I_O$max=50mA	
USIM_DATA	15	IO	Data signal of USIM card.	For 1.8V USIM: V_{IL}max=0.6V V_{IH}min=1.2V V_{OL}max=0.45V V_{OH}min=1.35V For 3.0V USIM: V_{IL}max=1.0V V_{IH}min=1.95V V_{OL}max=0.45V V_{OH}min=2.55V	
USIM_CLK	16	DO	Clock signal of USIM card.	For 1.8V USIM: V_{OL}max=0.45V V_{OH}min=1.35V For 3.0V USIM: V_{OL}max=0.45V V_{OH}min=2.55V	
USIM_RST	17	DO	Reset signal of USIM card.	For 1.8V USIM: V_{OL}max=0.45V V_{OH}min=1.35V For 3.0V USIM: V_{OL}max=0.45V V_{OH}min=2.55V	
USIM_ PRESENCE	13	DI	USIM card insertion detection.	V_{IL}min=-0.3V V_{IL}max=0.6V V_{IH}min=1.2V V_{IH}max=2.0V	1.8V power domain. If unused, keep it open.
UART Interface					
Pin Name	**Pin No.**	**I/O**	**Description**	**DC Characteristics**	**Comment**
RI	62	DO	Ring indicator	V_{OL}max=0.45V V_{OH}min=1.35V	1.8V power domain. If unused, keep it open.
DCD	63	DO	Data carrier detection.	V_{OL}max=0.45V V_{OH}min=1.35V	1.8V power domain. If unused, keep it open.

CTS	64	DO	Clear to send.	V_{OL}max=0.45V V_{OH}min=1.35V	1.8V power domain. If unused, keep it open.
RTS	65	DI	Request to send.	V_{IL}min=-0.3V V_{IL}max=0.6V V_{IH}min=1.2V V_{IH}max=2.0V	1.8V power domain. If unused, keep it open.
DTR	66	DI	Data terminal ready, sleep mode control.	V_{IL}min=-0.3V V_{IL}max=0.6V V_{IH}min=1.2V V_{IH}max=2.0V	1.8V power domain. Pull-up by default. Low level wakes up the module. If unused, keep it open.
TXD	67	DO	Transmit data.	V_{OL}max=0.45V V_{OH}min=1.35V	1.8V power domain. If unused, keep it open.
RXD	68	DI	Receive data.	V_{IL}min=-0.3V V_{IL}max=0.6V V_{IH}min=1.2V V_{IH}max=2.0V	1.8V power domain. If unused, keep it open.
Debug UART Interface					
Pin Name	**Pin No.**	**I/O**	**Description**	**DC Characteristics**	**Comment**
DBG_TXD	12	DO	Transmit data.	V_{OL}max=0.45V V_{OH}min=1.35V	1.8V power domain. If unused, keep it open.
DBG_RXD	11	DI	Receive data.	V_{IL}min=-0.3V V_{IL}max=0.6V V_{IH}min=1.2V V_{IH}max=2.0V	1.8V power domain. If unused, keep it open.
ADC Interface					
Pin Name	**Pin No.**	**I/O**	**Description**	**DC Characteristics**	**Comment**
ADC0	45	AI	General purpose analog to digital converter.	Voltage range: 0.3V to VBAT_BB	If unused, keep it open.
ADC1	44	AI	General purpose analog to digital converter.	Voltage range: 0.3V to VBAT_BB	If unused, keep it open.
PCM Interface					
Pin Name	**Pin No.**	**I/O**	**Description**	**DC Characteristics**	**Comment**

PCM_IN	24	DI	PCM data input.	V_{IL}min=-0.3V V_{IL}max=0.6V V_{IH}min=1.2V V_{IH}max=2.0V	1.8V power domain. If unused, keep it open.
PCM_OUT	25	DO	PCM data output.	V_{OL}max=0.45V V_{OH}min=1.35V	1.8V power domain. If unused, keep it open.
PCM_SYNC	26	IO	PCM data frame sync signal.	V_{OL}max=0.45V V_{OH}min=1.35V V_{IL}min=-0.3V V_{IL}max=0.6V V_{IH}min=1.2V V_{IH}max=2.0V	1.8V power domain. In master mode, it is an output signal. In slave mode, it is an input signal. If unused, keep it open.
PCM_CLK	27	IO	PCM clock.	V_{OL}max=0.45V V_{OH}min=1.35V V_{IL}min=-0.3V V_{IL}max=0.6V V_{IH}min=1.2V V_{IH}max=2.0V	1.8V power domain. In master mode, it is an output signal. In slave mode, it is an input signal. If unused, keep it open.
I2C Interface					
Pin Name	**Pin No.**	**I/O**	**Description**	**DC Characteristics**	**Comment**
I2C_SCL	41	OD	I2C serial clock. Used for external codec.		External pull-up resistor is required. 1.8V only. If unused, keep it open.
I2C_SDA	42	OD	I2C serial data. Used for external codec.		External pull-up resistor is required. 1.8V only. If unused, keep it open.
RF Interface					
Pin Name	**Pin No.**	**I/O**	**Description**	**DC Characteristics**	**Comment**
ANT_DIV	35	AI	Diversity antenna.	50ohm impedance.	If unused, keep it open.
ANT_MAIN	49	IO	Main antenna.	50ohm impedance.	
ANT_GNSS	47	AI	GNSS antenna.	50ohm impedance.	If unused, keep it open.
GPIO Pins					
Pin Name	**Pin No.**	**I/O**	**Description**	**DC Characteristics**	**Comment**

WAKEUP_IN	1	DI	Sleep mode control.	V_{IL}min=-0.3V V_{IL}max=0.6V V_{IH}min=1.2V V_{IH}max=2.0V	1.8V power domain. Pull-up by default. Low level wakes up the module. If unused, keep it open.
W_DISABLE#	4	DI	Airplane mode control.	V_{IL}min=-0.3V V_{IL}max=0.6V V_{IH}min=1.2V V_{IH}max=2.0V	1.8V power domain. Pull-up by default. In low voltage level, module can enter into airplane mode. If unused, keep it open.
AP_READY	2	DI	Application processor sleep state detection.	V_{IL}min=-0.3V V_{IL}max=0.6V V_{IH}min=1.2V V_{IH}max=2.0V	1.8V power domain. If unused, keep it open.
RESERVED Pins					
Pin Name	**Pin No.**	**I/O**	**Description**	**DC Characteristics**	**Comment**
RESERVED	3, 18, 23, 28~34, 37~40, 43, 55, 73~84, 113~144		Reserved.		Keep these pins unconnected.

3.4. Operating Modes

The table below briefly summarizes the various operating modes referred in the following chapters.

Table 5: Overview of Operating Modes

Mode	Details	
Normal Operation	Idle	Software is active. The module has registered to the network, and it is ready to send and receive data.
	Talk/Data	Network connection is ongoing. In this mode, the power consumption is decided by network setting and data transfer rate.
Minimum Functionality Mode	**AT+CFUN** command can set the module entering into a minimum functionality mode without removing the power supply. In this case, both RF function and USIM card will be invalid.	
Airplane Mode	**AT+CFUN** command or W_DISABLE# pin can set the module entering into airplane mode. In this case, RF function will be invalid.	

Sleep Mode	In this mode, the current consumption of the module will be reduced to the minimal level. During this mode, the module can still receive paging message, SMS, voice call and TCP/UDP data from the network normally.
Power Down Mode	In this mode, the power management unit shuts down the power supply. Software is not active. The serial interface is not accessible. Operating voltage (connected to VBAT_RF and VBAT_BB) remains applied.

3.5. Power Saving

3.5.1. Sleep Mode

EC25 is able to reduce its current consumption to a minimum value during the sleep mode. The following section describes EC25's power saving procedure.

3.5.1.1. UART Application

If host communicates with module via UART interface, the following preconditions can let the module enter into the sleep mode.

- Execute AT command **AT+QSCLK=1** to enable the sleep mode.
- Drive DTR to high level.

The following figure shows the connection between the module and the host.

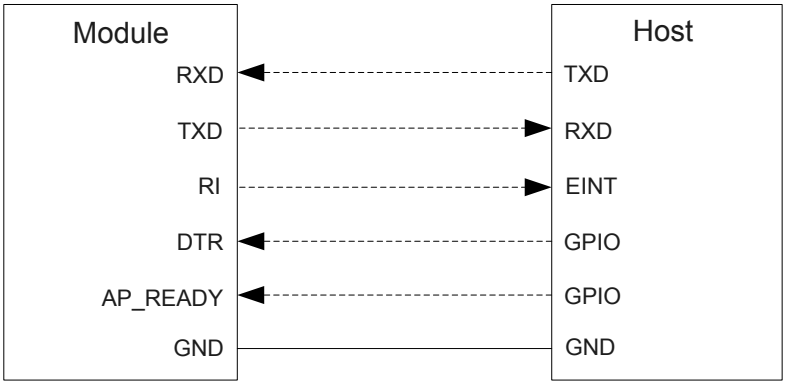

Figure 3: UART Sleep Application

- Driving host DTR to low level will wake up the module.
- When EC25 has URC to report, RI signal will wake up the host. Refer to ***Chapter 3.16*** for details about RI behavior.
- AP_READY will detect the sleep state of host (can be configured to high level or low level detection).

Refer to AT command **AT+QCFG="apready"** for details.

3.5.1.2. USB Application with USB Remote Wakeup Function

If host supports USB suspend/resume and remote wakeup function, the following part will show the sleep application.

There are three preconditions to let the module enter into the sleep mode.

- Execute AT command **AT+QSCLK=1** to enable the sleep mode.
- Ensure the DTR is held in high level or keep it open.
- The host's USB bus, which is connected with the module's USB interface, enters into suspended state.

The following figure shows the connection between the module and the host.

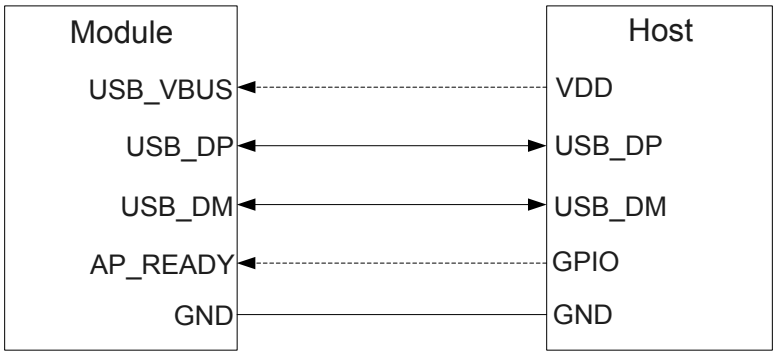

Figure 4: Sleep Application with USB Remote Wakeup

- Sending data to EC25 through USB will wake up the module.
- When EC25 has URC to report, the module will send remote wake-up signals to USB BUS so as to wake up the host.

3.5.1.3. USB Application with USB Suspend/Resume and RI Function

If host supports USB suspend/resume, but does not support remote wake-up function, the RI signal is needed to wake up the host. The following part will show the sleep application.

There are three preconditions to let the module enter into the sleep mode.

- Execute AT command **AT+QSCLK=1** to enable the sleep mode.
- Ensure the DTR is held in high level or keep it open.
- The host's USB bus, which is connected with the module's USB interface, enters into suspended

state.

The following figure shows the connection between the module and the host.

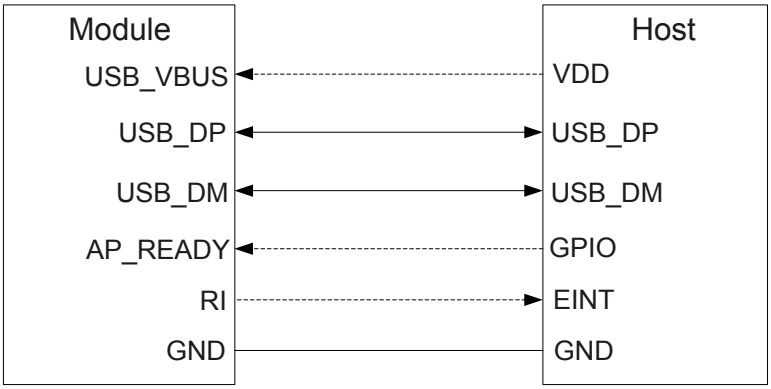

Figure 5: Sleep Application with RI

- Sending data to EC25 through USB will wake up the module.
- When EC25 has URC to report, RI signal will wake up the host.

3.5.1.4. USB Application without USB Suspend Function

If host does not support USB suspend function, you should disconnect USB_VBUS with additional control circuit to let the module enter into sleep mode.

- Execute AT command **AT+QSCLK=1** to enable the sleep mode.
- Ensure the DTR is held in high level or keep it open.
- Disconnect USB_VBUS.

The following figure shows the connection between the module and the host.

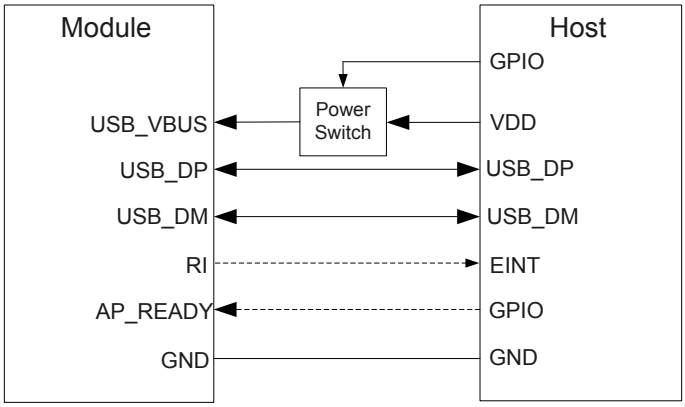

Figure 6: Sleep Application without Suspend Function

Opening power switch to supply power to USB_VBUS will wake up the module.

NOTE

You should pay attention to the level match shown in dotted line between module and host. Refer to ***document [1]*** for more details about EC25 power management application.

3.5.2. Airplane Mode

When the module enters into airplane mode, the RF function does not work, and all AT commands correlative with RF function will be inaccessible. This mode can be set with the following ways.

Hardware:

The W_DISABLE# pin is pulled up by default; driving it to low level will let the module enter into airplane mode.

Software:

Command **AT+CFUN** provides the choice of the functionality level <fun>=0, 1, 4.

- **AT+CFUN=0:** Minimum functionality mode; both USIM and RF function are disabled.
- **AT+CFUN=1:** Full functionality mode (by default).
- **AT+CFUN=4:** Airplane mode. RF function is disabled.

NOTES

1. The W_DISABLE# control function is disabled in firmware by default. It can be enabled by AT command **AT+QCFG="airplanecontrol"**. Refer to ***document [2]*** for details.
2. The execution of **AT+CFUN** command will not affect GNSS function.

3.6. Power Supply

3.6.1. Power Supply Pins

EC25 provides four VBAT pins dedicated to connect with the external power supply. There are two separate voltage domains for VBAT.

- VBAT_RF with two pins for module RF part.
- VBAT_BB with two pins for module baseband part.

The following table shows the VBAT pins and ground pins.

Table 6: VBAT and GND Pins

Pin Name	Pin No.	Description	Min.	Typ.	Max.	Unit
VBAT_RF	57, 58	Power supply for module RF part.	3.3	3.8	4.3	V
VBAT_BB	59, 60	Power supply for module baseband part.	3.3	3.8	4.3	V
GND	8, 9, 19, 22, 36, 46, 48, 50~54, 56, 72, 85~112	Ground.	-	0	-	V

3.6.2. Decrease Voltage Drop

The power supply range of the module is from 3.3V to 4.3V. Make sure the input voltage will never drop below 3.3V. The following figure shows the voltage drop during transmitting burst in 4G network.

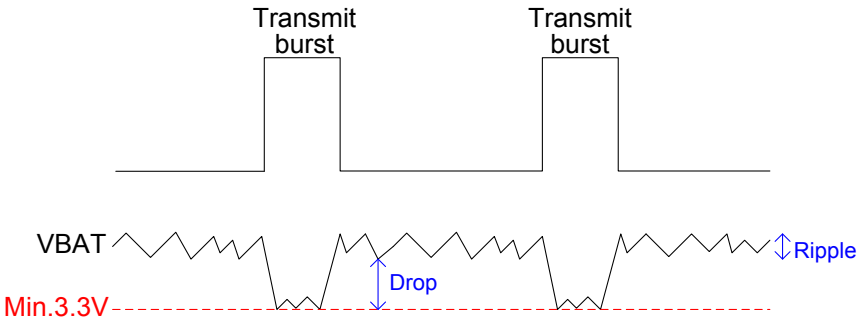

Figure 7: Power Supply Limits during Transmit Burst

To decrease voltage drop, a bypass capacitor of about 100μF with low ESR should be used. Multi-layer ceramic chip (MLCC) capacitor can provide the best combination of low ESR. The main power supply from an external application has to be a single voltage source and expanded to two sub paths with star structure. The width of VBAT_BB trace should be no less than 1mm; and the width of VBAT_RF trace should be no less than 2mm. In principle, the longer the VBAT trace is, the wider it will be.

Three ceramic capacitors (100nF, 33pF, 10pF) are recommended to be applied to the VBAT pins. The capacitors should be placed close to the VBAT pins. In addition, in order to get a stable power source, it is suggested that you should use a zener diode of which reverse zener voltage is 5.1V and dissipation power is more than 0.5W. The following figure shows the star structure of the power supply.

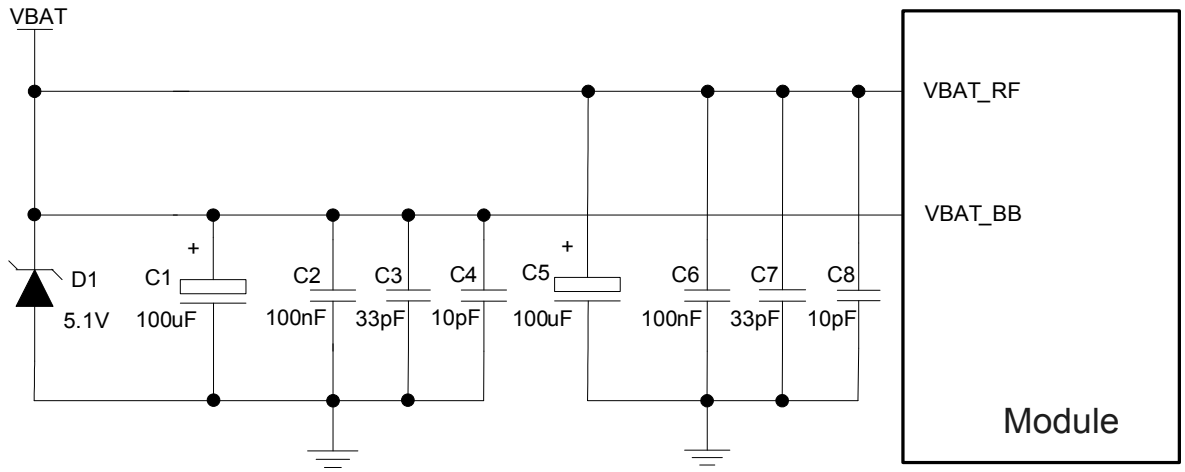

Figure 8: Star Structure of the Power Supply

3.6.3. Reference Design for Power Supply

The power design for the module is very important, as the performance of the module largely depends on the power source. The power supply is capable of providing sufficient current up to 2A at least. If the voltage drop between the input and output is not too high, it is suggested that you should use a LDO to supply power for module. If there is a big voltage difference between the input source and the desired output (VBAT), a buck converter is preferred to be used as a power supply.

The following figure shows a reference design for +5V input power source. The designed output for the power supply is about 3.8V and the maximum load current is 3A.

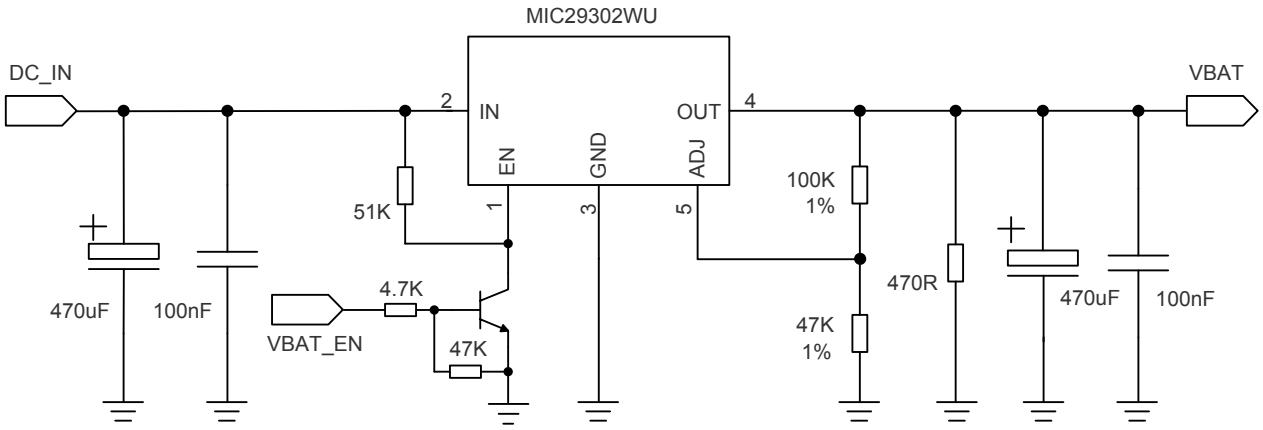

Figure 9: Reference Circuit of Power Supply

3.6.4. Monitor the Power Supply

You can use the **AT+CBC** command to monitor the VBAT_BB voltage value. For more details, please refer to ***document [2]***.

3.7. Turn on and off Scenarios

3.7.1. Turn on Module Using the PWRKEY

The following table shows the pin definition of PWRKEY.

Table 7: PWRKEY Pin Description

Pin Name	Pin No.	Description	DC Characteristics	Comment
PWRKEY	21	Turn on/off the module.	V_{IH}max=2.1V V_{IH}min=1.3V V_{IL}max=0.5V	

When EC25 is in power down mode, it can be turned on to normal mode by driving the PWRKEY pin to a low level for at least 100ms. It is recommended to use an open drain/collector driver to control the PWRKEY. After STATUS pin (require external pull-up) outputting a low level, PWRKEY pin can be released. A simple reference circuit is illustrated in the following figure.

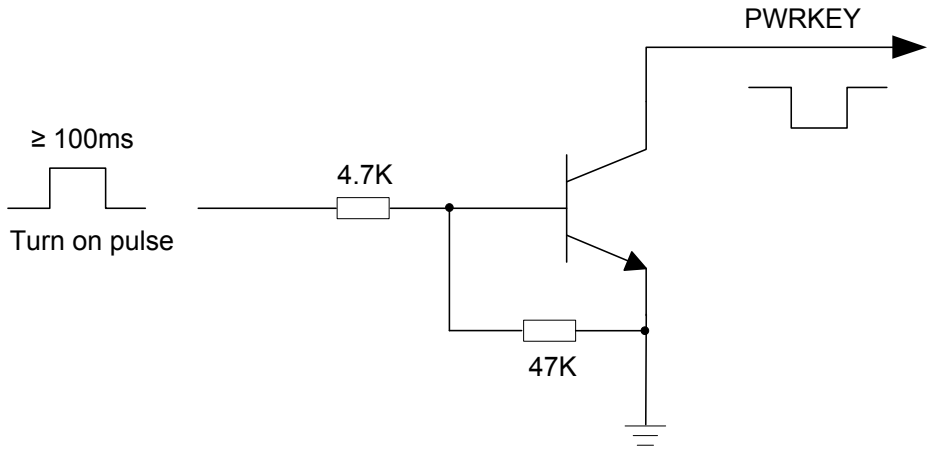

Figure 10: Turn on the Module Using Driving Circuit

The other way to control the PWRKEY is using a button directly. A TVS component is indispensable to be placed nearby the button for ESD protection. When pressing the key, electrostatic strike may generate from finger. A reference circuit is shown in the following figure.

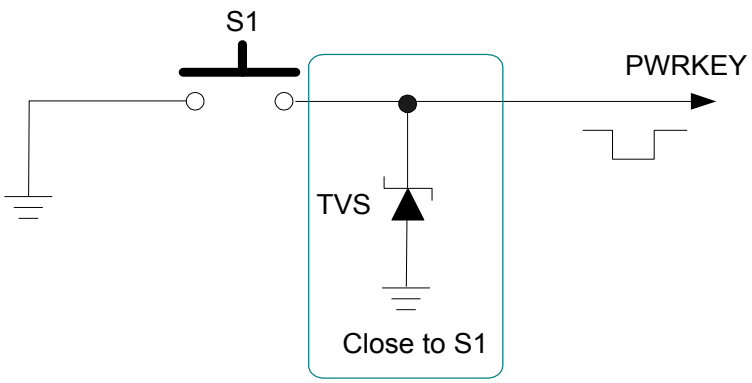

Figure 11: Turn on the Module Using Keystroke

The turn on scenario is illustrated in the following figure.

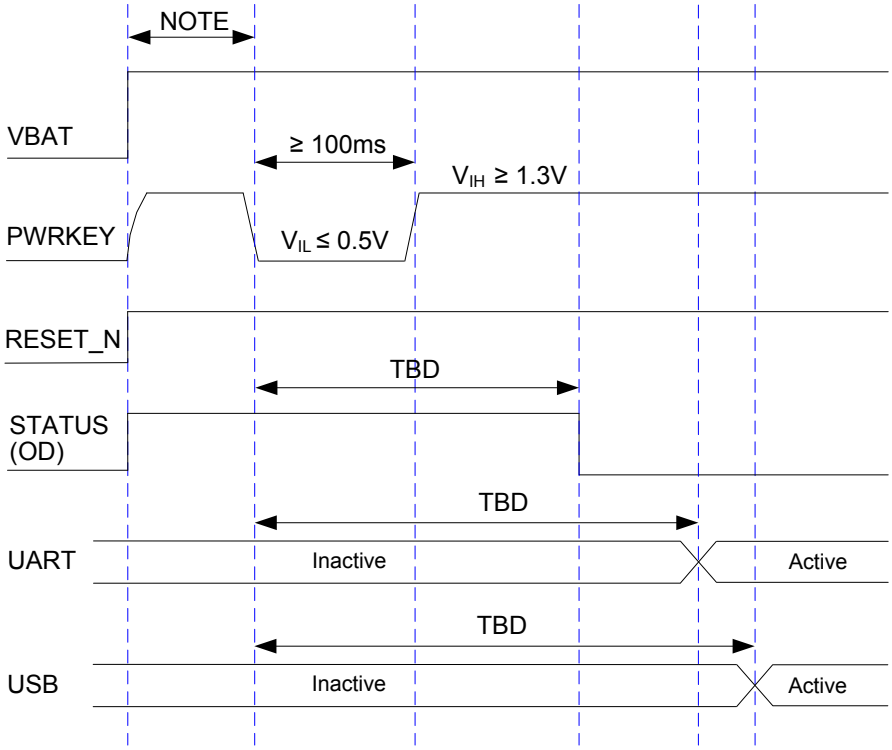

Figure 12: Timing of Turning on Module

NOTE

Make sure that VBAT is stable before pulling down PWRKEY pin. The time between them is no less than 30ms.

3.7.2. Turn off Module

The following procedures can be used to turn off the module:

- Normal power down procedure: Turn off the module using the PWRKEY pin.
- Normal power down procedure: Turn off the module using command **AT+QPOWD**.

3.7.2.1. Turn off Module Using the PWRKEY Pin

Driving the PWRKEY to a low level voltage, the module will execute power-down procedure after the PWRKEY is released. The power-down scenario is illustrated in the following figure.

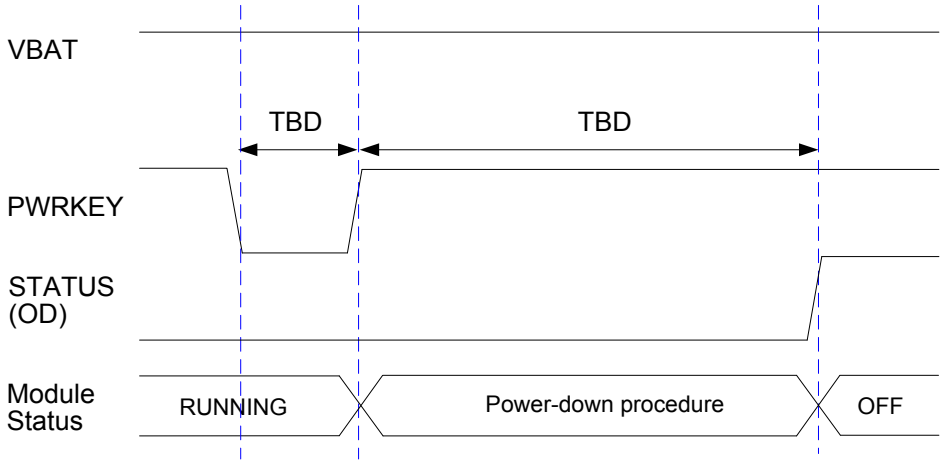

Figure 13: Timing of Turning off Module

3.7.2.2. Turn off Module Using AT Command

It is also a safe way to use AT command **AT+QPOWD** to turn off the module, which is similar to turning off the module via PWRKEY Pin.

Please refer to ***document [2]*** for details about the AT command of **AT+QPOWD**.

3.8. Reset the Module

The RESET_N can be used to reset the module. You can reset the module by driving the RESET_N to a low level voltage for time between Treset_min and Treset_max.

Table 8: RESET_N Pin Description

Pin Name	Pin No.	Description	DC Characteristics	Comment
RESET_N	20	Reset the module.	V_{IH}max=2.1V V_{IH}min=1.3V V_{IL}max=0.5V	

The recommended circuit is similar to the PWRKEY control circuit. You can use an open drain/collector driver or button to control the RESET_N.

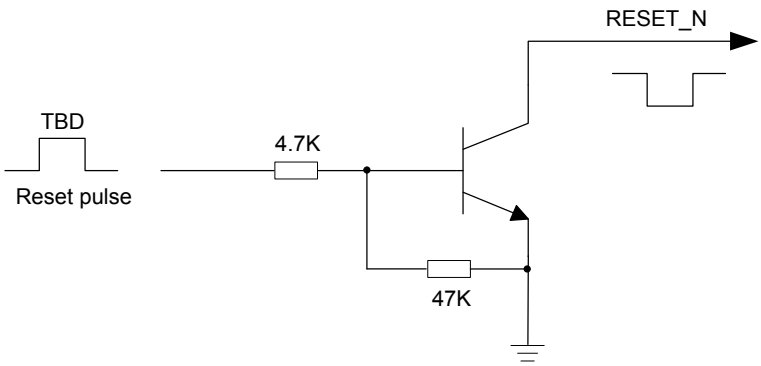

Figure 14: Reference Circuit of RESET_N by Using Driving Circuit

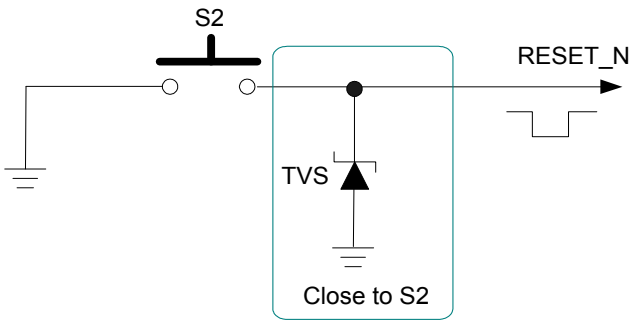

Figure 15: Reference Circuit of RESET_N by Using Button

The reset scenario is illustrated in the following figure.

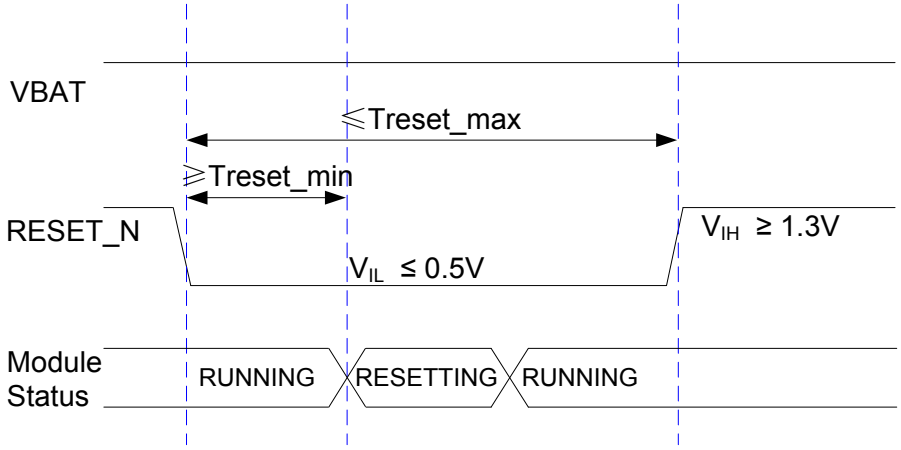

Figure 16: Timing of Resetting Module

NOTES

1. Use the RESET_N only when turning off the module by the command **AT+QPOWD** and the PWRKEY pin failed.
2. Ensure that there is no large capacitance on the PWRKEY and RESET_N pins.

3.9. USIM Card Interface

The USIM card interface circuitry meets ETSI and IMT-2000 SIM interface requirements. Both 1.8V and 3.0V USIM cards are supported.

Table 9: Pin Definition of the USIM Interface

Pin Name	Pin No.	I/O	Description	Comment
USIM_VDD	14	PO	Power supply for USIM card.	Either 1.8V or 3.0V is supported by the module automatically.
USIM_DATA	15	IO	Data signal of USIM card.	
USIM_CLK	16	DO	Clock signal of USIM card.	
USIM_RST	17	DO	Reset signal of USIM card.	
USIM_ PRESENCE	13	DI	USIM card insertion detection.	
USIM_GND	10		Specified ground for USIM card.	

EC25 supports USIM card hot-plug via the USIM_PRESENCE pin. It supports low level and high level detections, which is disabled by default. For details, refer to ***document [2]*** about the command **AT+QSIMDET**.

The following figure shows the reference design of the 8-pin USIM connector.

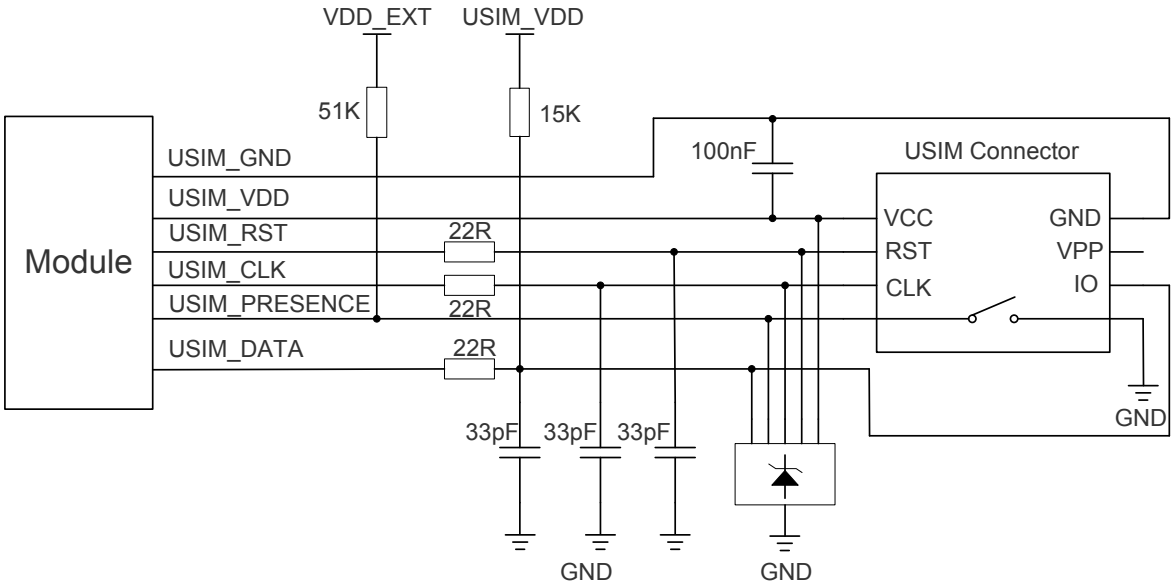

Figure 17: Reference Circuit of 8-Pin USIM Connector

If you do not need the USIM card detection function, keep USIM_PRESENCE unconnected. The reference circuit for using a 6-pin USIM card connector is illustrated in the following figure.

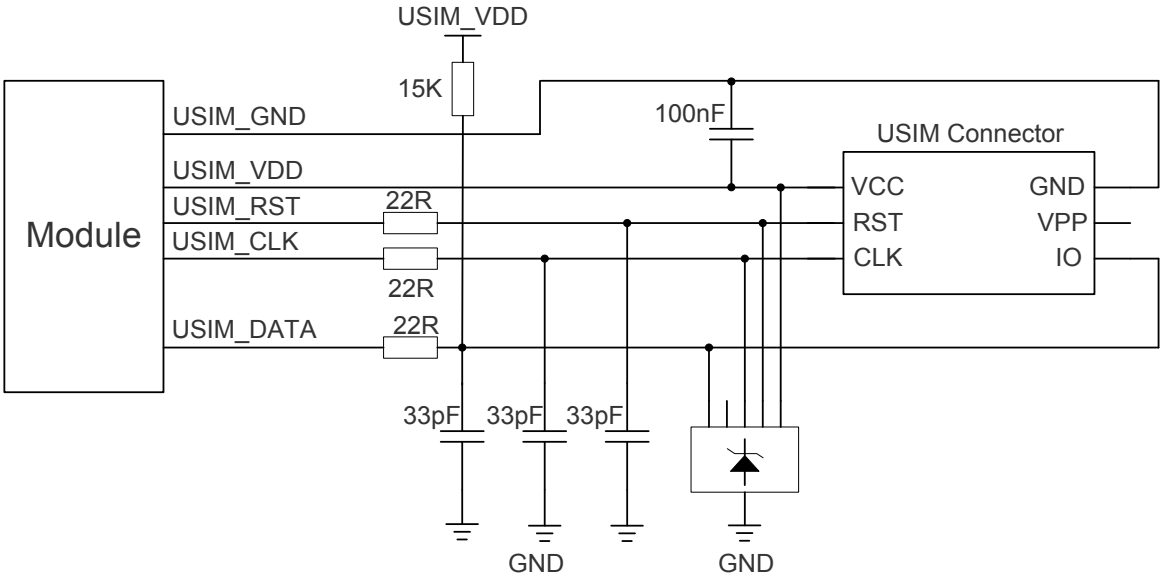

Figure 18: Reference Circuit of 6-Pin USIM Connector

In order to enhance the reliability and availability of the USIM card in your application, please follow the

criteria below in the USIM circuit design:

- Keep layout of USIM card as close as possible to the module. Assure the length of trace is less than 200mm.
- Keep USIM card signal away from RF and VBAT alignment.
- Assure the ground between the module and the USIM connector short and wide. Keep the width of ground and USIM_VDD no less than 0.5mm to maintain the same electric potential.
- To avoid cross-talk between USIM_DATA and USIM_CLK, keep them away with each other and shield them with surrounded ground.
- In order to offer good ESD protection, it is recommended to add TVS which parasitic capacitance should not be more than 50pF. The 22ohm resistors should be added in series between the module and the USIM card so as to suppress the EMI spurious transmission and enhance the ESD protection. The 33pF capacitors are used for filtering interference of GSM900. Please note that the USIM peripheral circuit should be close to the USIM connector.
- The pull-up resistor on USIM_DATA line can improve anti-jamming capability when long layout trace and sensitive occasion are applied, and should be placed close to the USIM connector.

3.10. USB Interface

EC25 contains one integrated Universal Serial Bus (USB) transceiver which complies with the USB 2.0 specification and supports high-speed (480Mbps) and full-speed (12Mbps) modes. The USB interface is used for AT command, data transmission, GNSS NMEA sentences output, software debug and firmware upgrade. The following table shows the pin definition of USB interface.

Table 10: USB Pin Description

Pin Name	Pin No.	I/O	Description	Comment
USB_DP	69	IO	USB differential data bus (positive).	Require differential impedance of 90Ω.
USB_DM	70	IO	USB differential data bus (minus).	Require differential impedance of 90Ω.
USB_VBUS	71	PI	Used for detecting the USB connection.	Typical 5.0V
GND	72		Ground	

More details about the USB 2.0 specifications, please visit http://www.usb.org/home.

The USB interface is recommended to be reserved for firmware upgrade in your design. The following figure shows the reference circuit of USB interface.

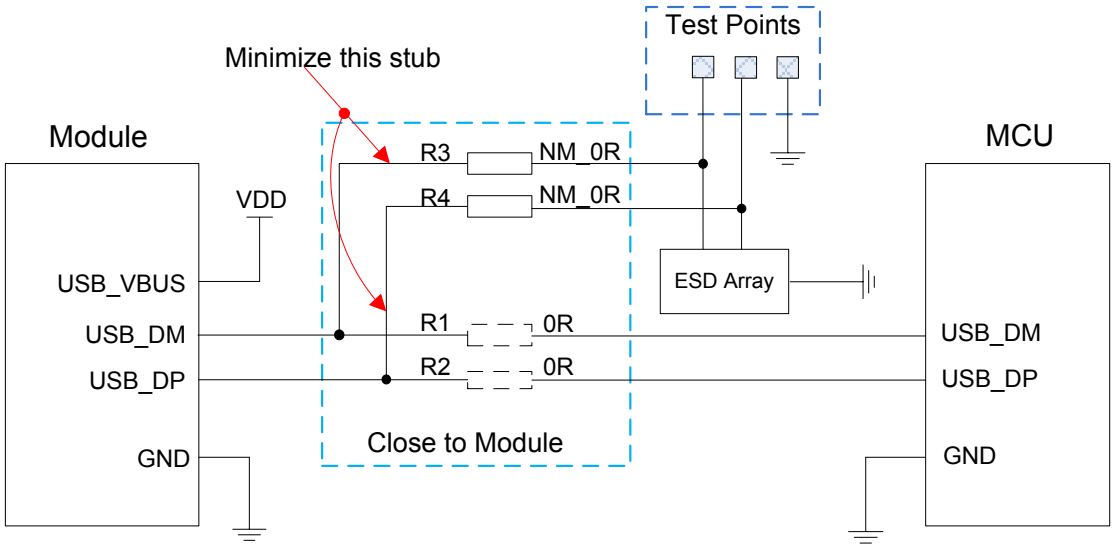

Figure 19: Reference Circuit of USB Application

In order to meet USB data line signal integrity, components R1, R2, R3 and R4 must be placed close to the module, and then these resistors should be placed close to each other. The extra stubs of trace must be as short as possible.

In order to ensure the USB interface design corresponding with the USB 2.0 specification, please comply with the following principles.

- It is important to route the USB signal traces as differential pairs with total grounding. The impedance of USB differential trace is 90ohm.
- Do not route signal traces under crystals, oscillators, magnetic devices and RF signal traces. It is important to route the USB differential traces in inner-layer with ground shielding on not only upper and lower layers but also right and left sides.
- Pay attention to the influence of junction capacitance of ESD component on USB data lines. Typically, the capacitance value should be less than 2pF.
- Keep the ESD components as close as possible to the USB connector.

NOTE

EC25 module can only be used as a slave device.

3.11. UART Interface

The module provides two UART interfaces: main UART interface and debug UART interface. The following shows the different features.

- Main UART interface supports 9600, 19200, 38400, 57600, 115200, 230400, 460800, 921600bps baud rate, and the default is 115200bps. This interface can be used for data transmission and AT communication.
- Debug UART interface supports 115200bps baud rate. It can be used for Linux console and log output.

The following tables show the pin definition.

Table 11: Pin Definition of the Main UART Interface

Pin Name	Pin No.	I/O	Description	Comment
RI	62	DO	Ring indicator	1.8V power domain
DCD	63	DO	Data carrier detection	1.8V power domain
CTS	64	DO	Clear to send	1.8V power domain
RTS	65	DI	Request to send	1.8V power domain
DTR	66	DI	Sleep mode control	1.8V power domain
TXD	67	DO	Transmit data	1.8V power domain
RXD	68	DI	Receive data	1.8V power domain

Table 12: Pin Definition of the Debug UART Interface

Pin Name	Pin No.	I/O	Description	Comment
DBG_TXD	12	DO	Transmit data	1.8V power domain
DBG_RXD	11	DI	Receive data	1.8V power domain

The logic levels are described in the following table.

Table 13: Logic Levels of Digital I/O

Parameter	Min.	Max.	Unit
V_{IL}	-0.3	0.6	V
V_{IH}	1.2	2.0	V
V_{OL}	0	0.45	V
V_{OH}	1.35	1.8	V

The module provides 1.8V UART interface. A level translator should be used if your application is equipped with a 3.3V UART interface. A level translator TXS0108EPWR provided by ***Texas Instrument*** is recommended. The following figure shows the reference design.

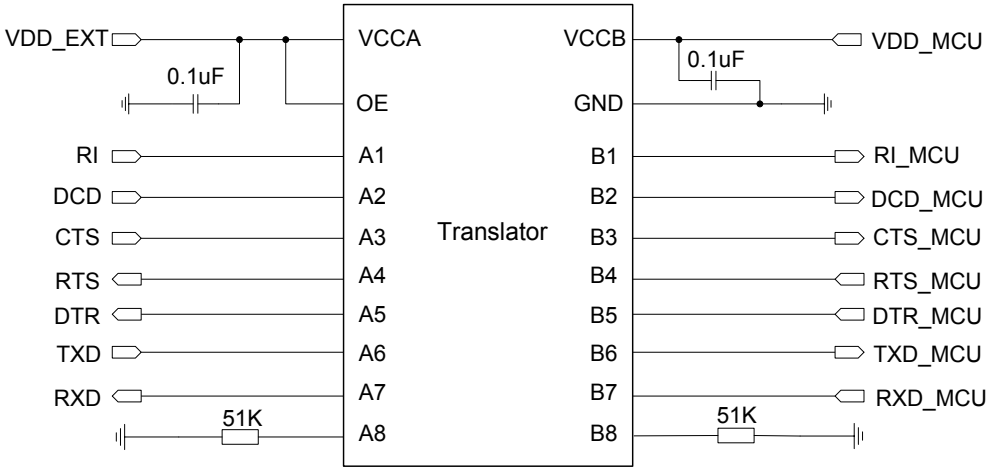

Figure 20: Reference Circuit with Translator Chip

Please visit http://www.ti.com for more information.

Another example with transistor translation circuit is shown as below. The circuit of dotted line can refer to the circuit of solid line. Please pay attention to the direction of connection. Input dotted line of the module should refer to input solid line of the module. Output dotted line of the module should refer to output solid line of the module.

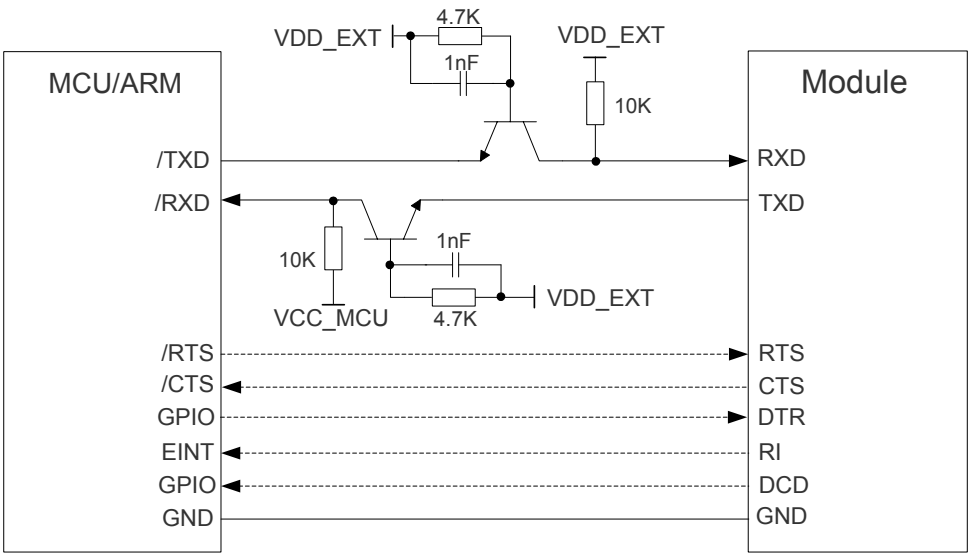

Figure 21: Reference Circuit with Transistor Circuit

NOTE

Transistor circuit solution is not suitable for high baud rates exceeding 460Kbps.

3.12. PCM and I2C Interface

EC25 provides one Pulse Code Modulation (PCM) digital interface for audio design, which supports the following modes:

- Primary mode (short sync, works as both master and slave)
- Auxiliary mode (long sync, works as master only)

In primary mode, the data is sampled on the falling edge of the PCM_CLK and transmitted on the rising edge; the PCM_SYNC falling edge represents the MSB. In this mode, PCM_CLK supports 128, 256, 512, 1024 and 2048kHz for different speech codecs.

In auxiliary mode, the data is sampled on the falling edge of the PCM_CLK and transmitted on the rising edge; while the PCM_SYNC rising edge represents the MSB. In this mode, PCM interface operates with a 128kHz PCM_CLK and an 8kHz, 50% duty cycle PCM_SYNC only.

EC25 supports 8-bit A-law and μ-law, and also 16-bit linear data formats. The following figures show the primary mode's timing relationship with 8kHz PCM_SYNC and 2048kHz PCM_CLK, as well as auxiliary mode's timing relationship with 8kHz PCM_SYNC and 128kHz PCM_CLK.

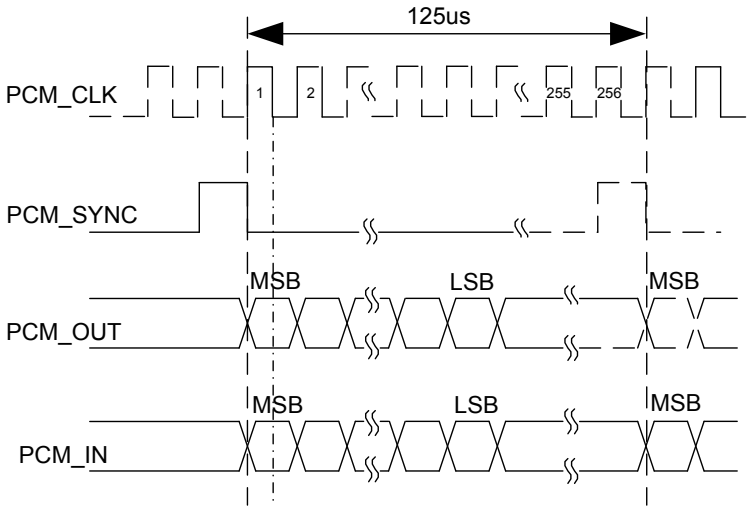

Figure 22: Primary Mode Timing

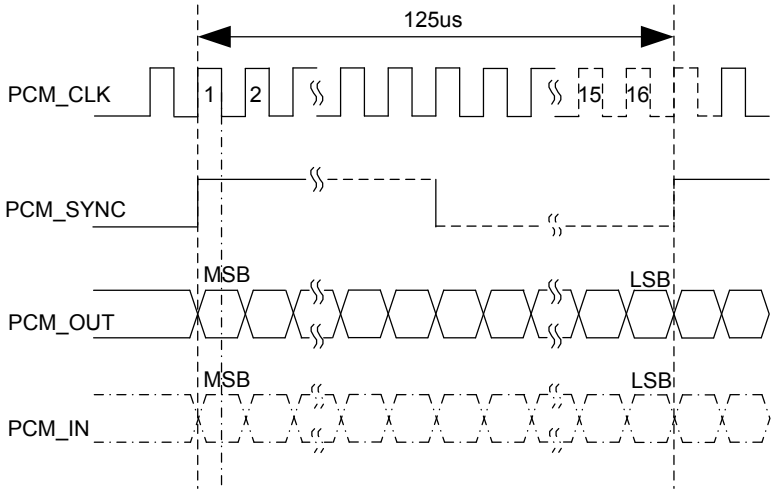

Figure 23: Auxiliary Mode Timing

The following table shows the pin definition of PCM and I2C interface which can be applied on audio codec design.

Table 14: Pin Definition of PCM and I2C Interface

Pin Name	Pin No.	I/O	Description	Comment
PCM_IN	24	DI	PCM data input	1.8V power domain

PCM_OUT	25	DO	PCM data output	1.8V power domain
PCM_SYNC	26	IO	PCM data frame sync signal	1.8V power domain
PCM_CLK	27	IO	PCM data bit clock	1.8V power domain
I2C_SCL	41	OD	I2C serial clock	Require external pull-up to 1.8V
I2C_SDA	42	OD	I2C serial data	Require external pull-up to 1.8V

Clock and mode can be configured by AT command, and the default configuration is master mode using short sync data format with 2048kHz PCM_CLK and 8kHz PCM_SYNC. Refer to ***document [2]*** about the command **AT+QDAI** for details.

The following figure shows the reference design of PCM interface with external codec IC.

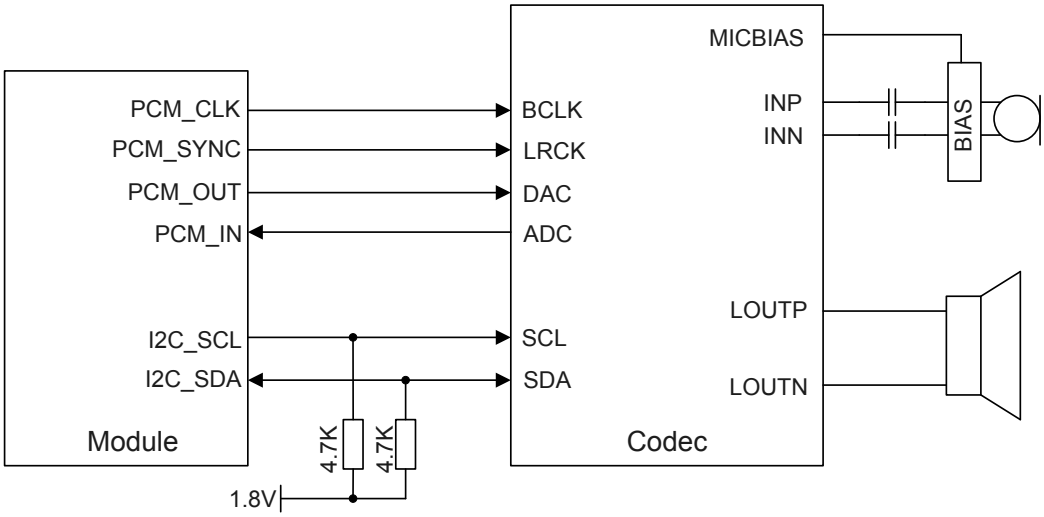

Figure 24: Reference Circuit of PCM Application with Audio Codec

NOTES

1. It is recommended to reserve RC (R=22ohm, C=22pF) circuit on the PCM lines, especially for PCM_CLK.
2. EC25 works as a master device pertaining to I2C interface.

3.13. ADC Function

The module provides two analog-to-digital converters (ADC). Using AT command **AT+QADC=0** can read the voltage value on ADC0 pin. Using AT command **AT+QADC=1** can read the voltage value on ADC1 pin. For more details of these AT commands, please refer to ***document [2]***.

In order to improve the accuracy of ADC, the trace of ADC should be surrounded by ground.

Table 15: Pin Definition of the ADC

Pin Name	Pin No.	Description
ADC0	45	General purpose analog to digital converter
ADC1	44	General purpose analog to digital converter

The following table describes the characteristic of the ADC function.

Table 16: Characteristic of the ADC

Parameter	Min.	Typ.	Max.	Unit
ADC0 Voltage Range	0.3		VBAT_BB	V
ADC1 Voltage Range	0.3		VBAT_BB	V
ADC Resolution		15		bits

3.14. Network Status Indication

The network indication pins can be used to drive a network status indicator LED. The module provides two pins which are NET_MODE and NET_STATUS. The following tables describe pin definition and logic level changes in different network status.

Table 17: Pin Definition of Network Indicator

Pin Name	Pin No.	I/O	Description	Comment
NET_MODE	5	DO	Indicate the module network registration	1.8V power domain

			mode.	
NET_STATUS	6	DO	Indicate the module network activity status.	1.8V power domain

Table 18: Working State of the Network Indicator

Pin Name	Status	Description
NET_MODE	Always High	Registered in LTE network
	Always Low	Others
NET_STATUS	Flicker slowly (200ms High/1800ms Low)	Network searching
	Flicker slowly (1800ms High/200ms Low)	Idle
	Flicker quickly (125ms High/125ms Low)	Data transfer is ongoing
	Always High	Voice calling

A reference circuit is shown in the following figure.

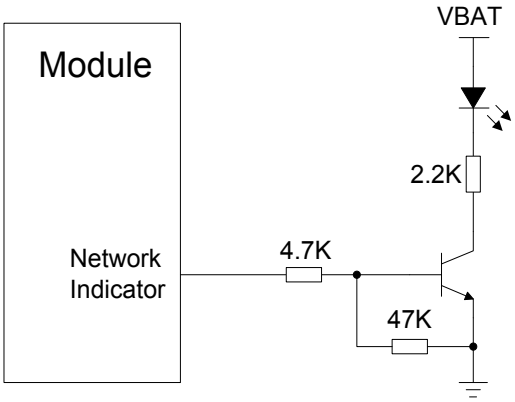

Figure 25: Reference Circuit of the Network Indicator

3.15. STATUS

The STATUS pin is an open drain output for indicating the module's operation status. You can connect it to a GPIO of DTE with pulled up, or as LED indication circuit as below. When the module is turned on normally, the STATUS will present the low state. Otherwise, the STATUS will present high-impedance state.

Table 19: Pin Definition of STATUS

Pin Name	Pin No.	I/O	Description	Comment
STATUS	61	OD	Indicate the module operation status	Require external pull-up

The following figure shows different design circuit of STATUS, you can choose either one according to your application demands.

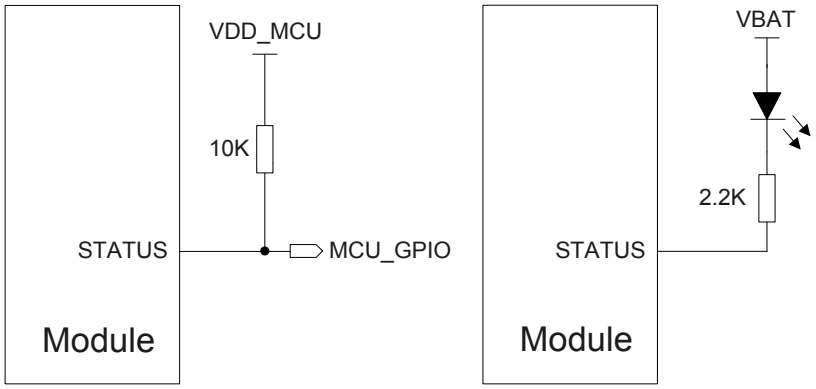

Figure 26: Reference Circuit of the STATUS

3.16. Behavior of the RI

You can use command **AT+QCFG="risignaltype","physical"** to configure RI behavior.

No matter which port URC is presented on, URC will trigger the behavior on RI pin.

NOTE

URC can be output from UART port, USB AT port and USB modem port by command **AT+QURCCFG**. The default port is USB AT port.

In addition, RI behavior can be configured flexibly. The default behavior of the RI is shown as below.

Table 20: Behavior of the RI

State	Response
Idle	RI keeps high level
URC	RI outputs 120ms low pulse when new URC returns

The RI behavior can be changed by command **AT+QCFG="urc/ri/ring"**. Refer to ***document [2]*** for details.

4 GNSS Receiver

4.1. General Description

EC25 includes a fully integrated global navigation satellite system solution that supports Gen8C-Lite of Qualcomm (GPS, GLONASS, BeiDou, Galileo and QZSS).

EC25 supports standard NMEA-0183 protocol, and outputs NMEA sentences with 1Hz via USB interface by default.

By default, EC25 GNSS engine is switched off. It has to be switched on with AT command. For more details about GNSS engine technology and configurations, please refer to ***document [3]***.

4.2. GNSS Performance

The following table shows EC25 GNSS performance.

Table 21: GNSS Performance

Parameter	Description	Conditions	Typ.	Unit
Sensitivity (GNSS)	Cold start	Autonomous	TBD	dBm
	Reacquisition	Autonomous	TBD	dBm
	Tracking	Autonomous	TBD	dBm
TTFF (GNSS)	Cold start @open sky	Autonomous	TBD	s
		XTRA enabled	TBD	s
	Warm start @open sky	Autonomous	TBD	s
		XTRA enabled	TBD	s

	Hot start @open sky	Autonomous	TBD	s
		XTRA enabled	TBD	s
Accuracy (GNSS)	CEP-50	Autonomous @open sky	TBD	m

NOTES

1. Tracking sensitivity: the lowest GPS signal value at the antenna port for which the module can keep on positioning for 3 minutes.
2. Reacquisition sensitivity: the lowest GPS signal value at the antenna port for which the module can fix position again within 3 minutes after loss of lock.
3. Cold start sensitivity: the lowest GPS signal value at the antenna port for which the module fixes position within 3 minutes after executing cold start command.

4.3. Layout Guideline

The following layout guideline should be taken into account in your design.

- Maximize the distance between the GNSS antenna, the main antenna and the Rx-diversity antenna.
- Digital circuits such as USIM card, USB interface, Camera module, Display connector and SD card should be kept away from the antenna.
- Use ground vias around the GNSS trace and sensitive analog signal traces to provide coplanar isolation and protection.
- Keep 50ohm characteristic impedance for the ANT_GNSS trace.

Refer to ***Chapter 5*** for GNSS reference design and antenna consideration.

5 Antenna Interface

EC25 antenna interface includes a main antenna, an Rx-diversity antenna which is used to resist the fall of signals caused by high speed movement and multipath effect, and a GNSS antenna. The antenna interface has an impedance of 50ohm.

5.1. Main/Rx-diversity Antenna Interface

5.1.1. Pin Definition

The main antenna and Rx-diversity antenna pins definition are shown below.

Table 22: Pin Definition of the RF Antenna

Pin Name	Pin No.	I/O	Description	Comment
ANT_MAIN	49	IO	Main antenna	50ohm impedance
ANT_DIV	35	AI	Receive diversity antenna	50ohm impedance

5.1.2. Operating Frequency

Table 23: The Module Operating Frequencies

3GPP Band	Transmit	Receive	Unit
B4	1710 ~ 1755	2110 ~ 2155	MHz
B13	777 ~ 787	746 ~ 756	MHz

5.1.3. Reference Design

The reference design of ANT_MAIN and ANT_DIV antenna is shown as below. It should reserve a π-type matching circuit for better RF performance. The capacitors are not mounted by default.

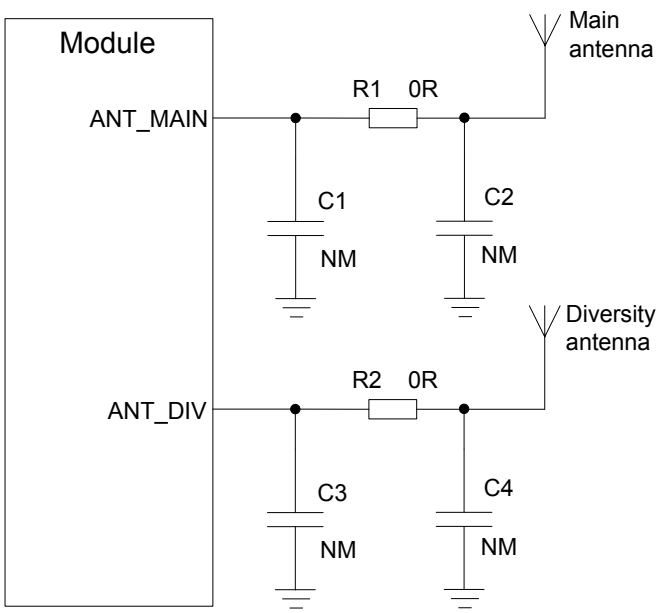

Figure 27: Reference Circuit of Antenna Interface

NOTES

1. Keep a proper distance between the main antenna and the Rx-diversity antenna to improve the receiving sensitivity.
2. ANT_DIV function is enabled by default. Use the AT command **AT+QCFG="diversity",0** can disable receive diversity.

5.2. GNSS Antenna Interface

The following tables show the GNSS antenna pin definition and frequency specification.

Table 24: Pin Definition of GNSS Antenna

Pin Name	Pin No.	I/O	Description	Comment
ANT_GNSS	47	AI	GNSS antenna	50ohm impedance

Table 25: GNSS Frequency

Type	Frequency	Unit
GPS/Galileo/QZSS	1575.42 ± 1.023	MHz
GLONASS	1597.5 ~ 1605.8	MHz
BeiDou	1561.098 ± 2.046	MHz

The reference design of GNSS antenna is shown as below.

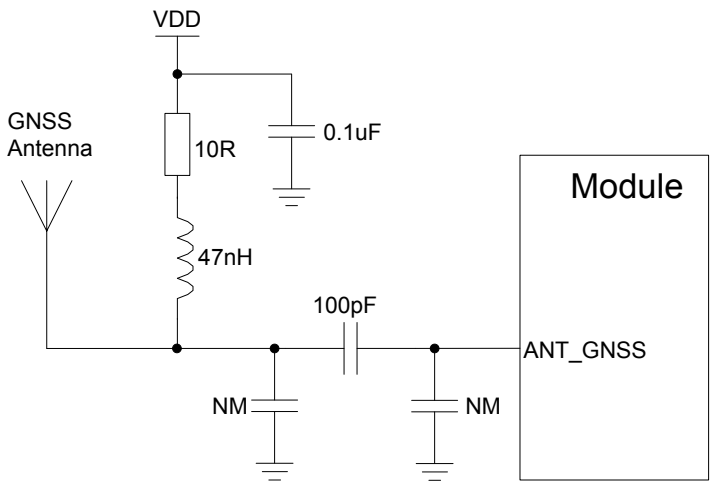

Figure 28: Reference Circuit of GNSS Antenna

NOTES

1. You can choose an external LDO to supply power according to the active antenna.
2. If you design the module with passive antenna, the VDD circuit is not needed.

5.3. Antenna Installation

5.3.1. Antenna Requirement

The following table shows the requirements on main antenna, Rx-diversity antenna and GNSS antenna.

Table 26: Antenna Requirements

Type	Requirements

GNSS	Frequency range: 1561 - 1615MHz Polarization: RHCP or linear VSWR: < 2 (Typ.) Passive antenna gain: > 0dBi Active antenna noise figure: < 1.5dB Active antenna gain: > -2dBi Active antenna embedded LNA gain: 20dB (Typ.) Active antenna total gain: > 18dBi (Typ.)
GSM/LTE	VSWR: ≤ 2 Gain (dBi): 1 Max Input Power (W): 50 Input Impedance (ohm): 50 Polarization Type: Vertical Cable Insertion Loss: < 1dB (LTE B13) Cable Insertion Loss: < 1.5dB (LTE B4)

5.3.2. Install the Antenna with RF Connector

The following figure is the antenna installation with RF connector provided by HIROSE. The recommended RF connector is UF.L-R-SMT.

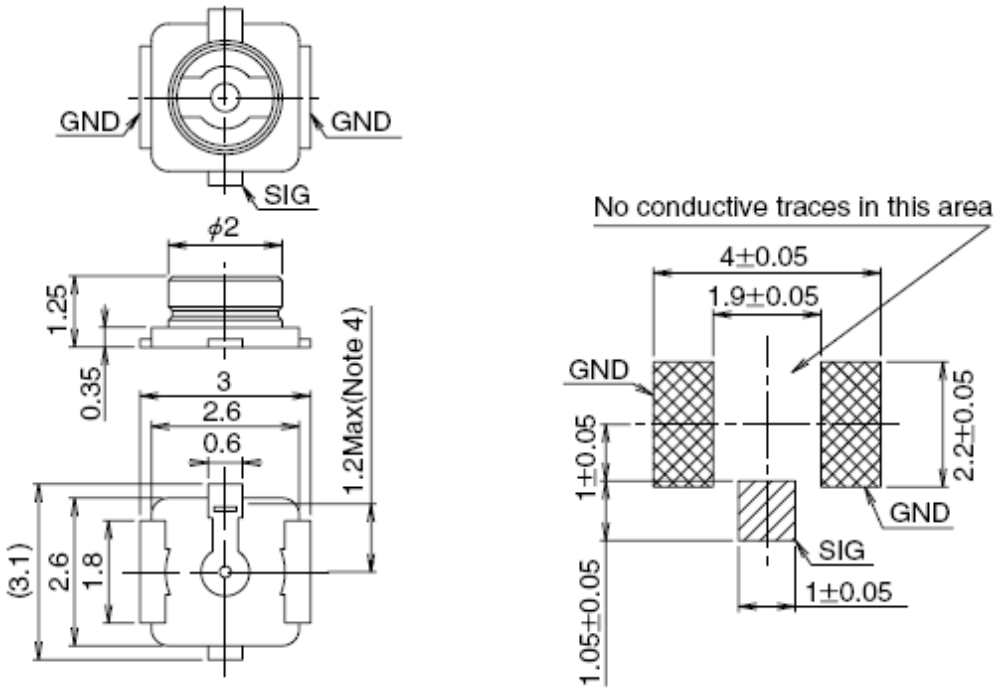

Figure 29: Dimensions of the UF.L-R-SMT Connector (Unit: mm)

You can use U.FL-LP serial connector listed in the following figure to match the UF.L-R-SMT.

Part No.	U.FL-LP-040	U.FL-LP-066	U.FL-LP(V)-040	U.FL-LP-062	U.FL-LP-088
	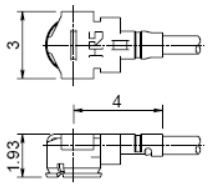	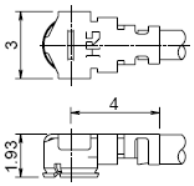	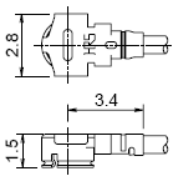	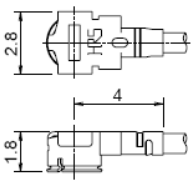	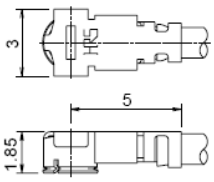
Mated Height	2.5mm Max. (2.4mm Nom.)	2.5mm Max. (2.4mm Nom.)	2.0mm Max. (1.9mm Nom.)	2.4mm Max. (2.3mm Nom.)	2.4mm Max. (2.3mm Nom.)
Applicable cable	Dia. 0.81mm Coaxial cable	Dia. 1.13mm and Dia. 1.32mm Coaxial cable	Dia. 0.81mm Coaxial cable	Dia. 1mm Coaxial cable	Dia. 1.37mm Coaxial cable
Weight (mg)	53.7	59.1	34.8	45.5	71.7
RoHS	YES				

Figure 30: Mechanicals of UF.L-LP Connectors

The following figure describes the space factor of mated connector.

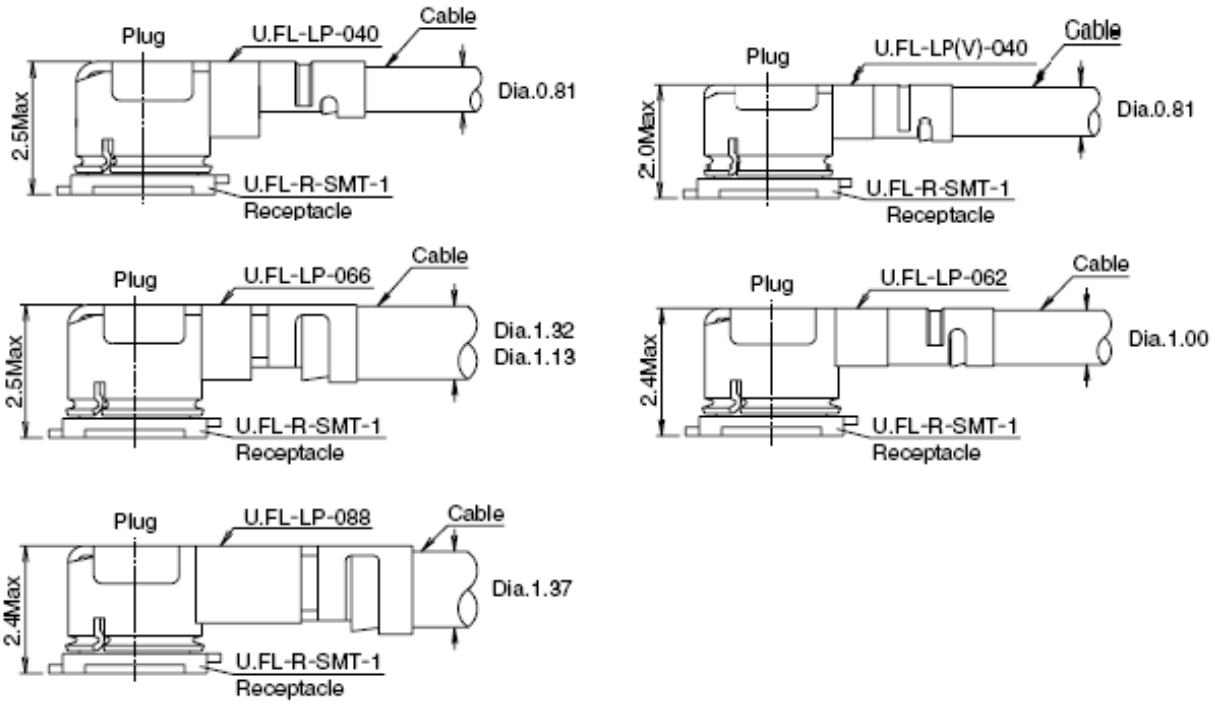

Figure 31: Space Factor of Mated Connector (Unit: mm)

For more details, please visit http://www.hirose.com.

6 Electrical, Reliability and Radio Characteristics

6.1. Absolute Maximum Ratings

Absolute maximum ratings for power supply and voltage on digital and analog pins of the module are listed in the following table.

Table 27: Absolute Maximum Ratings

Parameter	Min.	Max.	Unit
VBAT_RF/VBAT_BB	-0.3	4.7	V
USB_VBUS	-0.3	5.5	V
Peak Current of VBAT_BB	0	0.8	A
Peak Current of VBAT_RF	0	1.8	A
Voltage at Digital Pins	-0.3	2.3	V
Voltage at ADC0	0	VBAT_BB	V
Voltage at ADC1	0	VBAT_BB	V

6.2. Power Supply Ratings

Table 28: The Module Power Supply Ratings

Parameter	Description	Conditions	Min.	Typ.	Max.	Unit
VBAT	VBAT_BB and	Voltage must stay within the	3.3	3.8	4.3	V

Parameter	Description	Conditions	Min.	Typ.	Max.	Unit
	VBAT_RF	min/max values, including voltage drop, ripple and spikes.				
	Voltage drop during transmitting burst	Maximum power control level on GSM900.			400	mV
I_{VBAT}	Peak supply current (during transmission slot)	Maximum power control level on GSM900.		1.8	2.0	A
USB_VBUS	USB detection		3.0	5.0	5.25	V

6.3. Operating Temperature

The operating temperature is listed in the following table.

Table 29: Operating Temperature

Parameter	Min.	Typ.	Max.	Unit
Normal Temperature	-35	25	75	℃
Restricted Operation	-40 ~ -35		75 ~ 85	℃
Storage Temperature	-45		90	℃

6.4. Current Consumption

This information will be added in future version of this document.

6.5. RF Output Power

The following table shows the RF output power of EC25 module.

Table 30: Conducted RF Output Power

Frequency	Max.	Min.
LTE FDD B4/B13	23dBm±2dB	<-44dBm

6.6. RF Receiving Sensitivity

This information will be added in future version of this document.

6.7. Electrostatic Discharge

The module is not protected against electrostatics discharge (ESD) in general. Consequently, it is subject to ESD handling precautions that typically apply to ESD sensitive components. Proper ESD handling and packaging procedures must be applied throughout the processing, handling and operation of any application that incorporates the module.

The following table shows the module electrostatics discharge characteristics.

Table 31: Electrostatics Discharge Characteristics

Tested Points	Contact Discharge	Air Discharge	Unit
VBAT, GND	±5	±10	kV
All Antenna Interfaces	±4	±8	kV
Other Interfaces	±0.5	±1	kV

7 Mechanical Dimensions

This chapter describes the mechanical dimensions of the module. All dimensions are measured in mm.

7.1. Mechanical Dimensions of the Module

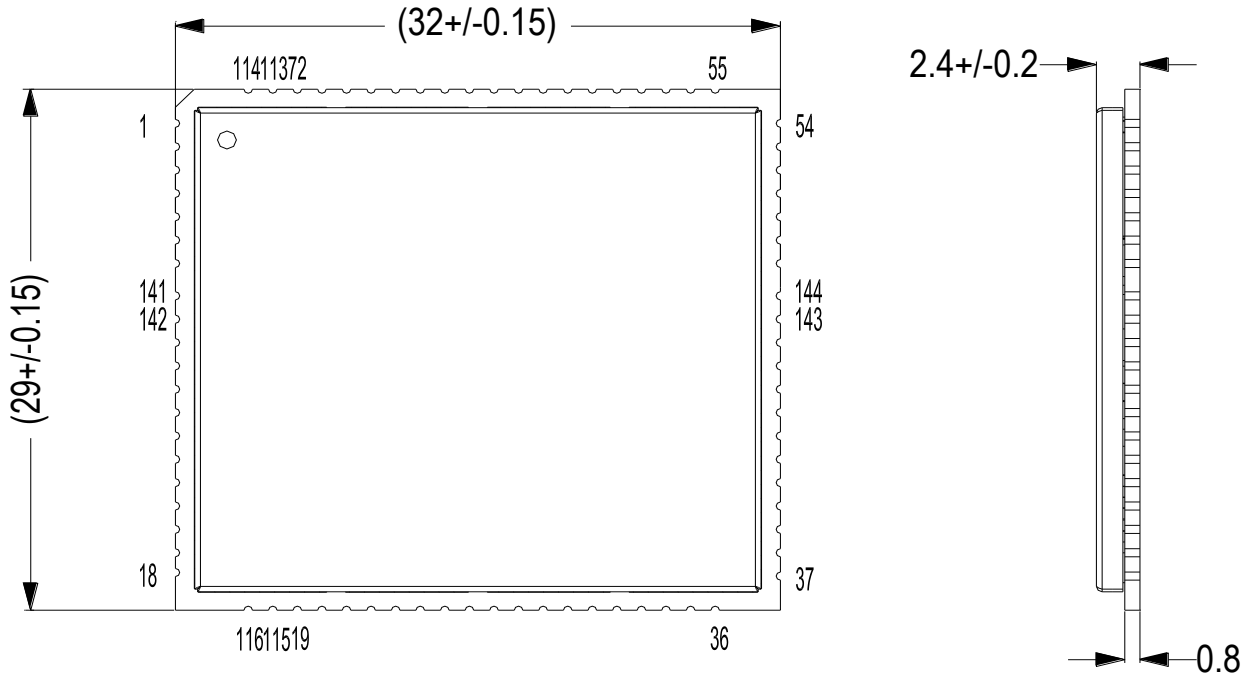

Figure 32: Module Top and Side Dimensions

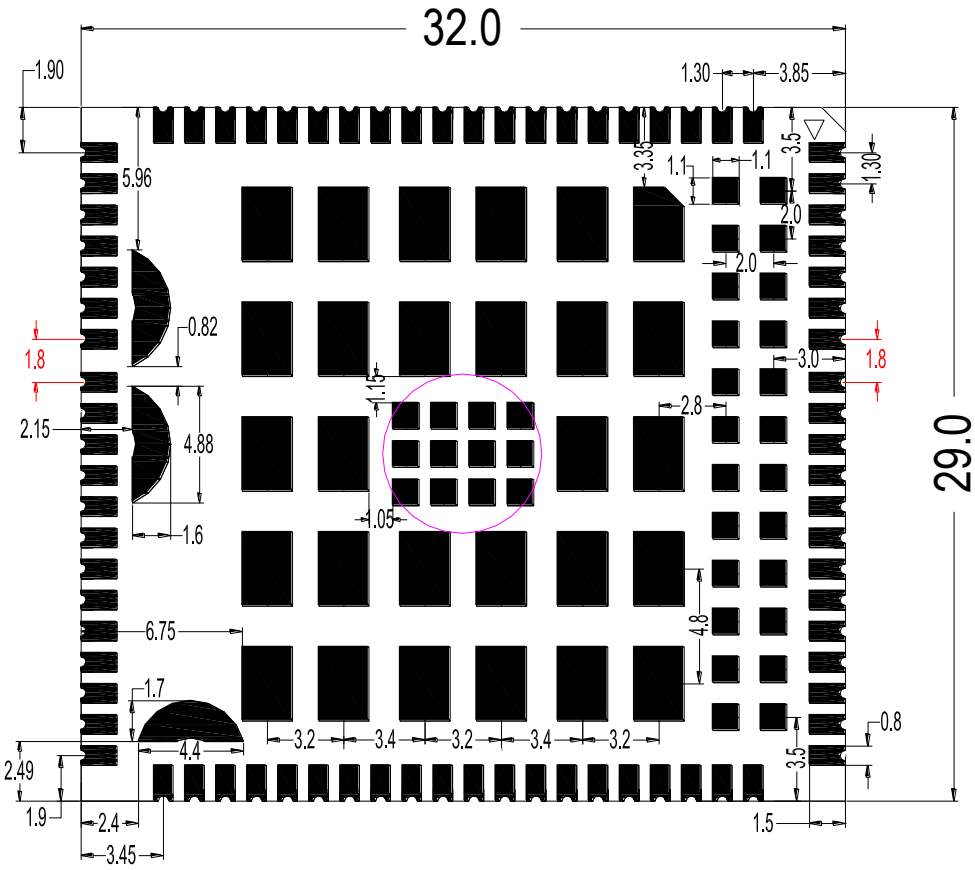

Figure 33: Module Bottom Dimensions (Bottom View)

7.2. Footprint of Recommendation

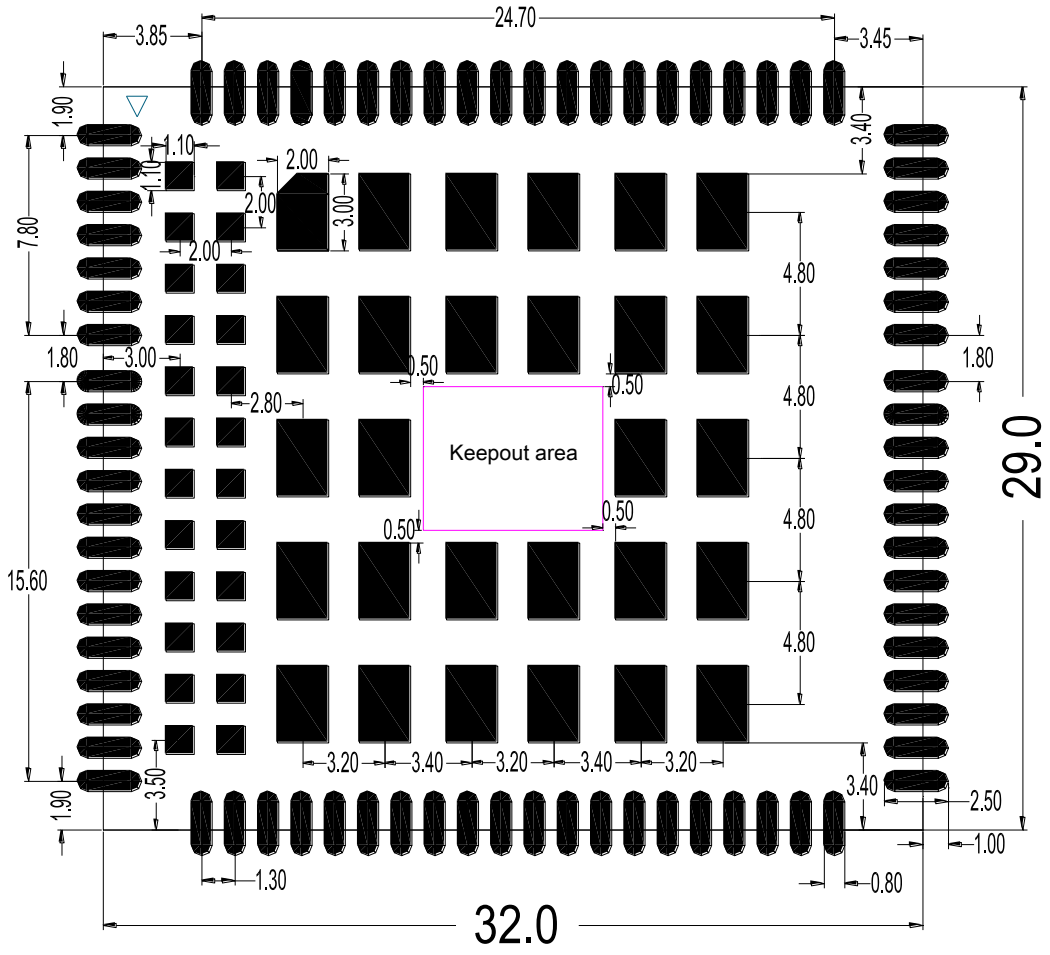

Figure 34: Recommended Footprint (Top View)

NOTES

1. Pads 73~84 should not be designed.
2. In order to maintain the module, keep about 3mm between the module and other components in the host PCB.

7.3. Top View of the Module

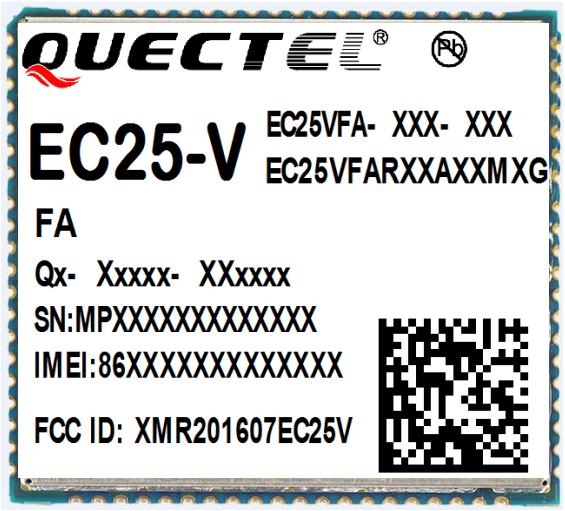

Figure 35: Top View of the Module

7.4. Bottom View of the Module

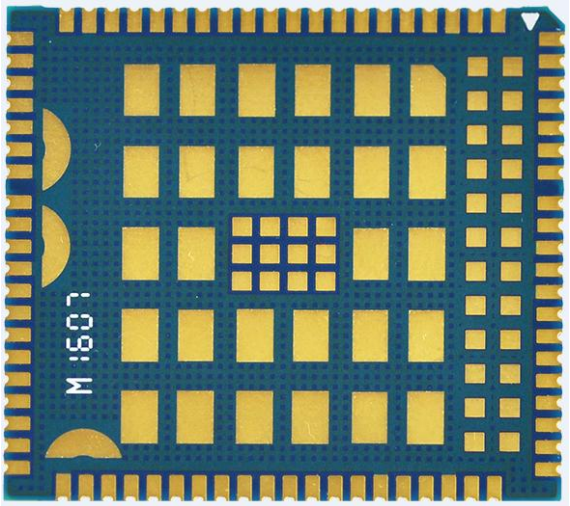

Figure 36: Bottom View of the Module

8 Storage and Manufacturing

8.1. Storage

EC25 is stored in a vacuum-sealed bag. The restrictions of storage condition are shown as below.

1. Shelf life in sealed bag is 12 months at < 40ºC/90%RH.

2. After this bag is opened, devices that will be subjected to reflow soldering or other high temperature processes must be:
   - Mounted within 72 hours at factory conditions of ≤ 30ºC/60%RH.
   - Stored at <10% RH.

3. Devices require bake before mounting, if:
   - Humidity indicator card is >10% when ambient temperature is 23ºC±5ºC.
   - Mounted for more than 72 hours at factory conditions of ≤ 30ºC/60% RH.

4. If baking is required, devices may be baked for 48 hours at 125ºC±5ºC.

NOTE

As plastic container cannot be subjected to high temperature, the module needs to be taken out from the container for high temperature (125ºC) baking. If shorter baking time is desired, please refer to IPC/JEDECJ-STD-033 for baking procedure.

8.2. Manufacturing and Welding

The squeegee should push the paste on the surface of stencil, so as to make the paste fill the stencil openings and penetrate to the PCB. The force on the squeegee should be adjusted so as to produce a clean stencil surface on a single pass. To ensure the module soldering quality, the thickness of stencil at the hole of the module pads should be 0.18mm. For details, please refer to ***document [4]***.

It is suggested that the peak reflow temperature is 235 ~ 245ºC (for SnAg3.0Cu0.5 alloy). The absolute max reflow temperature is 260ºC. To avoid damage to the module when it is repeatedly heated, it is

suggested that the module should be mounted after the first panel has been reflowed. The following picture is the actual diagram which we have operated.

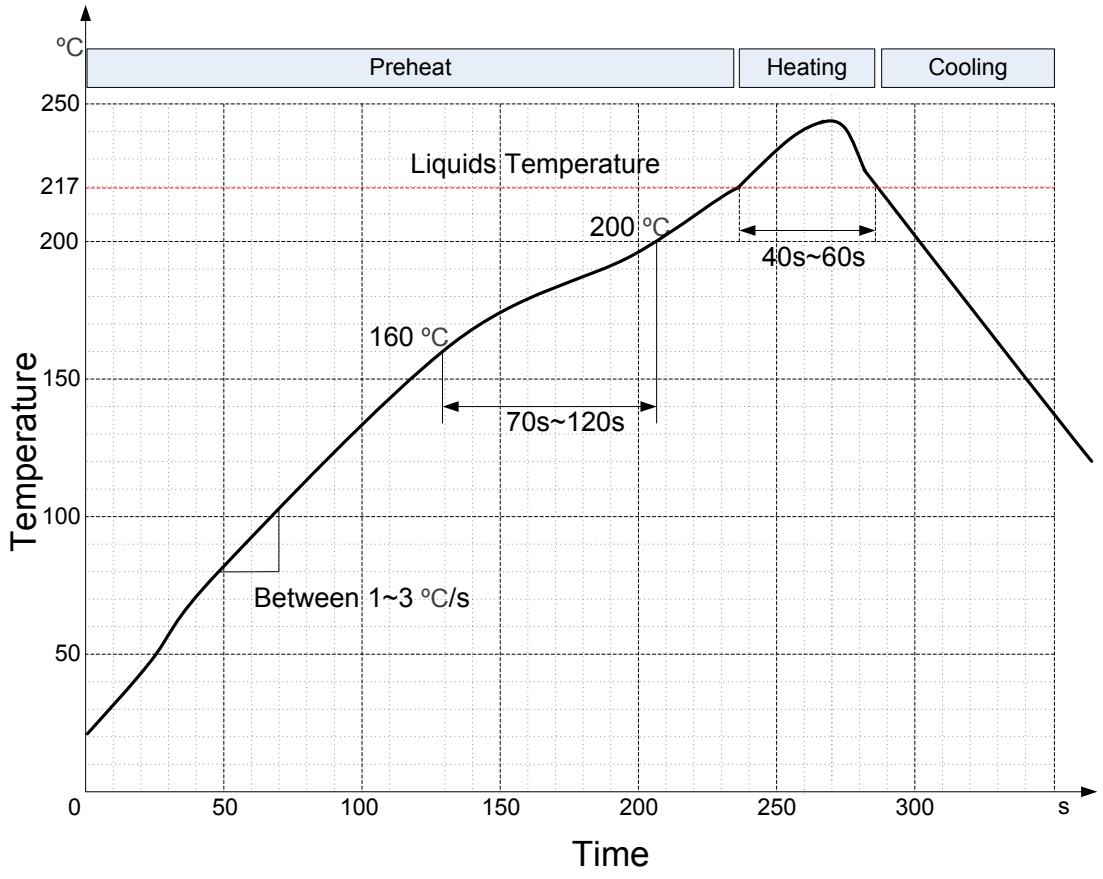

Figure 37: Liquids Temperature

8.3. Packaging

EC25 is packaged in tap and reel carriers. One reel is 11.53m length and contains 250pcs modules. The figure below shows the package details, measured in mm.

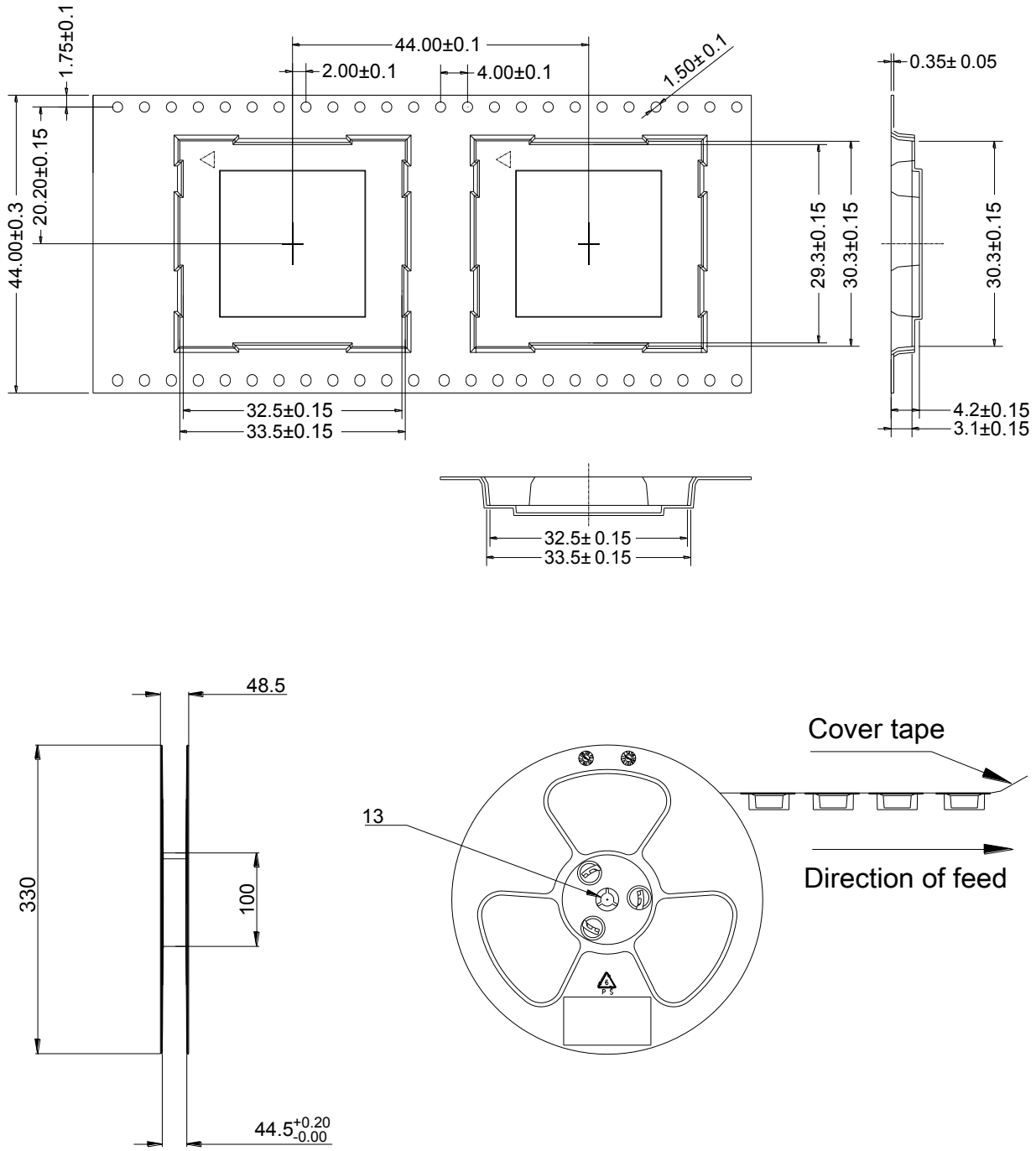

Figure 38: Carrier Tape

9 Appendix A Reference

Table 32: Related Documents

SN	Document Name	Remark
[1]	Quectel_EC25_Power_Management_Application_Note	EC25 Power Management Application Note
[2]	Quectel_EC25_AT_Commands_Manual	EC25 AT Commands Manual
[3]	Quectel_EC25_GNSS_AT_Commands_Manual	EC25 GNSS AT Commands Manual
[4]	Quectel_Module_Secondary_SMT_User_Guide	Module Secondary SMT User Guide

Table 33: Terms and Abbreviations

Abbreviation	Description
AMR	Adaptive Multi-rate
bps	Bits Per Second
CHAP	Challenge Handshake Authentication Protocol
CS	Coding Scheme
CSD	Circuit Switched Data
CTS	Clear To Send
DC-HSPA+	Dual-carrier High Speed Packet Access
DFOTA	Delta Firmware Upgrade Over The Air
DL	Downlink
DTR	Data Terminal Ready
DTX	Discontinuous Transmission

EFR	Enhanced Full Rate
ESD	Electrostatic Discharge
FDD	Frequency Division Duplex
FR	Full Rate
GLONASS	GLObalnaya NAvigatsionnaya Sputnikovaya Sistema, the Russian Global Navigation Satellite System
GMSK	Gaussian Minimum Shift Keying
GNSS	Global Navigation Satellite System
GPS	Global Positioning System
GSM	Global System for Mobile Communications
HR	Half Rate
HSPA	High Speed Packet Access
HSDPA	High Speed Downlink Packet Access
HSUPA	High Speed Uplink Packet Access
I/O	Input/Output
Inorm	Normal Current
LED	Light Emitting Diode
LNA	Low Noise Amplifier
LTE	Long Term Evolution
MO	Mobile Originated
MS	Mobile Station (GSM engine)
MT	Mobile Terminated
PAP	Password Authentication Protocol
PCB	Printed Circuit Board
PDU	Protocol Data Unit

PPP	Point-to-Point Protocol
QAM	Quadrature Amplitude Modulation
QPSK	Quadrature Phase Shift Keying
RF	Radio Frequency
RHCP	Right Hand Circularly Polarized
Rx	Receive
SIM	Subscriber Identification Module
SMS	Short Message Service
TDD	Time Division Duplexing
TDMA	Time Division Multiple Access
TD-SCDMA	Time Division-Synchronous Code Division Multiple Access
TX	Transmitting Direction
UL	Uplink
UMTS	Universal Mobile Telecommunications System
URC	Unsolicited Result Code
USIM	Universal Subscriber Identity Module
Vmax	Maximum Voltage Value
Vnorm	Normal Voltage Value
Vmin	Minimum Voltage Value
V_{IH}max	Maximum Input High Level Voltage Value
V_{IH}min	Minimum Input High Level Voltage Value
V_{IL}max	Maximum Input Low Level Voltage Value
V_{IL}min	Minimum Input Low Level Voltage Value
$V_I$max	Absolute Maximum Input Voltage Value
$V_I$min	Absolute Minimum Input Voltage Value

V_{OH}max	Maximum Output High Level Voltage Value
V_{OH}min	Minimum Output High Level Voltage Value
V_{OL}max	Maximum Output Low Level Voltage Value
V_{OL}min	Minimum Output Low Level Voltage Value
VSWR	Voltage Standing Wave Ratio

Directives and Standards

The EC25-V module is designed to comply with the FCC statements. FCC ID: XMR201607EC25V, The Host system using EC25-V, should have label indicated FCC ID: XMR201607EC25V.

FCC Radiation Exposure Statement

This equipment complies with FCC radiation exposure limits set forth for an uncontrolled environment .This equipment should be installed and operated with minimum distance 20 cm between the radiator & your body.

If using a permanently affixed label, the modular transmitter must be labeled with its own FCC identification number, and, if the FCC identification number is not visible when the module is installed inside another device, then the outside of the device into which the module is installed must also display a label referring to the enclosed module. This exterior label can use wording such as the following:
"Contains Transmitter Module FCC ID: XMR201607EC25V" or "Contains FCC ID: XMR201607EC25V". Any similar wording that expresses the same meaning may be used. The Grantee may either provide such a label, an example of which must be included in the application for equipment authorization, or, must provide adequate instructions along with the module which explain this requirement. In the latter case, a copy of these instructions must be included in the application for equipment authorization.

This device is to be used in mobile or fixed applications only. Antenna gain including cable loss must not exceed 10.71 dBi of frequency band 777-787 MHz, 6.5 dBi of frequency band 1710-1755 MHz, for the purpose of satisfying the requirements of 2.1043 and 2.1091.
The antenna(s) used for this transmitter must be installed to provide a separation distance of at least 20 cm from all persons and must not be co-located or operated in conjunction with any antenna or transmitter not described under this FCC ID. The final product operating with this transmitter must include operating instructions and antenna installation instructions, for end-users and installers to satisfy RF exposure compliance requirements.