MC20 Hardware Design

GSM/GPRS/GNSS Module Series

Rev. MC20_Hardware_Design_V1.0

Date: 2016-07-12

www.quectel.com

Our aim is to provide customers with timely and comprehensive service. For any assistance, please contact our company headquarters:

Quectel Wireless Solutions Co., Ltd.
Office 501, Building 13, No.99, Tianzhou Road, Shanghai, China, 200233
Tel: +86 21 5108 6236
Email: info@quectel.com

Or our local office. For more information, please visit:
http://www.quectel.com/support/salesupport.aspx

For technical support, or to report documentation errors, please visit:
http://www.quectel.com/support/techsupport.aspx
Or email to: Support@quectel.com

GENERAL NOTES

QUECTEL OFFERS THE INFORMATION AS A SERVICE TO ITS CUSTOMERS. THE INFORMATION PROVIDED IS BASED UPON CUSTOMERS' REQUIREMENTS. QUECTEL MAKES EVERY EFFORT TO ENSURE THE QUALITY OF THE INFORMATION IT MAKES AVAILABLE. QUECTEL DOES NOT MAKE ANY WARRANTY AS TO THE INFORMATION CONTAINED HEREIN, AND DOES NOT ACCEPT ANY LIABILITY FOR ANY INJURY, LOSS OR DAMAGE OF ANY KIND INCURRED BY USE OF OR RELIANCE UPON THE INFORMATION. ALL INFORMATION SUPPLIED HEREIN IS SUBJECT TO CHANGE WITHOUT PRIOR NOTICE.

COPYRIGHT

THE INFORMATION CONTAINED HERE IS PROPRIETARY TECHNICAL INFORMATION OF QUECTEL CO., LTD. TRANSMITTING, REPRODUCTION, DISSEMINATION AND EDITING OF THIS DOCUMENT AS WELL AS UTILIZATION OF THE CONTENT ARE FORBIDDEN WITHOUT PERMISSION. OFFENDERS WILL BE HELD LIABLE FOR PAYMENT OF DAMAGES. ALL RIGHTS ARE RESERVED IN THE EVENT OF A PATENT GRANT OR REGISTRATION OF A UTILITY MODEL OR DESIGN.

Copyright © Quectel Wireless Solutions Co., Ltd. 2016. All rights reserved.

About the Document

History

Revision	Date	Author	Description
1.0	2016-07-12	Tiger CHENG	Initial

Contents

About the Document **2**

Contents **3**

Table Index **6**

Figure Index **8**

1 Introduction **10**
1.1. Safety Information 10

2 Product Concept **12**
2.1. General Description 12
2.2. Directives and Standards 13
2.2.1. 2.2.1. FCC Statement 13
2.2.2. FCC Radiation Exposure Statement 13
2.3. Key Features 13
2.4. Functional Diagram 17
2.5. Evaluation Board 18

3 Application Functions **19**
3.1. Pin of Module 20
3.1.1. Pin Assignment 20
3.1.2. Pin Description 21
3.2. Application Modes Introduction 25
3.3. Power Supply 27
3.3.1. Power Features 27
3.3.2. Decrease Supply Voltage Drop 28
3.3.2.1. Decrease Supply Voltage Drop for GSM Part 28
3.3.2.2. Decrease Supply Voltage Drop for GNSS Part 29
3.3.3. Reference Design for Power Supply 30
3.3.3.1. Reference Design for Power Supply of GSM Part 30
3.3.3.2. Reference Design for Power Supply of GNSS Part 31
3.3.4. Monitor Power Supply 31
3.3.5. Backup Domain of GNSS 31
3.4. Operating Modes 32
3.4.1. Operating Modes of GSM Part 32
3.4.1.1. Minimum Functionality Mode 33
3.4.1.2. SLEEP Mode 34
3.4.1.3. Wake up GSM Part from SLEEP Mode 34
3.4.2. Operating Modes of GNSS Part 34
3.4.2.1. Full on Mode 34
3.4.2.2. Standby Mode 36
3.4.2.3. Backup Mode 36

3.4.3. Summary of GSM and GNSS Parts' State in All-in-one Solution 37
3.4.4. Summary of GSM and GNSS Parts' State in Stand-alone Solution 37
3.5. Power on and down 38
3.5.1. Power on 38
3.5.2. Power down 40
3.5.2.1. Power down Module Using the PWRKEY Pin 40
3.5.2.2. Power down Module Using AT Command 41
3.5.2.3. Power down GNSS Part Alone Using AT Command 42
3.5.2.4. Under-voltage Automatic Shutdown 42
3.6. Serial Interfaces 43
3.6.1. UART Port 45
3.6.1.1. Features of UART Port 45
3.6.1.2. The Connection of UART 46
3.6.1.3. Firmware Upgrade 48
3.6.2. Debug Port 49
3.6.3. Auxiliary UART Port and GNSS UART Port 49
3.6.3.1. Connection in All-in-one Solution 49
3.6.3.2. Connection in Stand-alone Solution 50
3.6.4. UART Application 51
3.7. Audio Interfaces 52
3.7.1. Decrease TDD Noise and Other Noises 54
3.7.2. Microphone Interfaces Design 54
3.7.3. Receiver and Speaker Interface Design 55
3.7.4. Earphone Interface Design 56
3.7.5. Loud Speaker Interface Design 56
3.7.6. Audio Characteristics 57
3.8. SIM Card Interface 57
3.9. ADC 61
3.10. Behaviors of the RI 61
3.11. Network Status Indication 63
3.12. EASY Autonomous AGPS Technology 64
3.13. EPO Offline AGPS Technology 64
3.14. Multi-tone AIC 65

4 Antenna Interface 66
4.1. GSM Antenna Interface 66
4.1.1. Reference Design 66
4.1.2. RF Output Power 67
4.1.3. RF Receiving Sensitivity 68
4.1.4. Operating Frequencies 68
4.1.5. RF Cable Soldering 68
4.2. GNSS Antenna Interface 69
4.2.1. Antenna Specifications 69
4.2.2. Active Antenna 70
4.2.3. Passive Antenna 71

4.3. Bluetooth Antenna Interface 71

5 Electrical, Reliability and Radio Characteristics 74
5.1. Absolute Maximum Ratings 74
5.2. Operating Temperature 74
5.3. Power Supply Ratings 75
5.4. Current Consumption 77
5.5. Electrostatic Discharge 79

6 Mechanical Dimensions 81
6.1. Mechanical Dimensions of Module 81
6.2. Recommended Footprint 83
6.3. Top and Bottom View of the Module 84

7 Storage and Manufacturing 85
7.1. Storage 85
7.2. Soldering 85
7.3. Packaging 86
7.3.1. Tape and Reel Packaging 87

8 Appendix A References 88

9 Appendix B GPRS Coding Schemes 93

10 Appendix C GPRS Multi-slot Classes 95

Table Index

TABLE 1: KEY FEATURES (GMS/GPRS PART OF MC20) 13
TABLE 2: CODING SCHEMES AND MAXIMUM NET DATA RATES OVER AIR INTERFACE 15
TABLE 3: KEY FEATURES (GNSS PART OF MC20) 16
TABLE 4: PROTOCOLS SUPPORTED BY THE MODULE 17
TABLE 5: I/O PARAMETERS DEFINITION 21
TABLE 6: PIN DESCRIPTION 21
TABLE 7: MULTIPLEXED FUNCTIONS 25
TABLE 8: COMPARISON BETWEEN ALL-IN-ONE AND STAND-ALONE SOLUTION 27
TABLE 9: OPERATING MODES OVERVIEW OF GSM PART 32
TABLE 10: DEFAULT CONFIGURATION OF FULL ON MODE (GNSS PART) 35
TABLE 11: COMBINATION STATES OF GSM AND GNSS PARTS IN ALL-IN-ONE SOLUTION 37
TABLE 12: COMBINATION STATES OF GSM AND GNSS PARTS IN STAND-ALONE SOLUTION 37
TABLE 13: LOGIC LEVELS OF THE UART INTERFACE 44
TABLE 14: PIN DEFINITION OF THE UART INTERFACES 44
TABLE 15: PIN DEFINITION OF AUDIO INTERFACE 52
TABLE 16: AOUT2 OUTPUT CHARACTERISTICS 53
TABLE 17: TYPICAL ELECTRET MICROPHONE CHARACTERISTICS 57
TABLE 18: TYPICAL SPEAKER CHARACTERISTICS 57
TABLE 19: PIN DEFINITION OF THE SIM INTERFACE 58
TABLE 20: PIN DEFINITION OF THE ADC 61
TABLE 21: CHARACTERISTICS OF THE ADC 61
TABLE 22: BEHAVIORS OF THE RI 61
TABLE 23: WORKING STATE OF THE NETLIGHT 63
TABLE 24: PIN DEFINITION OF THE RF_ANT 66
TABLE 25: ANTENNA CABLE REQUIREMENTS 67
TABLE 26: ANTENNA REQUIREMENTS 67
TABLE 27: RF OUTPUT POWER 67
TABLE 28: RF RECEIVING SENSITIVITY 68
TABLE 29: OPERATING FREQUENCIES 68
TABLE 30: RECOMMENDED ANTENNA SPECIFICATIONS 69
TABLE 31: PIN DEFINITION OF THE BT_ANT 72
TABLE 32: ABSOLUTE MAXIMUM RATINGS 74
TABLE 33: OPERATING TEMPERATURE 75
TABLE 34: POWER SUPPLY RATINGS OF GSM PART (GNSS IS POWERED OFF) 75
TABLE 35: POWER SUPPLY RATINGS OF GNSS PART 76
TABLE 36: CURRENT CONSUMPTION OF GSM PART (GNSS IS POWERED OFF) 77
TABLE 37: CURRENT CONSUMPTION OF THE GNSS PART 79
TABLE 38: ESD ENDURANCE (TEMPERATURE: 25ºC, HUMIDITY: 45%) 79
TABLE 39: REEL PACKAGING 87
TABLE 40: RELATED DOCUMENTS 88
TABLE 41: TERMS AND ABBREVIATIONS 89

TABLE 42: DESCRIPTION OF DIFFERENT CODING SCHEMES 93
TABLE 43: GPRS MULTI-SLOT CLASSES 95

Figure Index

FIGURE 1: MODULE FUNCTIONAL DIAGRAM 18
FIGURE 2: PIN ASSIGNMENT 20
FIGURE 3: ALL-IN-ONE SOLUTION SCHEMATIC DIAGRAM 26
FIGURE 4: STAND-ALONE SOLUTION SCHEMATIC DIAGRAM 26
FIGURE 5: VOLTAGE RIPPLE DURING TRANSMITTING (GSM PART) 28
FIGURE 6: REFERENCE CIRCUIT FOR THE VBAT INPUT (GSM PART) 29
FIGURE 7: REFERENCE CIRCUIT FOR THE GNSS_VCC INPUT 29
FIGURE 8: REFERENCE CIRCUIT FOR POWER SUPPLY OF THE GSM PART 30
FIGURE 9: REFERENCE CIRCUIT DESIGN FOR GNSS PART 31
FIGURE 10: INTERNAL GNSS'S BACKUP DOMAIN POWER CONSTRUCTION 32
FIGURE 11: TURN ON THE MODULE WITH AN OPEN-COLLECTOR DRIVER 38
FIGURE 12: TURN ON THE MODULE WITH A BUTTON 39
FIGURE 13: TURN-ON TIMING 39
FIGURE 14: TURN-OFF TIMING BY USING THE PWRKEY PIN 41
FIGURE 15: TURN-OFF TIMING OF GNSS PART BY USING AT COMMAND 42
FIGURE 16: REFERENCE DESIGN FOR FULL-FUNCTION UART 47
FIGURE 17: REFERENCE DESIGN FOR UART PORT (THREE LINE CONNECTION) 47
FIGURE 18: REFERENCE DESIGN FOR UART PORT WITH HARDWARE FLOW CONTROL 48
FIGURE 19: REFERENCE DESIGN FOR FIRMWARE UPGRADE 48
FIGURE 20: REFERENCE DESIGN FOR DEBUG PORT 49
FIGURE 21: AUXILIARY AND GNSS UART PORT CONNECTION IN ALL-IN-ONE SOLUTION 50
FIGURE 22: AUXILIARY AND GNSS UART PORT CONNECTION IN STAND-ALONE SOLUTION 51
FIGURE 23: LEVEL MATCH DESIGN FOR 3.3V SYSTEM 51
FIGURE 24: SKETCH MAP FOR RS-232 INTERFACE MATCH 52
FIGURE 25: REFERENCE DESIGN FOR AIN 54
FIGURE 26: HANDSET INTERFACE DESIGN FOR AOUT1 55
FIGURE 27: SPEAKER INTERFACE DESIGN WITH AN AMPLIFIER FOR AOUT1 55
FIGURE 28: EARPHONE INTERFACE DESIGN 56
FIGURE 29: LOUD SPEAKER INTERFACE DESIGN 56
FIGURE 30: REFERENCE CIRCUIT FOR SIM1 INTERFACE WITH AN 8-PIN SIM CARD HOLDER 59
FIGURE 31: REFERENCE CIRCUIT FOR SIM1 INTERFACE WITH A 6-PIN SIM CARD HOLDER 59
FIGURE 32: REFERENCE CIRCUIT FOR SIM2 INTERFACE WITH A 6-PIN SIM CARD HOLDER 60
FIGURE 33: RI BEHAVIOR AS A RECEIVER WHEN VOICE CALLING 62
FIGURE 34: RI BEHAVIOR AS A CALLER 62
FIGURE 35: RI BEHAVIOR WHEN URC OR SMS RECEIVED 62
FIGURE 36: REFERENCE DESIGN FOR NETLIGHT 63
FIGURE 37: REFERENCE DESIGN FOR GSM ANTENNA 66
FIGURE 38: RF SOLDERING SAMPLE 69
FIGURE 39: REFERENCE DESIGN WITH ACTIVE ANTENNA 70
FIGURE 40: REFERENCE DESIGN WITH PASSIVE ANTENNA 71
FIGURE 41: REFERENCE DESIGN FOR BLUETOOTH ANTENNA 72

FIGURE 42: MC20 TOP AND SIDE DIMENSIONS (UNIT: MM)..... 81
FIGURE 43: MC20 BOTTOM DIMENSIONS (UNIT: MM) 82
FIGURE 44: RECOMMENDED FOOTPRINT (UNIT: MM) 83
FIGURE 45: TOP VIEW OF THE MODULE 84
FIGURE 46: BOTTOM VIEW OF THE MODULE 84
FIGURE 47: REFLOW SOLDERING THERMAL PROFILE 86
FIGURE 48: TAPE AND REEL SPECIFICATION 87
FIGURE 49: DIMENSIONS OF REEL..... 87
FIGURE 50: RADIO BLOCK STRUCTURE OF CS-1, CS-2 AND CS-3..... 93
FIGURE 51: RADIO BLOCK STRUCTURE OF CS-4 94

1 Introduction

This document defines the MC20 module and describes its hardware interface which is connected with the customer application as well as its air interface.

The document can help you quickly understand module interface specifications, as well as the electrical and mechanical details. Associated with application note and user guide, you can use MC20 module to design and set up mobile applications easily.

1.1. Safety Information

The following safety precautions must be observed during all phases of the operation, such as usage, service or repair of any cellular terminal or mobile incorporating MC20 module. Manufacturers of the cellular terminal should send the following safety information to users and operating personnel, and incorporate these guidelines into all manuals supplied with the product. If not so, Quectel assumes no liability for the customer's failure to comply with these precautions.

	Full attention must be given to driving at all times in order to reduce the risk of an accident. Using a mobile while driving (even with a handsfree kit) causes distraction and can lead to an accident. You must comply with laws and regulations restricting the use of wireless devices while driving.
	Switch off the cellular terminal or mobile before boarding an aircraft. Make sure it is switched off. The operation of wireless appliances in an aircraft is forbidden, so as to prevent interference with communication systems. Consult the airline staff about the use of wireless devices on boarding the aircraft, if your device offers a Airplane Mode which must be enabled prior to boarding an aircraft.
	Switch off your wireless device when in hospitals, clinics or other health care facilities. These requests are desinged to prevent possible interference with sentitive medical equipment.

	Cellular terminals or mobiles operating over radio frequency signal and cellular network cannot be guaranteed to connect in all conditions, for example no mobile fee or with an invalid SIM card. While you are in this condition and need emergent help, please remember using emergency call. In order to make or receive a call, the cellular terminal or mobile must be switched on and in a service area with adequate cellular signal strength.
	Your cellular terminal or mobile contains a transmitter and receiver. When it is ON , it receives and transmits radio frequency energy. RF interference can occur if it is used close to TV set, radio, computer or other electric equipment.
	In locations with potencially explosive atmospheres, obey all posted signs to turn off wireless devices such as your phone or other cellular terminals. Areas with potencially explosive atmospheres include fuelling areas, below decks on boats, fuel or chemical transfer or storage facilities, areas where the air contains chemicals or particles such as grain, dust or metal powders, etc.

2 Product Concept

2.1. General Description

MC20 is a multi-purpose module which integrates a high performance GNSS engine and a quad-band GSM/GPRS engine. It can work as **all-in-one** solution or **stand-alone** solution according to customers' application demands. For detailed introduction on **all-in-one** solution and **stand-alone** solution, please refer to ***Chapter 3.2***.

The quad-band GSM/GPRS engine can work at frequencies of GSM850MHz, EGSM900MHz, DCS1800MHz and PCS1900MHz. MC20 features GPRS multi-slot class 12 and supports the GPRS coding schemes CS-1, CS-2, CS-3 and CS-4. For more details about GPRS multi-slot classes and coding schemes, please refer to the ***Appendix B & C.***

The GNSS engine is a single receiver integrating GPS and BeiDou systems. It supports multiple positioning and navigation systems including autonomous GPS, BeiDou, SBAS (including WAAS, EGNOS, MSAS and GAGAN), and QZSS. It is able to achieve the industry's highest level of sensitivity, accuracy and TTFF with the lowest power consumption. The embedded flash memory provides capacity for storing user-specific configurations and allows for future updates.

MC20 is an SMD type module with 54 LCC pads and 14 LGA pads which can be easily embedded into applications. With a compact profile of 18.7mm × 16.0mm × 2.1mm, the module can meet almost all the requirements for M2M applications, including vehicle and personal tracking, wearable devices, security systems, wireless POS, industrial PDA, smart metering, remote maintenance & control, etc.

Designed with power saving technique, the current consumption of MC20's GSM part is as low as 1.2mA in SLEEP mode when DRX is 5 and the GNSS part is powered off. The GNSS engine also has many advanced power saving modes including standby and backup modes which can fit the requirement of low-power consumption in different scenes.

GSM part of MC20 is integrated with Internet service protocols such as TCP, UDP, PPP, HTTP and FTP. Extended AT commands have been developed for you to use these Internet service protocols easily.

EASY technology as a key feature of GNSS part of MC20 module is one kind of AGPS. Capable of collecting and processing all internal aiding information like GNSS time, ephemeris, last position, etc., the GNSS part will have a fast TTFF in either Hot or Warm start.

The module fully complies with the RoHS directive of the European Union.

2.2. Directives and Standards

The MC20module is designed to comply with the FCC statements. **FCC ID: XMR201609MC20**

The Host system using MC20 should have label “contains FCC ID: XMR201609MC20”.

2.2.1. 2.2.1. FCC Statement

Changes or modifications not expressly approved by the party responsible for compliance could void the user’s authority to operate the equipment.

2.2.2. FCC Radiation Exposure Statement

This equipment complies with FCC radiation exposure limits set forth for an uncontrolled environment. This equipment should be installed and operated with minimum distance 20cm between the radiator and your body as well as kept minimum 20cm from radio antenna depending on the Mobile status of this module usage. This module should NOT be installed and operating simultaneously with other radio. The manual of the host system, which uses MC20, must include RF exposure warning statement to advice user should keep minimum 20cm from the radio antenna of MC20 module depending on the Mobile status. Note: If a portable device (such as PDA) uses MC20 module, the device needs to do permissive change and SAR testing.

The following list indicates the performance of antenna gain in certificate testing.

Part Number	Frequency Range (MHz)	Peak Gain (XZ-V)	Average Gain(XZ-V)	VSWR	Impedance
3R007	GSM850:824～894MHz PCS1900: 1850～1990MHz	1 dBi typ.	1 dBi typ.	2 max	50Ω

2.3. Key Features

The following table describes the detailed features of MC20 module.

Table 1: Key Features (GMS/GPRS Part of MC20)

Features	Implementation

Power Supply	Single supply voltage: 3.3V ~ 4.6V Typical supply voltage: 4V
Power Saving	Typical power consumption in SLEEP mode (GNSS is powered off): 1.2mA@DRX=5 0.8mA@DRX=9
Frequency Bands	● Quad-band: GSM850, EGSM900, DCS1800, PCS1900. ● The module can search these frequency bands automatically ● The frequency bands can be set by AT commands ● Compliant to GSM Phase 2/2+
GSM Class	Small MS
Transmitting Power	● Class 4 (2W) at GSM850 and EGSM900 ● Class 1 (1W) at DCS1800 and PCS1900
GPRS Connectivity	● GPRS multi-slot class 12 (default) ● GPRS multi-slot class 1~12 (configurable) ● GPRS mobile station class B
DATA GPRS	● GPRS data downlink transfer: max. 85.6kbps ● GPRS data uplink transfer: max. 85.6kbps ● Coding scheme: CS-1, CS-2, CS-3 and CS-4 ● Support the protocols PAP (Password Authentication Protocol) usually used for PPP connections ● Internet service protocols TCP/UDP, FTP, PPP, HTTP, NTP, PING ● Support Packet Broadcast Control Channel (PBCCH) ● Support Unstructured Supplementary Service Data (USSD)
Temperature Range	● Operation temperature range: -35°C ~ +75°C [1)] ● Extended temperature range: -40°C ~ +85°C [2)]
SMS	● Text and PDU mode ● SMS storage: SIM card
SIM Interface	● Support SIM card: 1.8V, 3.0V ● Support Dual SIM Single Standby
Audio Features	Speech codec modes: ● Half Rate (ETS 06.20) ● Full Rate (ETS 06.10) ● Enhanced Full Rate (ETS 06.50/06.60/06.80) ● Adaptive Multi-Rate (AMR) ● Echo Suppression ● Noise Reduction ● Embedded one amplifier of class AB with maximum driving power up to 800mW
UART Interfaces	UART Port: ● Seven lines on UART port interface ● Used for AT command and GPRS data ● Used for PMTK command and NMEA output in **all-in-one** solution

	● Multiplexing function ● Support autobauding from 4800bps to 115200bps Debug Port: ● Two lines on debug port interface DBG_TXD and DBG_RXD ● Debug port only used for firmware debugging Auxiliary Port: ● Two lines on auxiliary port interface: TXD_AUX and RXD_AUX ● Used for communication with the GNSS Part in **all-in-one** solution
Phonebook Management	Support phonebook types: SM, ME, ON, MC, RC, DC, LD, LA
SIM Application Toolkit	Support SAT class 3, GSM 11.14 Release 99
Physical Characteristics	Size: (18.7±0.15) × (16±0.15) × (2.1±0.2)mm Weight: Approx. 1.3g
Firmware Upgrade	Firmware upgrade via UART port
Antenna Interface	Connected to antenna pad with 50 Ohm impedance control

NOTES

1. [1)] Within operation temperature range, the module is 3GPP compliant.
2. [2)] Within extended temperature range, the module remains the ability to establish and maintain a voice, SMS, data transmission, emergency call, etc. There is no unrecoverable malfunction. There are also no effects on radio spectrum and no harm to radio network. Only one or more parameters like P_{out} might reduce in their value and exceed the specified tolerances. When the temperature returns to the normal operating temperature levels, the module will meet 3GPP compliant again.

Table 2: Coding Schemes and Maximum Net Data Rates over Air Interface

Coding Scheme	1 Timeslot	2 Timeslot	4 Timeslot
CS-1	9.05kbps	18.1kbps	36.2kbps
CS-2	13.4kbps	26.8kbps	53.6kbps
CS-3	15.6kbps	31.2kbps	62.4kbps
CS-4	21.4kbps	42.8kbps	85.6kbps

Table 3: Key Features (GNSS Part of MC20)

Features	Implementation
GNSS	● GPS+BeiDou
Power Supply	● Supply voltage: 2.8V~4.3V Typical: 3.3V
Power Consumption	● Acquisition: 25mA @-130dBm (GPS) ● Tracking: 19mA @-130dBm (GPS) ● Acquisition: 23mA @-130dBm (GPS+BeiDou) ● Tracking: 18mA @-130dBm (GPS+BeiDou) ● Standby: 300uA @VCC=3.3V ● Backup: 14uA @V_BCKP=3.3V
Receiver Type	● GPS L1 1575.42MHz C/A Code ● BeiDou B1 1561.098MHz C/A Code
Sensitivity GPS+BeiDou	● Acquisition: -148dBm ● Reacquisition: -160dBm ● Tracking: -163dBm
Time-to-First-Fix (EASY Enabled) [1)]	● Cold Start: <15s average @-130dBm ● Warm Start: <5s average @-130dBm ● Hot Start: 1s @-130dBm
Time-to-First-Fix (EASY Disabled)	● Cold Start (Autonomous): <35s average @-130dBm ● Warm Start (Autonomous): <30s average @-130dBm ● Hot Start (Autonomous): 1s @-130dBm
Horizontal Position Accuracy (Autonomous)	● <2.5 m CEP @-130dBm
Update Rate	● Up to 10Hz, 1Hz by default
Velocity Accuracy	● Without aid: 0.1m/s
Acceleration Accuracy	● Without aid: 0.1m/s²
Dynamic Performance	● Maximum Altitude: 18,000m ● Maximum Velocity: 515m/s ● Acceleration: 4G
GNSS UART Port	● GNSS UART port: GNSS_TXD and GNSS_ RXD ● Support baud rate from 4800bps to 115200bps; 115200bps by default ● Used for communication with the GSM Part in **all-in-one** solution ● Used for communication with peripherals in **stand-alone** solution

NOTE

[1] In this mode, GNSS part's backup domain should be valid.

Table 4: Protocols Supported by the Module

Protocol	Type
NMEA	output, ASCII, 0183, 3.01
PMTK	Input/output, MTK proprietary protocol

NOTE

Please refer to ***document [2]*** for details of NMEA standard protocol and MTK proprietary protocol.

2.4. Functional Diagram

The following figure shows a block diagram of MC20 and illustrates the major functional parts.

- Radio frequency part
- Power management
- Peripheral interfaces
  —Power supply
  —Turn-on/off interface
  —UART interface
  —Audio interface
  —SIM interface
  —ADC interface
  —RF interface
  —PCM interface
  —BT interface
  —SD interface

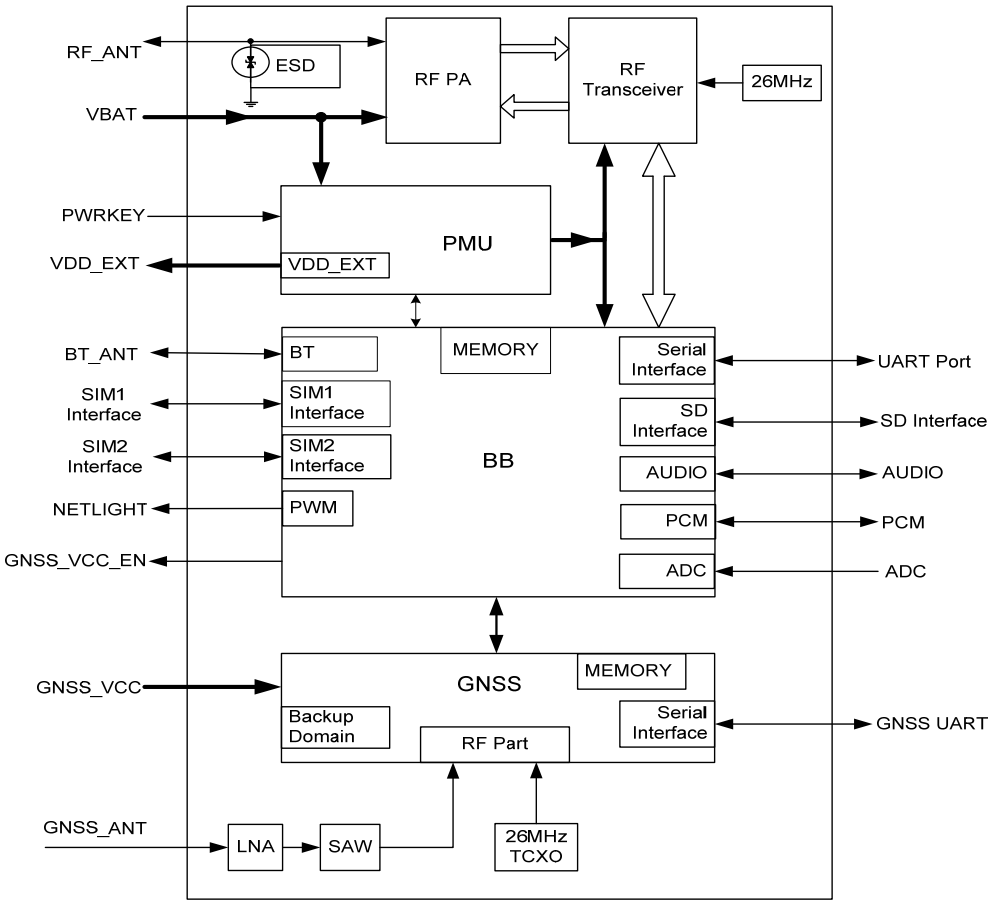

Figure 1: Module Functional Diagram

2.5. Evaluation Board

In order to help you develop applications with MC20, Quectel supplies an evaluation board (EVB), TE-A board, RS-232 to USB cable, power adapter, earphone, GSM antenna, GNSS antenna and other peripherals to control or test the module. For details, please refer to ***document [11]***.

3 Application Functions

MC20 is an SMD type module with 54 LCC pads and 14 LGA pads. The following chapters provide detailed descriptions about these pins.

- Pin of module
- Power supply
- Operating modes
- Power on/down
- Power saving
- Backup domain of GNSS
- Serial interfaces
- Audio interfaces
- SIM card interface
- ADC
- Behaviors of the RI
- Network status indication
- RF transmitting signal indication
- EASY autonomous AGPS technology
- EPO offline AGPS technology
- Multi-tone AIC

3.1. Pin of Module

3.1.1. Pin Assignment

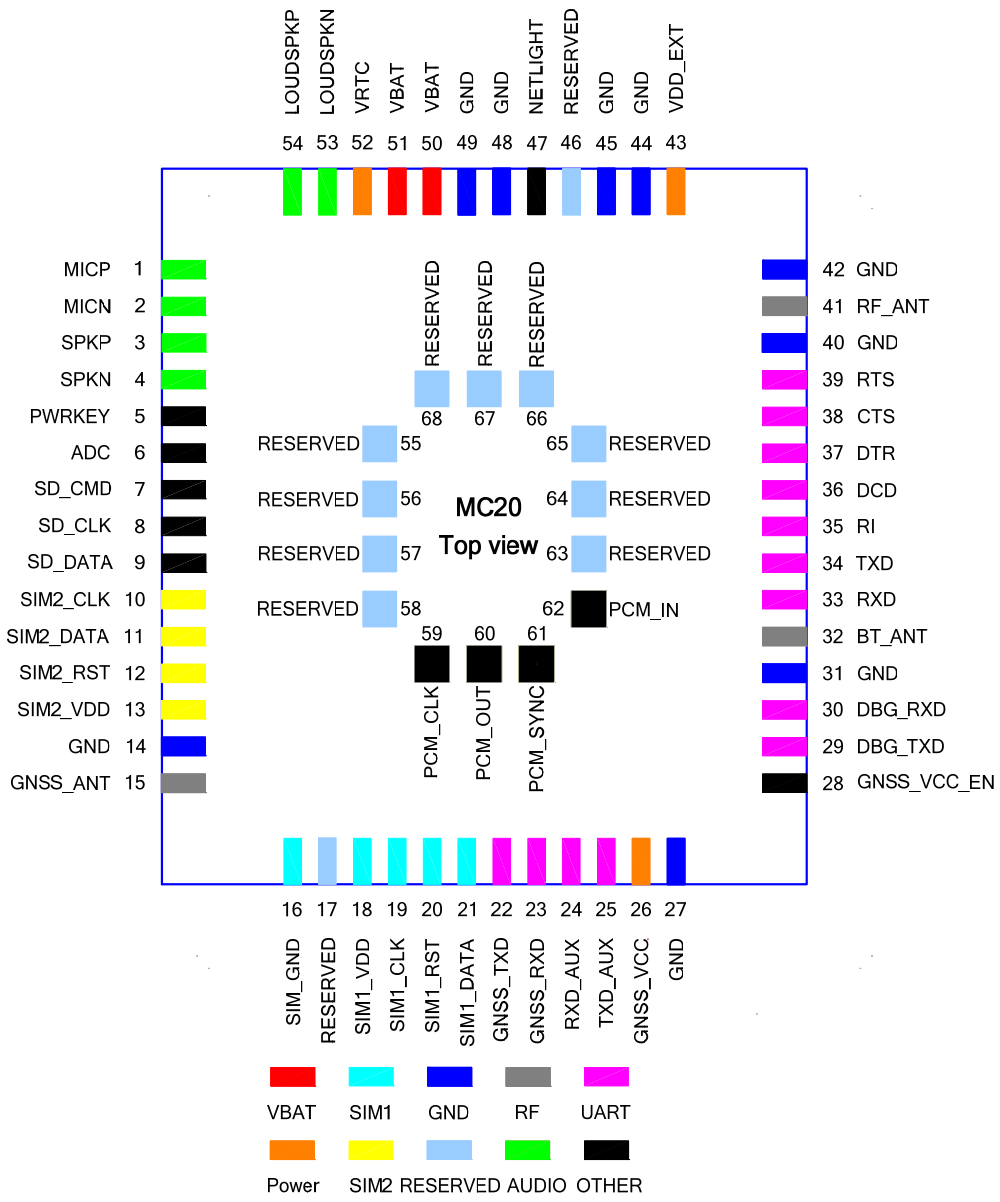

Figure 2: Pin Assignment

NOTE

Please keep all reserved pins open.

3.1.2. Pin Description

Table 5: I/O Parameters Definition

Type	Description
IO	Bidirectional input/output
DI	Digital input
DO	Digital output
PI	Power input
PO	Power output
AI	Analog input
AO	Analog output

Table 6: Pin Description

Power Supply					
PIN Name	**PIN No.**	**I/O**	**Description**	**DC Characteristics**	**Comment**
VBAT	50, 51	PI	Power supply of GSM/GPRS part: VBAT=3.3V~4.6V	$V_I$max=4.6V $V_I$min=3.3V $V_I$norm=4.0V	It must be able to provide sufficient current up to 1.6A in a transmitting burst.
GNSS_ VCC	26	PI	Power supply of GNSS part: GNSS_VCC=2.8V~4.3V	$V_I$max=4.3V $V_I$min=2.8V $V_I$norm=3.3V	Assure load current no less than 150mA.
VRTC	52	IO			Keep this pin open
VDD_ EXT	43	PO	Supply 2.8V voltage for external circuit.	$V_O$max=2.9V $V_O$min=2.7V $V_O$norm=2.8V $I_O$max=20mA	1. If unused, keep this pin open. 2. Recommend adding a 2.2~4.7uF bypass capacitor, when using this pin for power supply.
GND	14,27,		Ground		

	31,40, 42,44, 45,48, 49				
Turn on/off					
PIN Name	**PIN No.**	**I/O**	**Description**	**DC Characteristics**	**Comment**
PWRKEY	5	DI	Power on/off key. PWRKEY should be pulled down for a moment to turn on or turn off the system.	V_{IL}max= 0.1×VBAT V_{IH}min= 0.6×VBAT V_{IH}max=3.1V	
Audio Interface					
PIN Name	**PIN No.**	**I/O**	**Description**	**DC Characteristics**	**Comment**
MICP MICN	1, 2	AI	Positive and negative voice input	Refer to ***Chapter 3.7.6***	If unused, keep these pins open.
SPKP SPKN	3, 4	AO	Channel 1 positive and negative voice output		If unused, keep these pins open. Support both voice and ringtone output.
LOUD SPKP LOUD SPKN	54 53	AO	Channel 2 positive and negative voice output		1. If unused, keep these pins open. 2. Integrate a Class- AB amplifier internally. 3. Support both voice and ringtone output.
Network Status Indicator					
PIN Name	**PIN No.**	**I/O**	**Description**	**DC Characteristics**	**Comment**
NETLIGHT	47	DO	Network status indication	V_{OH}min= 0.85×VDD_EXT V_{OL}max= 0.15×VDD_EXT	If unused, keep this pin open.
UART Port					
PIN Name	**PIN No.**	**I/O**	**Description**	**DC Characteristics**	**Comment**
TXD	34	DO	Transmit data	V_{IL}min=0V	If only TXD, RXD

RXD	33	DI	Receive data	V_{IL}max= 0.25×VDD_EXT V_{IH}min= 0.75×VDD_EXT V_{IH}max= VDD_EXT+0.2 V_{OH}min= 0.85×VDD_EXT V_{OL}max= 0.15×VDD_EXT	and GND are used for communication, it is recommended to keep all other pins open.
DTR	37	DI	Data terminal ready		
RI	35	DO	Ring indication		
DCD	36	DO	Data carrier detection		
CTS	38	DO	Clear to send		
RTS	39	DI	Request to send		
Debug Port					
PIN Name	**PIN No.**	**I/O**	**Description**	**DC Characteristics**	**Comment**
DBG_ TXD	29	DO	Transmit data	The same as UART port	If unused, keep these pins open.
DBG_ RXD	30	DI	Receive data		
Auxiliary UART Port					
PIN Name	**PIN No.**	**I/O**	**Description**	**DC Characteristics**	**Comment**
TXD_ AUX	25	DO	Transmit data	The same as UART port	Refer to ***Chapter 3.6.3***
RXD_ AUX	24	DI	Receive data		
GNSS UART Port					
PIN Name	**PIN No.**	**I/O**	**Description**	**DC Characteristics**	**Comment**
GNSS_ TXD	22	DO	Transmit data	V_{OL}max=0.42V V_{OH}min=2.4V V_{OH}nom=2.8V V_{IL}min=-0.3V V_{IL}max=0.7V V_{IH}min=2.1V V_{IH}max=3.1V	Refer to ***Chapter 3.6.3***
GNSS_ RXD	23	DI	Receive data		
SIM Interface					
PIN Name	**PIN No.**	**I/O**	**Description**	**DC Characteristics**	**Comment**
SIM1_ VDD SIM2_ VDD	18 13	PO	Power supply for SIM card	The voltage can be selected by software automatically. Either 1.8V or 3.0V.	All signals of SIM interface should be protected against ESD with a TVS diode array.
SIM1_ CLK SIM2_ CLK	19 10	DO	SIM clock	V_{OL}max= 0.15×SIM_VDD	

				V_{OH}min= 0.85×SIM_VDD	Maximum trace length is 200mm from the module pad to SIM card holder.
SIM1_ DATA SIM2_ DATA	21 11	IO	SIM data	V_{IL}max= 0.25×SIM_VDD V_{IH}min= 0.75×SIM_VDD V_{OL}max= 0.15×SIM_VDD V_{OH}min= 0.85×SIM_VDD	
SIM1_ RST SIM2_ RST	20 12	DO	SIM reset	V_{OL}max= 0.15×SIM_VDD V_{OH}min= 0.85×SIM_VDD	
SIM_ GND	16		SIM ground		
SIM1_ PRESENCE	37	I	SIM1 card detection	V_{IL}min =0V V_{IL}max = 0.25×VDD_EXT V_{IH}min = 0.75×VDD_EXT VIHmax = VDD_EXT+0.2	
ADC					
PIN Name	**PIN No.**	**I/O**	**Description**	**DC Characteristics**	**Comment**
ADC	6	AI	General purpose analog to digital converter.	Voltage range: 0V to 2.8V	If unused, keep this pin open.
Digital Audio Interface (PCM)					
PCM_CLK	59	DO	PCM clock		If unused, keep these pins open
PCM_OUT	60	DO	PCM data output		
PCM_SYNC	61	DO	PCM frame synchronization		
PCM_IN	62	DI	PCM data input		
SD Card Interface					
SD_CMD	7	DO	SD Command line		If unused, keep these pins open
SD_CLK	8	DO	SD clock		
SD_DATA	9	IO	SD data line		

Antenna Interface					
PIN Name	**PIN No.**	**I/O**	**Description**	**DC Characteristics**	**Comment**
RF_ ANT	41	IO	GSM antenna pad	Impedance of 50Ω	
BT_ ANT	32	IO	BT antenna pad	Impedance of 50Ω	If unused, keep this pin open.
GNSS_ ANT	15	I	GNSS signal input	Impedance of 50Ω	
Other Interface					
PIN Name	**PIN No.**	**I/O**	**Description**	**DC Characteristics**	**Comment**
GNSS_ VCC_EN	28	O	GNSS power enabled	V_{OH}min= 0.85×VDD_EXT V_{OL}max= 0.15×VDD_EXT	Refer to ***Chapter 3.3.3.2*** in **all-in-one** solution. Keep this pin open in **stand-alone** solution.
RESERVED	17, 46 55, 56, 57, 58, 63, 64, 65, 66, 67, 68,				Keep these pins open

Table 7: Multiplexed Functions

PIN Name	PIN No.	Function After Reset	Alternate Function
DTR/SIM1_PRESENCE	37	DTR	SIM1_PRESENCE

3.2. Application Modes Introduction

MC20 module integrates both GSM and GNSS engines which can work as a whole (**all-in-one** solution) unit or work relatively independent (**stand-alone** solution) according to customer demands.

All-in-one solution allows for convenient communication between GSM and GNSS parts. The commands and data (e.g. AT and PMTK commands, NMEA sentences output, etc.) in both GSM and GNSS parts are

transmitted through UART port, thus realizing communication between the module and the MCU.

In **stand-alone** solution, GSM data and AT commands are transmitted through UART port; while GNSS data such as PMTK command and NMEA sentences output are transmitted through GNSS UART port.

The hardware difference between **all-in-one** solution and **stand-alone** solution mainly lies in the connection method of UART, UART_AUX, and GNSS_UART. The corresponding schematic diagrams are shown below.

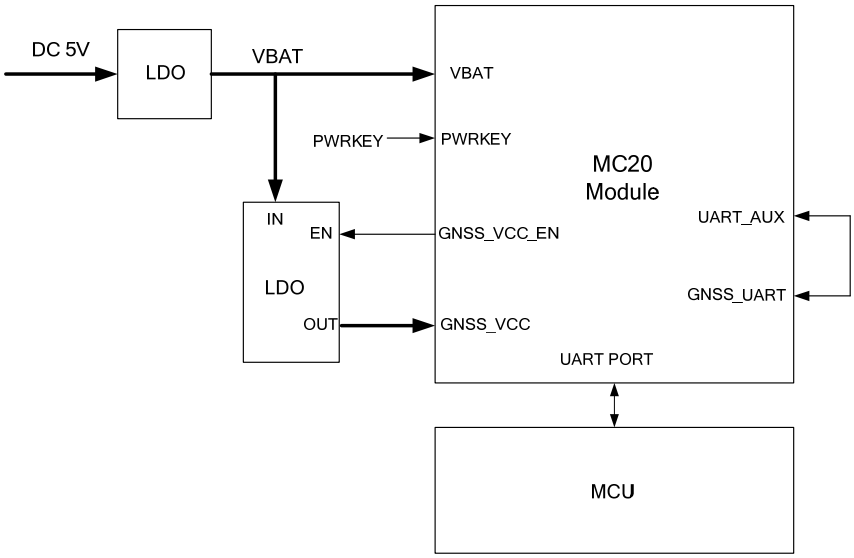

Figure 3: All-in-one Solution Schematic Diagram

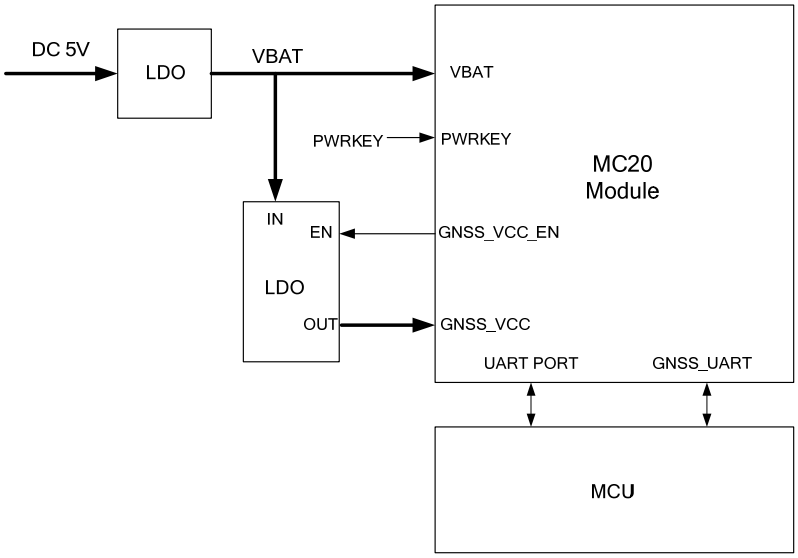

Figure 4: Stand-alone Solution Schematic Diagram

NOTE

In order to ensure the normal operation of GNSS part, please don't power off the GSM part.

Table 8: Comparison between All-in-one and Stand-alone Solution

	All-in-one.	Stand-alone	Remarks
Firmware upgrade	Firmware upgrade via UART Port (GSM and GNSS Parts share the same firmware package)	Firmware upgrade via UART Port (GSM and GNSS Parts share the same firmware package)	Refer to ***Chapter 3.6.1.3*** for details
Data transmission	Both GSM and GNSS data are transmitted through the GSM UART Port	GSM data is transmitted through the GSM UART Port. GNSS data is transmitted through the GNSS UART Port.	
GNSS wake up GSM	GNSS can wake up GSM by interrupts	N/A	
GNSS's EPO data download	EPO data is downloaded directly through the GSM part.	MCU receives the EPO data which is downloaded through the GSM part, and then transmit it to the GNSS part.	Refer to ***Chapter 3.13*** for details

3.3. Power Supply

3.3.1. Power Features

The power supply of the GSM part is one of the key issues in MC20 module design. Due to the 577us radio burst in GSM part every 4.615ms, the power supply must be able to deliver high current peaks in a burst period. During these peaks, drops on the supply voltage must not exceed the minimum working voltage of the GSM part.

The maximum current consumption of GSM part could reach 1.6A during a burst transmission. It will cause a large voltage drop on the VBAT. In order to ensure stable operation of the part, it is recommended that the maximum voltage drop during the burst transmission does not exceed 400mV.

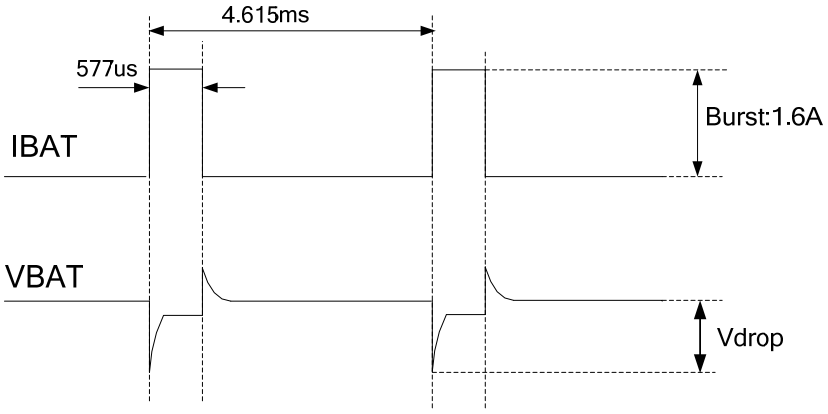

Figure 5: Voltage Ripple during Transmitting (GSM Part)

The power supply for GNSS part is controlled by the GSM part through AT command control over GNSS_VCC_EN pin.

3.3.2. Decrease Supply Voltage Drop

3.3.2.1. Decrease Supply Voltage Drop for GSM Part

Power supply range of the GSM part is from 3.3V to 4.6V. Make sure that the input voltage will never drop below 3.3V even in a burst transmission. If the power voltage drops below 3.3V, the module will be turned off automatically. For better power performance, it is recommended to place a 100uF tantalum capacitor with low ESR (ESR=0.7Ω) and ceramic capacitors 100nF, 33pF and 10pF near the VBAT pin. A reference circuit is illustrated in the following figure.

The VBAT trace should be wide enough to ensure that there is not too much voltage drop during burst transmission. The width of trace should be no less than 2mm; and in principle, the longer the VBAT trace, the wider it will be.

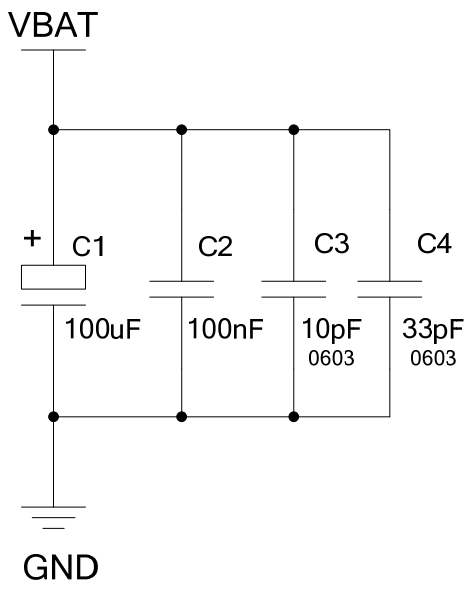

Figure 6: Reference Circuit for the VBAT Input (GSM Part)

3.3.2.2. Decrease Supply Voltage Drop for GNSS Part

Power supply range of GNSS part is from 2.8 to 4.3V. GNSS_VCC's maximum average current is 40mA during GNSS acquisition after power up. So it is important to supply sufficient current and make the power clean and stable. The decouple combination of 10uF and 100nF capacitor is recommended nearby GNSS_VCC pin. A reference circuit is illustrated in the following figure.

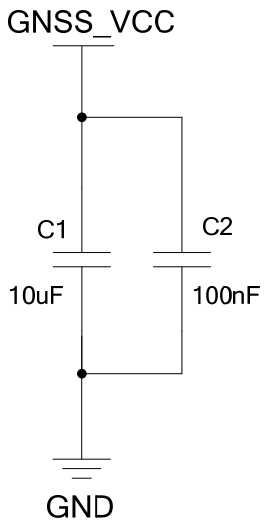

Figure 7: Reference Circuit for the GNSS_VCC Input

3.3.3. Reference Design for Power Supply

3.3.3.1. Reference Design for Power Supply of GSM Part

The power supply of GSM part is capable of providing sufficient current up to 2A at least. If the voltage drop between the input and output is not too high, it is suggested to use a LDO as the GSM part's power supply. If there is a big voltage difference between the input source and the desired output (VBAT), a switcher power converter is recommended to be used as the power supply.

The following figure shows a reference design for +5V input power source for GSM part. The designed output for the power supply is 4.0V and the maximum load current is 3A. In addition, in order to get a stable output voltage, a zener diode is placed close to the pins of VBAT. As to the zener diode, it is suggested to use a zener diode whose reverse zener voltage is 5.1V and dissipation power is more than 1 Watt.

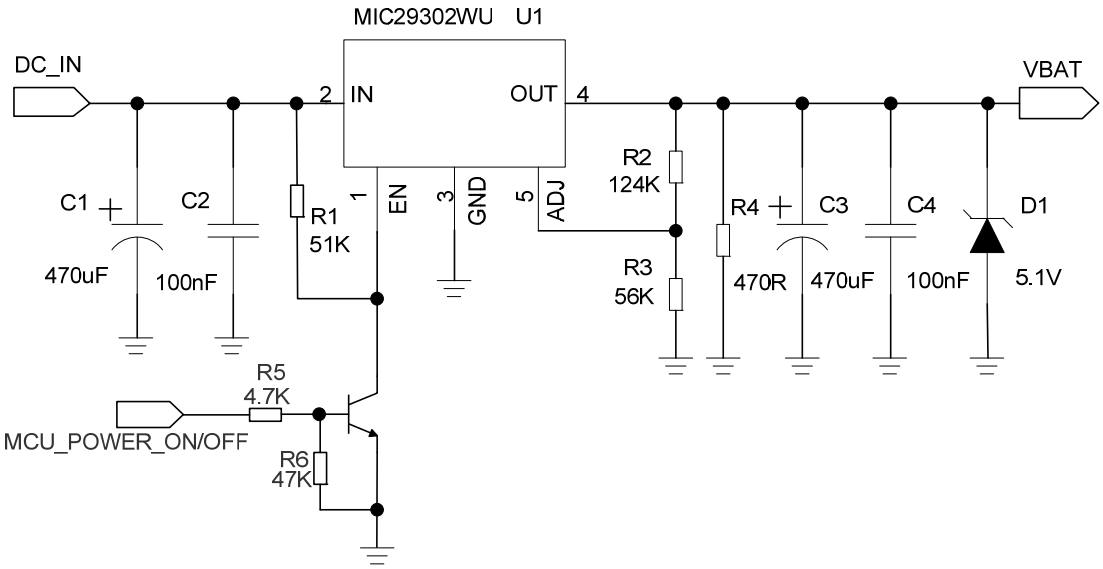

Figure 8: Reference Circuit for Power Supply of the GSM Part

NOTE

It is suggested to control the module's main power supply (VBAT) via LDO enable pin to restart the module when the module becomes abnormal. Power switch circuit like P-channel MOSFET switch circuit can also be used to control VBAT.

3.3.3.2. Reference Design for Power Supply of GNSS Part

The power supply for GNSS part is controlled by the GSM part through AT command control over GNSS_VCC_EN pin.

A reference circuit for the GNSS part power supply is given below. Please pay attention to the electrical characteristics of GNSS_VCC_EN to match LDO's EN pin. Please refer to ***document [1]*** for details about the AT commands for GNSS control.

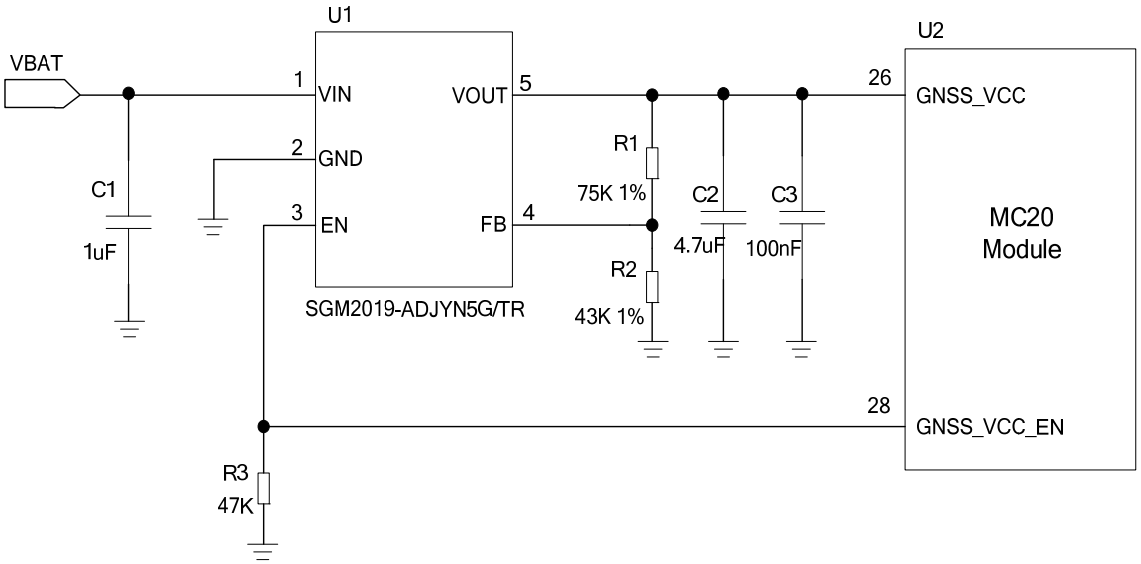

Figure 9: Reference Circuit Design for GNSS Part

3.3.4. Monitor Power Supply

The command **AT+CBC** can be used to monitor the supply voltage of the GSM part. The unit of the displayed voltage is mV.

For details, please refer to ***document [1]***.

3.3.5. Backup Domain of GNSS

The GNSS part of MC20 module features a backup domain which contains all the necessary GNSS information for quick start-up and a small amount of user configuration variables. In GNSS's backup mode, the backup domain is still alive. As long as the backup domain is alive, EASY technology will be available.

As the GNSS's backup domain is powered by VBAT, the GNSS's backup mode will be active as long as the following conditions are satisfied at the same time:

- The main power supply (VBAT) is remained
- The GSM part is powered on
- The GNSS part is turned off by **AT+QGNSSC=0** command via UART

In this case, the VRTC pin can be kept floating. A reference schematic diagram is shown below.

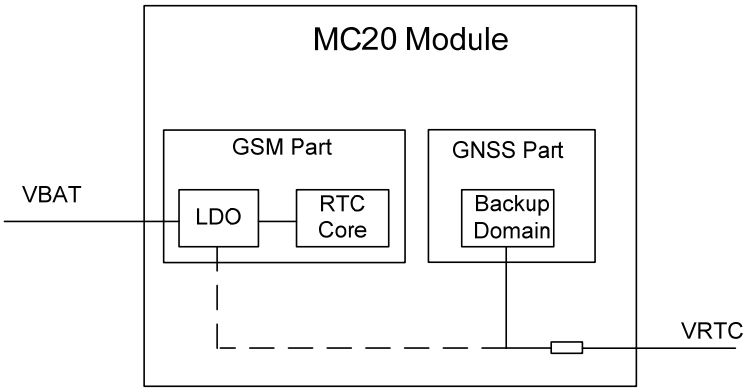

Figure 10: Internal GNSS's Backup Domain Power Construction

3.4. Operating Modes

3.4.1. Operating Modes of GSM Part

The table below briefly summarizes the various operating modes of GSM part mentioned in the following chapters.

Table 9: Operating Modes Overview of GSM Part

Modes	Function	
GSM Normal Operation	GSM/GPRS Sleep	After enabling sleep mode by **AT+QSCLK=1**, the GSM part will automatically enter into Sleep Mode if DTR is set to high level and there is no interrupt (such as GPIO interrupt or data on UART port). In this case, the current consumption of the GSM part will reduce to the minimal level. During Sleep Mode, the GSM part can still receive paging message and SMS from the system normally.
	GSM IDLE	Software is active. The GSM part has registered on GSM network, and it is ready to send and receive GSM data.
	GSM TALK	GSM connection is ongoing. In this mode, the power consumption is decided by the configuration of Power Control Level (PCL), dynamic DTX control and the working RF band.

	GPRS IDLE	The GSM part is not registered on GPRS network. It is not reachable through GPRS channel.
	GPRS STANDBY	The GSM part is registered on GPRS network, but no GPRS PDP context is active. The SGSN knows the Routing Area where the module is located at.
	GPRS READY	The PDP context is active, but no data transfer is ongoing. The GSM part is ready to receive or send GPRS data. The SGSN knows the cell where the module is located at.
	GPRS DATA	There is GPRS data in transfer. In this mode, power consumption is decided by the PCL, working RF band and GPRS multi-slot configuration.
POWER DOWN	Normal shutdown by sending the **AT+QPOWD=1** command or using the PWRKEY pin. The power management ASIC disconnects the power supply from the base band part of the GSM part. Software is not active. The UART interfaces are not accessible. Operating voltage (connected to VBAT) remains applied.	
Minimum Functionality Mode (without removing power supply)	**AT+CFUN** command can set the GSM part to a minimum functionality mode without removing the power supply. In this case, the RF part of the GSM part will not work or the SIM card will not be accessible, or both RF part and SIM card will be disabled; but the UART port is still accessible. The power consumption in this case is very low.	

Based on system requirements, there are several actions to drive the GSM part to enter into low current consumption status. For example, **AT+CFUN** can be used to set the part into minimum functionality mode, and DTR hardware interface signal can be used to lead the system to Sleep Mode.

3.4.1.1. Minimum Functionality Mode

Minimum functionality mode reduces the functionality of the GSM part to a minimum level. The consumption of the current can be minimized when the slow clocking mode is activated at the same time. The mode is set via the **AT+CFUN** command which provides the choice of the functionality levels <fun>=0, 1, 4.

- 0: minimum functionality
- 1: full functionality (default)
- 4: disable from both transmitting and receiving RF signals

If the GSM part is set to minimum functionality by **AT+CFUN=0**, the RF function and SIM card function would be disabled. In this case, the UART port is still accessible, but all AT commands related with RF function or SIM card function will be unavailable.

If the GSM part is set by the command **AT+CFUN=4**, the RF function will be disabled, but the UART port is still active. In this case, all AT commands related with RF function will be unavailable.

After the GSM part is set by **AT+CFUN=0** or **AT+CFUN=4**, it can return to full functionality mode by **AT+CFUN=1**.

For detailed information about **AT+CFUN**, please refer to ***document [1]***.

3.4.1.2. SLEEP Mode

SLEEP mode is disabled by default. It can be enabled by **AT+QSCLK=1** and the premise is that the GNSS is powered off. The default setting is **AT+QSCLK=0**, and in this mode, the GSM part cannot enter SLEEP mode.

When the GSM part is set by the command **AT+QSCLK=1**, you can control the part to enter into or exit from the SLEEP mode through pin DTR. When DTR is set to high level, and there is no on-air or hardware interrupt such as GPIO interrupt or data on UART port, the GSM part will enter into SLEEP mode automatically. In this mode, the GSM part can still receive voice, SMS or GPRS paging from network, but the UART port does not work.

3.4.1.3. Wake up GSM Part from SLEEP Mode

When the GSM part is in the SLEEP mode, it can be woken up through the following methods:

- If the DTR Pin is set low, it would wake up the GSM part from the SLEEP mode. The UART port will be active within 20ms after DTR is changed to low level.
- Receiving a voice or data call from network wakes up the GSM part.
- Receiving an SMS from network wakes up the GSM part.

NOTE

DTR pin should be held at low level during communication between the GSM part and the DTE.

3.4.2. Operating Modes of GNSS Part

3.4.2.1. Full on Mode

Full on mode includes tracking mode and acquisition mode. Acquisition mode is defined as that the GNSS part starts to search satellites, and to determine the visible satellites, coarse carrier frequency & code phase of satellite signals. When the acquisition is completed, it switches to tracking mode automatically. Tracking mode is defined as that the GNSS part tracks satellites and demodulates the navigation data

from specific satellites.

When the GNSS_VCC is valid, the GNSS part will enter into full on mode automatically. The following table describes the default configuration of full on mode.

Table 10: Default Configuration of Full on Mode (GNSS Part)

Item	Configuration	Comment
Baud Rate	115200bps	
Protocol	NMEA	RMC, VTG, GGA, GSA, GSV and GLL
Update Rate	1Hz	
SBAS	Enable	
AIC	Enable	
LOCUS	Disable	
Easy Technology	Enable	EASY will be disabled automatically when update rate exceeds 1Hz.
GNSS	GPS+BeiDou	

In full on mode, the consumption complies with the following regulations:

When the GNSS part is powered on, the average current will rush to 40mA and last for a few seconds; then the consumption will be decreased to the acquisition current marked in ***table 3*** and we defined this state as acquisition state, and also it will last for several minutes until it switches to tracking state automatically. The consumption in tracking state is less than that in acquisition state. The value is also listed in ***table 3.***

Sending PMTK commands allows for switching among multiple positioning systems:

- $PMTK353,0,0,0,0,1*2A: search BDS satellites only
- $PMTK353,1,0,0,0,0*2A: search GPS satellites only
- $PMTK353,1,0,0,0,1*2B: search GPS and BDS satellites

NOTE

In **all-in-one** solution, make sure the GNSS part is powered on before sending these PMTK commands.

3.4.2.2. Standby Mode

Standby mode is a low-power consumption mode. In standby mode, the internal core and I/O power domain are still active; but RF and TCXO are powered off, and the GNSS part stops satellites search and navigation. The way to enter into standby mode is using PMTK commands.

When the GNSS part exits from standby mode, it will use all internal aiding information like GNSS time, ephemeris, last position, etc., to ensure the fastest possible TTFF in either Hot or Warm start. The typical current consumption is about 300uA @GNSS_VCC=3.3V in standby mode.

Sending the following PMTK command can make GNSS part enter into standby mode:

- $PMTK161,0*28: make sure the GNSS part is powered on before sending the command in **all-in-one** solution.

The following methods will make GNSS part exit from standby mode:

- Sending any data via UART will make GNSS part exit from standby mode in **all-in-one** solution.
- Sending any data via GNSS_UART will make GNSS part exit from standby mode in **stand-alone** solution.

3.4.2.3. Backup Mode

Backup mode requires lower power consumption than standby mode. In this mode, the GNSS part stops acquiring and tracking satellites, but the backed-up memory in backup domain which contains all the necessary GNSS information for quick start-up and a small amount of user configuration variables is alive. As long as the backup domain is alive, EASY technology is available. The current consumption in this mode is about 14uA.

The following method will make GNSS part enter into backup mode:

- When VBAT is kept powered and the GSM part is powered on, sending **AT+QGNSSC=0** will make GNSS part enter into backup mode from full on mode.

The following method will make GNSS part exit from backup mode:

- Sending **AT+QGNSSC=1** via UART, the GNSS part will exit from backup mode and enter full on mode immediately.

NOTE

In order to enable GNSS part working in backup mode, please make sure the GSM part is powered on.

3.4.3. Summary of GSM and GNSS Parts' State in All-in-one Solution

Table 11: Combination States of GSM and GNSS Parts in All-in-one Solution

GSM Part Modes	GNSS Part Modes		
	Full on	Standby	Backup
Normal	✓	✓	✓
Sleep	✓	✓	✓
Minimum Functionality	✓	✓	✓

3.4.4. Summary of GSM and GNSS Parts' State in Stand-alone Solution

Table 12: Combination States of GSM and GNSS Parts in Stand-alone Solution

GSM Part Modes	GNSS Part Modes		
	Full on	Standby	Backup
Normal	✓	✓	✓
Sleep	✓	✓	✓
Minimum Functionality	✓	✓	✓

NOTES

1. The mark ✓ means that the Part supports this mode.
2. In **all-in-one** solution, all PMTK commands used for the GNSS part should be sent through the GSM UART after the GNSS part is powered on. Make sure the GSM UART Port is accessible.
3. In **all-in-one** solution, when the GSM part is in sleep mode, the GNSS part can work in either standby or full on mode. However, if NMEA GPS data is needed, the GSM part should be woken up first and then send the corresponding AT command to get. For detailed AT command information, please refer to ***document [1]***.
4. In **stand-alone** solution, all PMTK commands used for the GNSS part or NMEA output can be sent or received through GNSS UART port when the GSM part is powered on.

3.5. Power on and down

3.5.1. Power on

The module can be turned on by driving the pin PWRKEY to a low level voltage. An open collector driver circuit is suggested to control the PWRKEY. A simple reference circuit is illustrated as below.

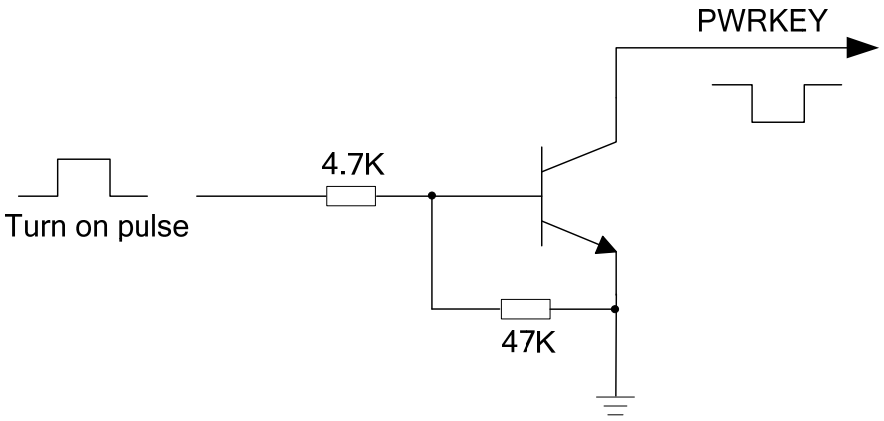

Figure 11: Turn on the Module with an Open-collector Driver

NOTES

1. MC20 module is set to autobauding mode (AT+IPR=0) by default. In autobauding mode, URC **RDY** is not reported to the host controller after the module is powered on. When the module is powered on after a delay of 4 or 5 seconds, it can receive AT commands. Host controller should first send an **AT** string in order that the module can detect baud rate of host controller, and it should continue to send the next **AT** string until receiving **OK** string from the module. Then enter **AT+IPR=x;&W** to set a fixed baud rate for the module and save the configuration to flash memory of the module. After these configurations, the URC **RDY** would be received from the UART Port of the module every time when the module is powered on. For more details, refer to the section **AT+IPR** in ***document [1]***.
2. When AT command is responded, it indicates the module is turned on successfully; or else the module fails to be turned on.

The other way to control the PWRKEY is through a button directly. While pressing the key, electrostatic strike may generate from the finger, and thus, a TVS component is indispensable to be placed nearby the button for ESD protection. For the best performance, the TVS component must be placed nearby the button. A reference circuit is shown in the following figure.

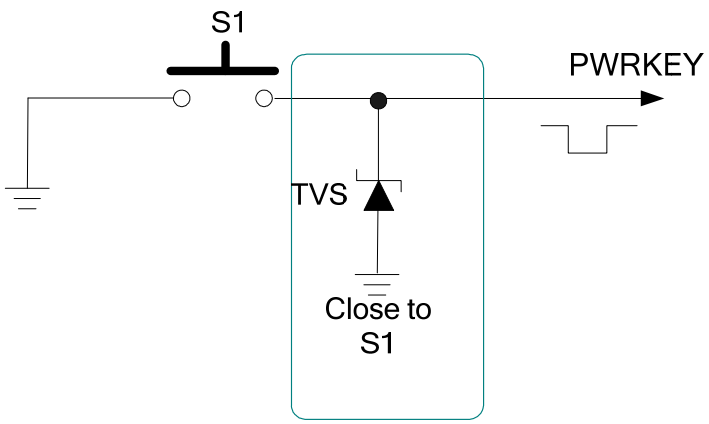

Figure 12: Turn on the Module with a Button

Command **AT+QGNSSC=1** should be sent to enable the GNSS power supply after the GSM part is running. When the GNSS_VCC is valid, the GNSS will enter into full on mode automatically. The turn-on timing is illustrated in the following figure.

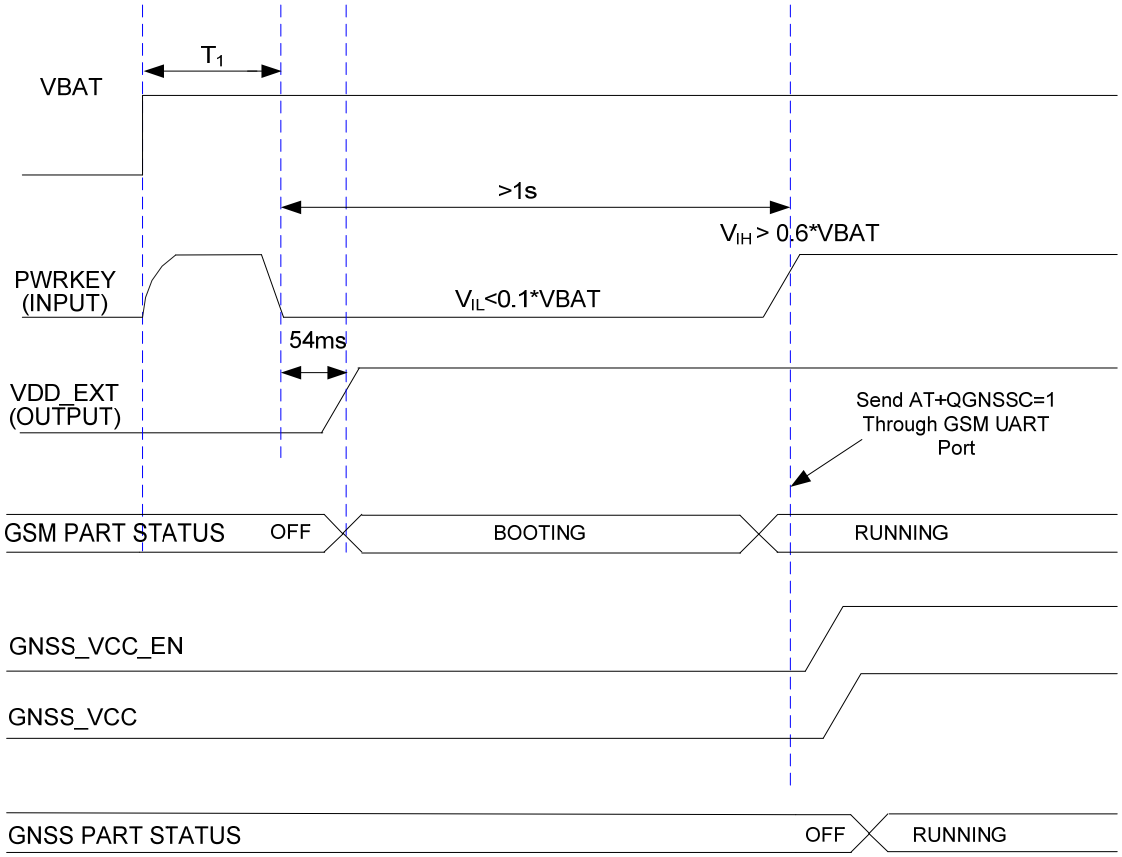

Figure 13: Turn-on Timing

NOTE

Make sure that VBAT is stable before pulling down PWRKEY pin. The time of T_1 is recommended to be 100ms.

3.5.2. Power down

The following procedures can be used to turn off the module:

- Normal power down procedure: Turn off module using the PWRKEY pin
- Normal power down procedure: Turn off module using command **AT+QPOWD**
- Under-voltage automatic shutdown: Take effect when under-voltage is detected.

3.5.2.1. Power down Module Using the PWRKEY Pin

It is a safe way to turn off the module by driving the PWRKEY to a low level voltage for a certain time. The power down scenario is illustrated in the following figure.

The power down procedure causes the module to log off from the network and allows the firmware to save important data before completely disconnecting the power supply.

Before the completion of the power down procedure, the module sends out the result code shown below:

NORMAL POWER DOWN

NOTES

1. When unsolicited result codes do not appear when autobauding is active and DTE & DCE are not correctly synchronized after start-up, the module is recommended to be set to a fixed baud rate.
2. As network logout time is related to the local mobile network, it is recommended to delay about 12 seconds before disconnecting the power supply or restarting the module.

After that moment, no further AT commands can be executed. Then the module enters the power down mode.

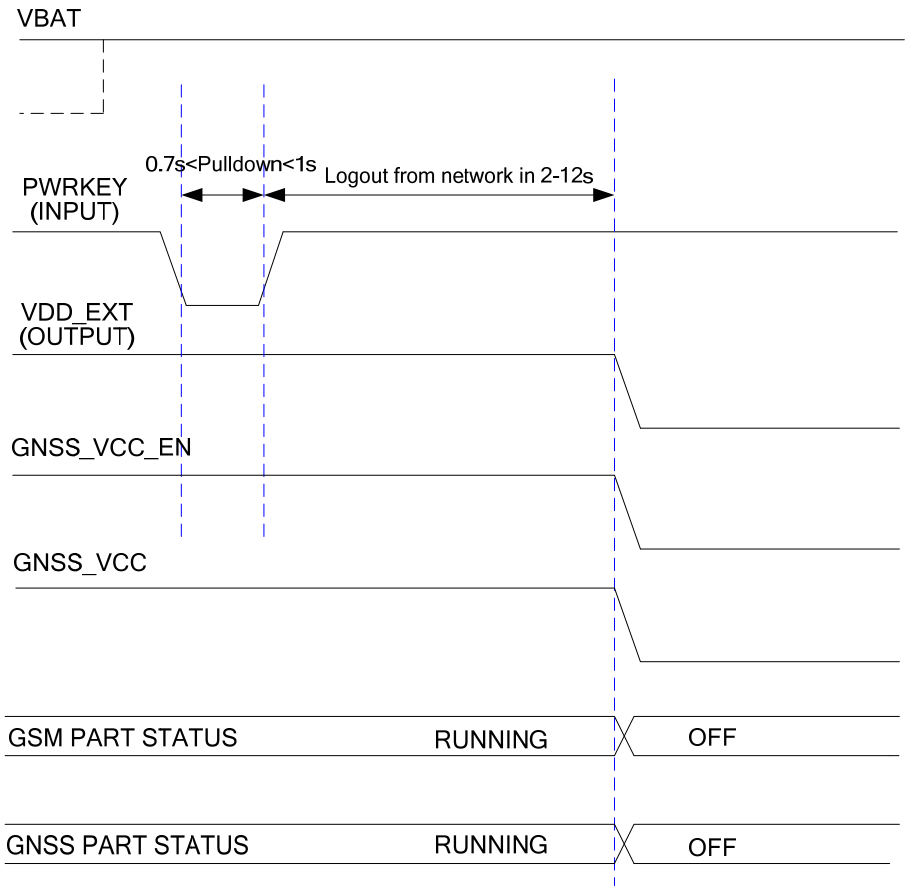

Figure 14: Turn-off Timing by Using the PWRKEY Pin

3.5.2.2. Power down Module Using AT Command

It is also a safe way to turn off the module via AT command **AT+QPOWD=1**. This command will let the module log off from the network and allow the firmware to save important data before completely disconnecting the power supply.

Before the completion of the power down procedure, the module sends out the result code shown below:

NORMAL POWER DOWN

After that moment, no further AT commands can be executed. And then the module enters into the power down mode.

Please refer to ***document [1]*** for details about the AT command **AT+QPOWD**.

3.5.2.3. Power down GNSS Part Alone Using AT Command

It is a safe way to turn off the GNSS part alone via AT command **AT+QGNSSC=0**. The power down scenario for GNSS part is illustrated in the following figure.

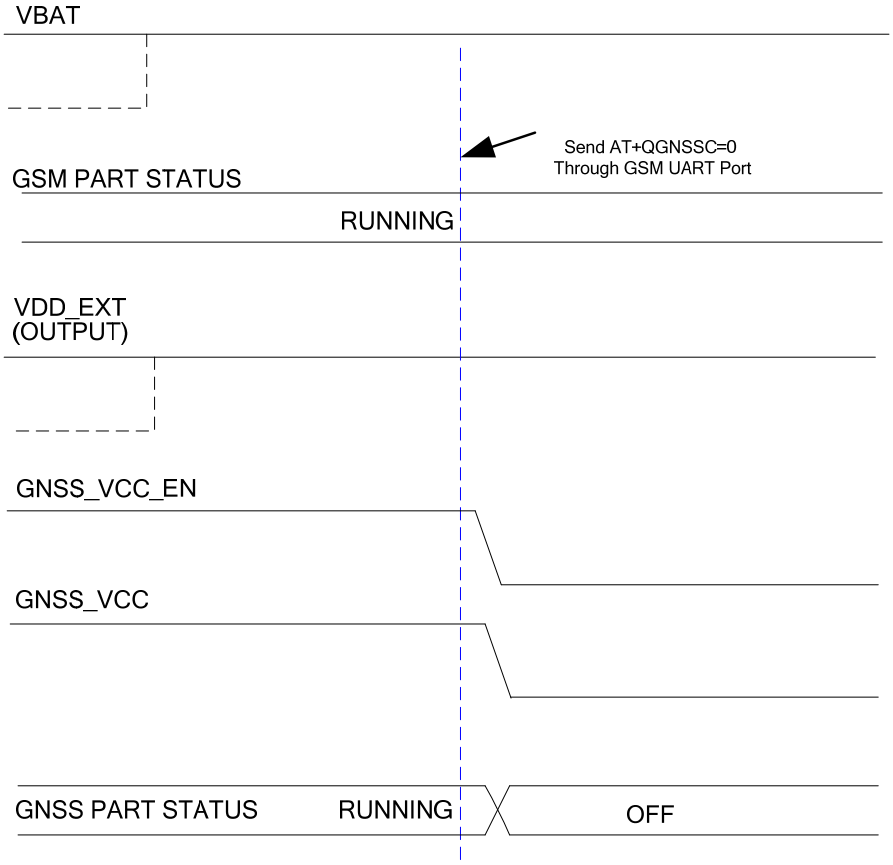

Figure 15: Turn-off Timing of GNSS Part by Using AT Command

3.5.2.4. Under-voltage Automatic Shutdown

The module will constantly monitor the voltage applied on the VBAT. If the voltage is ≤3.5V, the following URC will be presented:

UNDER_VOLTAGE WARNING

The normal input voltage range is from 3.3V to 4.6V. If the voltage is <3.3V, the module will automatically shut down.

If the voltage is <3.3V, the following URC will be presented:

UNDER_VOLTAGE POWER DOWN

After that moment, no further AT commands can be executed. The module logs off from network and enters into power down mode.

NOTE

When unsolicited result codes do not appear when autobauding is active and DTE & DCE are not correctly synchronized after start-up, the module is recommended to be set to a fixed baud rate.

3.6. Serial Interfaces

The module provides four serial ports: UART Port, Debug Port, Auxiliary UART Port and GNSS UART Port. The module is designed as DCE (Data Communication Equipment), following the traditional DCE-DTE (Data Terminal Equipment) connection. Autobauding function supports baud rate from 4800bps to 115200bps.

The UART Port:

- TXD: Send data to RXD of DTE.
- RXD: Receive data from TXD of DTE.
- RTS: Request to send.
- CTS: Clear to send.
- DTR: DTE is ready and inform DCE (this pin can wake the module up).
- RI: Ring indicator (when there is a call, SMS or URC output, the module will inform DTE with the RI pin).
- DCD: Data carrier detection (the validity of this pin demonstrates successful set-up of the communication link).

The Debug Port:

- DBG_TXD: Send data to the COM port of peripheral.
- DBG_RXD: Receive data from the COM port of peripheral.

The Auxiliary UART Port:

- In **all-in-one** solution:
  TXD_AUX: Send data to the GNSS part.
  RXD_AUX: Receive data from the GNSS part.

- In **stand-alone** solution:
  TXD_AUX: Keep open except during firmware upgrade.

RXD_AUX: Keep open except during firmware upgrade.

The GNSS UART Port

- In **all-in-one** solution:
  GNSS_TXD: Send data to the GSM part.
  GNSS_RXD: Receive data from the GSM part.

- In **stand-alone** solution:
  GNSS_TXD: Send GNSS data to the COM port of peripheral.
  GNSS_RXD: Receive GNSS data from the COM port of peripheral.

The logic levels are described in the following table.

Table 13: Logic Levels of the UART Interface

Parameter	Min.	Max.	Unit
V_{IL}	0	0.25×VDD_EXT	V
V_{IH}	0.75×VDD_EXT	VDD_EXT +0.2	V
V_{OL}	0	0.15×VDD_EXT	V
V_{OH}	0.85×VDD_EXT	VDD_EXT	V

Table 14: Pin Definition of the UART Interfaces

Interface	Pin Name	Pin No.	Description
UART Port	TXD	34	Transmit data
	RXD	33	Receive data
	DTR	37	Data terminal ready
	RI	35	Ring indication
	DCD	36	Data carrier detection
	CTS	38	Clear to send
	RTS	39	Request to send
Debug Port	DBG_RXD	30	Receive data

	DBG_TXD	29	Transmit data
Auxiliary UART Port[1)]	RXD_AUX[1)]	24	Receive data
	TXD_AUX[1)]	25	Transmit data
GNSS UART Port	GNSS_RXD	23	Receive data
	GNSS_TXD	22	Transmit data

NOTE

[1)] It is recommended to keep these pins open in **stand-alone** solution, except during firmware upgrade.

3.6.1. UART Port

3.6.1.1. Features of UART Port

- Seven lines on UART interface
- Contain data lines TXD and RXD, hardware flow control lines RTS and CTS, as well as other control lines DTR, DCD and RI.
- Used for AT command, GPRS data, etc. Multiplexing function is supported on the UART Port. NMEA output and PMTK command can be supported in **all-in-one** solution.
- Support the following communication baud rates:
  300, 600, 1200, 2400, 4800, 9600, 14400, 19200, 28800, 38400, 57600, 115200bps.
- The default setting is autobauding mode. Support the following baud rates for autobauding function: 4800, 9600, 19200, 38400, 57600, 115200bps.
- Hardware flow control is disabled by default. When hardware flow control is required, RTS and CTS should be connected to the host. AT command **AT+IFC=2,2** is used to enable hardware flow control. AT command **AT+IFC=0,0** is used to disable the hardware flow control. For more details, please refer to ***document [1]***.

After setting a fixed baud rate or autobauding, please send "**AT**" string at that rate. The UART port is ready when it responds "**OK**".

Autobauding allows the module to detect the baud rate by receiving the string "**AT**" or "**at**" from the host or PC automatically, which gives module flexibility without considering which baud rate is used by the host controller. Autobauding is enabled by default. To take advantage of the autobauding mode, special attention should be paid according to the following requirements:

Synchronization between DTE and DCE:

When DCE (the module) is powered on with autobauding enabled, it is recommended to wait 2 to 3 seconds before sending the first AT character. After receiving the "**OK**" response, DTE and DCE are correctly synchronized.

If the host controller needs URC in the mode of autobauding, it must be synchronized firstly. Otherwise the URC will be discarded.

Restrictions on autobauding operation:

- The UART port has to be operated at 8 data bits, no parity and 1 stop bit (factory setting).
- The "**At**" and "**aT**" commands cannot be used.
- Only the strings "**AT**" or "**at**" can be detected (neither "**At**" nor "**aT**").
- The Unsolicited Result Codes like **RDY**, **+CFUN: 1** and **+CPIN: READY** will not be indicated when the module is turned on with autobauding enabled and not be synchronized.
- Any other Unsolicited Result Codes will be sent at the previous baud rate before the module detects the new baud rate by receiving the first "**AT**" or "**at**" string. The DTE may receive unknown characters after switching to a new baud rate.
- It is not recommended to switch to autobauding from a fixed baud rate.
- If autobauding is active it is not recommended to switch to multiplex mode.

NOTE

To assure reliable communication and avoid any problems caused by undetermined baud rate between DCE and DTE, it is strongly recommended to configure a fixed baud rate and save it instead of using autobauding after start-up. For more details, please refer to the Section **AT+IPR** in ***document [1]***.

3.6.1.2. The Connection of UART

The connection between module and host using UART Port is very flexible. Three connection styles are illustrated as below.

A reference design for Full-Function UART connection is shown as below when it is applied in modulation-demodulation.

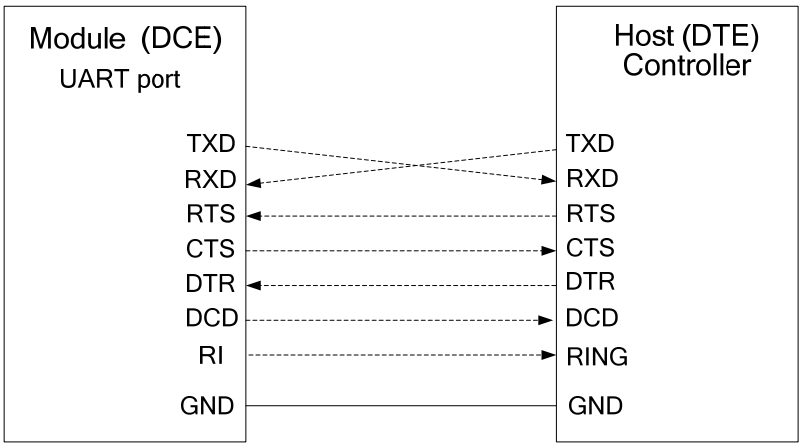

Figure 16: Reference Design for Full-Function UART

Three-line connection is shown as below.

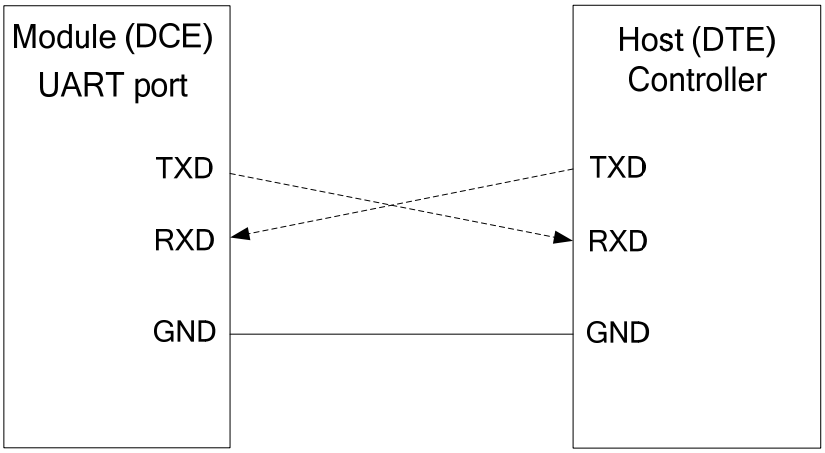

Figure 17: Reference Design for UART Port (Three Line Connection)

A reference design for UART Port with hardware flow control is shown as below. The connection will enhance the reliability of the mass data communication.

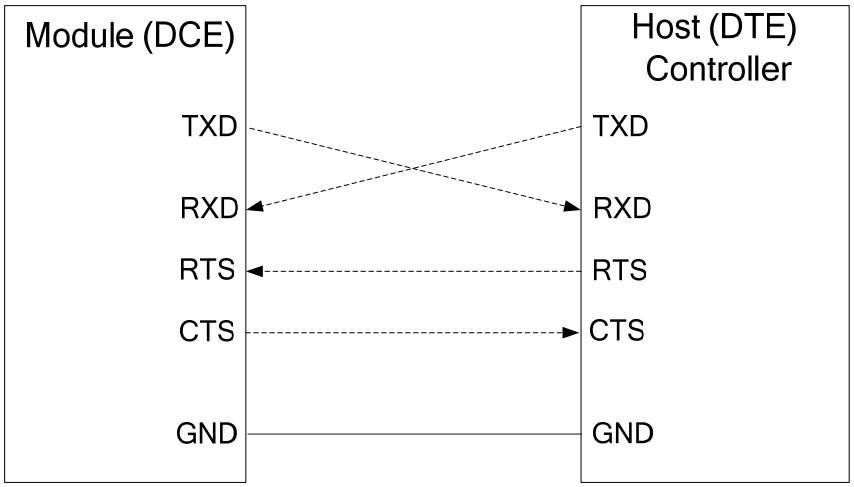

Figure 18: Reference Design for UART Port with Hardware Flow Control

3.6.1.3. Firmware Upgrade

TXD and RXD can be used for firmware upgrade in both **all-in-one** solution and **stand-alone** solution. The PWRKEY pin must be pulled down before firmware upgrade. A reference circuit is shown as below:

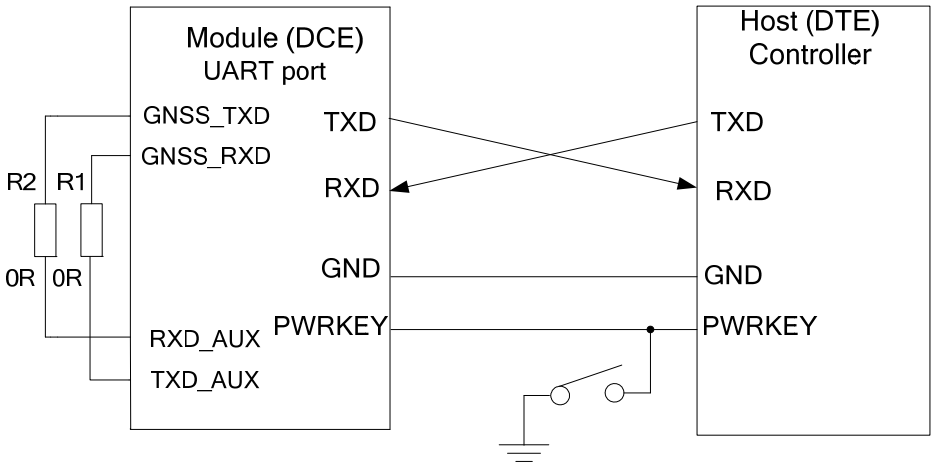

Figure 19: Reference Design for Firmware Upgrade

NOTES

1. In **stand-alone** solution, make sure the Auxiliary UART Port is connected to the GNSS UART Port during firmware upgrade. Please refer to ***Chapter 3.6.3.2*** for details.
2. The firmware of module might need to be upgraded due to a certain reasons. It is thus recommended to reserve these pins in the host board for firmware upgrade.

3.6.2. Debug Port

- Two lines: DBG_TXD and DBG_RXD.
- The port outputs log information automatically.
- Debug Port is only used for firmware debugging and its baud rate must be configured as 460800bps.

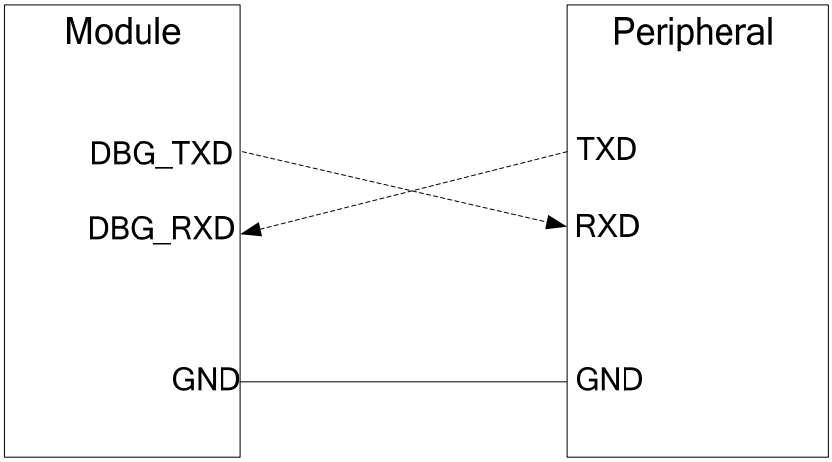

Figure 20: Reference Design for Debug Port

3.6.3. Auxiliary UART Port and GNSS UART Port

3.6.3.1. Connection in All-in-one Solution

In **all-in-one** solution, the Auxiliary UART Port and GNSS UART Port should be connected together, thus allowing for communication between GSM and GNSS parts. A reference design is shown below.

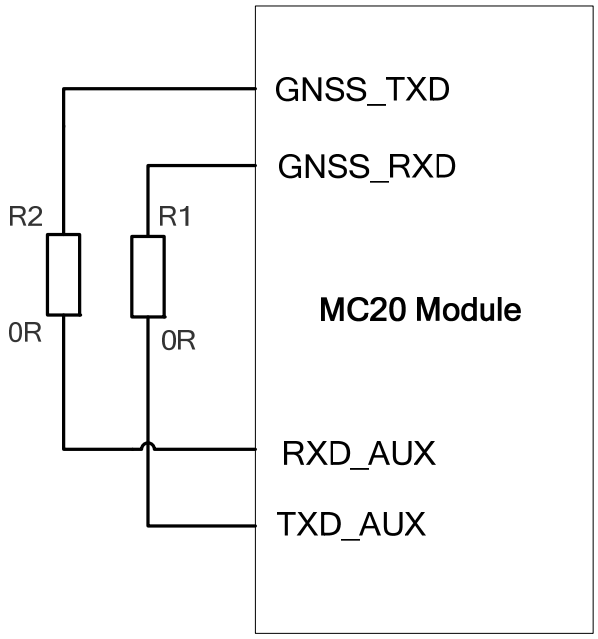

Figure 21: Auxiliary and GNSS UART Port Connection in All-in-one Solution

NOTE

As the GNSS part of MC20 module outputs more data than a single GNSS system, the default output NMEA types running in 4800bps baud rate and 1Hz update rate will lose some data. The solution to avoid losing data in 4800bps baud rate and 1Hz update rate is to decrease the output NMEA types. 115200bps baud rate is enough to transmit GNSS NMEA in default settings and it is thus recommended.

3.6.3.2. Connection in Stand-alone Solution

In **stand-alone** solution, the GNSS UART Port is connected to the COM port of peripheral. During firmware upgrade, switch S1 should be kept closed. Otherwise, it should be kept open. A reference design is shown below.

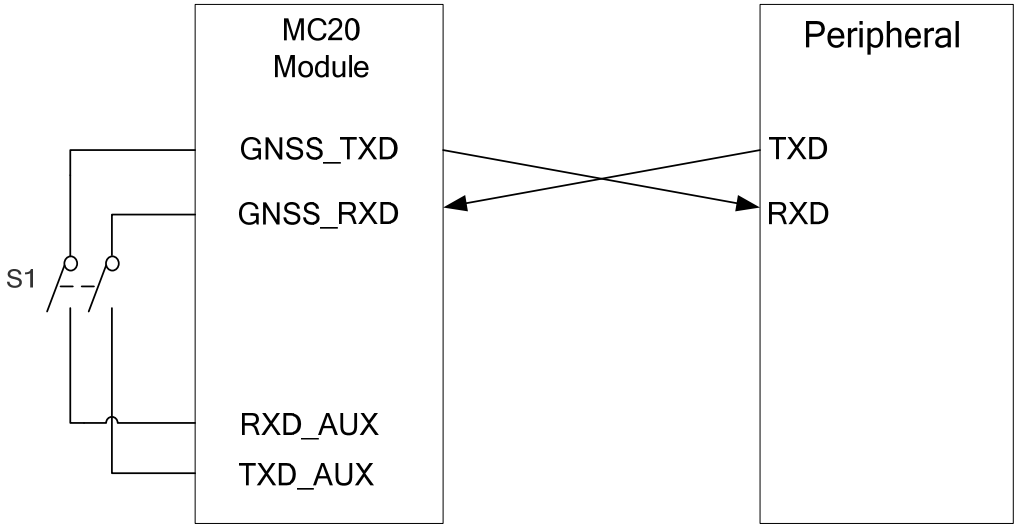

Figure 22: Auxiliary and GNSS UART Port Connection in Stand-alone Solution

3.6.4. UART Application

A reference design of 3.3V level match is shown as below. If the host is a 3V system, please change the 5.6K resistors to 10K ones.

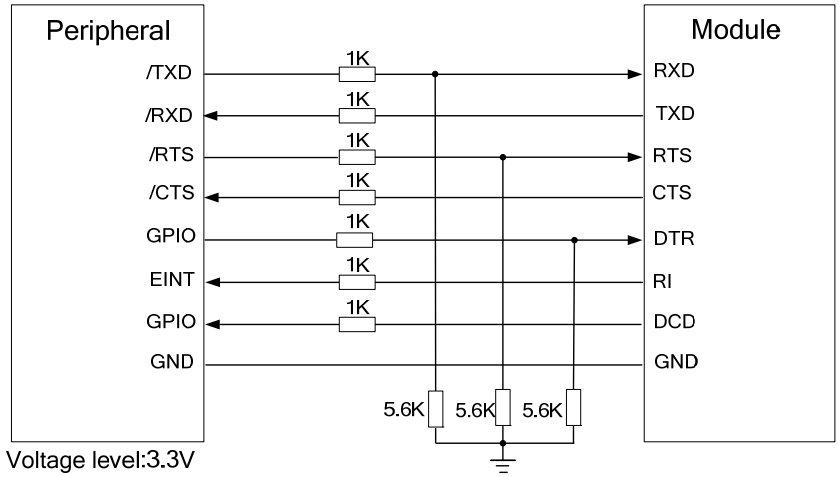

Figure 23: Level Match Design for 3.3V System

NOTE

It is highly recommended to add the resistor divider circuit on the UART signal lines when the host's level is 3V or 3.3V. For a higher voltage level system, a level shifter IC could be used between the host and the module. For more details about UART circuit design, please refer to ***document [13]***.

The following figure shows a sketch map between the module and the standard RS-232 interface. As the electrical level of module is 2.8V, a RS-232 level shifter must be used. Note that you should assure the I/O voltage of level shifter which connects to module is 2.8V.

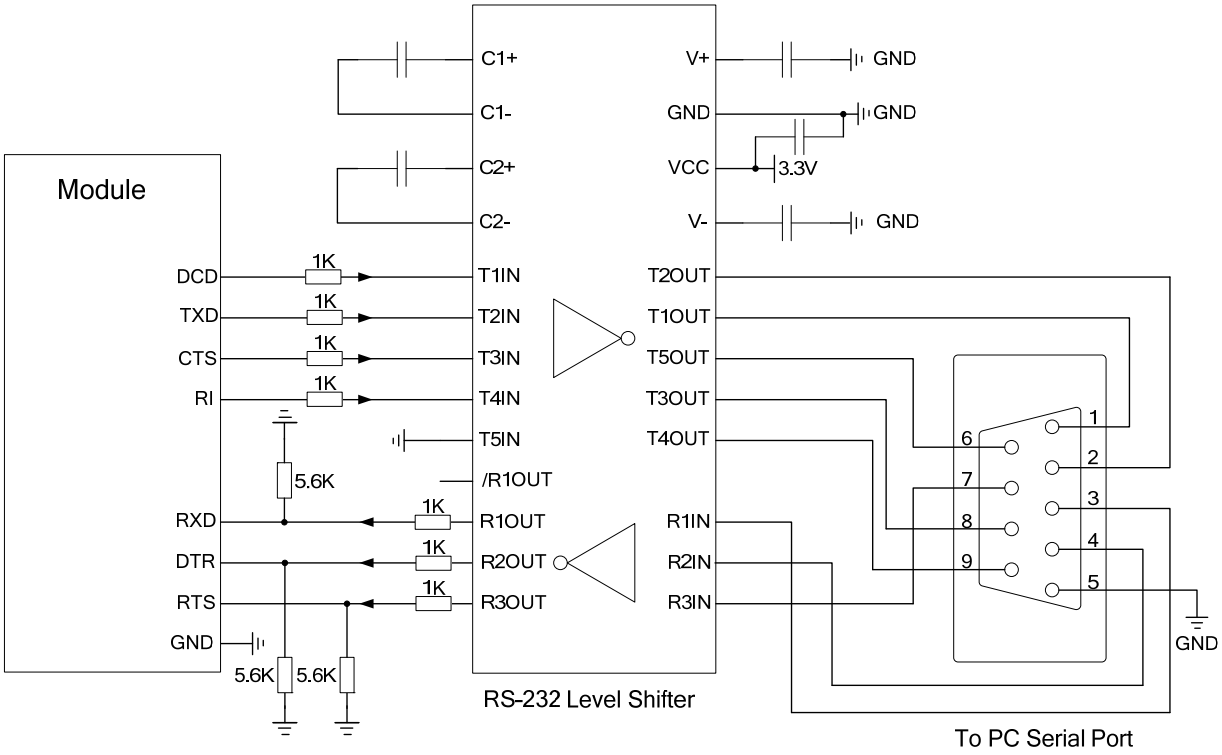

Figure 24: Sketch Map for RS-232 Interface Match

Please visit vendors' websites to select a suitable IC, such as: http://www.maximintegrated.com and http://www.exar.com/.

3.7. Audio Interfaces

The module provides one analog input channel and two analog output channels.

Table 15: Pin Definition of Audio Interface

Interface	Pin Name	Pin No.	Description
AIN/AOUT1	MICP	1	Microphone positive input
	MICN	2	Microphone negative input

	SPKP	3	Channel 1 Audio positive output
	SPKN	4	Channel 1 Audio negative output
AIN/AOUT2	MICP	1	Microphone positive input
	MICN	2	Microphone negative input
	LOUDSPKP	54	Channel 2 Audio positive output
	LOUDSPKN	53	Channel 2 Audio negative output

AIN can be used for input of microphone and line. An electret microphone is usually used. AIN are differential input channels.

AOUT1 is used for output of receiver. The channel is typically used for building a receiver into a handset. AOUT1 channel is a differential channel.

AOUT2 is used for loudspeaker output as it is embedded with an amplifier of class AB whose maximum drive power is 800mW. AOUT2 is a differential channel.

AOUT2 also can be used for output of earphone, and can be used as a single-ended channel.

All these audio channels support voice and ringtone output, and so on, and can be switched by **AT+QAUDCH** command. For more details, please refer to ***document [1]***.

Use AT command **AT+QAUDCH** to select audio channel:

- 0--AIN/AOUT1, the default value is 0.
- 1--AIN/AOUT2, this channel is always used for earphone.
- 2--AIN/AOUT2, this channel is always used for loudspeaker.

For each channel, you can use **AT+QMIC** to adjust the input gain level of microphone. You can also use **AT+CLVL** to adjust the output gain level of receiver and speaker. **AT+QSIDET** is used to set the side-tone gain level. For more details, please refer to ***document [1]***.

Table 16: AOUT2 Output Characteristics

Item	Condition	Min.	Typ.	Max.	Unit
RMS Power	8ohm load VBAT=3.7v THD+N=1%		800		mW

3.7.1. Decrease TDD Noise and Other Noises

The 33pF capacitor is applied for filtering out 900MHz RF interference when the module is transmitting at EGSM900MHz. Without placing this capacitor, TDD noise could be heard. Moreover, the 10pF capacitor here is used for filtering out 1800MHz RF interference. However, the resonant frequency point of a capacitor largely depends on the material and production technique. Therefore, customers would have to discuss with their capacitor vendors to choose the most suitable capacitor for filtering out GSM850MHz, EGSM900MHz, DCS1800MHz and PCS1900MHz separately.

The severity degree of the RF interference in the voice channel during GSM transmitting period largely depends on the application design. In some cases, EGSM900 TDD noise is more severe; while in other cases, DCS1800 TDD noise is more obvious. Therefore, you can have a choice based on test results. Sometimes, even no RF filtering capacitor is required.

The capacitor which is used for filtering out RF noise should be close to the audio interface. Audio alignment should be as short as possible.

In order to decrease radio or other signal interference, the position of RF antenna should be kept away from audio interface and audio alignment. Power alignment and audio alignment should not be parallel, and power alignment should be far away from audio alignment.

The differential audio traces must be routed according to the differential signal layout rule.

3.7.2. Microphone Interfaces Design

AIN channels come with internal bias supply for external electret microphone. A reference circuit is shown in the following figure.

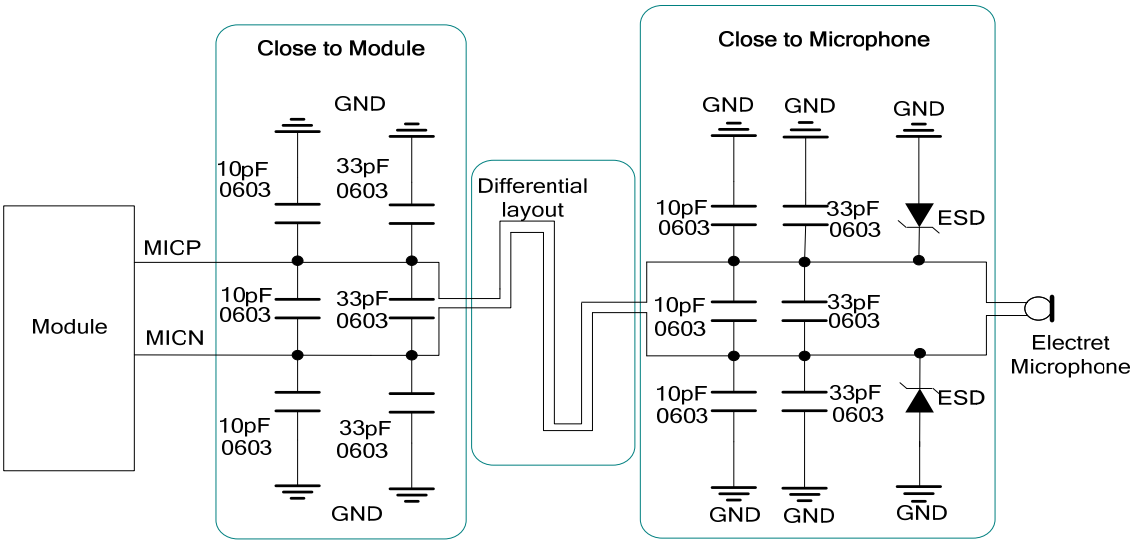

Figure 25: Reference Design for AIN

3.7.3. Receiver and Speaker Interface Design

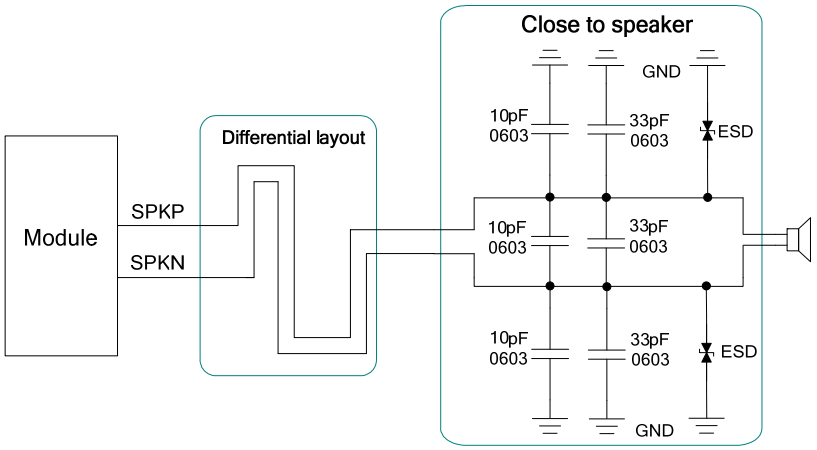

Figure 26: Handset Interface Design for AOUT1

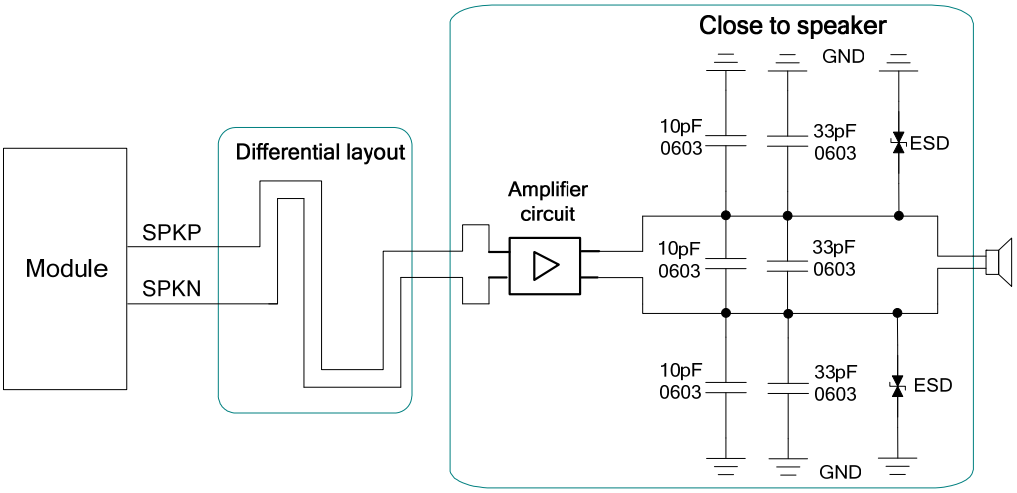

Figure 27: Speaker Interface Design with an Amplifier for AOUT1

A suitable differential audio amplifier can be chosen from the Texas Instrument's website (http://www.ti.com/). There are also other excellent audio amplifier vendors in the market.

3.7.4. Earphone Interface Design

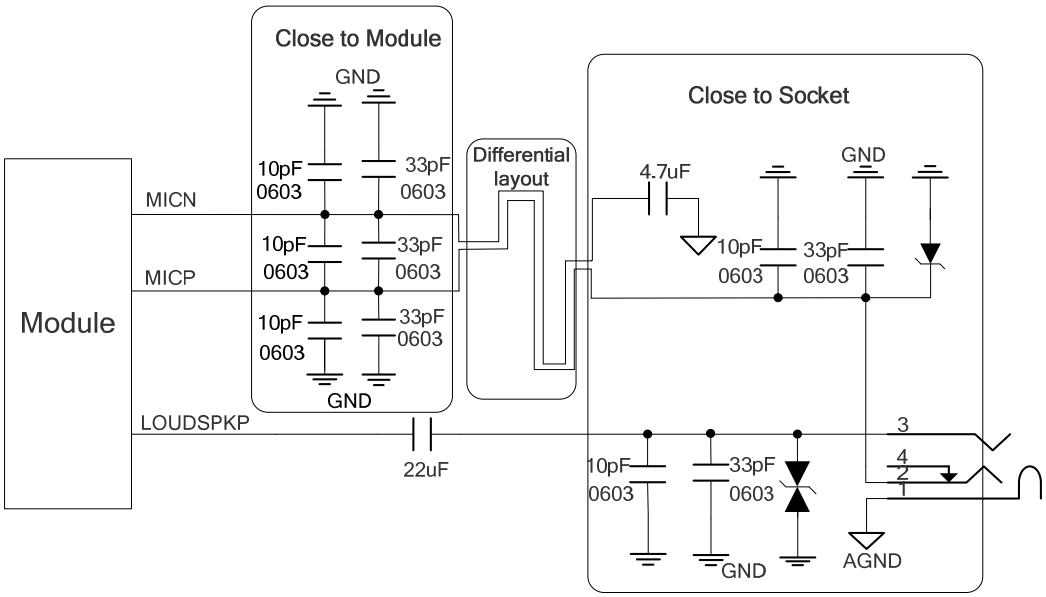

Figure 28: Earphone Interface Design

3.7.5. Loud Speaker Interface Design

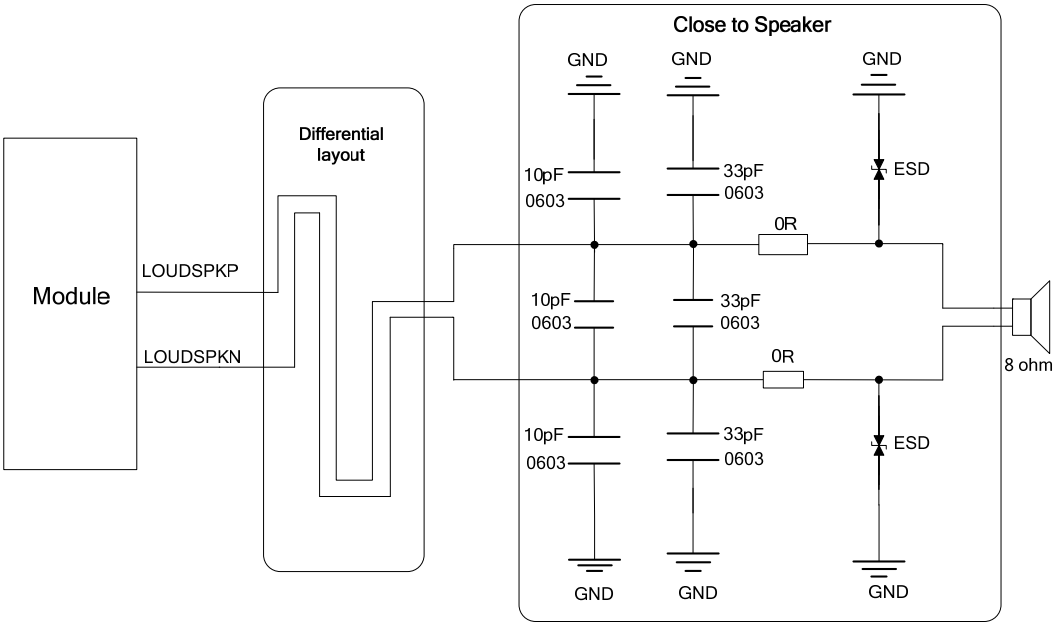

Figure 29: Loud Speaker Interface Design

3.7.6. Audio Characteristics

Table 17: Typical Electret Microphone Characteristics

Parameter	Min.	Typ.	Max.	Unit
Working Voltage	1.2	1.5	2.0	V
Working Current	200		500	uA
External Microphone Load Resistance		2.2		K Ohm

Table 18: Typical Speaker Characteristics

Parameter			Min.	Typ.	Max.	Unit
AOUT1 Output	Single-ended	Load resistance		32		Ohm
		Reference level	0		2.4	Vpp
	Differential	Load resistance		32		Ohm
		Reference level	0		4.8	Vpp
AOUT2 Output	Differential	Load resistance		8		Ohm
		Reference level	0		2×VBAT	Vpp
	Single-ended	Load resistance		8		Ohm
		Reference level	0		VBAT	Vpp

3.8. SIM Card Interface

The SIM interface supports the functionality of the GSM Phase 1 specification and also the functionality of the new GSM Phase 2+ specification for FAST 64 kbps SIM card (intended for use with a SIM application tool-kit.

The SIM interface is powered by an internal regulator in the module. Both 1.8V and 3.0V SIM cards are supported, and Dual SIM Single Standby function is supported.

Table 19: Pin Definition of the SIM Interface

Pin Name	Pin No.	Description	Alternate Function[1)]
SIM1_VDD	18	Supply power for SIM card. Automatic detection of SIM1 card voltage. 3.0V±5% and 1.8V±5%. Maximum supply current is around 10mA.	
SIM1_CLK	19	SIM1 card clock.	
SIM1_DATA	21	SIM1 card data I/O.	
SIM1_RST	20	SIM1 card reset.	
SIM1_PRESENCE	37	SIM1 card detection.	DTR
SIM_GND	16	SIM card ground.	
SIM2_VDD	13	Supply power for SIM card. Automatic detection of SIM2 card voltage. 3.0V±5% and 1.8V±5%. Maximum supply current is around 10mA.	
SIM2_CLK	10	SIM2 card clock.	
SIM2_DATA	11	SIM2 card data I/O.	
SIM2_RST	12	SIM2 card reset.	

NOTE

[1)] If several interfaces share the same I/O pin, to avoid conflict between these alternate functions, only one peripheral should be enabled at a time.

The following figure is a reference design for SIM1 interface with an 8-pin SIM card holder.

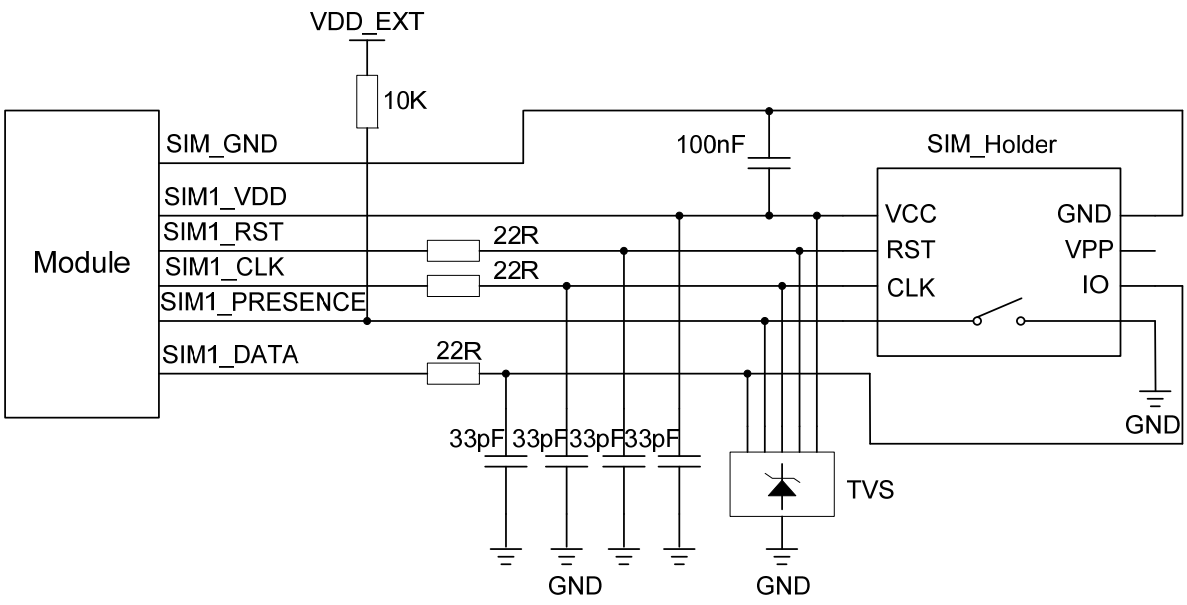

Figure 30: Reference Circuit for SIM1 Interface with an 8-pin SIM Card Holder

If SIM1 card detection function is not used, keep SIM1_PRESENCE pin open. A reference circuit for a 6-pin SIM card socket is shown in the following figure.

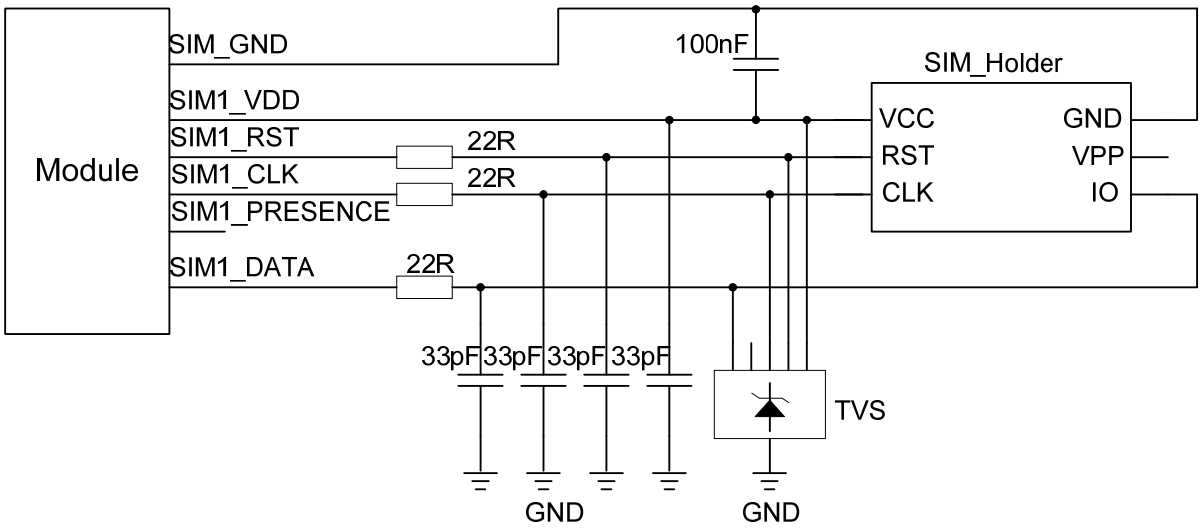

Figure 31: Reference Circuit for SIM1 Interface with a 6-pin SIM Card Holder

The following figure is a reference design for SIM2 interface with a 6-pin SIM card holder.

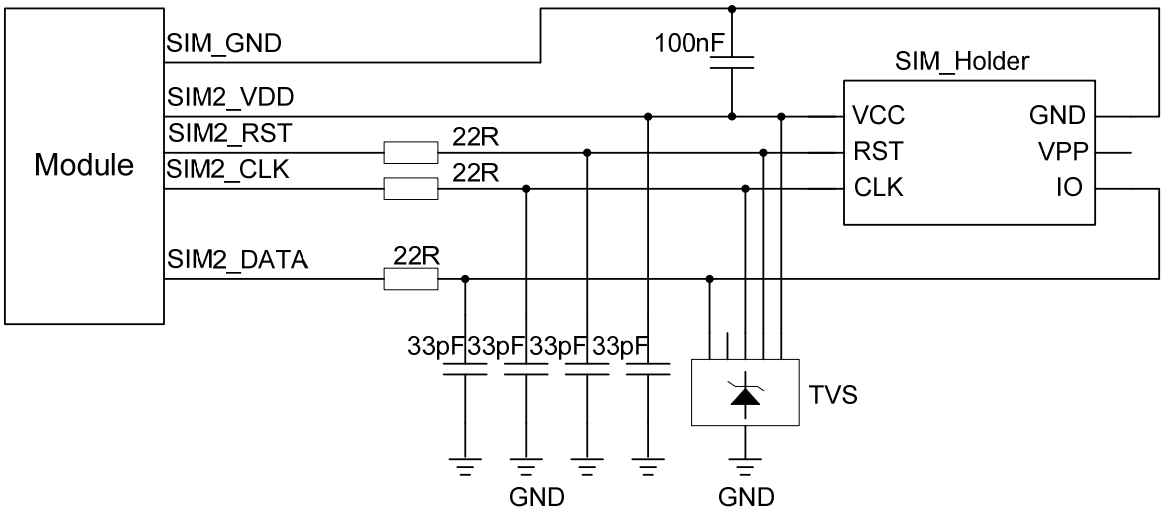

Figure 32: Reference Circuit for SIM2 Interface with a 6-pin SIM Card Holder

For more information of SIM card holder, you can visit http://www.amphenol.com/ and http://www.molex.com/.

In order to enhance the reliability and availability of the SIM card in application, please conform to the following criteria in the SIM circuit design:

- Keep layout of SIM card as close to the module as possible. Assure the trace length is less than 200mm.
- Keep SIM card signal away from RF and VBAT alignment.
- Assure the ground between module and SIM holder short and wide. Keep the width of ground no less than 0.5mm to maintain the same electric potential. The decouple capacitor of SIM_VDD is less than 1uF and must be near to SIM holder.
- To avoid cross talk between SIM_DATA and SIM_CLK, keep them away from each other and shield them with surrounded ground.
- In order to offer good ESD protection, it is recommended to add a TVS diode array. For more information of TVS diode, please visit http://www.onsemi.com/. The most important rule is to place the ESD protection device close to the SIM card socket and make sure the nets being protected will go through the ESD device first and then lead to module. The 22Ω resistors should be connected in series between the module and the SIM card so as to suppress the EMI spurious transmission and enhance the ESD protection. Please note that the SIM peripheral circuit should be close to the SIM card socket.
- Place the RF bypass capacitors (33pF) close to the SIM card on all signals lines to improve EMI suppression performance.

3.9. ADC

The module provides an ADC channel to measure the value of voltage. Please give priority to the use of ADC0 channel. Command **AT+QADC** can read the voltage value applied on ADC0 pin. For details of this AT command, please refer to ***document [1]*.** In order to improve the accuracy of ADC, the layout of ADC should be surrounded by ground.

Table 20: Pin Definition of the ADC

Pin Name	Pin No.	Description
ADC	6	Analog to digital converter.

Table 21: Characteristics of the ADC

Item	Min.	Typ.	Max.	Unit
Voltage Range	0		2.8	V
ADC Resolution		10		bits
ADC Accuracy		2.7		mV

3.10. Behaviors of the RI

Table 22: Behaviors of the RI

State	RI Response
Standby	HIGH
Voice Call	Change to LOW, and then: 1. Change to HIGH when call is established. 2. Change to HIGH when use ATH to hang up the call 3. Change to HIGH first when calling part hangs up and then change to LOW for 120ms indicating “NO CARRIER” as an URC. After that, RI changes to HIGH again. 4. Change to HIGH when SMS is received.
SMS	When a new SMS comes, the RI changes to LOW and holds low level for about 120ms, and then changes to HIGH.

URC	Certain URCs can trigger 120ms low level on RI. For more details, please refer to ***document [1]***

If the module is used as a caller, the RI would maintain high except when the URC or SMS is received. When it is used as a receiver, the timing of RI is shown below.

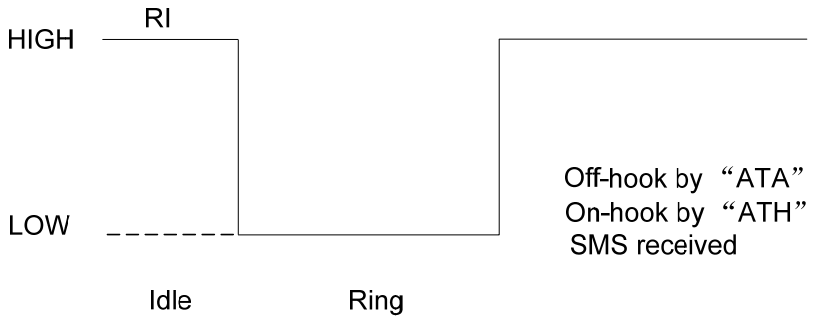

Figure 33: RI Behavior as a Receiver When Voice Calling

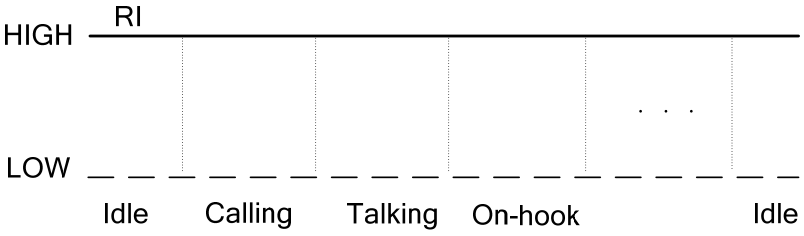

Figure 34: RI Behavior as a Caller

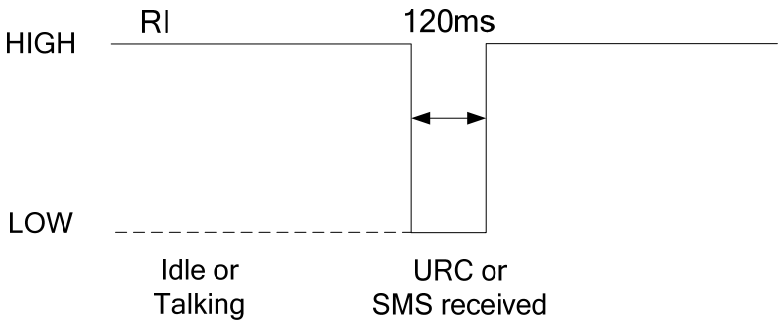

Figure 35: RI Behavior When URC or SMS Received

3.11. Network Status Indication

The NETLIGHT signal can be used to drive a network status indicator LED. The working state of this pin is listed in the following table.

Table 23: Working State of the NETLIGHT

State	Module Function
Off	The module is not running.
64ms On/800ms Off	The module is not synchronized with network.
64ms On/2000ms Off	The module is synchronized with network.
64ms On/600ms Off	GPRS data transmission after dialing the PPP connection.

A reference circuit is shown as below.

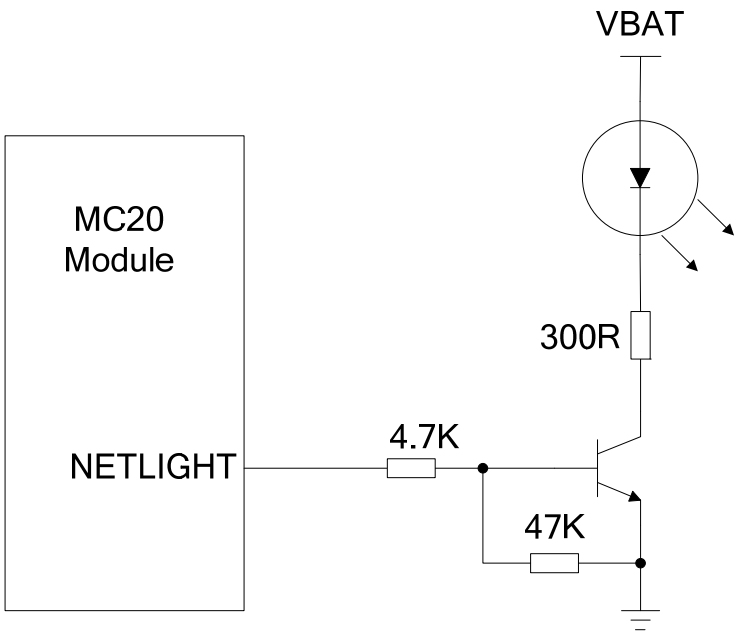

Figure 36: Reference Design for NETLIGHT

3.12. EASY Autonomous AGPS Technology

Supplying aiding information like ephemeris, almanac, rough last position, time and satellite status, can help improve the acquisition sensitivity and the TTFF for a module. This is called as EASY technology and MC20's GNSS part supports it.

EASY technology works as embedded software which can accelerate TTFF by predicting satellite navigation messages from received ephemeris. The GNSS part will calculate and predict orbit information automatically up to 3 days after first receiving the broadcast ephemeris, and save the predicted information into the internal memory. GNSS part of MC20 will use the information for positioning if no enough information from satellites, so the function is helpful for positioning and TTFF improvement.

The EASY function can reduce TTFF to 5s in warm start. In this case, GNSS's backup domain should be valid. In order to gain enough broadcast ephemeris information from GNSS satellites, the GNSS part should receive the information for at least 5 minutes in good signal conditions after it fixes the position.

EASY function is enabled by default. Command "$PMTK869,1,0*34" can be used to disable EASY function. For more details, please refer to ***document [2].***

NOTE

In **all-in-one** solution, make sure the GNSS part is powered on before sending the PMTK command.

3.13. EPO Offline AGPS Technology

MC20 module features a function called EPO (Extended Prediction Orbit) which is a world leading technology. When MC20 module is powered on, EPO function can be enabled via AT command **AT+QGNSSEPO=1**. When the GSM part detected that the EPO data has expired, the EPO data will be automatically downloaded to the GSM part's FS from MTK server via GSM/GPRS network; and the GNSS part will get the EPO data via build-in GNSS command from GSM's FS when it detected that the local EPO data has expired. When there is no local EPO data or when the data has expired, MC20 module will download the data (4KB) for 6 hours' orbit predictions in order to achieve cold start in the shortest time, and then continue to download the EPO data (48KB) for 3 days. The technology allows the module to realize fast positioning. Command **AT+QGNSSEPO=0** can turn off the EPO function.

NOTE

Make sure the EPO function is enabled if you need to download the EPO data.

3.14. Multi-tone AIC

MC20 module has a function called multi-tone AIC (Active Interference Cancellation) to decease harmonic of RF noise from Wi-Fi, GSM, 3G and 4G.

Up to 12 multi-tone AIC embedded in the module can provide effective narrow-band interference and jamming elimination. The GNSS signal could be demodulated from the jammed signal, which can ensure better navigation quality. AIC function is enabled by default. Enabling AIC function will increase current consumption by about 1mA @VCC=3.3V. The following commands can be used to set AIC function.

Enable AIC function: $PMTK 286,1*23
Disable AIC function: $PMTK 286,0*22

NOTE

In **all-in-one** solution, make sure the GNSS part is powered on before sending these PMTK commands.

4 Antenna Interface

MC20 has three antenna interfaces which are used for GSM antenna, GNSS antenna and BT antenna, respectively. The Pin 41 is the GSM antenna pad; the Pin 15 is the GNSS antenna pad; and Pin 32 is the BT antenna pad. The RF interface of the three antenna pads has an impedance of 50Ω.

4.1. GSM Antenna Interface

There is a GSM antenna pad named RF_ANT for MC20.

Table 24: Pin Definition of the RF_ANT

Pin Name	Pin No.	Description
GND	40	Ground
RF_ANT	41	GSM antenna pad
GND	42	Ground

4.1.1. Reference Design

The external antenna must be matched properly to achieve the best performance; so the matching circuit is necessary. A reference design for GSM antenna is shown below.

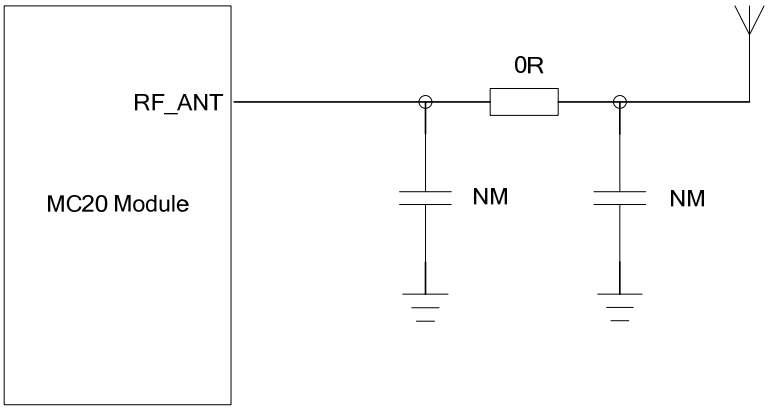

Figure 37: Reference Design for GSM Antenna

MC20 provides an RF antenna pad for antenna connection. The RF trace in host PCB connected to the module's RF antenna pad should be coplanar waveguide line or microstrip line, whose characteristic impedance should be close to 50Ω. MC20 comes with grounding pads which are next to the antenna pad in order to give a better grounding. Besides, a π type matching circuit is suggested to be used to adjust the RF performance.

To minimize the loss on RF trace and RF cable, please pay attention to the design. The following table shows the requirement on GSM antenna.

Table 25: Antenna Cable Requirements

Type	Requirements
GSM850/EGSM900	Cable insertion loss <1dB
DCS1800/PCS1900	Cable insertion loss <1.5dB

Table 26: Antenna Requirements

Type	Requirements
Frequency Range	Depend on the frequency band(s) provided by the network operator
VSWR	≤ 2
Gain (dBi)	1
Max. Input Power (W)	50
Input Impedance (Ω)	50
Polarization Type	Vertical

4.1.2. RF Output Power

Table 27: RF Output Power

Frequency	Max.	Min.
GSM850	33dBm±2dB	5dBm±5dB
EGSM900	33dBm±2dB	5dBm±5dB
DCS1800	30dBm±2dB	0dBm±5dB

PCS1900	30dBm±2dB	0dBm±5dB

NOTE

In GPRS 4 slots TX mode, the maximum output power is reduced by 2.5dB. This design conforms to the GSM specification as described in section ***13.16*** of ***3GPP TS 51.010-1***.

4.1.3. RF Receiving Sensitivity

Table 28: RF Receiving Sensitivity

Frequency	Receive Sensitivity
GSM850	< -110dBm
EGSM900	< -110dBm
DCS1800	< -110dBm
PCS1900	< -110dBm

4.1.4. Operating Frequencies

Table 29: Operating Frequencies

Frequency	Receive	Transmit	ARFCH
GSM850	869~894MHz	824~849MHz	128~251
EGSM900	925~960MHz	880~915MHz	0~124, 975~1023
DCS1800	1805~1880MHz	1710~1785MHz	512~885
PCS1900	1930~1990MHz	1850~1910MHz	512~810

4.1.5. RF Cable Soldering

Soldering the RF cable to RF pad of module correctly will reduce the loss on the path of RF, please refer to the following example of RF soldering.

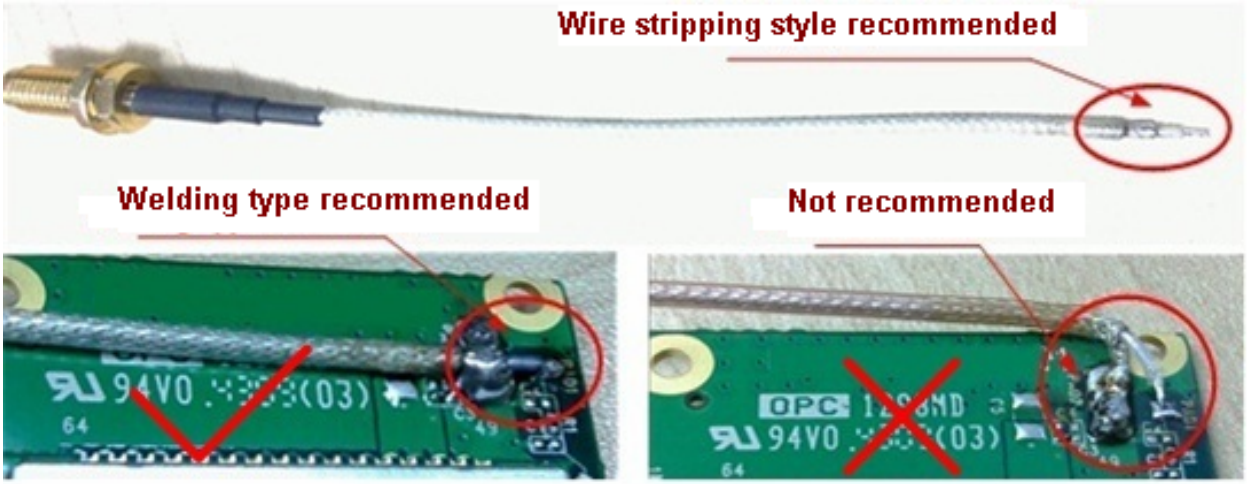

Figure 38: RF Soldering Sample

4.2. GNSS Antenna Interface

The GNSS part of MC20 module supports both GPS and BeiDou systems. The RF signal is obtained from the GNSS_ANT pin. The impedance of RF trace should be controlled as 50 Ohm, and the trace length should be kept as short as possible.

4.2.1. Antenna Specifications

The module can be connected to a dedicated GPS/BeiDou passive or active antenna to receive GPS/BeiDou satellite signals. The recommended antenna specifications are given in the following table.

Table 30: Recommended Antenna Specifications

Antenna Type	Specification
Passive Antenna	GPS frequency: 1575.42±2MHz BeiDou frequency: 1602±4MHz VSWR: <2 (Typ.) Polarization: RHCP or Linear Gain: >0dBi
Active Antenna	GPS frequency: 1575.42±2MHz BeiDou frequency:1602±4MHz VSWR: <2 (Typ.) Polarization: RHCP or Linear Noise figure: <1.5dB

	Gain (antenna): >-2dBi Gain (embedded LNA): 20dB (Typ.) Total gain: >18dBi (Typ.)

4.2.2. Active Antenna

The following figure is a typical reference design with active antenna. In this mode, the antenna is powered by GNSS_VCC.

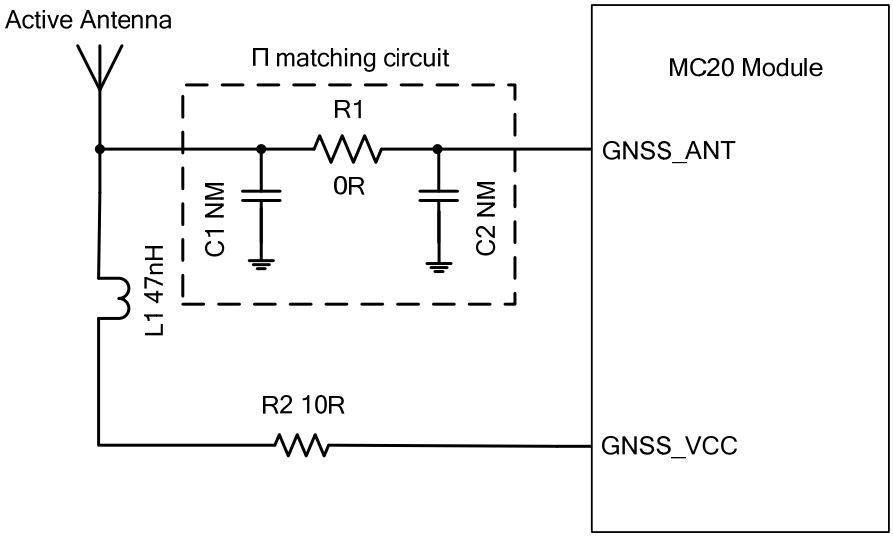

Figure 39: Reference Design with Active Antenna

C1, R1 and C2 are reserved matching circuit for antenna impedance modification. By default, C1 and C2 are not mounted; R1 is 0 ohm.

The external active antenna is powered by GNSS_VCC. The voltage ranges from 2.8V to 4.3V, and the typical value is 3.3V. If the voltage does not meet the requirements for powering the active antenna, an external LDO should be used.

The inductor L1 is used to prevent the RF signal from leaking into the GNSS_VCC pin and route the bias supply to the active antenna, and the recommended value of L1 is no less than 47nH. R2 can protect the whole circuit in case the active antenna is shorted to ground.

NOTE

In **all-in-one** solution, please note that the power supply of GNSS_VCC is controlled by the GSM part through AT command.

4.2.3. Passive Antenna

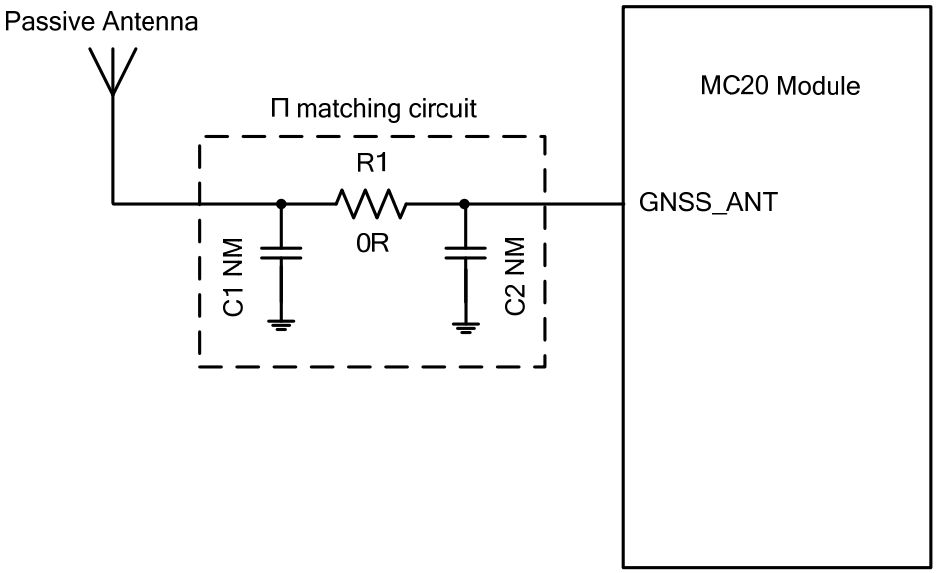

Figure 40: Reference Design with Passive Antenna

The above figure is a typical reference design with passive antenna.

C1, R1 and C2 are reserved matching circuit for antenna impedance modification. C1 and C2 are not mounted by default; R1 is 0 ohm. Impedance of RF trace should be controlled as 50 ohm and the trace length should be kept as short as possible.

4.3. Bluetooth Antenna Interface

MC20 provides a Bluetooth antenna interface. Bluetooth is a wireless technology that allows devices to communicate, or transmit data/voice, wirelessly over a short distance. It is described as a short-range communication technology intended to replace the cables connecting portable and/or fixed devices while maintaining high level of security. Bluetooth is standardized as IEEE802.15 and operates in the 2.4 GHz range using RF technology. Its data rate is up to 3Mbps.

MC20 is fully compliant with Bluetooth specification 3.0, and supports profiles including SPP and HFP-AG.

The module provides a Bluetooth antenna pad named BT_ANT, and the pin definition is listed below.

Table 31: Pin Definition of the BT_ANT

Pin Name	Pin No.	Description
BT_ANT	32	BT antenna pad
GND	31	Ground

The external antenna must be matched properly to achieve the best performance, so the matching circuit is necessary. The connection is recommended as in the following figure:

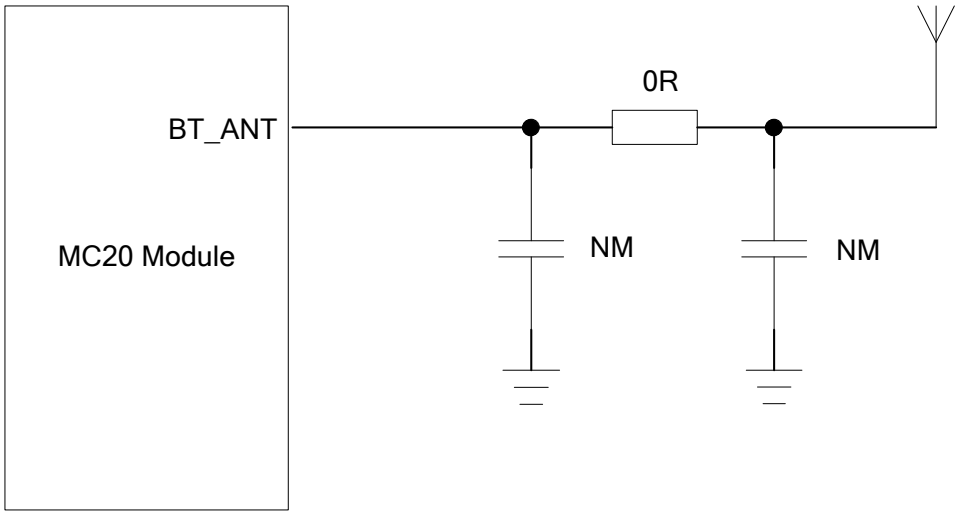

Figure 41: Reference Design for Bluetooth Antenna

There are some suggestions for component placement and RF trace layout for Bluetooth RF traces:

- Antenna matching circuit should be closed to the antenna;
- The impedance of RF trace should be controlled as 50Ω;
- The RF traces should be kept far away from the high frequency signals and strong disturbing source.

The proposed antenna type is Chip antenna,and the detailed description is as follows:

Table 32: Recommended Antenna Specifications

ITEM	SPECIFICATION
Type	Chip Antenna
Frequency Band	2.40GHz~2.50GHz

Peak Gain	3 dBi Typ
Impedance	50Ω Typ

5 Electrical, Reliability and Radio Characteristics

5.1. Absolute Maximum Ratings

Absolute maximum ratings for power supply and voltage on digital and analog pins of the module are listed in the following table:

Table 33: Absolute Maximum Ratings

Parameter	Min.	Max.	Unit
VBAT	-0.3	+4.73	V
GNSS_VCC	-0.3	+4.5	V
Peak Current of Power Supply (VBAT)	0	2	A
RMS Current of Power Supply (VBAT, during one TDMA-frame)	0	0.7	A
Voltage at Digital Pins	-0.3	3.08	V
Voltage at Analog Pins	-0.3	3.08	V
Voltage at Digital/analog Pins in Power Down Mode	-0.25	0.25	V

5.2. Operating Temperature

The operating temperature is listed in the following table:

Table 34: Operating Temperature

Parameter	Min.	Typ.	Max.	Unit
Operation temperature range [1)]	-35	+25	+75	℃
Extended temperature range [2)]	-40		+85	℃

NOTES

1. [1)] Within operation temperature range, the module is 3GPP compliant.
2. [2)] Within extended temperature range, the module remains the ability to establish and maintain a voice, SMS, data transmission, emergency call, etc. There is no unrecoverable malfunction. There are also no effects on radio spectrum and no harm to radio network. Only one or more parameters like P_{out} might reduce in their value and exceed the specified tolerances. When the temperature returns to the normal operating temperature levels, the module will meet 3GPP compliant again.

5.3. Power Supply Ratings

Table 35: Power Supply Ratings of GSM Part (GNSS is Powered off)

Parameter	Description	Conditions	Min.	Typ.	Max.	Unit
VBAT	Supply voltage	Voltage must stay within the min/max values, including voltage drop, ripple, and spikes.	3.3	4.0	4.6	V
	Voltage drop during transmitting burst	Maximum power control level on GSM850 and EGSM900.			400	mV
I_{VBAT}	Average supply current	Power down mode		220		uA
		SLEEP mode @DRX=5		1.2		mA
		Minimum functionality mode AT+CFUN=0				
		IDLE mode		13		mA
		SLEEP mode		0.68		mA
		AT+CFUN=4				
		IDLE mode		13		mA
		SLEEP mode		0.73		mA
		TALK mode				
		GSM850/EGSM900[1)]		208/209		mA
		DCS1800/PCS1900[2)]		142/146		mA

		DATA mode, GPRS (3Rx, 2Tx) GSM850/EGSM900[1)] DCS1800/PCS1900[2)]	 359/360 232/250		 mA mA
		DATA mode, GPRS (2 Rx, 3Tx) GSM850/EGSM900[1)] DCS1800/PCS1900[2)]	 431/413 311/339		 mA mA
		DATA mode, GPRS (4 Rx, 1Tx) GSM850/EGSM900[1)] DCS1800/PCS1900[2)]	 215/153 153/162		 mA mA
		DATA mode, GPRS (1Rx, 4Tx) GSM850/EGSM900[1)] DCS1800/PCS1900[2)]	 499/469[3)] 392/427		 mA mA
	Peak supply current (during transmission slot)	Maximum power control level on GSM850 and EGSM900.	1.6	2	A

NOTES

1. [1)] Power control level PCL 5.
2. [2)] Power control level PCL 0.
3. [3)] Under the GSM850 and EGSM900 spectrum, the power of 1Rx and 4Tx is reduced.

Table 36: Power Supply Ratings of GNSS Part

Parameter	Description	Conditions	Min.	Typ.	Max.	Unit
GNSS_VCC	Supply voltage	Voltage must stay within the min/max values, including voltage drop, ripple, and spikes.	2.8	3.3	4.3	V
I_{VCCP}[1)]	Peak supply current	VCC=3.3V			150	mA

NOTE

[1)] This figure can be used to determine the maximum current capability of power supply.

5.4. Current Consumption

Table 37: Current Consumption of GSM Part (GNSS is Powered off)

Condition	Current Consumption
Voice Call	
GSM850	@power level #5 <300mA, Typical 174mA @power level #12, Typical 83mA @power level #19, Typical 62mA
EGSM900	@power level #5 <300mA, Typical 175mA @power level #12, Typical 83mA @power level #19, Typical 63mA
DCS1800	@power level #0 <250mA, Typical 153mA @power level #7, Typical 73mA @power level #15, Typical 60mA
PCS1900	@power level #0 <250mA, Typical 151mA @power level #7, Typical 76mA @power level #15, Typical 61mA
GPRS Data	
DATA Mode, GPRS (3 Rx, 2Tx) CLASS 12	
GSM850	@power level #5 <550mA, Typical 363mA @power level #12, Typical 131mA @power level #19, Typical 91mA
EGSM900	@power level #5 <550mA, Typical 356mA @power level #12, Typical 132mA @power level #19, Typical 92mA
DCS1800	@power level #0 <450mA, Typical 234mA @power level #7, Typical 112mA @power level #15, Typical 88mA
PCS1900	@power level #0 <450mA, Typical 257mA @power level #7, Typical 119mA @power level #15, Typical 89mA
DATA Mode, GPRS (2 Rx, 3Tx) CLASS 12	
GSM850	@power level #5 <640mA, Typical 496mA @power level #12, Typical 159mA @power level #19, Typical 99mA
EGSM900	@power level #5 <600mA, Typical 487mA @power level #12, Typical 160mA

	@power level #19, Typical 101mA
DCS1800	@power level #0 <490mA, Typical 305mA @power level #7, Typical 131mA @power level #15, Typical 93mA
PCS1900	@power level #0 <480mA, Typical 348mA @power level #7, Typical 138mA @power level #15, Typical 94mA
DATA Mode, GPRS (4 Rx,1Tx) CLASS 12	
GSM850	@power level #5 <350mA, Typical 216mA @power level #12, Typical 103mA @power level #19, Typical 83mA
EGSM900	@power level #5 <350mA, Typical 222mA @power level #12, Typical 104mA @power level #19, Typical 84mA
DCS1800	@power level #0 <300mA, Typical 171mA @power level #7, Typical 96mA @power level #15, Typical 82mA
PCS1900	@power level #0 <300mA, Typical 169mA @power level #7, Typical 98mA @power level #15, Typical 83mA
DATA Mode, GPRS (1 Rx, 4Tx) CLASS 12	
GSM850	@power level #5 <600mA, Typical 470mA @power level #12, Typical 182mA @power level #19, Typical 106mA
EGSM900	@power level #5 <600mA, Typical 471mA @power level #12, Typical 187mA @power level #19, Typical 109mA
DCS1800	@power level #0 <500mA, Typical 377mA @power level #7, Typical 149mA @power level #15, Typical 97mA
PCS1900	@power level #0 <500mA, Typical 439mA @power level #7, Typical 159mA @power level #15, Typical 99mA

NOTE

GPRS Class 12 is the default setting. The GSM module can be configured from GPRS Class 1 to Class 12. Setting to lower GPRS class would make it easier to design the power supply for the GSM module.

Table 38: Current Consumption of the GNSS Part

Parameter	Conditions	Typ.	Unit
I_{VCC} @Acquisition	@VCC=3.3V (GPS)	25	mA
I_{VCC} @Tracking	@VCC=3.3V (GPS)	19	mA
I_{VCC} @Acquisition	@VCC=3.3V (GPS+BeiDou)	23	mA
I_{VCC} @Tracking	@VCC=3.3V (GPS+BeiDou)	18	mA
I_{VCC} @Standby	@VCC=3.3V	0.3	mA
I_{BCKP} @backup	@V_BCKP=3.3V	14	uA

NOTE

The tracking current is tested in following conditions:

- For Cold Start, 10 minutes after First Fix.
- For Hot Start, 15 seconds after First Fix.

5.5. Electrostatic Discharge

Although the module is generally protected against Electrostatic Discharge (ESD), ESD protection precautions should still be emphasized. Proper ESD handling and packaging procedures must be applied throughout the processing, handling and operation of any applications using the module.

The measured ESD values of the module are shown in the following table.

Table 39: ESD Endurance (Temperature: 25ºC, Humidity: 45%)

Tested Point	Contact Discharge	Air Discharge
VBAT, GND	±5KV	±10KV
RF_ANT	±5KV	±10KV
TXD, RXD	±2KV	±4KV
GNSS_TXD GNSS_RXD	±2KV	±4KV
Others	±0.5KV	±1KV

6 Mechanical Dimensions

This chapter describes the mechanical dimensions of the module.

6.1. Mechanical Dimensions of Module

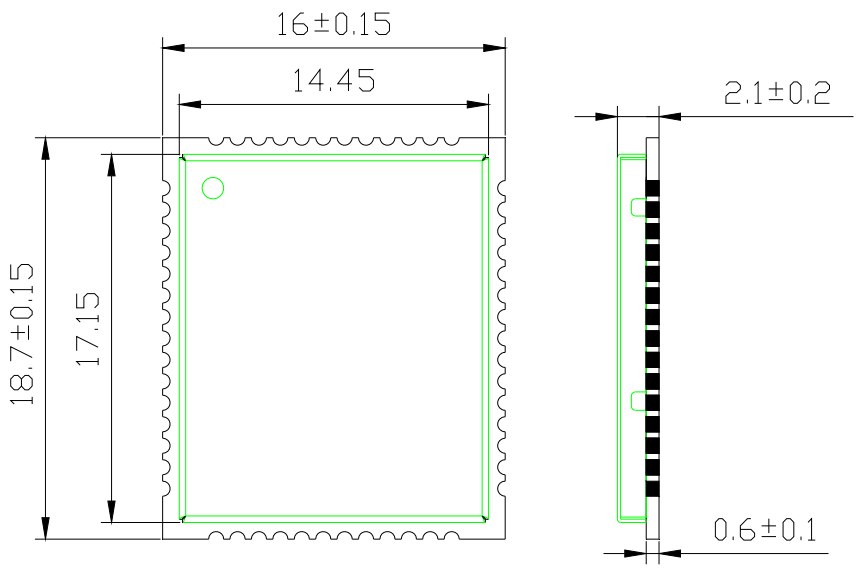

Figure 42: MC20 Top and Side Dimensions (Unit: mm)

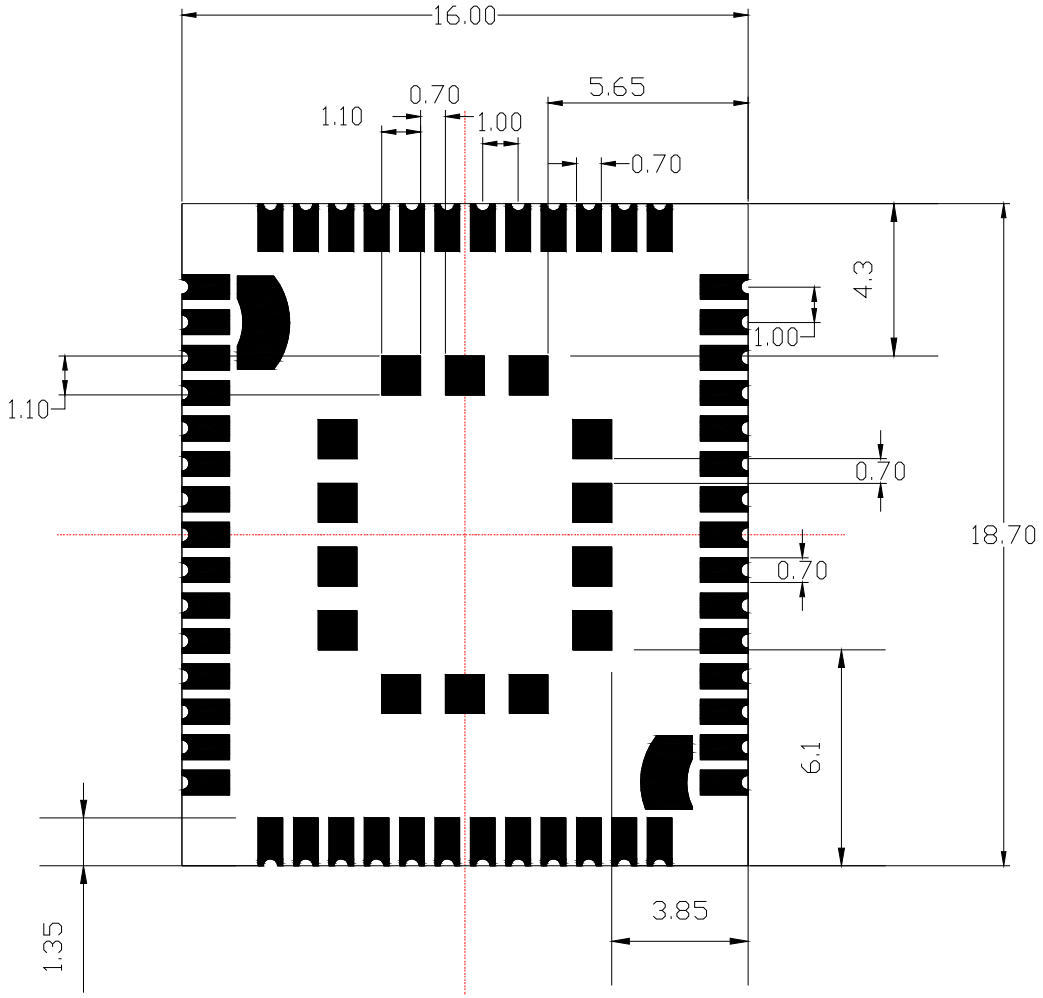

Figure 43: MC20 Bottom Dimensions (Unit: mm)

6.2. Recommended Footprint

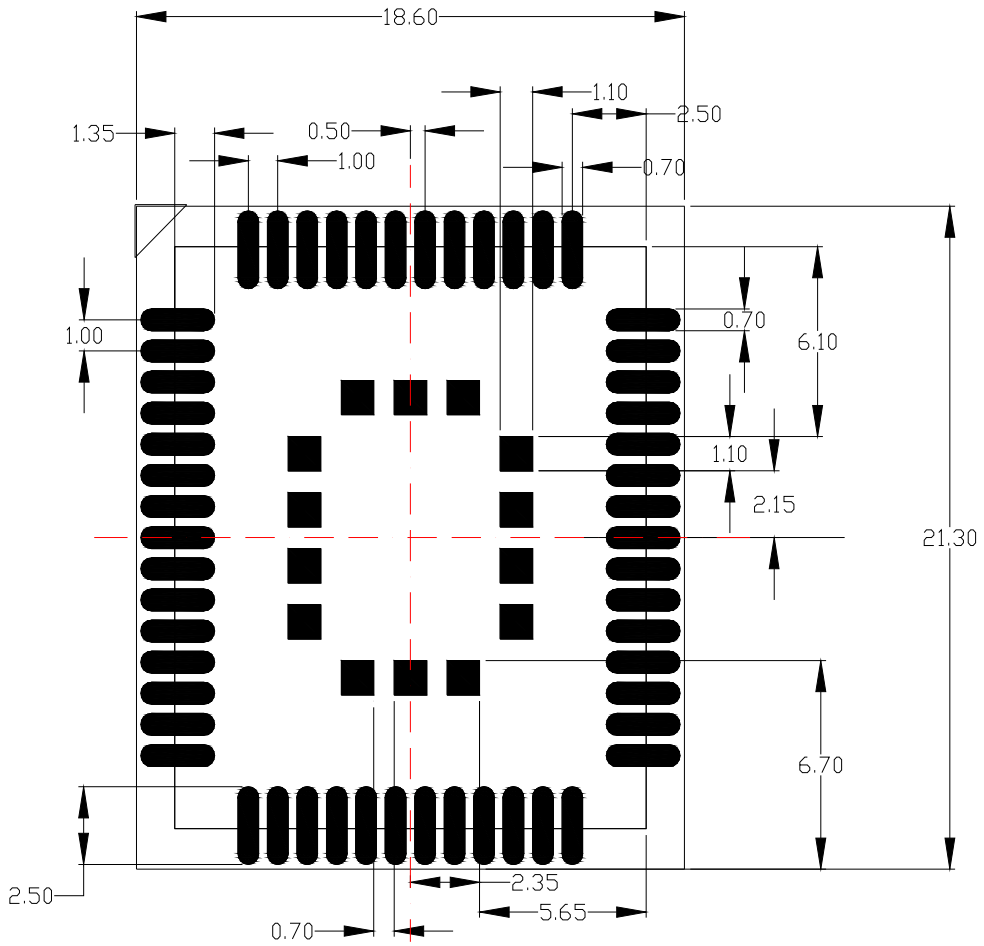

Figure 44: Recommended Footprint (Unit: mm)

NOTES

1. For convenient maintenance, the module should be kept about 3mm away from the other components in the host PCB.
2. The circular test points with a radius of 1.75mm in the above recommended footprint should be treated as keepout areas. ("keepout" means do not pour copper on the mother board).

6.3. Top and Bottom View of the Module

Figure 45: Top View of the Module

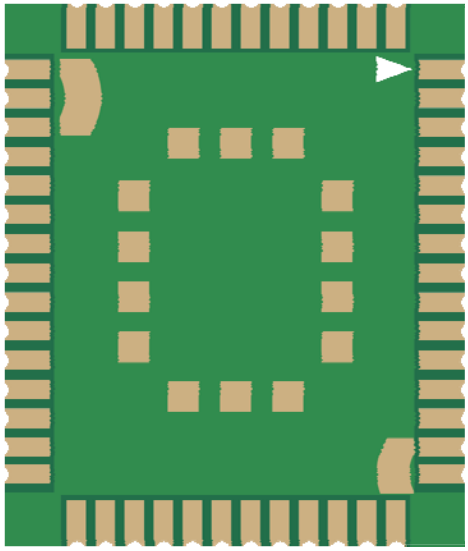

Figure 46: Bottom View of the Module

NOTE

These are design effect drawings of MC20 module. For more accurate pictures, please refer to the module that you get from Quectel.

7 Storage and Manufacturing

7.1. Storage

MC20 module is stored in a vacuum-sealed bag. The storage restrictions are shown as below.

1. Shelf life in the vacuum-sealed bag: 12 months at <40ºC and <90%RH.

2. After the vacuum-sealed bag is opened, devices that need to be mounted directly must be:

- Mounted within 72 hours at the factory environment of ≤30ºC and <60% RH.
- Stored at <10% RH.

3. Devices require baking before mounting, if any circumstance below occurs.

- When the ambient temperature is 23ºC±5ºC and the humidity indication card shows the humidity is >10% before opening the vacuum-sealed bag.
- Device mounting cannot be finished within 72 hours when the ambient temperature is <30ºC and the humidity is <60%.
- Stored at >10% RH.

4. If baking is required, devices should be baked for 48 hours at 125ºC±5ºC.

NOTE

As the plastic package cannot be subjected to high temperature, it should be removed from devices before high temperature (125ºC) baking. If shorter baking time is desired, please refer to IPC/JEDECJ-STD-033 for baking procedure.

7.2. Soldering

Push the squeegee to apply the solder paste on the surface of stencil, thus making the paste fill the stencil openings and then penetrate to the PCB. The force on the squeegee should be adjusted properly so as to produce a clean stencil surface on a single pass. To ensure the module soldering quality, the

thickness of stencil at the hole of the module pads should be 0.2 mm for MC20. For more details, please refer to ***document [12]***

It is suggested that the peak reflow temperature is from 235ºC to 245ºC (for SnAg3.0Cu0.5 alloy). The absolute maximum reflow temperature is 260ºC. To avoid damage to the module caused by repeated heating, it is suggested that the module should be mounted after reflow soldering for the other side of PCB has been completed. Recommended reflow soldering thermal profile is shown below:

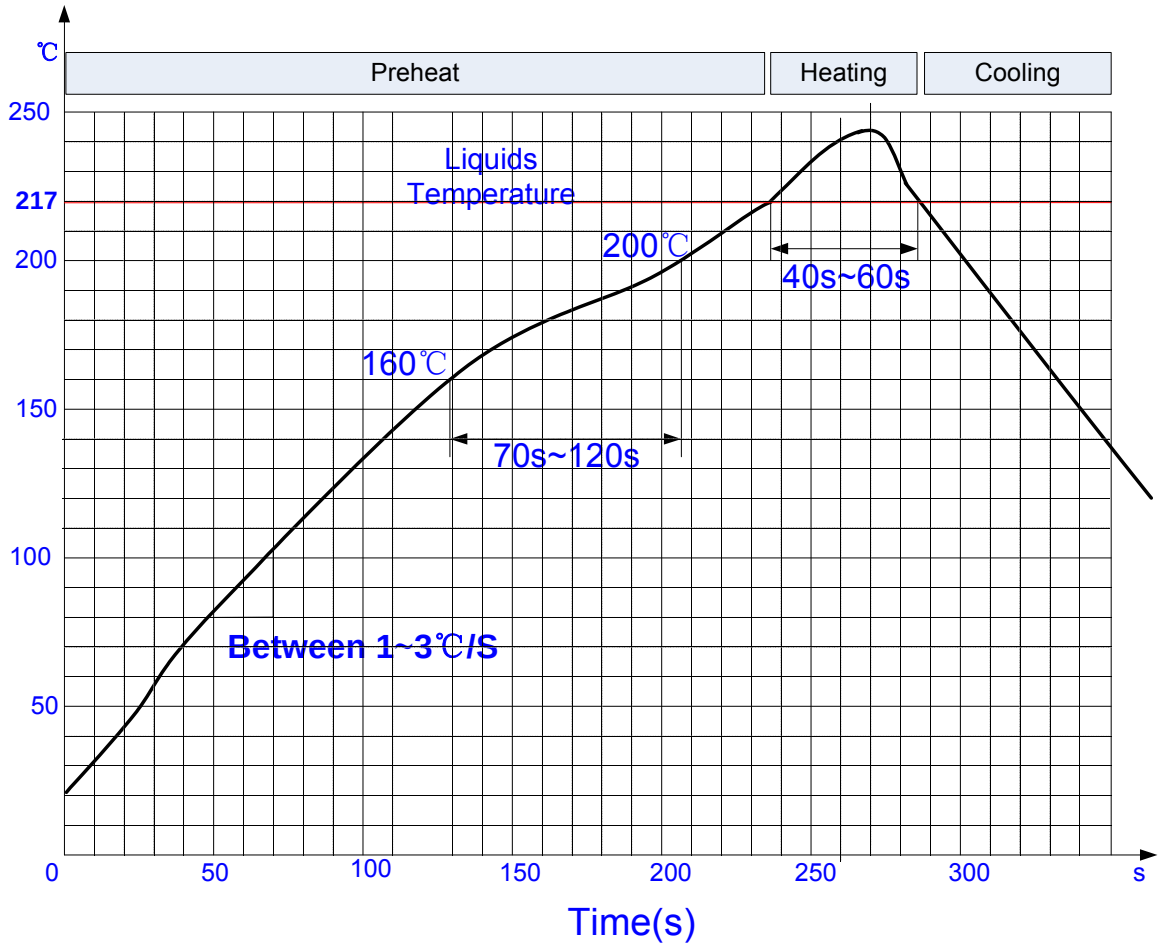

Figure 47: Reflow Soldering Thermal Profile

7.3. Packaging

The modules are stored in a vacuum-sealed bag which is ESD protected. It should not be opened until the devices are ready to be soldered onto the application.

7.3.1. Tape and Reel Packaging

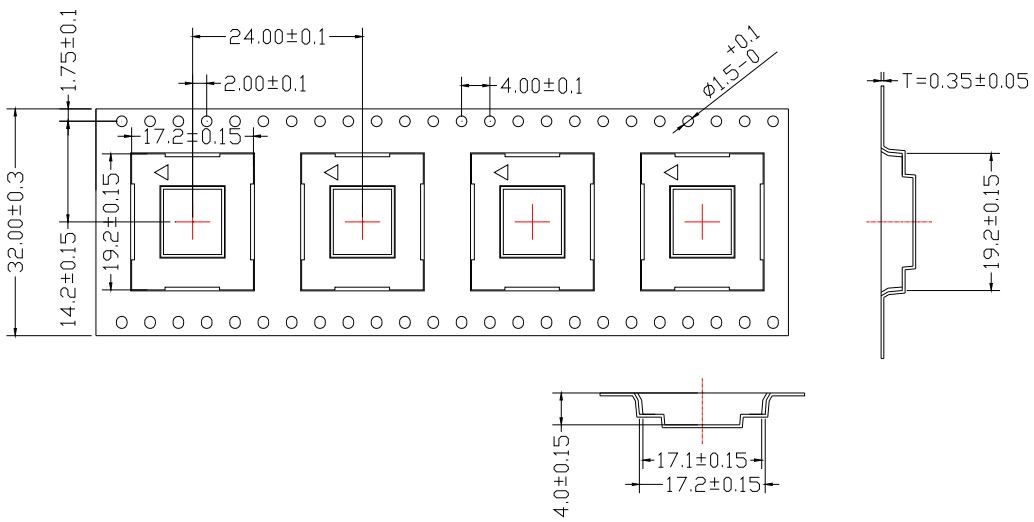

Figure 48: Tape and Reel Specification

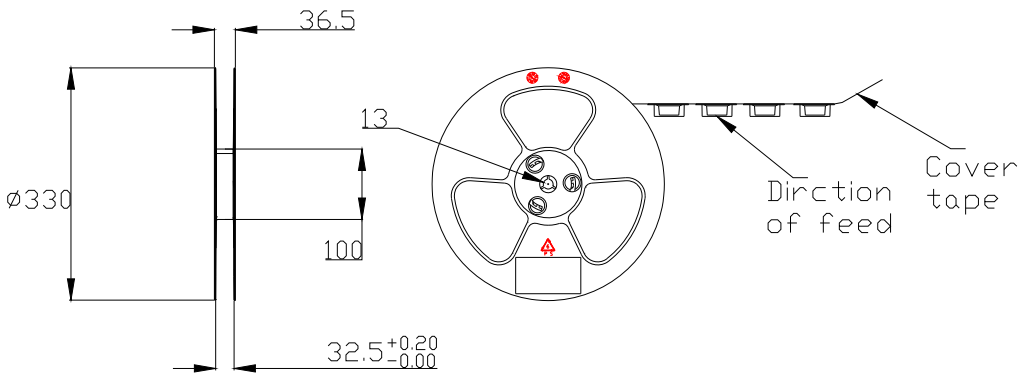

Figure 49: Dimensions of Reel

Table 40: Reel Packaging

Model Name	MOQ for MP	Minimum Package:250pcs	Minimum Packagex4=1000pcs
MC20	250pcs	Size: 370mm×350mm×56mm N.W: 0.32kg G.W: 1.08kg	Size: 380mm×250mm×365mm N.W: 1.28kg G.W: 4.8kg

8 Appendix A References

Table 41: Related Documents

SN	Document Name	Remark
[1]	Quectel_MC20_AT_Commands_Manual	MC20 AT commands manual
[2]	ITU-T Draft new recommendation V.25ter	Serial asynchronous automatic dialing and control
[3]	GSM 07.07	Digital cellular telecommunications (Phase 2+); AT command set for GSM Mobile Equipment (ME)
[4]	GSM 07.10	Support GSM 07.10 multiplexing protocol
[5]	GSM 07.05	Digital cellular telecommunications (Phase 2+); Use of Data Terminal Equipment – Data Circuit terminating Equipment (DTE – DCE) interface for Short Message Service (SMS) and Cell Broadcast Service (CBS)
[6]	GSM 11.14	Digital cellular telecommunications (Phase 2+); Specification of the SIM Application Toolkit for the Subscriber Identity module – Mobile Equipment (SIM – ME) interface
[7]	GSM 11.11	Digital cellular telecommunications (Phase 2+); Specification of the Subscriber Identity module – Mobile Equipment (SIM – ME) interface
[8]	GSM 03.38	Digital cellular telecommunications (Phase 2+); Alphabets and language-specific information
[9]	GSM 11.10	Digital cellular telecommunications (Phase 2); Mobile Station (MS) conformance specification; Part 1: Conformance specification

[10]	GSM_UART_Application_Note	UART port application note
[11]	GSM_EVB_User_Guide	GSM EVB user guide
[12]	Module_Secondary_SMT_User_Guide	Module secondary SMT user guide
[13]	Quectel_GSM_Module_Digital_IO_Application_Note	GSM Module Digital IO Application Note

Table 42: Terms and Abbreviations

Abbreviation	Description
ADC	Analog-to-Digital Converter
AMR	Adaptive Multi-Rate
ARP	Antenna Reference Point
ASIC	Application Specific Integrated Circuit
BER	Bit Error Rate
BOM	Bill of Material
BT	Bluetooth
BTS	Base Transceiver Station
CHAP	Challenge Handshake Authentication Protocol
CS	Coding Scheme
CSD	Circuit Switched Data
CTS	Clear to Send
DAC	Digital-to-Analog Converter
DRX	Discontinuous Reception
DSP	Digital Signal Processor
DCE	Data Communications Equipment (typically module)
DTE	Data Terminal Equipment (typically computer, external controller)
DTR	Data Terminal Ready

DTX	Discontinuous Transmission
EFR	Enhanced Full Rate
EGSM	Enhanced GSM
EMC	Electromagnetic Compatibility
ESD	Electrostatic Discharge
ETS	European Telecommunication Standard
FCC	Federal Communications Commission (U.S.)
FDMA	Frequency Division Multiple Access
FR	Full Rate
FS	File System
GMSK	Gaussian Minimum Shift Keying
GPRS	General Packet Radio Service
GSM	Global System for Mobile Communications
G.W	Gross Weight
HR	Half Rate
I/O	Input/Output
IC	Integrated Circuit
IMEI	International Mobile Equipment Identity
$I_O$max	Maximum Output Load Current
kbps	Kilo Bits Per Second
LED	Light Emitting Diode
Li-Ion	Lithium-Ion
MO	Mobile Originated
MOQ	Minimum Order Quantity
MP	Manufacture Product

MS	Mobile Station (GSM engine)
MT	Mobile Terminated
N.W	Net Weight
PAP	Password Authentication Protocol
PBCCH	Packet Switched Broadcast Control Channel
PCB	Printed Circuit Board
PDU	Protocol Data Unit
PPP	Point-to-Point Protocol
RF	Radio Frequency
RMS	Root Mean Square (value)
RTC	Real Time Clock
RX	Receive Direction
SIM	Subscriber Identification Module
SMS	Short Message Service
TDMA	Time Division Multiple Access
TE	Terminal Equipment
TX	Transmitting Direction
UART	Universal Asynchronous Receiver & Transmitter
URC	Unsolicited Result Code
USSD	Unstructured Supplementary Service Data
VSWR	Voltage Standing Wave Ratio
$V_O$max	Maximum Output Voltage Value
$V_O$norm	Normal Output Voltage Value
$V_O$min	Minimum Output Voltage Value
V_{IH}max	Maximum Input High Level Voltage Value

V_{IH}min	Minimum Input High Level Voltage Value
V_{IL}max	Maximum Input Low Level Voltage Value
V_{IL}min	Minimum Input Low Level Voltage Value
V_{I}max	Absolute Maximum Input Voltage Value
V_{I}norm	Absolute Normal Input Voltage Value
V_{I}min	Absolute Minimum Input Voltage Value
V_{OH}max	Maximum Output High Level Voltage Value
V_{OH}min	Minimum Output High Level Voltage Value
V_{OL}max	Maximum Output Low Level Voltage Value
V_{OL}min	Minimum Output Low Level Voltage Value
Phonebook Abbreviations	
LD	SIM Last Dialing phonebook (list of numbers most recently dialed)
MC	Mobile Equipment list of unanswered MT Calls (missed calls)
ON	SIM (or ME) Own Numbers (MSISDNs) list
RC	Mobile Equipment list of Received Calls
SM	SIM phonebook

9 Appendix B GPRS Coding Schemes

Four coding schemes are used in GPRS protocol. The differences between them are shown in the following table.

Table 43: Description of Different Coding Schemes

Scheme	Code Rate	USF	Pre-coded USF	Radio Block excl.USF and BCS	BCS	Tail	Coded Bits	Punctured Bits	Data Rate Kb/s
CS-1	1/2	3	3	181	40	4	456	0	9.05
CS-2	2/3	3	6	268	16	4	588	132	13.4
CS-3	3/4	3	6	312	16	4	676	220	15.6
CS-4	1	3	12	428	16	-	456	-	21.4

Radio block structure of CS-1, CS-2 and CS-3 is shown as the figure below.

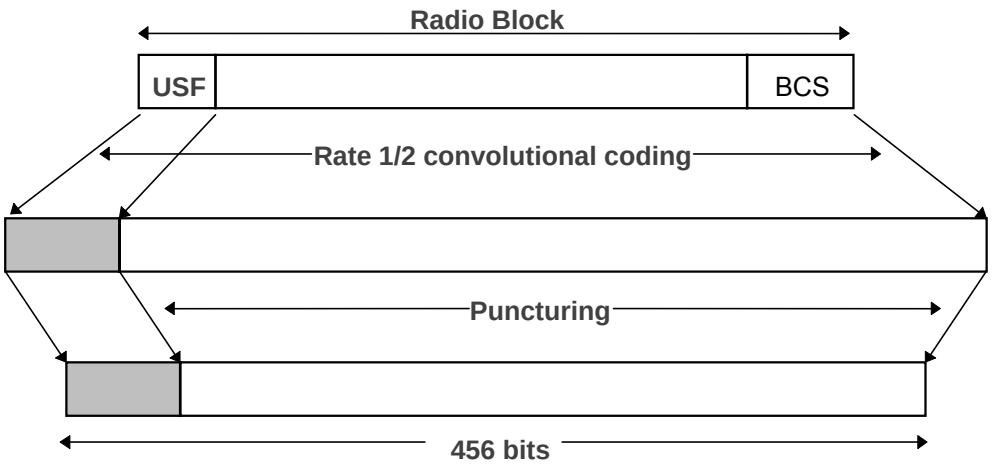

Figure 50: Radio Block Structure of CS-1, CS-2 and CS-3

Radio block structure of CS-4 is shown as the following figure.

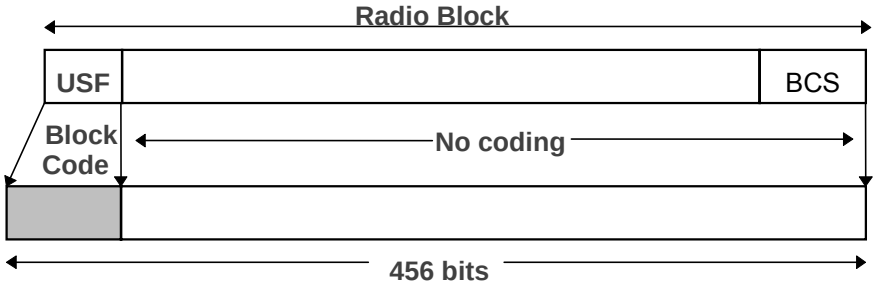

Figure 51: Radio Block Structure of CS-4

10 Appendix C GPRS Multi-slot Classes

Twenty-nine classes of GPRS multi-slot modes are defined for MS in GPRS specification. Multi-slot classes are product dependent, and determine the maximum achievable data rates in both the uplink and downlink directions. Written as 3+1 or 2+2, the first number indicates the amount of downlink timeslots, while the second number indicates the amount of uplink timeslots. The active slots determine the total number of slots the GPRS device can use simultaneously for both uplink and downlink communications. The description of different multi-slot classes is shown in the following table.

Table 44: GPRS Multi-slot Classes

Multislot Class	Downlink Slots	Uplink Slots	Active Slots
1	1	1	2
2	2	1	3
3	2	2	3
4	3	1	4
5	2	2	4
6	3	2	4
7	3	3	4
8	4	1	5
9	3	2	5
10	4	2	5
11	4	3	5
12	4	4	5