EC25 Hardware Design

LTE Module Series

Rev. EC25_Hardware_Design_V1.5

Date: 2018-04-20

Status: Released

www.quectel.com

Our aim is to provide customers with timely and comprehensive service. For any assistance, please contact our company headquarters:

Quectel Wireless Solutions Co., Ltd.
7th Floor, Hongye Building, No.1801 Hongmei Road, Xuhui District, Shanghai 200233, China
Tel: +86 21 5108 6236
Email: info@quectel.com

Or our local office. For more information, please visit:
http://quectel.com/support/sales.htm

For technical support, or to report documentation errors, please visit:
http://quectel.com/support/technical.htm
Or Email to: support@quectel.com

GENERAL NOTES

QUECTEL OFFERS THE INFORMATION AS A SERVICE TO ITS CUSTOMERS. THE INFORMATION PROVIDED IS BASED UPON CUSTOMERS' REQUIREMENTS. QUECTEL MAKES EVERY EFFORT TO ENSURE THE QUALITY OF THE INFORMATION IT MAKES AVAILABLE. QUECTEL DOES NOT MAKE ANY WARRANTY AS TO THE INFORMATION CONTAINED HEREIN, AND DOES NOT ACCEPT ANY LIABILITY FOR ANY INJURY, LOSS OR DAMAGE OF ANY KIND INCURRED BY USE OF OR RELIANCE UPON THE INFORMATION. ALL INFORMATION SUPPLIED HEREIN IS SUBJECT TO CHANGE WITHOUT PRIOR NOTICE.

COPYRIGHT

THE INFORMATION CONTAINED HERE IS PROPRIETARY TECHNICAL INFORMATION OF QUECTEL WIRELESS SOLUTIONS CO., LTD. TRANSMITTING, REPRODUCTION, DISSEMINATION AND EDITING OF THIS DOCUMENT AS WELL AS UTILIZATION OF THE CONTENT ARE FORBIDDEN WITHOUT PERMISSION. OFFENDERS WILL BE HELD LIABLE FOR PAYMENT OF DAMAGES. ALL RIGHTS ARE RESERVED IN THE EVENT OF A PATENT GRANT OR REGISTRATION OF A UTILITY MODEL OR DESIGN.

Copyright © Quectel Wireless Solutions Co., Ltd. 2018. All rights reserved.

About the Document

History

Revision	Date	Author	Description
1.0	2016-04-01	Woody WU	Initial
1.1	2016-09-22	Lyndon LIU/ Frank WANG	1. Updated EC25 series frequency bands in Table 1. 2. Updated transmitting power, supported maximum baud rate of main UART/internal protocols/USB drivers of USB interface, firmware upgrade and temperature range in Table 2. 3. Updated timing of turning on module in Figure 12. 4. Updated timing of turning off module in Figure 13. 5. Updated timing of resetting module in Figure 16. 6. Updated supported baud rates of main UART in Chapter 3.11. 7. Added notes for ADC interface in Chapter 3.13. 8. Updated GNSS performance in Table 21. 9. Updated operating frequencies of module in Table 23. 10. Added current consumption in Chapter 6.4. 11. Updated RF output power in Chapter 6.5. 12. Added RF receiving sensitivity in Chapter 6.6.
1.2	2016-11-04	Lyndon LIU/ Michael ZHANG	1. Added SGMII and WLAN interfaces in Table 2. 2. Updated function diagram in Figure 1. 3. Updated pin assignment (Top View) in Figure 2. 4. Added description of SGMII and WLAN interfaces in Table 4. 5. Added SGMII interface in Chapter 3.17. 6. Added WLAN interface in Chapter 3.18. 7. Added USB_BOOT interface in Chapter 3.19. 8. Added reference design of RF layout in Chapter 5.1.4. 9. Added note about SIMO in Chapter 6.6.
1.3	2017-01-24	Lyndon LIU/ Frank WANG	1. Updated function diagram in Figure 1. 2. Updated pin assignment (top view) in Figure 2.

			3. Added BT interface in Chapter 3.18.2. 4. Updated GNSS performance in Table 24. 5. Updated reference circuit of wireless connectivity interfaces with FC20 module in Figure 29. 6. Updated current consumption of EC25-E module in Table 33. 7. Updated EC25-A conducted RF receiving sensitivity in Table 38. 8. AddedEC25-J conducted RF receiving sensitivity in Table 40.
1.4	2018-03-05	AnniceZHANG/ Lyndon LIU/ Frank WANG	1. Updated functional diagram in Figure 1. 2. Updated frequency bands in Table 1. 3. Updated LTE, UMTS and GSM features in Table 2. 4. Updated description of pin 40/136/137/138. 5. Updated PWRKEY pulled down time to 500ms in Chapter 3.7.1 and reference circuit in Figure 10. 6. Updated reference circuit of (U)SIM interface in Figure 17&18. 7. Updated reference circuit of USB interface in Figure 19. 8. Updated PCM mode in Chapter 3.12. 9. Added SD card interface in Chapter 3.13. 10. Updated USB_BOOT reference circuit in Chapter 3.20. 11. Updated module operating frequencies in Table 26. 12. Updated antenna requirements in Table 30. 13. Updated EC25 series module current consumption in Chapter 6.4. 14. Updated EC25 series module conducted RF receiving sensitivity in Chapter 6.6. 15. Added thermal consideration description in Chapter 6.8. 16. Added dimension tolerance information in Chapter 7. 17. Added storage temperature range in Table 2 and Chapter 6.3. 18. Updated RF output power in Table 41. 19. Updated GPRS multi-slot classes in Table 53. 20. Updated storage information in Chapter 8.1.
1.5	2018-04-20	Kinsey ZHANG	1. Added information of EC25-AF in Table 1. 2. Updated module operating frequencies in Table 27. 3. Added current consumption of EC25-AF module in Table 40. 4. Changed GNSS current consumption of EC25 series module into Table 41.

	5. Added EC25-AF conducted RF receiving sensitivity in Table 50.

Contents

About the Document **2**
Contents **5**
Table Index **8**
Figure Index **10**

1 Introduction **12**
1.1. Safety Information 13

2 Product Concept **14**
2.1. General Description 14
2.2. Key Features 15
2.3. Functional Diagram 18
2.4. Evaluation Board 19

3 Application Interfaces **20**
3.1. General Description 20
3.2. Pin Assignment 21
3.3. Pin Description 22
3.4. Operating Modes 34
3.5. Power Saving 34
3.5.1. Sleep Mode 34
3.5.1.1. UART Application 34
3.5.1.2. USB Application with USB Remote Wakeup Function 35
3.5.1.3. USB Application with USB Suspend/Resume and RI Function 36
3.5.1.4. USB Application without USB Suspend Function 37
3.5.2. Airplane Mode 37
3.6. Power Supply 38
3.6.1. Power Supply Pins 38
3.6.2. Decrease Voltage Drop 39
3.6.3. Reference Design for Power Supply 40
3.6.4. Monitor the Power Supply 40
3.7. Turn on and off Scenarios 40
3.7.1. Turn on Module Using the PWRKEY 40
3.7.2. Turn off Module 42
3.7.2.1. Turn off Module Using the PWRKEY Pin 42
3.7.2.2. Turn off Module Using AT Command 43
3.8. Reset the Module 43
3.9. (U)SIM Interface 45
3.10. USB Interface 47
3.11. UART Interfaces 49
3.12. PCM and I2C Interfaces 51
3.13. SD Card Interface 54
3.14. ADC Interfaces 56

3.15. Network Status Indication 57
3.16. STATUS 58
3.17. Behaviors of RI 59
3.18. SGMII Interface 60
3.19. Wireless Connectivity Interfaces 62
3.19.1. WLAN Interface 64
3.19.2. BT Interface* 64
3.20. USB_BOOT Interface 65

4 GNSS Receiver 66
4.1. General Description 66
4.2. GNSS Performance 66
4.3. Layout Guidelines 67

5 Antenna Interfaces 68
5.1. Main/Rx-diversity Antenna Interfaces 68
5.1.1. Pin Definition 68
5.1.2. Operating Frequency 68
5.1.3. Reference Design of RF Antenna Interface 70
5.1.4. Reference Design of RF Layout 70
5.2. GNSS Antenna Interface 72
5.3. Antenna Installation 74
5.3.1. Antenna Requirement 74
5.3.2. Recommended RF Connector for Antenna Installation 75

6 Electrical, Reliability and Radio Characteristics 77
6.1. Absolute Maximum Ratings 77
6.2. Power Supply Ratings 78
6.3. Operation and Storage Temperatures 78
6.4. Current Consumption 79
6.5. RF Output Power 90
6.6. RF Receiving Sensitivity 91
6.7. Electrostatic Discharge 95
6.8. Thermal Consideration 95

7 Mechanical Dimensions 98
7.1. Mechanical Dimensions of the the Module 98
7.2. Recommended Footprint 100
7.3. Design Effect Drawings of the Module 101

8 Storage, Manufacturing and Packaging 102
8.1. Storage 102
8.2. Manufacturing and Soldering 103
8.3. Packaging 104

9 Appendix A References 105
10 Appendix B GPRS Coding Schemes 109

11 Appendix C GPRS Multi-slot Classes 110
12 Appendix D EDGE Modulationand Coding Schemes 112

Table Index

TABLE 1: FREQUENCY BANDS OF EC25 SERIES MODULE 14
TABLE 2: KEY FEATURES OF EC25 MODULE 15
TABLE 3: I/O PARAMETERS DEFINITION 22
TABLE 4: PIN DESCRIPTION 22
TABLE 5: OVERVIEW OF OPERATING MODES 34
TABLE 6: VBAT AND GND PINS 38
TABLE 7: PIN DEFINITION OF PWRKEY 41
TABLE 8: RESET_N PIN DESCRIPTION 43
TABLE 9: PIN DEFINITION OF THE (U)SIM INTERFACE 45
TABLE 10: PIN DESCRIPTION OF USB INTERFACE 47
TABLE 11: PIN DEFINITION OF MAIN UART INTERFACE 49
TABLE 12: PIN DEFINITION OF DEBUG UART INTERFACE 49
TABLE 13: LOGIC LEVELS OF DIGITAL I/O 50
TABLE 14: PIN DEFINITION OF PCM AND I2C INTERFACES 52
TABLE 15: PIN DEFINITION OF SD CARD INTERFACE 54
TABLE 16: PIN DEFINITION OF ADC INTERFACES 56
TABLE 17: CHARACTERISTIC OF ADC 56
TABLE 18: PIN DEFINITION OF NETWORK CONNECTION STATUS/ACTIVITY INDICATOR 57
TABLE 19: WORKING STATE OF THE NETWORK CONNECTION STATUS/ACTIVITY INDICATOR 57
TABLE 20: PIN DEFINITION OF STATUS 58
TABLE 21: BEHAVIOR OF RI 59
TABLE 22: PIN DEFINITION OF THE SGMII INTERFACE 60
TABLE 23: PIN DEFINITION OF WIRELESS CONNECTIVITY INTERFACES 62
TABLE 24: PIN DEFINITION OF USB_BOOT INTERFACE 65
TABLE 25: GNSS PERFORMANCE 66
TABLE 26: PIN DEFINITION OF RF ANTENNA 68
TABLE 27: MODULE OPERATING FREQUENCIES 68
TABLE 28: PIN DEFINITION OF GNSS ANTENNA INTERFACE 72
TABLE 29: GNSS FREQUENCY 73
TABLE 30: ANTENNA REQUIREMENTS 74
TABLE 31: ABSOLUTE MAXIMUM RATINGS 77
TABLE 32: THE MODULE POWER SUPPLY RATINGS 78
TABLE 33: OPERATION AND STORAGE TEMPERATURES 78
TABLE 34: EC25-E CURRENT CONSUMPTION 79
TABLE 35: EC25-A CURRENT CONSUMPTION 81
TABLE 36: EC25-V CURRENT CONSUMPTION 82
TABLE 37: EC25-J CURRENT CONSUMPTION 83
TABLE 38: EC25-AU CURRENT CONSUMPTION 84
TABLE 39: EC25-AUT CURRENT CONSUMPTION 87
TABLE 40: EC25-AF CURRENT CONSUMPTION 88
TABLE 41: GNSS CURRENT CONSUMPTION OF EC25 SERIES MODULE 90

TABLE 42: RF OUTPUT POWER 90
TABLE 43: EC25-E CONDUCTED RF RECEIVING SENSITIVITY 91
TABLE 44: EC25-A CONDUCTED RF RECEIVING SENSITIVITY 91
TABLE 45: EC25-V CONDUCTED RF RECEIVING SENSITIVITY 92
TABLE 46: EC25-J CONDUCTED RF RECEIVING SENSITIVITY 92
TABLE 47: EC25-AU CONDUCTED RF RECEIVING SENSITIVITY 93
TABLE 48: EC25-AUT CONDUCTED RF RECEIVING SENSITIVITY 93
TABLE 49: EC25-AUTL CONDUCTED RF RECEIVING SENSITIVITY 94
TABLE 50: EC25-AF CONDUCTED RF RECEIVING SENSITIVITY 94
TABLE 51: ELECTROSTATICS DISCHARGE CHARACTERISTICS 95
TABLE 52: RELATED DOCUMENTS 105
TABLE 53: TERMS AND ABBREVIATIONS 105
TABLE 54: DESCRIPTION OF DIFFERENT CODING SCHEMES 109
TABLE 55: GPRS MULTI-SLOT CLASSES 110
TABLE 56: EDGE MODULATION AND CODING SCHEMES 112

Figure Index

FIGURE 1: FUNCTIONAL DIAGRAM 19
FIGURE 2: PIN ASSIGNMENT (TOP VIEW) 21
FIGURE 3: SLEEP MODE APPLICATION VIA UART 35
FIGURE 4: SLEEP MODE APPLICATION WITH USB REMOTE WAKEUP 36
FIGURE 5: SLEEP MODE APPLICATION WITH RI 36
FIGURE 6: SLEEP MODE APPLICATION WITHOUT SUSPEND FUNCTION 37
FIGURE 7: POWER SUPPLY LIMITS DURING BURST TRANSMISSION 39
FIGURE 8: STAR STRUCTURE OF THE POWER SUPPLY 39
FIGURE 9: REFERENCE CIRCUIT OF POWER SUPPLY 40
FIGURE 10: TURN ON THE MODULE BY USING DRIVING CIRCUIT 41
FIGURE 11: TURN ON THE MODULE BY USING BUTTON 41
FIGURE 12: TIMING OF TURNING ON MODULE 42
FIGURE 13: TIMING OF TURNING OFF MODULE 43
FIGURE 14: REFERENCE CIRCUIT OF RESET_N BY USING DRIVING CIRCUIT 44
FIGURE 15: REFERENCE CIRCUIT OF RESET_N BY USING BUTTON 44
FIGURE 16: TIMING OF RESETTING MODULE 44
FIGURE 17: REFERENCE CIRCUIT OF (U)SIM INTERFACE WITH AN 8-PIN (U)SIM CARD CONNECTOR 46
FIGURE 18: REFERENCE CIRCUIT OF (U)SIM INTERFACE WITH A 6-PIN (U)SIM CARD CONNECTOR 46
FIGURE 19: REFERENCE CIRCUIT OF USB APPLICATION 48
FIGURE 20: REFERENCE CIRCUIT WITH TRANSLATOR CHIP 50
FIGURE 21: REFERENCE CIRCUIT WITH TRANSISTOR CIRCUIT 51
FIGURE 22: PRIMARY MODE TIMING 52
FIGURE 23: AUXILIARY MODE TIMING 52
FIGURE 24: REFERENCE CIRCUIT OF PCM APPLICATION WITH AUDIO CODEC 53
FIGURE 25: REFERENCE CIRCUIT OF SD CARD 55
FIGURE 26: REFERENCE CIRCUIT OF THE NETWORK INDICATOR 58
FIGURE 27: REFERENCE CIRCUITS OF STATUS 59
FIGURE 28: SIMPLIFIED BLOCK DIAGRAM FOR ETHERNET APPLICATION 61
FIGURE 29: REFERENCE CIRCUIT OF SGMII INTERFACE WITH PHY AR8033 APPLICATION 61
FIGURE 30: REFERENCE CIRCUIT OF WIRELESS CONNECTIVITY INTERFACES WITH FC20 MODULE 63
FIGURE 31: REFERENCE CIRCUIT OF USB_BOOT INTERFACE 65
FIGURE 32: REFERENCE CIRCUIT OF RF ANTENNA INTERFACE 70
FIGURE 33: MICROSTRIP LINE DESIGN ON A 2-LAYER PCB 71
FIGURE 34: COPLANAR WAVEGUIDE LINE DESIGN ON A 2-LAYER PCB 71
FIGURE 35: COPLANAR WAVEGUIDE LINE DESIGN ON A 4-LAYER PCB (LAYER 3 AS REFERENCE GROUND) 71
FIGURE 36: COPLANAR WAVEGUIDE LINE DESIGN ON A 4-LAYER PCB (LAYER 4 AS REFERENCE GROUND) 72
FIGURE 37: REFERENCE CIRCUIT OF GNSS ANTENNA 73

FIGURE 38: DIMENSIONS OF THE U.FL-R-SMT CONNECTOR (UNIT: MM) 75
FIGURE 39: MECHANICALS OF U.FL-LP CONNECTORS 75
FIGURE 40: SPACE FACTOR OF MATED CONNECTOR (UNIT: MM) 76
FIGURE 41: REFERENCED HEATSINK DESIGN (HEATSINK AT THE TOP OF THE MODULE) 96
FIGURE 42: REFERENCED HEATSINK DESIGN (HEATSINK AT THE BACKSIDE OF CUSTOMERS' PCB) 96
FIGURE 43: MODULE TOP AND SIDE DIMENSIONS 98
FIGURE 44: MODULE BOTTOM DIMENSIONS (BOTTOM VIEW) 99
FIGURE 45: RECOMMENDED FOOTPRINT (TOP VIEW) 100
FIGURE 46: TOP VIEW OF THE MODULE 101
FIGURE 47: BOTTOM VIEW OF THE MODULE 101
FIGURE 48: REFLOW SOLDERING THERMAL PROFILE 103
FIGURE 49: TAPE AND REEL SPECIFICATIONS 104

1 Introduction

This document defines the EC25 module and describes its air interface and hardware interface which are connected with customers' applications.

This document can help customers quickly understand module interface specifications, electrical and mechanical details, as well as other related information of EC25 module. Associated with application note and user guide, customers can use EC25 module to design and set up mobile applications easily.

1.1. Safety Information

The following safety precautions must be observed during all phases of the operation, such as usage, service or repair of any cellular terminal or mobile incorporating EC25 module. Manufacturers of the cellular terminal should send the following safety information to users and operating personnel, and incorporate these guidelines into all manuals supplied with the product. If not so, Quectel assumes no liability for the customers' failure to comply with these precautions.

	Full attention must be given to driving at all times in order to reduce the risk of an accident. Using a mobile while driving (even with a hands free kit) causes distraction and can lead to an accident. You must comply with laws and regulations restricting the use of wireless devices while driving.
	Switch off the cellular terminal or mobile before boarding an aircraft. Make sure it is switched off. The operation of wireless appliances in an aircraft is forbidden, so as to prevent interference with communication systems. Consult the airline staff about the use of wireless devices on boarding the aircraft, if your device offers an Airplane Mode which must be enabled prior to boarding an aircraft.
	Switch off your wireless device when in hospitals,clinics or other health care facilities. These requests are designed to prevent possible interference with sensitive medical equipment.
	Cellular terminals or mobiles operating over radio frequency signal and cellular network cannot be guaranteed to connect in all conditions, for example no mobile fee or with an invalid (U)SIM card. While you are in this condition and need emergent help, please remember using emergency call. In order to make or receive a call, the cellular terminal or mobile must be switched on and in a service area with adequate cellular signal strength.
	Your cellular terminal or mobile contains a transmitter and receiver. When it is ON, it receives and transmits radio frequency energy. RF interference can occur if it is used close to TV set, radio, computer or other electric equipment.
	In locations with potentially explosive atmospheres, obey all posted signs to turn off wireless devices such as your phone or other cellular terminals. Areas with potentially explosive atmospheres include fuelling areas, below decks on boats, fuel or chemical transfer or storage facilities, areas where the air contains chemicals or particles such as grain, dust or metal powders, etc.

2 Product Concept

2.1. General Description

EC25 is a series of LTE-FDD/LTE-TDD/WCDMA/GSM wireless communication module with receive diversity. It provides data connectivity on LTE-FDD, LTE-TDD, DC-HSDPA, HSPA+, HSDPA, HSUPA, WCDMA, EDGE and GPRS networks. It also provides GNSS[1)] and voice functionality[2)] for customers' specific application. EC25 contains seven variants: EC25-E, EC25-A, EC25-V, EC25-J, EC25-AU, EC25-AUT, EC25-AF and EC25-AUTL. Customers can choose a dedicated type based on the region or operator. The following table shows the frequency bands of EC25 series module.

Table 1: Frequency Bands of EC25 Series Module

Modules[2)]	LTE Bands	WCDMA Bands	GSM Bands	Rx-diversity	GNSS[1)]
EC25-E	FDD: B1/B3/B5/B7/B8/B20 TDD: B38/B40/B41	B1/B5/B8	900/1800MHz	Y	GPS, GLONASS, BeiDou/ Compass, Galileo, QZSS
EC25-A	FDD: B2/B4/B12	B2/B4/B5	N	Y	
EC25-V	FDD: B4/B13	N	N	Y	
EC25-J	FDD: B1/B3/B8/B18/B19/ B26 TDD: B41	B1/B6/B8/B19	N	Y	
EC25-AU[3)]	FDD: B1/B2/B3/B4/B5/B7/ B8/B28 TDD: B40	B1/B2/B5/B8	850/900/ 1800/1900MHz	Y	
EC25-AUT	FDD: B1/B3//B5/B7/B28	B1/B5	N	Y	
EC25-AF	FDD: B2/B4//B5/B12/B13/ B14/B66/B71	B2/B4/B5	N	Y	
EC25-AUTL	FDD: B3/B7/B28	N	N	Y	N

NOTES

1. [1] GNSS function is optional.
2. [2] EC25 series module (EC25-E/EC25-A/EC25-V/EC25-J/EC25-AU/EC25-AUT/EC25-AF/EC25-AUTL) contains **Telematics** version and **Data-only** version. **Telematics** version supports voice and data functions, while **Data-only** version only supports data function.
3. [3] B2 band on EC25-AU module does not support Rx-diversity.
4. Y = Supported. N = Not supported.

With a compact profile of 29.0mm × 32.0mm × 2.4mm, EC25 can meet almost all requirements for M2M applications such as automotive, metering, tracking system, security, router, wireless POS, mobile computing device, PDA phone, tablet PC, etc.

EC25 is an SMD type module which can be embedded into applications through its 144-pin pads, including 80 LCC signal pads and 64 LGA pads.

2.2. Key Features

The following table describes the detailed features of EC25 module.

Table 2: Key Features of EC25 Module

Feature	Details
Power Supply	Supply voltage: 3.3V~4.3V Typical supply voltage: 3.8V
Transmitting Power	Class 4 (33dBm±2dB) for GSM850 Class 4 (33dBm±2dB) for EGSM900 Class 1 (30dBm±2dB) for DCS1800 Class 1 (30dBm±2dB) for PCS1900 Class E2 (27dBm±3dB) for GSM850 8-PSK Class E2 (27dBm±3dB) for EGSM900 8-PSK Class E2 (26dBm±3dB) for DCS1800 8-PSK Class E2 (26dBm±3dB) for PCS1900 8-PSK Class 3 (24dBm+1/-3dB) for WCDMA bands Class 3 (23dBm±2dB) for LTE-FDD bands Class 3 (23dBm±2dB) for LTE-TDD bands
LTE Features	Support up to non-CA Cat 4 FDD and TDD Support 1.4MHz~20MHz RF bandwidth Support MIMO in DL direction LTE-FDD: Max 150Mbps (DL)/50Mbps (UL)

	LTE-TDD: Max 130Mbps (DL)/30Mbps (UL)
UMTS Features	Support 3GPP R8 DC-HSDPA, HSPA+, HSDPA, HSUPA and WCDMA Support QPSK, 16-QAM and 64-QAM modulation DC-HSDPA: Max 42Mbps (DL) HSUPA: Max 5.76Mbps (UL) WCDMA: Max 384Kbps (DL)/384Kbps (UL)
GSM Features	**GPRS:** Support GPRS multi-slot class 33 (33 by default) Coding scheme: CS-1, CS-2, CS-3 and CS-4 Max 107Kbps (DL)/85.6Kbps (UL) **EDGE:** Support EDGE multi-slot class 33 (33 by default) Support GMSK and 8-PSK for different MCS (Modulation and Coding Scheme) Downlink coding schemes: CS 1-4 and MCS 1-9 Uplink coding schemes: CS 1-4 and MCS 1-9 Max 296Kbps (DL)/236.8Kbps (UL)
Internet Protocol Features	Support TCP/UDP/PPP/FTP/HTTP/NTP/PING/QMI/CMUX*/HTTPS*/SMTP*/MMS*/FTPS*/SMTPS*/SSL*/FILE* protocols Support PAP (Password Authentication Protocol) and CHAP (Challenge Handshake Authentication Protocol) protocols which are usually used for PPP connections
SMS	Text and PDU mode Point to point MO and MT SMS cell broadcast SMS storage: ME by default
(U)SIM Interface	Support USIM/SIM card: 1.8V, 3.0V
Audio Features	Support one digital audio interface: PCM interface GSM: HR/FR/EFR/AMR/AMR-WB WCDMA: AMR/AMR-WB LTE: AMR/AMR-WB Support echo cancellation and noise suppression
PCM Interface	Used for audio function with external codec Support 16-bit linear data format Support long frame synchronization and short frame synchronization Support master and slave modes, but must be the master in long frame synchronization
USB Interface	Compliant with USB 2.0 specification (slave only); the data transfer rate can reach up to 480Mbps Used for AT command communication, data transmission, GNSS NMEA output, software debugging, firmware upgrade and voice over USB*

	Support USB serial drivers for: Windows 7/8/8.1/10, Windows CE 5.0/6.0/7.0*, Linux 2.6/3.x/4.1~4.14, Android 4.x/5.x/6.x/7.x
UART Interface	**Main UART:** Used for AT command communication and data transmission Baud rates reach up to 921600bps, 115200bps by default Support RTS and CTS hardware flow control **Debug UART:** Used for Linux console and log output 115200bps baud rate
SD Card Interface	Support SD 3.0 protocol
SGMII Interface	Support 10M/100M/1000M Ethernet work mode Support maximum 150Mbps (DL)/50Mbps (UL) for 4G network
Wireless Connectivity Interfaces	Support a low-power SDIO 3.0 interface for WLAN and UART/PCM interface for Bluetooth*
Rx-diversity	Support LTE/WCDMA Rx-diversity
GNSS Features	Gen8C Lite of Qualcomm Protocol: NMEA 0183
AT Commands	Compliant with 3GPP TS 27.007, 27.005 and Quectel enhanced AT commands
Network Indication	Two pins including NET_MODE and NET_STATUS to indicate network connectivity status
Antenna Interfaces	Including main antenna interface (ANT_MAIN), Rx-diversity antenna interface (ANT_DIV) and GNSS antenna interface (ANT_GNSS)
Physical Characteristics	Size: (29.0±0.15)mm × (32.0±0.15)mm × (2.4±0.2)mm Weight: approx. 4.9g
Temperature Range	Operation temperature range: -35°C ~ +75°C[1)] Extended temperature range: -40°C ~ +85°C[2)] Storage temperature range: -40°C~ +90°C
Firmware Upgrade	USB interface and DFOTA*
RoHS	All hardware components are fully compliant with EU RoHS directive

NOTES

1. [1)] Within operation temperature range, the module is 3GPP compliant.
2. [2)] Within extended temperature range, the module remains the ability to establish and maintain a voice, SMS, data transmission, emergency call, etc. There is no unrecoverable malfunction. There are also no effects on radio spectrum and no harm to radio network. Only one or more parameters like P_{out} might reduce in their value and exceed the specified tolerances. When the temperature returns to the normal operating temperature levels, the module will meet 3GPP specifications again.
3. "*" means under development.

2.3. Functional Diagram

The following figure shows a block diagram of EC25 and illustrates the major functional parts.

- Power management
- Baseband
- DDR+NAND flash
- Radio frequency
- Peripheral interfaces

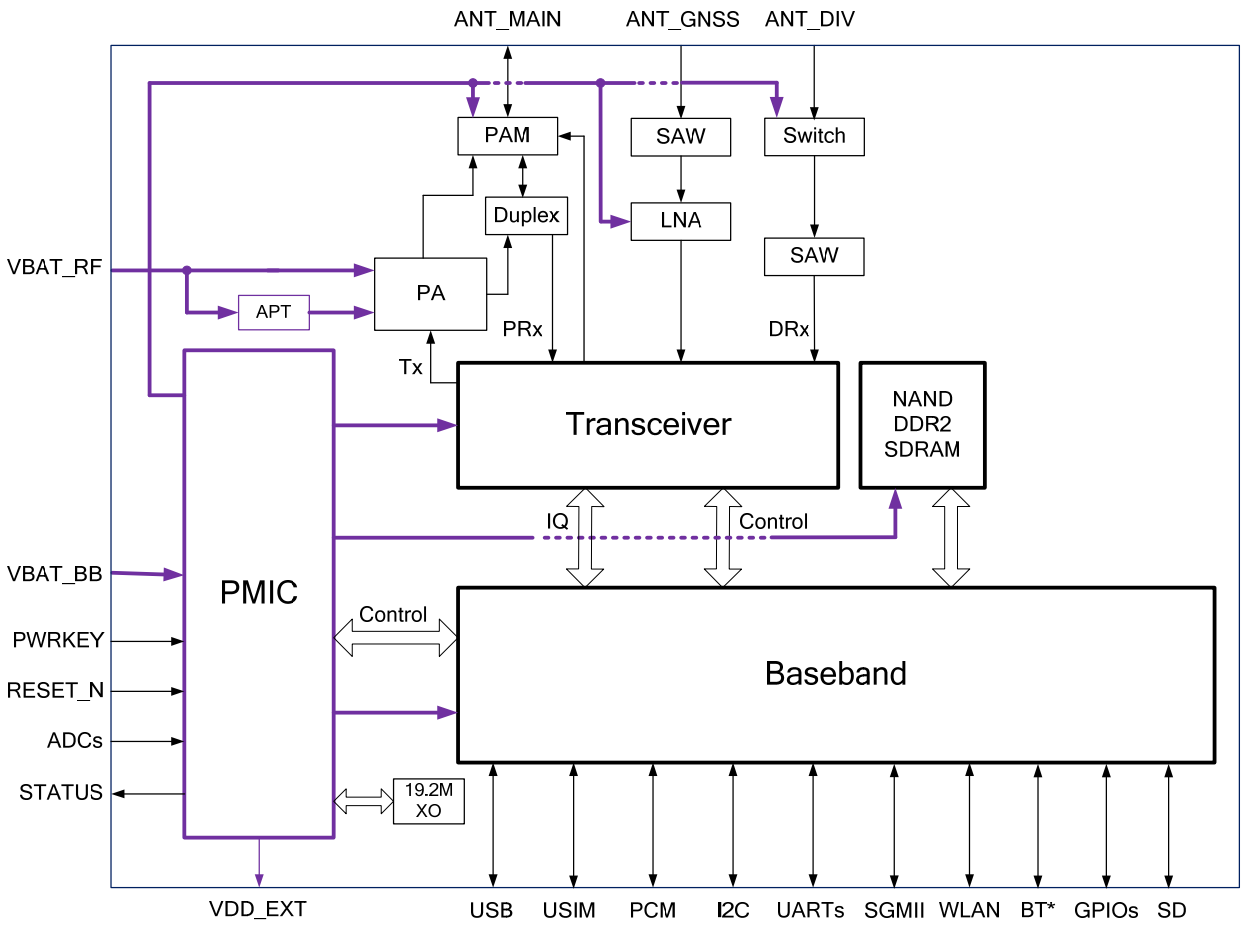

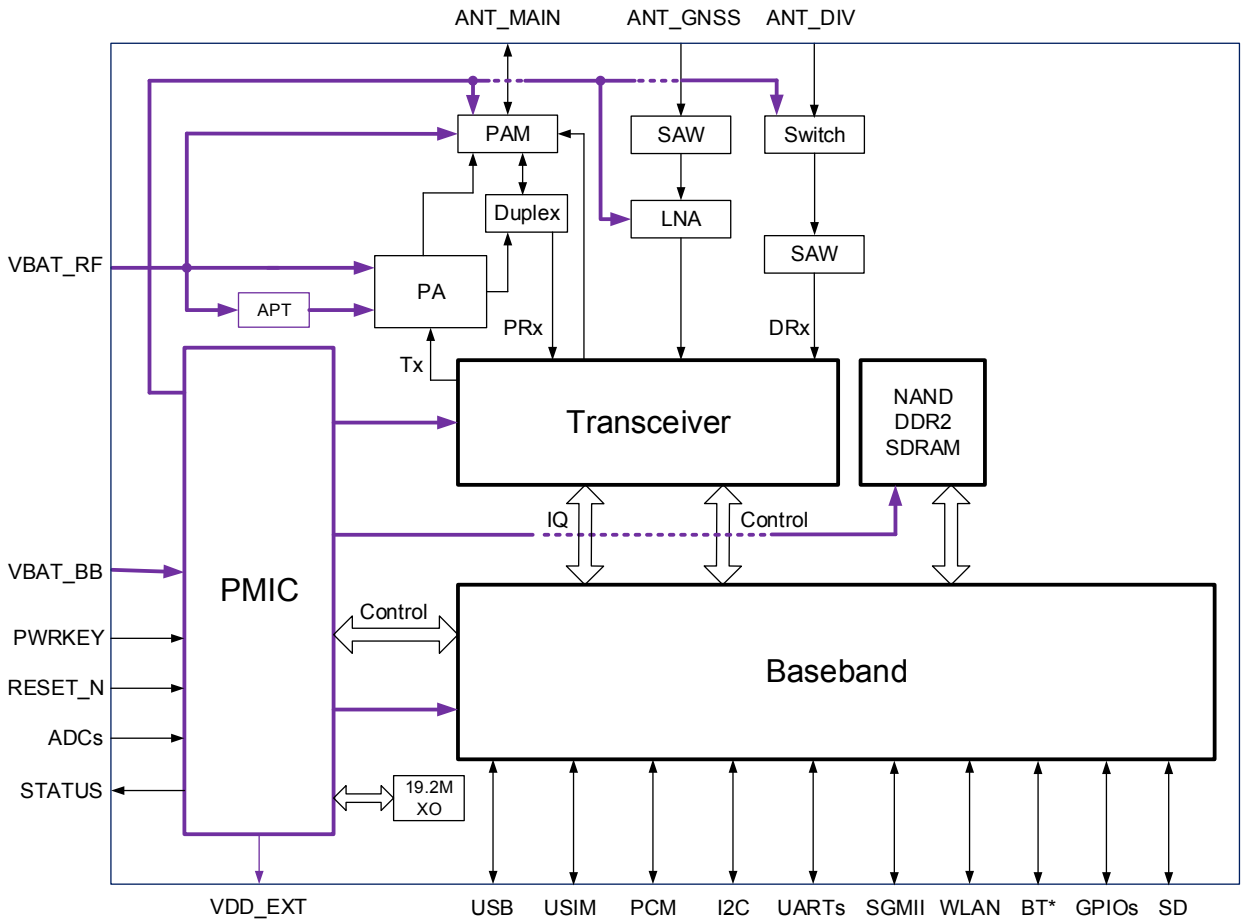

Figure 1: Functional Diagram

NOTE

"*" means under development.

2.4. Evaluation Board

In order to help customers develop applications with EC25, Quectel supplies an evaluation board (EVB), USB to RS-232 converter cable, earphone, antenna and other peripherals to control or test the module.

3 Application Interfaces

3.1. General Description

EC25 is equipped with 80 LCC pads plus 64 LGA pads that can be connected to cellular application platform. Sub-interfaces included in these pads are described in detail in the following chapters:

- Power supply
- (U)SIM interface
- USB interface
- UART interfaces
- PCM and I2C interfaces
- SD card interface
- ADC interfaces
- Status indication
- SGMII interface
- Wireless connectivity interfaces
- USB_BOOT interface

3.2. Pin Assignment

The following figure shows the pin assignment of EC25 module.

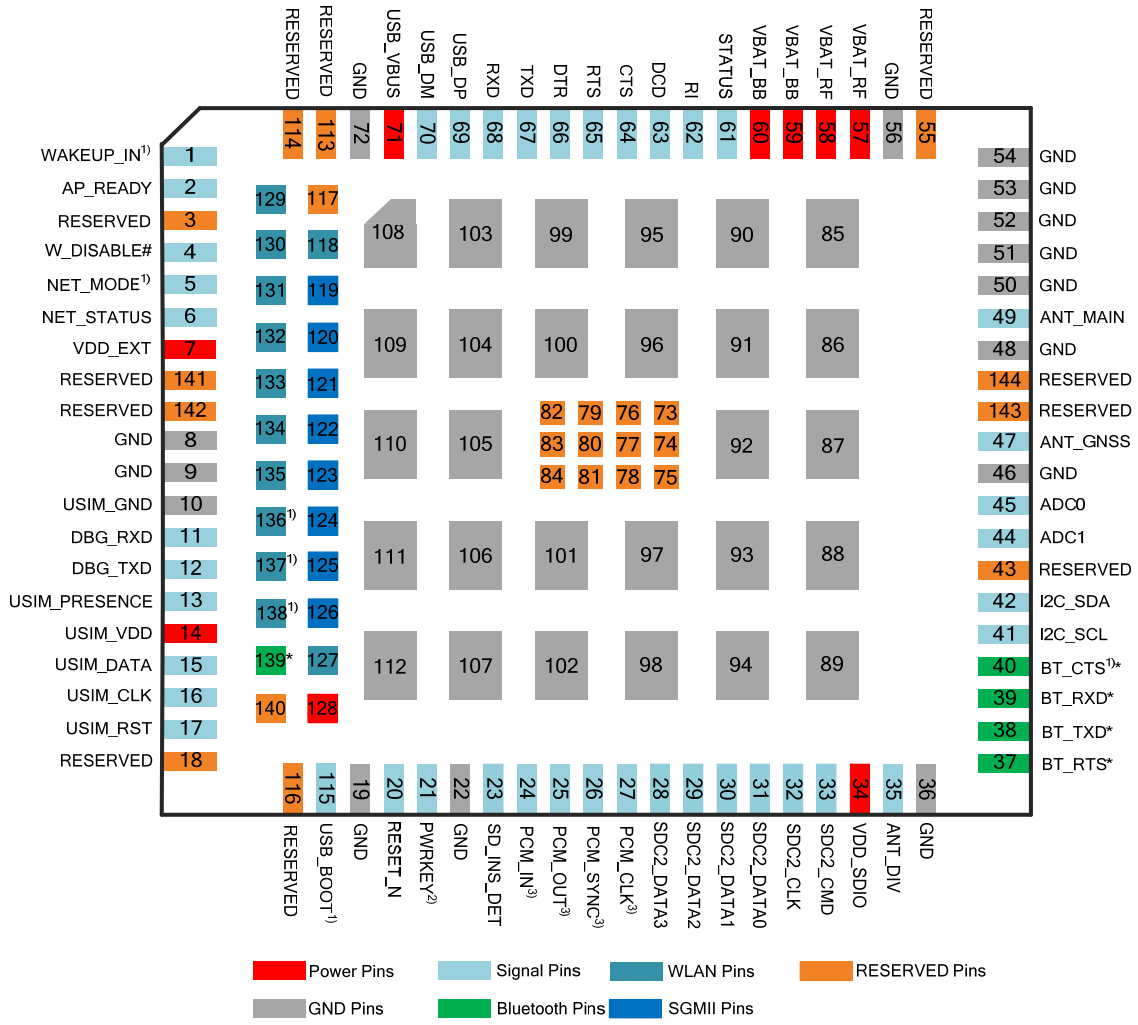

Figure 2: Pin Assignment (Top View)

NOTES

1. 1) means that these pins cannot be pulled up before startup.
2. 2) PWRKEY output voltage is 0.8V because of the diode drop in the Qualcomm chipset.
3. 3) means these interface functions are only supported on **Telematics** version.
4. Pads 37~40, 118, 127 and 129~139 are used for wireless connectivity interfaces, among which pads 118, 127 and 129~138 are WLAN function pins, and the rest are Bluetooth (BT) function pins. BT function is under development.
5. Pads 119~126 and 128 are used for SGMII interface.

6. Pads 24~27 are multiplexing pins used for audio design on the EC25 module and BT function on the BT module.
7. Keep all RESERVED pins and unused pins unconnected.
8. GND pads 85~112 should be connected to ground in the design, and RESERVED pads 73~84 should not be designed in schematic and PCB decal, and these pins should be served as a keep out area.
9. "*" means under development.

3.3. Pin Description

The following tables show the pin definition of EC25 modules.

Table 3: I/O Parameters Definition

Type	Description
IO	Bidirectional
DI	Digital input
DO	Digital output
PI	Power input
PO	Power output
AI	Analog input
AO	Analog output
OD	Open drain

Table 4: Pin Description

Power Supply					
Pin Name	**Pin No.**	**I/O**	**Description**	**DC Characteristics**	**Comment**
VBAT_BB	59, 60	PI	Power supply for module's baseband part	Vmax=4.3V Vmin=3.3V Vnorm=3.8V	It must be able to provide sufficient current up to 0.8A.

VBAT_RF	57, 58	PI	Power supply for module's RF part	Vmax=4.3V Vmin=3.3V Vnorm=3.8V	It must be able to provide sufficient current up to 1.8A in a burst transmission.
VDD_EXT	7	PO	Provide 1.8V for external circuit	Vnorm=1.8V $I_O$max=50mA	Power supply for external GPIO's pull-up circuits.
GND	8, 9, 19, 22, 36, 46, 48, 50~54, 56, 72, 85~112		Ground		
Turn on/off					
Pin Name	**Pin No.**	**I/O**	**Description**	**DC Characteristics**	**Comment**
PWRKEY	21	DI	Turn on/off the module	V_{IH}max=2.1V V_{IH}min=1.3V V_{IL}max=0.5V	The output voltage is 0.8V because of the diode drop in the Qualcomm chipset.
RESET_N	20	DI	Reset the module	V_{IH}max=2.1V V_{IH}min=1.3V V_{IL}max=0.5V	If unused, keep it open.
Status Indication					
Pin Name	**Pin No.**	**I/O**	**Description**	**DC Characteristics**	**Comment**
STATUS	61	OD	Indicate the module operating status	The drive current should be less than 0.9mA.	An external pull-up resistor is required. If unused, keep it open.
NET_MODE	5	DO	Indicate the module network registration mode	V_{OH}min=1.35V V_{OL}max=0.45V	1.8V power domain. Cannot be pulled up before startup. If unused, keep it open.
NET_ STATUS	6	DO	Indicate the module network activity status	V_{OH}min=1.35V V_{OL}max=0.45V	1.8V power domain. If unused, keep it open.
USB Interface					
Pin Name	**Pin No.**	**I/O**	**Description**	**DC Characteristics**	**Comment**
USB_VBUS	71	PI	USB detection	Vmax=5.25V Vmin=3.0V Vnorm=5.0V	Typical: 5.0V If unused, keep it open.

USB_DP	69	IO	USB differential data bus (+)	Compliant with USB 2.0 standard specification.	Require differential impedance of 90Ω. If unused, keep it open.
USB_DM	70	IO	USB differential data bus (-)	Compliant with USB 2.0 standard specification.	Require differential impedance of 90Ω. If unused, keep it open.
(U)SIM Interface					
Pin Name	**Pin No.**	**I/O**	**Description**	**DC Characteristics**	**Comment**
USIM_GND	10		Specified ground for (U)SIM card		
USIM_ PRESENCE	13	DI	(U)SIM card insertion detection	V_{IL}min=-0.3V V_{IL}max=0.6V V_{IH}min=1.2V V_{IH}max=2.0V	1.8V power domain. If unused, keep it open.
USIM_VDD	14	PO	Power supply for (U)SIM card	For 1.8V(U)SIM: Vmax=1.9V Vmin=1.7V For 3.0V(U)SIM: Vmax=3.05V Vmin=2.7V $I_O$max=50mA	Either 1.8V or 3.0V is supported by the module automatically.
USIM_DATA	15	IO	Data signal of (U)SIM card	For 1.8V (U)SIM: V_{IL}max=0.6V V_{IH}min=1.2V V_{OL}max=0.45V V_{OH}min=1.35V For 3.0V (U)SIM: V_{IL}max=1.0V V_{IH}min=1.95V V_{OL}max=0.45V V_{OH}min=2.55V	
USIM_CLK	16	DO	Clock signal of (U)SIM card	For 1.8V (U)SIM: V_{OL}max=0.45V V_{OH}min=1.35V For 3.0V (U)SIM: V_{OL}max=0.45V V_{OH}min=2.55V	

USIM_RST	17	DO	Reset signal of (U)SIM card	For 1.8V (U)SIM: V_{OL}max=0.45V V_{OH}min=1.35V For 3.0V (U)SIM: V_{OL}max=0.45V V_{OH}min=2.55V	
Main UART Interface					
Pin Name	**Pin No.**	**I/O**	**Description**	**DC Characteristics**	**Comment**
RI	62	DO	Ring indicator	V_{OL}max=0.45V V_{OH}min=1.35V	1.8V power domain. If unused, keep it open.
DCD	63	DO	Data carrier detection	V_{OL}max=0.45V V_{OH}min=1.35V	1.8V power domain. If unused, keep it open.
CTS	64	DO	Clear to send	V_{OL}max=0.45V V_{OH}min=1.35V	1.8V power domain. If unused, keep it open.
RTS	65	DI	Request to send	V_{IL}min=-0.3V V_{IL}max=0.6V V_{IH}min=1.2V V_{IH}max=2.0V	1.8V power domain. If unused, keep it open.
DTR	66	DI	Data terminal ready, sleep mode control	V_{IL}min=-0.3V V_{IL}max=0.6V V_{IH}min=1.2V V_{IH}max=2.0V	1.8V power domain. Pulled up by default. Low level wakes up the module. If unused, keep it open.
TXD	67	DO	Transmit data	V_{OL}max=0.45V V_{OH}min=1.35V	1.8V power domain. If unused, keep it open.
RXD	68	DI	Receive data	V_{IL}min=-0.3V V_{IL}max=0.6V V_{IH}min=1.2V V_{IH}max=2.0V	1.8V power domain. If unused, keep it open.
Debug UART Interface					
Pin Name	**Pin No.**	**I/O**	**Description**	**DC Characteristics**	**Comment**
DBG_TXD	12	DO	Transmit data	V_{OL}max=0.45V V_{OH}min=1.35V	1.8V power domain. If unused, keep it open.
DBG_RXD	11	DI	Receive data	V_{IL}min=-0.3V	1.8V power domain.

				V_{IL}max=0.6V V_{IH}min=1.2V V_{IH}max=2.0V	If unused, keep it open.
ADC Interface					
Pin Name	**Pin No.**	**I/O**	**Description**	**DC Characteristics**	**Comment**
ADC0	45	AI	General purpose analog to digital converter	Voltage range: 0.3V to VBAT_BB	If unused, keep it open.
ADC1	44	AI	General purpose analog to digital converter	Voltage range: 0.3V to VBAT_BB	If unused, keep it open.
PCM Interface					
Pin Name	**Pin No.**	**I/O**	**Description**	**DC Characteristics**	**Comment**
PCM_IN	24	DI	PCM data input	V_{IL}min=-0.3V V_{IL}max=0.6V V_{IH}min=1.2V V_{IH}max=2.0V	1.8V power domain. If unused, keep it open.
PCM_OUT	25	DO	PCM data output	V_{OL}max=0.45V V_{OH}min=1.35V	1.8V power domain. If unused, keep it open.
PCM_SYNC	26	IO	PCM data frame synchronization signal	V_{OL}max=0.45V V_{OH}min=1.35V V_{IL}min=-0.3V V_{IL}max=0.6V V_{IH}min=1.2V V_{IH}max=2.0V	1.8V power domain. In master mode, it is an output signal. In slave mode, it is an input signal. If unused, keep it open.
PCM_CLK	27	IO	PCM clock	V_{OL}max=0.45V V_{OH}min=1.35V V_{IL}min=-0.3V V_{IL}max=0.6V V_{IH}min=1.2V V_{IH}max=2.0V	1.8V power domain. In master mode, it is an output signal. In slave mode, it is an input signal. If unused, keep it open.
I2C Interface					
Pin Name	**Pin No.**	**I/O**	**Description**	**DC Characteristics**	**Comment**
I2C_SCL	41	OD	I2C serial clock Used for external codec.		External pull-up resistor is required. 1.8V only. If unused, keep it open.

I2C_SDA	42	OD	I2C serial dataUsed for external codec.		External pull-up resistor is required. 1.8V only. If unused, keep it open.
SD Card Interface					
Pin Name	**Pin No.**	**I/O**	**Description**	**DC Characteristics**	**Comment**
SDC2_ DATA3	28	IO	SD card SDIO bus DATA3	**1.8V signaling:** V_{OL}max=0.45V V_{OH}min=1.4V V_{IL}min=-0.3V V_{IL}max=0.58V V_{IH}min=1.27V V_{IH}max=2.0V **3.0V signaling:** V_{OL}max=0.38V V_{OH}min=2.01V V_{IL}min=-0.3V V_{IL}max=0.76V V_{IH}min=1.72V V_{IH}max=3.34V	SDIO signal level can be selected according to SD card supported level, please refer to SD 3.0 protocol for more details. If unused, keep it open.
SDC2_ DATA2	29	IO	SD card SDIO bus DATA2	**1.8V signaling:** V_{OL}max=0.45V V_{OH}min=1.4V V_{IL}min=-0.3V V_{IL}max=0.58V V_{IH}min=1.27V V_{IH}max=2.0V **3.0V signaling:** V_{OL}max=0.38V V_{OH}min=2.01V V_{IL}min=-0.3V V_{IL}max=0.76V V_{IH}min=1.72V V_{IH}max=3.34V	SDIO signal level can be selected according to SD card supported level, please refer to SD 3.0 protocol for more details. If unused, keep it open.
SDC2_ DATA1	30	IO	SD card SDIO bus DATA1	**1.8V signaling:** V_{OL}max=0.45V V_{OH}min=1.4V V_{IL}min=-0.3V V_{IL}max=0.58V V_{IH}min=1.27V	SDIO signal level can be selected according to SD card supported

				V_{IH}max=2.0V **3.0V signaling:** V_{OL}max=0.38V V_{OH}min=2.01V V_{IL}min=-0.3V V_{IL}max=0.76V V_{IH}min=1.72V V_{IH}max=3.34V	level, please refer to SD 3.0 protocol for more details. If unused, keep it open.
SDC2_ DATA0	31	IO	SD card SDIO bus DATA0	**1.8V signaling:** V_{OL}max=0.45V V_{OH}min=1.4V V_{IL}min=-0.3V V_{IL}max=0.58V V_{IH}min=1.27V V_{IH}max=2.0V **3.0V signaling:** V_{OL}max=0.38V V_{OH}min=2.01V V_{IL}min=-0.3V V_{IL}max=0.76V V_{IH}min=1.72V V_{IH}max=3.34V	SDIO signal level can be selected according to SD card supported level, please refer to SD 3.0 protocol for more details. If unused, keep it open.
SDC2_CLK	32	DO	SD card SDIO bus clock	**1.8V signaling:** V_{OL}max=0.45V V_{OH}min=1.4V **3.0V signaling:** V_{OL}max=0.38V V_{OH}min=2.01V	SDIO signal level can be selected according to SD card supported level, please refer to SD 3.0 protocol for more details. If unused, keep it open.
SDC2_CMD	33	IO	SD card SDIO bus command	**1.8V signaling:** V_{OL}max=0.45V V_{OH}min=1.4V V_{IL}min=-0.3V V_{IL}max=0.58V V_{IH}min=1.27V V_{IH}max=2.0V **3.0V signaling:** V_{OL}max=0.38V V_{OH}min=2.01V V_{IL}min=-0.3V	SDIO signal level can be selected according to SD card supported level, please refer to SD 3.0 protocol for more details. If unused, keep it open.

				V_{IL}max=0.76V V_{IH}min=1.72V V_{IH}max=3.34V	
SD_INS_DET	23	DI	SD card insertion detect	V_{IL}min=-0.3V V_{IL}max=0.6V V_{IH}min=1.2V V_{IH}max=2.0V	1.8V power domain. If unused, keep it open.
VDD_SDIO	34	PO	SD card SDIO bus pull-up power	$I_O$max=50mA	1.8V/2.85V configurable. Cannot be used for SD card power. If unused, keep it open.
SGMII Interface					
Pin Name	**Pin No.**	**I/O**	**Description**	**DC Characteristics**	**Comment**
EPHY_RST_N	119	DO	Ethernet PHY reset	For 1.8V: V_{OL}max=0.45V V_{OH}min=1.4V For 2.85V: V_{OL}max=0.35V V_{OH}min=2.14V	1.8V/2.85V power domain. If unused, keep it open.
EPHY_INT_N	120	DI	Ethernet PHY interrupt	V_{IL}min=-0.3V V_{IL}max=0.6V V_{IH}min=1.2V V_{IH}max=2.0V	1.8V power domain. If unused, keep it open.
SGMII_MDATA	121	IO	SGMII MDIO (Management Data Input/Output) data	For 1.8V: V_{OL}max=0.45V V_{OH}min=1.4V V_{IL}max=0.58V V_{IH}min=1.27V For 2.85V: V_{OL}max=0.35V V_{OH}min=2.14V V_{IL}max=0.71V V_{IH}min=1.78V	1.8V/2.85V power domain. If unused, keep it open.
SGMII_MCLK	122	DO	SGMII MDIO (Management Data Input/Output) clock	For 1.8V: V_{OL}max=0.45V V_{OH}min=1.4V For 2.85V: V_{OL}max=0.35V V_{OH}min=2.14V	1.8V/2.85V power domain. If unused, keep it open.

USIM2_VDD	128	PO	SGMII MDIO pull-up power source		Configurable power source. 1.8V/2.85V power domain. External pull-up for SGMII MDIO pins. If unused, keep it open.
SGMII_TX_M	123	AO	SGMII transmission - minus		Connect with a 0.1uF capacitor, close to the PHY side. If unused, keep it open.
SGMII_TX_P	124	AO	SGMII transmission - plus		Connect with a 0.1uF capacitor, close to the PHY side. If unused, keep it open.
SGMII_RX_P	125	AI	SGMII receiving - plus		Connect with a 0.1uF capacitor, close to EC25 module. If unused, keep it open.
SGMII_RX_M	126	AI	SGMII receiving -minus		Connect with a 0.1uF capacitor, close to EC25 module. If unused, keep it open.
Wireless Connectivity Interfaces					
Pin Name	**Pin No.**	**I/O**	**Description**	**DC Characteristics**	**Comment**
SDC1_ DATA3	129	IO	WLAN SDIO data bus D3	V_{OL}max=0.45V V_{OH}min=1.35V V_{IL}min=-0.3V V_{IL}max=0.6V V_{IH}min=1.2V V_{IH}max=2.0V	1.8V power domain. If unused, keep it open.
SDC1_ DATA2	130	IO	WLAN SDIO data bus D2	V_{OL}max=0.45V V_{OH}min=1.35V V_{IL}min=-0.3V V_{IL}max=0.6V V_{IH}min=1.2V V_{IH}max=2.0V	1.8V power domain. If unused, keep it open.

SDC1_ DATA1	131	IO	WLAN SDIO data bus D1	V_{OL}max=0.45V V_{OH}min=1.35V V_{IL}min=-0.3V V_{IL}max=0.6V V_{IH}min=1.2V V_{IH}max=2.0V	1.8V power domain. If unused, keep it open.
SDC1_ DATA0	132	IO	WLAN SDIO data bus D0	V_{OL}max=0.45V V_{OH}min=1.35V V_{IL}min=-0.3V V_{IL}max=0.6V V_{IH}min=1.2V V_{IH}max=2.0V	1.8V power domain. If unused, keep it open.
SDC1_CLK	133	DO	WLAN SDIO bus clock	V_{OL}max=0.45V V_{OH}min=1.35V	1.8V power domain. If unused, keep it open.
SDC1_CMD	134	DO	WLAN SDIO bus command	V_{OL}max=0.45V V_{OH}min=1.35V	1.8V power domain. If unused, keep it open.
PM_ENABLE	127	DO	External power control	V_{OL}max=0.45V V_{OH}min=1.35V	1.8V power domain. If unused, keep it open.
WAKE_ON_ WIRELESS	135	DI	Wake up the host (EC25 module) by FC20 module	V_{IL}min=-0.3V V_{IL}max=0.6V V_{IH}min=1.2V V_{IH}max=2.0V	1.8V power domain. Active low. If unused, keep it open.
WLAN_EN	136	DO	WLAN function control via FC20 module	V_{OL}max=0.45V V_{OH}min=1.35V	1.8V power domain. Active high. Cannot be pulled up before startup. If unused, keep it open.
COEX_UART _RX	137	DI	LTE/WLAN&BT coexistence signal	V_{IL}min=-0.3V V_{IL}max=0.6V V_{IH}min=1.2V V_{IH}max=2.0V	1.8V power domain. Cannot be pulled up before startup. If unused, keep it open.
COEX_UART _TX	138	DO	LTE/WLAN&BT coexistence signal	V_{OL}max=0.45V V_{OH}min=1.35V	1.8V power domain. Cannot be pulled up before startup. If unused, keep it open.
WLAN_SLP_ CLK	118	DO	WLAN sleep clock		If unused, keep it open.

BT_RTS*	37	DI	BT UART request to send	V_{IL}min=-0.3V V_{IL}max=0.6V V_{IH}min=1.2V V_{IH}max=2.0V	1.8V power domain. If unused, keep it open.
BT_TXD*	38	DO	BT UART transmit data	V_{OL}max=0.45V V_{OH}min=1.35V	1.8V power domain. If unused, keep it open.
BT_RXD*	39	DI	BT UART receive data	V_{IL}min=-0.3V V_{IL}max=0.6V V_{IH}min=1.2V V_{IH}max=2.0V	1.8V power domain. If unused, keep it open.
BT_CTS*	40	DO	BT UART clear to send	V_{OL}max=0.45V V_{OH}min=1.35V	1.8V power domain. Cannot be pulled up before startup. If unused, keep it open.
BT_EN*	139	DO	BT function control via the BT module	V_{OL}max=0.45V V_{OH}min=1.35V	1.8V power domain. If unused, keep it open.
RF Interface					
Pin Name	**Pin No.**	**I/O**	**Description**	**DC Characteristics**	**Comment**
ANT_DIV	35	AI	Diversity antenna pad		50Ω impedance If unused, keep it open.
ANT_MAIN	49	IO	Main antenna pad		50Ω impedance
ANT_GNSS	47	AI	GNSS antenna pad		50Ω impedance If unused, keep it open.
GPIO Pins					
Pin Name	**Pin No.**	**I/O**	**Description**	**DC Characteristics**	**Comment**
WAKEUP_IN	1	DI	Sleep mode control	V_{IL}min=-0.3V V_{IL}max=0.6V V_{IH}min=1.2V V_{IH}max=2.0V	1.8V power domain. Cannot be pulled up before startup. Low level wakes up the module. If unused, keep it open.
W_DISABLE#	4	DI	Airplane mode control	V_{IL}min=-0.3V V_{IL}max=0.6V V_{IH}min=1.2V	1.8V power domain. Pull-up by default. At low voltage level,

				V_{IH}max=2.0V	module can enter into airplane mode. If unused, keep it open.
AP_READY	2	DI	Application processor sleep state detection	V_{IL}min=-0.3V V_{IL}max=0.6V V_{IH}min=1.2V V_{IH}max=2.0V	1.8V power domain. If unused, keep it open.
USB_BOOT Interface					
Pin Name	**Pin No.**	**I/O**	**Description**	**DC Characteristics**	**Comment**
USB_BOOT	115	DI	Force the module to enter into emergency download mode	V_{IL}min=-0.3V V_{IL}max=0.6V V_{IH}min=1.2V V_{IH}max=2.0V	1.8V power domain. Cannot be pulled up before startup. It is recommended to reserve test point.
RESERVED Pins					
Pin Name	**Pin No.**	**I/O**	**Description**	**DC Characteristics**	**Comment**
RESERVED	3, 18, 43, 55, 73~84, 113, 114, 116, 117, 140-144.		Reserved		Keep these pins unconnected.

NOTES

1. "*" means under development.
2. Pads 24~27 are multiplexing pins used for audio design on the EC25 module and BT function on the BT module.

3.4. Operating Modes

The table below briefly summarizes the various operating modes referred in the following chapters.

Table 5: Overview of Operating Modes

Mode	Details	
Normal Operation	Idle	Software is active. The module has registered on the network, and it is ready to send and receive data.
	Talk/Data	Network connection is ongoing. In this mode, the power consumption is decided by network setting and data transfer rate.
Minimum Functionality Mode	**AT+CFUN** command can set the module to a minimum functionality mode without removing the power supply. In this case, both RF function and (U)SIM card will be invalid.	
Airplane Mode	**AT+CFUN** command or W_DISABLE# pin can set the module to airplane mode. In this case, RF function will be invalid.	
Sleep Mode	In this mode, the current consumption of the module will be reduced to the minimal level. During this mode, the module can still receive paging message, SMS, voice call and TCP/UDP data from the network normally.	
Power Down Mode	In this mode, the power management unit shuts down the power supply. Software is not active. The serial interface is not accessible. Operating voltage (connected to VBAT_RF and VBAT_BB) remains applied.	

3.5. Power Saving

3.5.1. Sleep Mode

EC25 is able to reduce its current consumption to a minimum value during the sleep mode. The following section describes power saving procedures of EC25 module.

3.5.1.1. UART Application

If the host communicates with module via UART interface, the following preconditions can let the module enter into sleep mode.

- Execute **AT+QSCLK=1** command to enable sleep mode.
- Drive DTR to high level.

The following figure shows the connection between the module and the host.

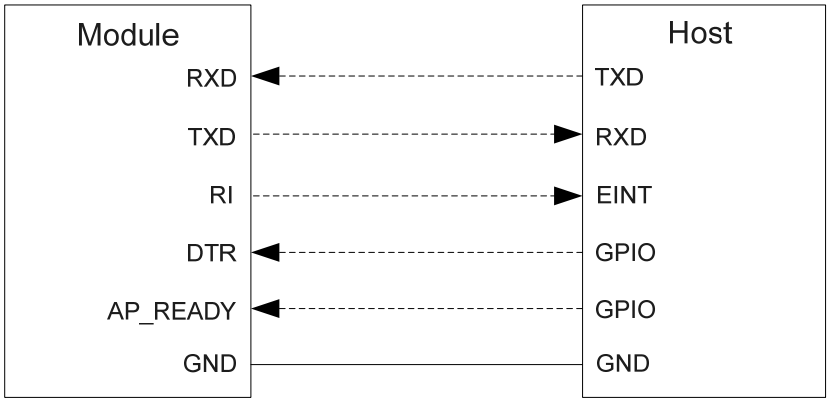

Figure 3: Sleep Mode Application via UART

- Driving the host DTR to low level will wake up the module.
- When EC25 has a URC to report, RI signal will wake up the host. Please refer to ***Chapter 3.17*** for details about RI behaviors.
- AP_READY will detect the sleep state of the host (can be configured to high level or low level detection). Please refer to **AT+QCFG="apready"*** command for details.

NOTE

"*" means under development.

3.5.1.2. USB Application with USB Remote Wakeup Function

If the host supports USB suspend/resume and remote wakeup function, the following three preconditions must be met to let the module enter into the sleep mode.

- Execute **AT+QSCLK=1** command to enable sleep mode.
- Ensure the DTR is held at high level or keep it open.
- The host's USB bus, which is connected with the module's USB interface, enters into suspended state.

The following figure shows the connection between the module and the host.

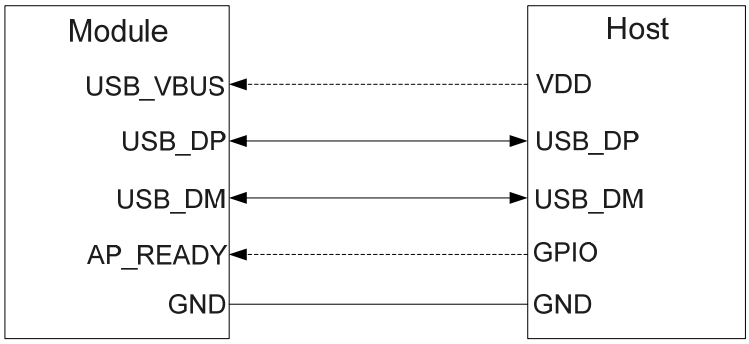

Figure 4: Sleep Mode Application with USB Remote Wakeup

- Sending data to EC25 through USB will wake up the module.
- When EC25 has a URC to report, the module will send remote wake-up signals via USB bus so as to wake up the host.

3.5.1.3. USB Application with USB Suspend/Resume and RI Function

If the host supports USB suspend/resume, but does not support remote wake-up function, the RI signal is needed to wake up the host.

There are three preconditions to let the module enter into the sleep mode.

- Execute **AT+QSCLK=1** command to enable the sleep mode.
- Ensure the DTR is held at high level or keep it open.
- The host's USB bus, which is connected with the module's USB interface, enters into suspended state.

The following figure shows the connection between the module and the host.

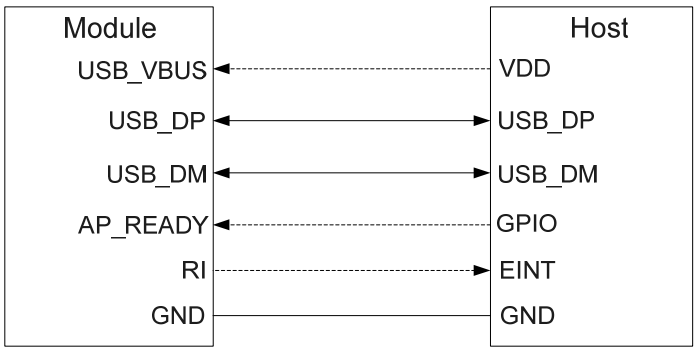

Figure 5: Sleep Mode Application with RI

- Sending data to EC25 through USB will wake up the module.
- When EC25 has a URC to report, RI signal will wake up the host.

3.5.1.4. USB Application without USB Suspend Function

If the host does not support USB suspend function, USB_VBUS should be disconnected via an additional control circuit to let the module enter into sleep mode.

- Execute **AT+QSCLK=1** command to enable sleep mode.
- Ensure the DTR is held at high level or keep it open.
- Disconnect USB_VBUS.

The following figure shows the connection between the module and the host.

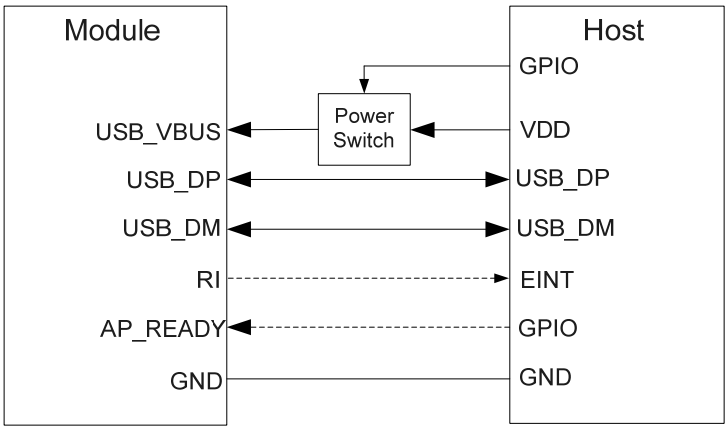

Figure 6: Sleep Mode Application without Suspend Function

Switching on the power switch to supply power to USB_VBUS will wake up the module.

NOTE

Please pay attention to the level match shown in dotted line between the module and the host. For more details about EC25 power management application, please refer to ***document [1]***.

3.5.2. Airplane Mode

When the module enters into airplane mode, the RF function does not work, and all AT commands correlative with RF function will be inaccessible. This mode can be set via the following ways.

Hardware:

The W_DISABLE# pin is pulled up by default; driving it to low level will let the module enter into airplane mode.

Software:

AT+CFUN command provides the choice of the functionality level through setting **<fun>** into 0, 1 or 4.

- **AT+CFUN=0:** Minimum functionality mode. Both (U)SIM and RF functions are disabled.
- **AT+CFUN=1:** Full functionality mode (by default).
- **AT+CFUN=4:** Airplane mode. RF function is disabled.

NOTES

1. The W_DISABLE# control function is disabled in firmware by default. It can be enabled by **AT+QCFG="airplanecontrol"** command, and this command is under development.
2. The execution of **AT+CFUN** command will not affect GNSS function.

3.6. Power Supply

3.6.1. Power Supply Pins

EC25 provides four VBAT pins to connect with the external power supply, and there are two separate voltage domains for VBAT.

- Two VBAT_RF pins for module's RF part
- Two VBAT_BB pins for module's baseband part

The following table shows the details of VBAT pins and ground pins.

Table 6: VBAT and GND Pins

Pin Name	Pin No.	Description	Min.	Typ.	Max.	Unit
VBAT_RF	57, 58	Power supply for module's RF part	3.3	3.8	4.3	V
VBAT_BB	59, 60	Power supply for module's baseband part	3.3	3.8	4.3	V
GND	8, 9, 19, 22, 36, 46, 48, 50~54, 56, 72, 85~112	Ground	-	0	-	V

3.6.2. Decrease Voltage Drop

The power supply range of the module is from 3.3V to 4.3V. Please make sure that the input voltage will never drop below 3.3V. The following figure shows the voltage drop during burst transmission in 2G network. The voltage drop will be less in 3G and 4G networks.

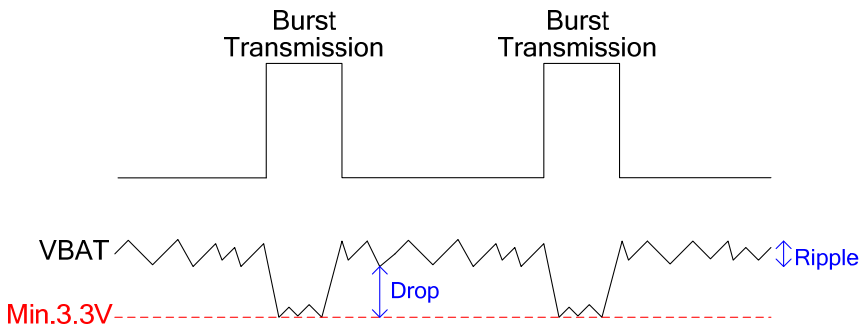

Figure 7: Power Supply Limits during Burst Transmission

To decrease voltage drop, a bypass capacitor of about 100μF with low ESR (ESR=0.7Ω) should be used, and a multi-layer ceramic chip (MLCC) capacitor array should also be reserved due to its ultra-low ESR. It is recommended to use three ceramic capacitors (100nF, 33pF, 10pF) for composing the MLCC array, and place these capacitors close to VBAT_BB/VBAT_RF pins. The main power supply from an external application has to be a single voltage source and can be expanded to two sub paths with star structure. The width of VBAT_BB trace should be no less than 1mm; and the width of VBAT_RF trace should be no less than 2mm. In principle, the longer the VBAT trace is, the wider it will be.

In addition, in order to get a stable power source, it is suggested that a zener diode whose reverse zener voltage is 5.1V and dissipation power is more than 0.5W should be used. The following figure shows the star structure of the power supply.

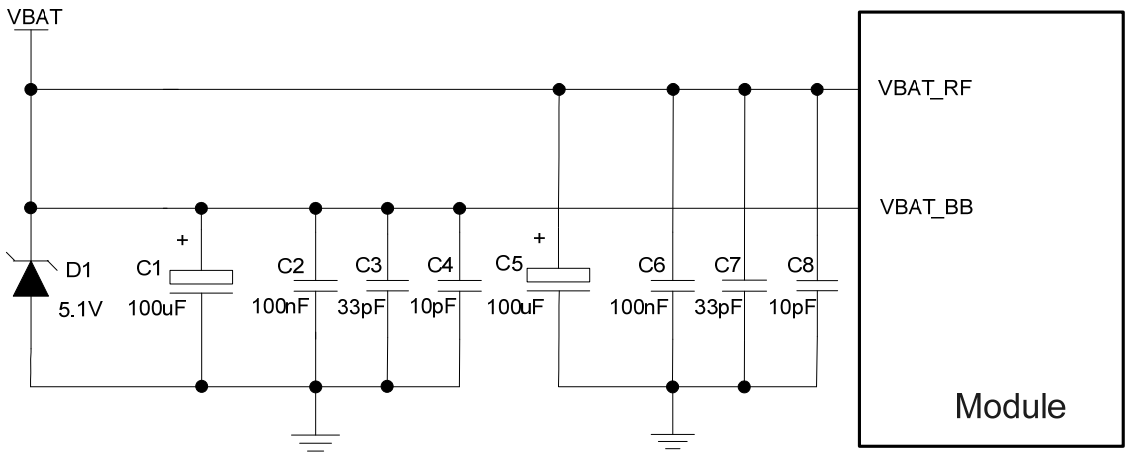

Figure 8: Star Structure of the Power Supply

3.6.3. Reference Design for Power Supply

Power design for the module is very important, as the performance of the module largely depends on the power source. The power supply should be able to provide sufficient current up to 2A at least. If the voltage drop between the input and output is not too high, it is suggested that an LDO should be used to supply power for the module. If there is a big voltage difference between the input source and the desired output (VBAT), a buck converter is preferred to be used as the power supply.

The following figure shows a reference design for +5V input power source. The typical output of the power supplyis about 3.8V and the maximum load current is 3A.

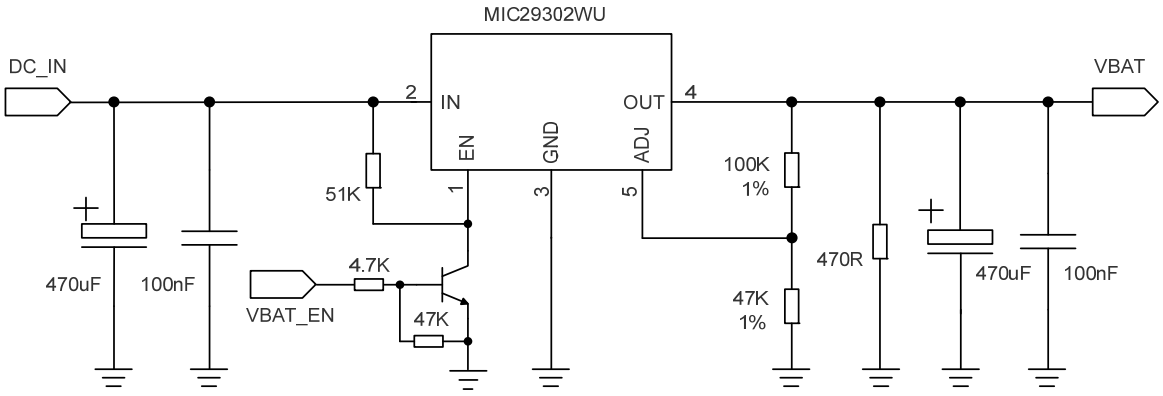

Figure 9: Reference Circuit of Power Supply

NOTE

In order to avoid damaging internal flash, please do not switch off the power supply when the module works normally. Only after the module is shutdown by PWRKEY or AT command, then the power supply can be cut off.

3.6.4. Monitor the Power Supply

AT+CBC command can be used to monitor the VBAT_BB voltage value. For more details, please refer to ***document [2]***.

3.7. Turn on and off Scenarios

3.7.1. Turn on Module Using the PWRKEY

The following table shows the pin definition of PWRKEY.

Table 7: Pin Definition of PWRKEY

Pin Name	Pin No.	I/O	Description	Comment
PWRKEY	21	DI	Turn on/off the module	The output voltage is 0.8V because of the diode drop in the Qualcomm chipset.

When EC25 is in power down mode, it can be turned on to normal mode by driving the PWRKEY pin to a low level for at least 500ms. It is recommended to use an open drain/collector driver to control the PWRKEY. After STATUS pin (require external pull-up) outputting a low level, PWRKEY pin can be released. A simple reference circuit is illustrated in the following figure.

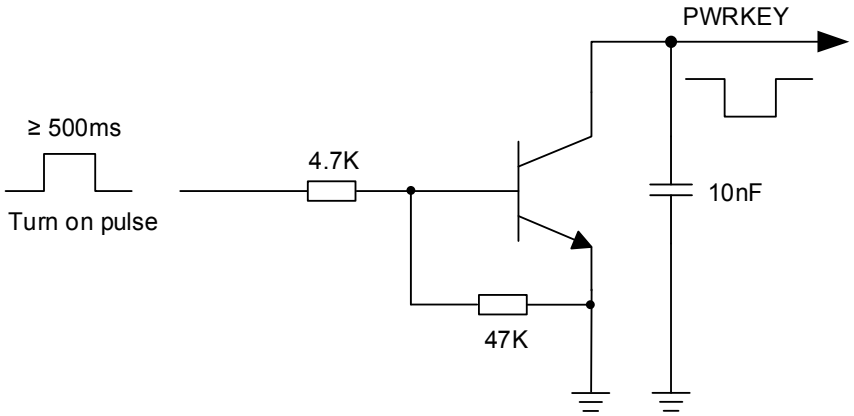

Figure 10: Turn on the Module by Using Driving Circuit

The other way to control the PWRKEY is using a button directly. When pressing the key, electrostatic strike may generate from finger. Therefore, a TVS component is indispensable to be placed nearby the button for ESD protection. A reference circuit is shown in the following figure.

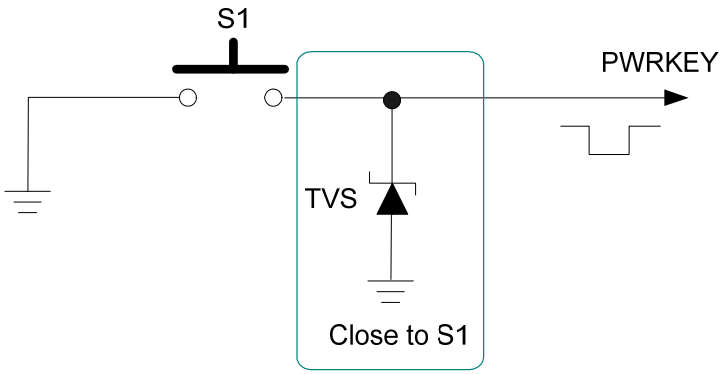

Figure 11: Turn on the Module by Using Button

The turn on scenario is illustrated in the following figure.

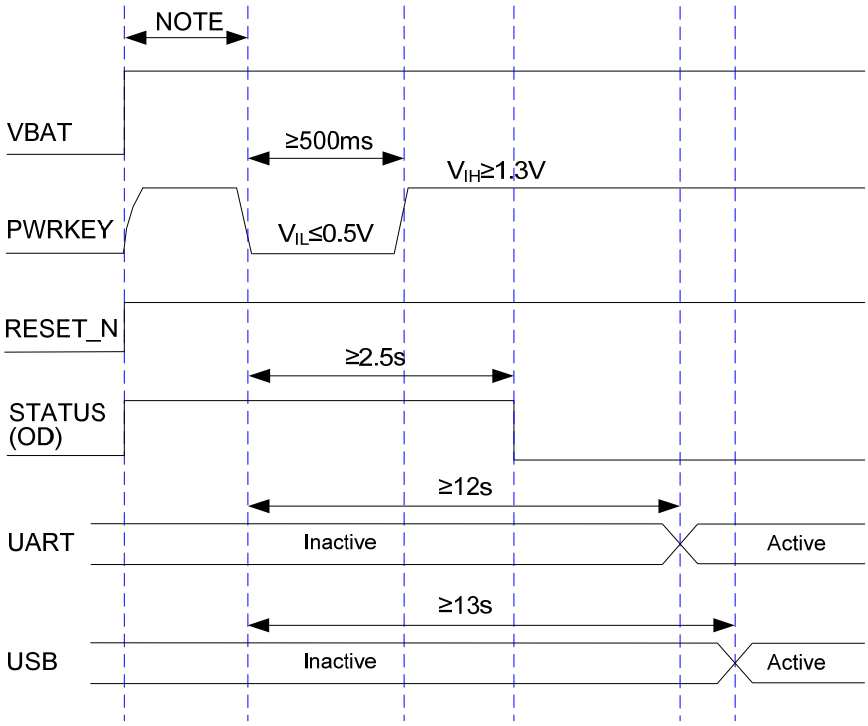

Figure 12: Timing of Turning on Module

NOTE

Please make sure that VBAT is stable before pulling down PWRKEY pin. The time between them should be no no less than 30ms.

3.7.2. Turn off Module

The following procedures can be used to turn off the module:

- Normal power down procedure: Turn off the module using the PWRKEY pin.
- Normal power down procedure: Turn off the module using **AT+QPOWD** command.

3.7.2.1. Turn off Module Using the PWRKEY Pin

Driving the PWRKEY pin to a low level voltage for at least 650ms, the module will execute power-down procedure after the PWRKEY is released. The power-down scenario is illustrated in the following figure.

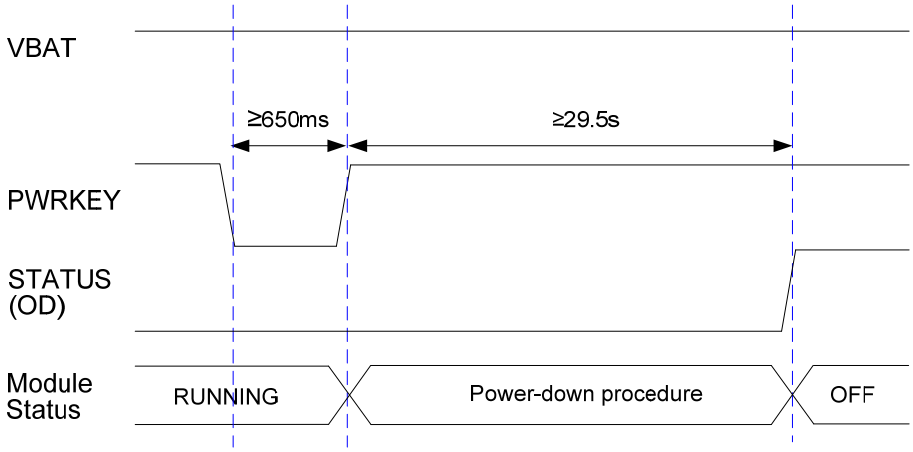

Figure 13: Timing of Turning off Module

3.7.2.2. Turn off Module Using AT Command

It is also a safe way to use **AT+QPOWD** command to turn off the module, which is similar to turning off the module via PWRKEY pin.

Please refer to ***document [2]*** for details about **AT+QPOWD** command.

NOTES

1. Inorder to avoid damaging internal flash, please do not switch off the power supply when the module works normally. Only after the module is shut down by PWRKEY or AT command, then the power supply can be cut off.
2. When turn off module with AT command, please keep PWRKEY at high level after the execution of power-off command. Otherwise the module will be turned on again after successfully turn-off.

3.8. Reset the Module

The RESET_N pin can be used to reset the module. The module can be reset by driving RESET_N to a low level voltage for time between 150ms and 460ms.

Table 8: RESET_N Pin Description

Pin Name	Pin No.	I/O	Description	Comment
RESET_N	20	DI	Reset the module	1.8V power domain

The recommended circuit is similar to the PWRKEY control circuit. An open drain/collector driver or button can be used to control the RESET_N.

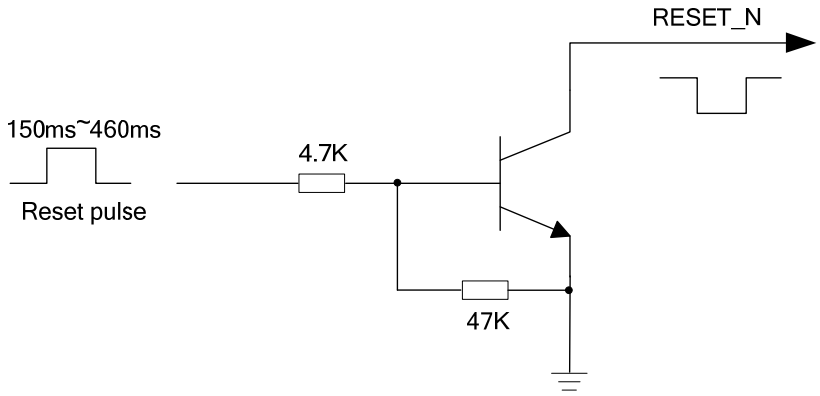

Figure 14: Reference Circuit of RESET_N by Using Driving Circuit

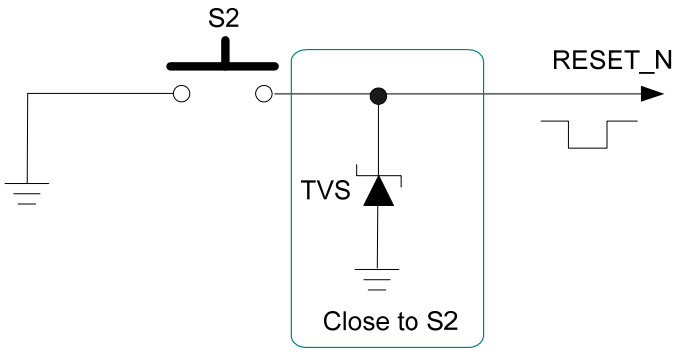

Figure 15: Reference Circuit of RESET_N by Using Button

The reset scenario is illustrated inthe following figure.

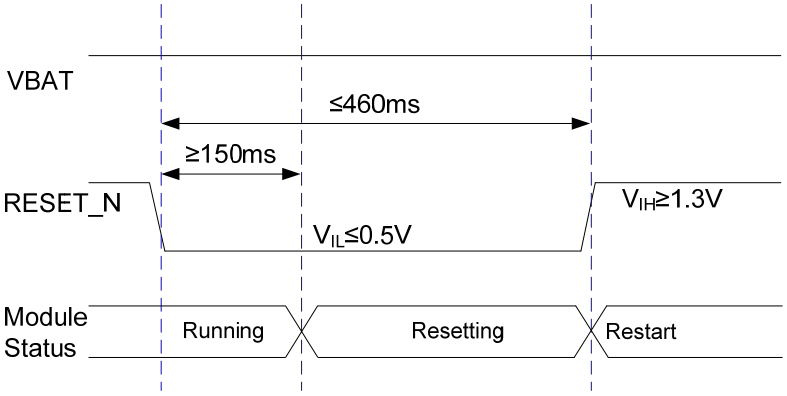

Figure 16: Timing of Resetting Module

NOTES

1. Use RESET_N only when turning off the module by **AT+QPOWD** command and PWRKEY pin failed.
2. Ensure that there is no large capacitance on PWRKEY and RESET_N pins.

3.9. (U)SIM Interface

The(U)SIM interface circuitry meets ETSI and IMT-2000 requirements. Both 1.8V and 3.0V (U)SIM cards are supported.

Table 9: Pin Definition of the (U)SIM Interface

Pin Name	Pin No.	I/O	Description	Comment
USIM_VDD	14	PO	Power supply for (U)SIM card	Either 1.8V or 3.0V is supported by the module automatically.
USIM_DATA	15	IO	Data signal of (U)SIM card	
USIM_CLK	16	DO	Clock signal of (U)SIM card	
USIM_RST	17	DO	Reset signal of (U)SIM card	
USIM_ PRESENCE	13	DI	(U)SIM card insertion detection	
USIM_GND	10		Specified ground for (U)SIM card	

EC25 supports (U)SIM card hot-plug via the USIM_PRESENCE pin. The function supports low level and high level detections, and it is disabled by default. Please refer to ***document [2]*** for more details about **AT+QSIMDET** command.

The following figure shows a reference design for (U)SIM interface with an 8-pin (U)SIM card connector.

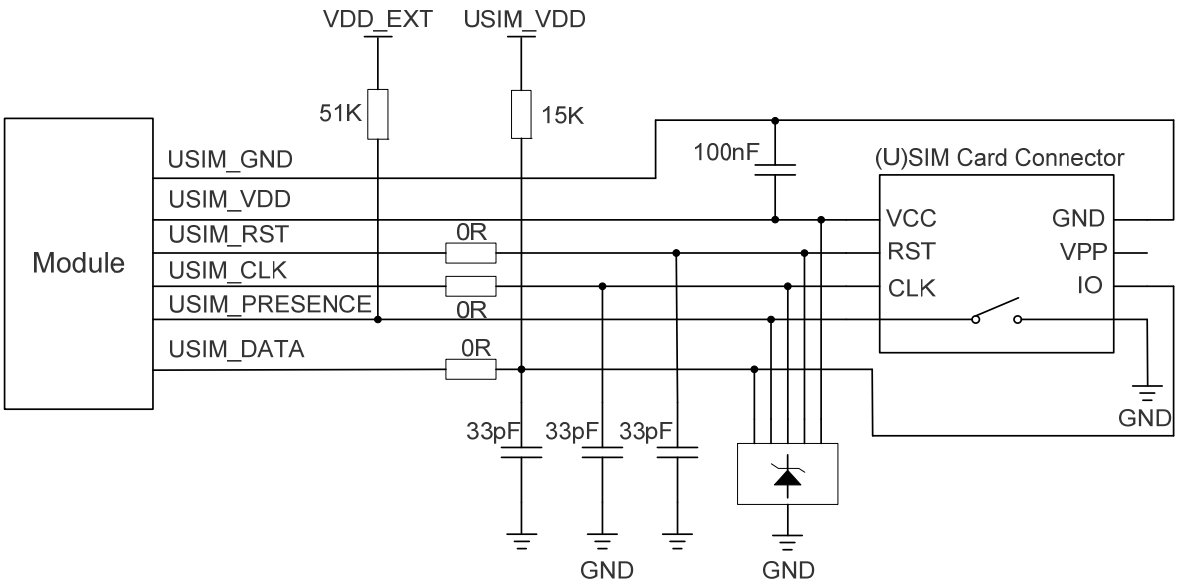

Figure 17: Reference Circuit of (U)SIM Interface with an 8-Pin (U)SIM Card Connector

If (U)SIM card detection function is not needed, please keep USIM_PRESENCE unconnected. A reference circuit for (U)SIM interface with a 6-pin (U)SIM card connector is illustrated in the following figure.

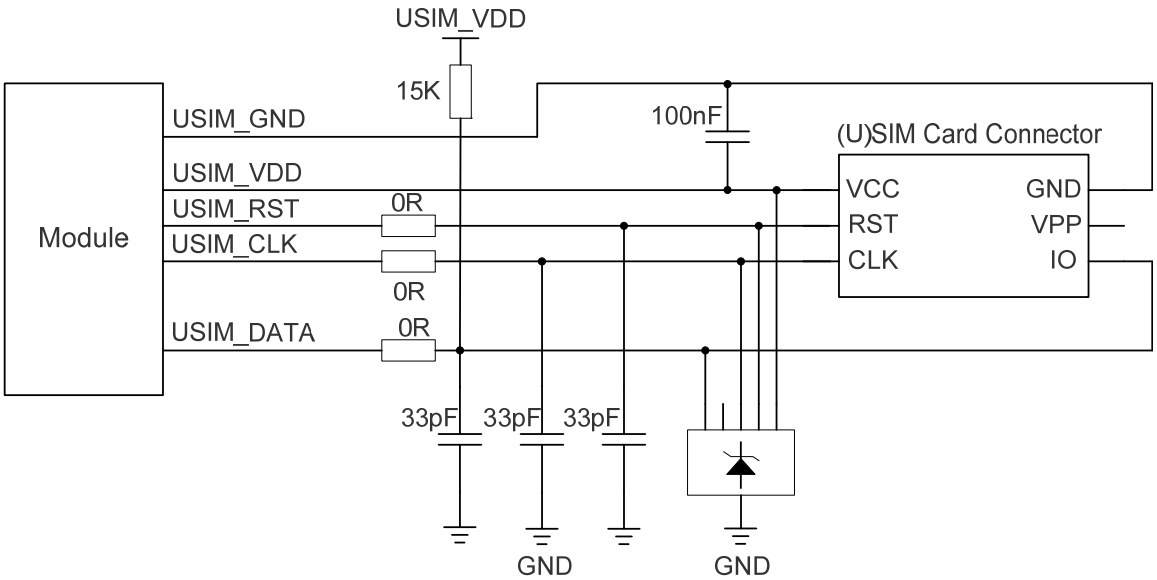

Figure 18: Reference Circuit of (U)SIM Interface with a 6-Pin (U)SIM Card Connector

In order to enhance the reliability and availability of the (U)SIM card in customers' applications, please follow the criteria below in (U)SIM circuit design:

- Keep placement of (U)SIM card connector to the module as close as possible. Keep the trace length as less than 200mm as possible.
- Keep (U)SIM card signals away from RF and VBAT traces.
- Assure the ground between the module and the (U)SIM card connector short and wide. Keep the trace width of ground and USIM_VDD no less than 0.5mm to maintain the same electric potential. Make sure the bypass capacitor between USIM_VDD and USIM_GND less than 1uF, and place it as close to (U)SIM card connector as possible. If the ground is complete on customers' PCB, USIM_GND can be connected to PCB ground directly.
- To avoid cross-talk between USIM_DATA and USIM_CLK, keep them away from each other and shield them with surrounded ground.
- In order to offer good ESD protection, it is recommended to add a TVS diode array whose parasitic capacitance should not be more than 15pF. The 0Ω resistors should be added in series between the module and the (U)SIM card to facilitate debugging. The 33pF capacitors are used for filtering interference of EGSM900. Please note that the (U)SIM peripheral circuit should be close to the (U)SIM card connector.
- The pull-up resistor on USIM_DATA line can improve anti-jamming capability when long layout trace and sensitive occasion are applied, and it should be placed close to the (U)SIM card connector.

3.10. USB Interface

EC25 contains one integrated Universal Serial Bus (USB) interface which complies with the USB 2.0 specification and supports high-speed (480Mbps) and full-speed (12Mbps) modes. The USB interface is used for AT command communication, data transmission, GNSS NMEA sentences output, software debugging, firmware upgrade and voice over USB*. The following table shows the pin definition of USB interface.

Table 10: Pin Description of USB Interface

Pin Name	Pin No.	I/O	Description	Comment
USB_DP	69	IO	USB differential data bus (+)	Require differential impedance of 90Ω
USB_DM	70	IO	USB differential data bus (-)	Require differential impedance of 90Ω
USB_VBUS	71	PI	USB connection detection	Typical 5.0V
GND	72		Ground	

For more details about the USB 2.0 specifications, please visit http://www.usb.org/home.

The USB interface is recommended to be reserved for firmware upgrade in customers' designs. The following figure shows a reference circuit of USB interface.

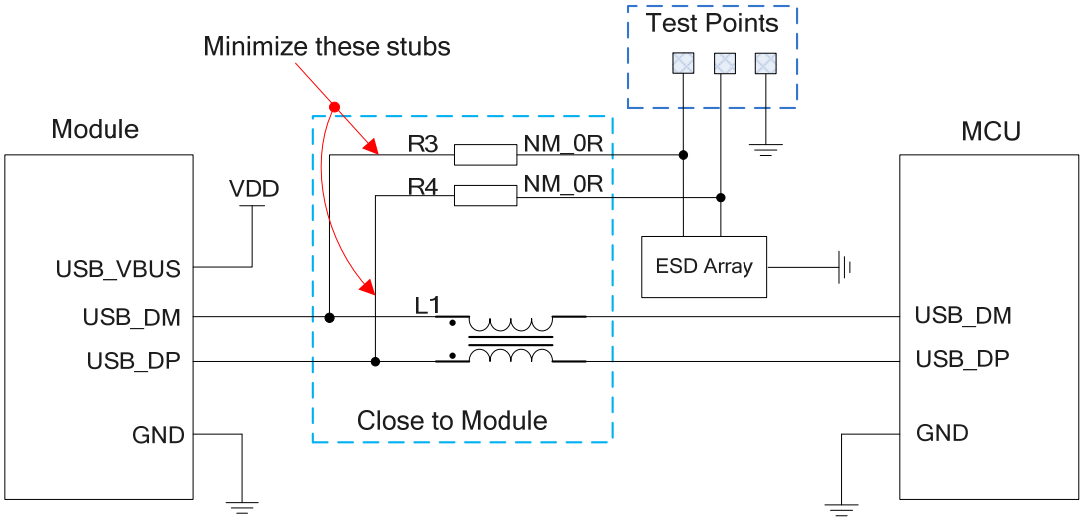

Figure 19: Reference Circuit of USB Application

A common mode choke L1 is recommended to be added in series between the module and customer's MCU in order to suppress EMI spurious transmission. Meanwhile, the 0Ω resistors (R3 and R4) should be added in series between the module and the test points so as to facilitate debugging, and the resistors are not mounted by default. In order to ensure the integrity of USB data line signal, L1/R3/R4 components must be placed close to the module, and also these resistors should be placed close to each other. The extra stubs of trace must be as short as possible.

The following principles should be complied with when design the USB interface, so as to meet USB 2.0 specification.

- It is important to route the USB signal traces as differential pairs with total grounding. The impedance of USB differential trace is 90Ω.
- Do not route signal traces under crystals, oscillators, magnetic devices and RF signal traces. It is important to route the USB differential traces in inner-layer with ground shielding on not only upper and lower layers but also right and left sides.
- Pay attention to the influence of junction capacitance of ESD protection components on USB data lines. Typically, the capacitance value should be less than 2pF.
- Keep the ESD protection components to the USB connector as close as possible.

NOTES

1. EC25 module can only be used as a slave device.
2. "*" means under development.

3.11. UART Interfaces

The module provides two UART interfaces: the main UART interface and the debug UART interface. The following shows their features.

- The main UART interface supports 4800bps, 9600bps, 19200bps, 38400bps, 57600bps, 115200bps, 230400bps, 460800bps and 921600bps baud rates, and the default is 115200bps. This interface is used for data transmission and AT command communication.
- The debug UART interface supports 115200bps baud rate. It is used for Linux console and log output.

The following tables show the pin definition of the UART interfaces.

Table 11: Pin Definition of Main UART Interface

Pin Name	Pin No.	I/O	Description	Comment
RI	62	DO	Ring indicator	1.8V power domain
DCD	63	DO	Data carrier detection	
CTS	64	DO	Clear to send	
RTS	65	DI	Request to send	
DTR	66	DI	Data terminal ready	
TXD	67	DO	Transmit data	
RXD	68	DI	Receive data	

Table 12: Pin Definition of Debug UART Interface

Pin Name	Pin No.	I/O	Description	Comment
DBG_TXD	12	DO	Transmit data	1.8V power domain
DBG_RXD	11	DI	Receive data	

The logic levels are described in the following table.

Table 13: Logic Levels of Digital I/O

Parameter	Min.	Max.	Unit
V_{IL}	-0.3	0.6	V
V_{IH}	1.2	2.0	V
V_{OL}	0	0.45	V
V_{OH}	1.35	1.8	V

The module provides 1.8V UART interface. A level translator should be used if customers' application is equipped with a 3.3V UART interface. A level translator TXS0108EPWR provided by *Texas Instruments* is recommended. The following figure shows a reference design.

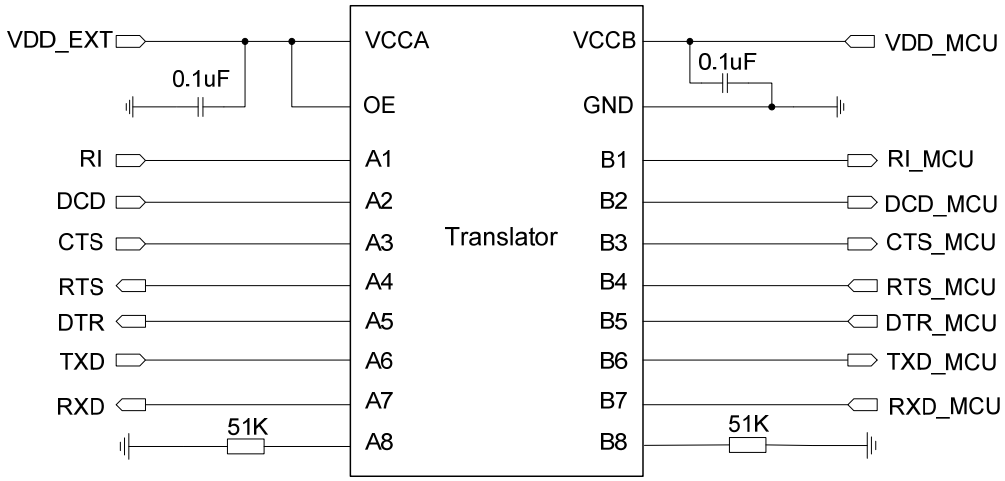

Figure 20: Reference Circuit with Translator Chip

Please visit http://www.ti.com for more information.

Another example with transistor translation circuit is shown as below. The circuit design of dotted line section can refer to the design of solid line section, in terms of both module's input and output circuit designs, but please pay attention to the direction of connection.

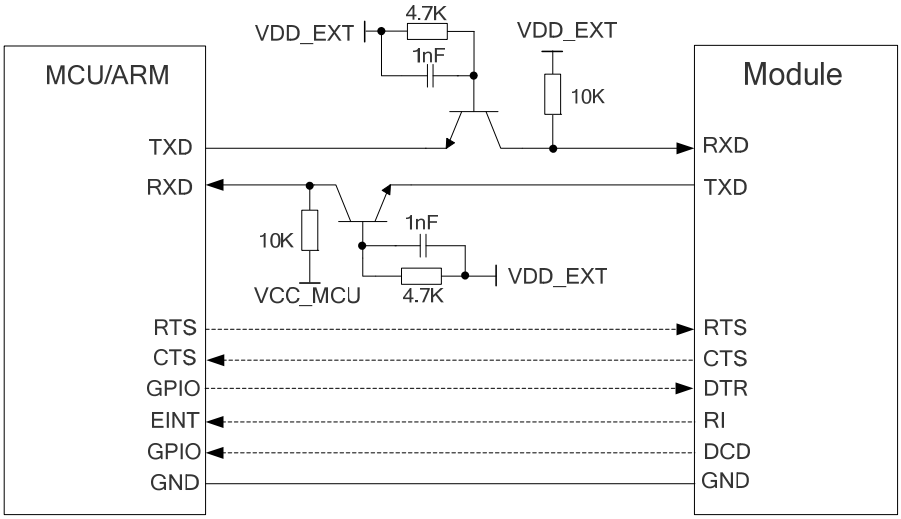

Figure 21: Reference Circuit with Transistor Circuit

NOTE

Transistor circuit solution is not suitable for applications with high baud rates exceeding 460Kbps.

3.12. PCM and I2C Interfaces

EC25 provides one Pulse Code Modulation (PCM) digital interface for audio design, which supports the following modes and one I2C interface:

- Primary mode (short frame synchronization, works as both master and slave)
- Auxiliary mode (long frame synchronization, works as master only)

In primary mode, the data is sampled on the falling edge of the PCM_CLK and transmitted on the rising edge. The PCM_SYNC falling edge represents the MSB. In this mode, the PCM interface supports 256kHz, 512kHz, 1024kHz or 2048kHz PCM_CLK at 8kHz PCM_SYNC, and also supports 4096kHz PCM_CLK at 16kHz PCM_SYNC.

In auxiliary mode, the data is sampled on the falling edge of the PCM_CLK and transmitted on the rising edge. The PCM_SYNC rising edge represents the MSB. In this mode, the PCM interface operates with a 256kHz, 512kHz, 1024kHz or 2048kHz PCM_CLK and an 8kHz, 50% duty cycle PCM_SYNC.

EC25 supports 16-bit linear data format. The following figures show the primary mode's timing relationship with 8KHz PCM_SYNC and 2048KHz PCM_CLK, as well as the auxiliary mode's timing relationship with 8KHz PCM_SYNC and 256KHz PCM_CLK.

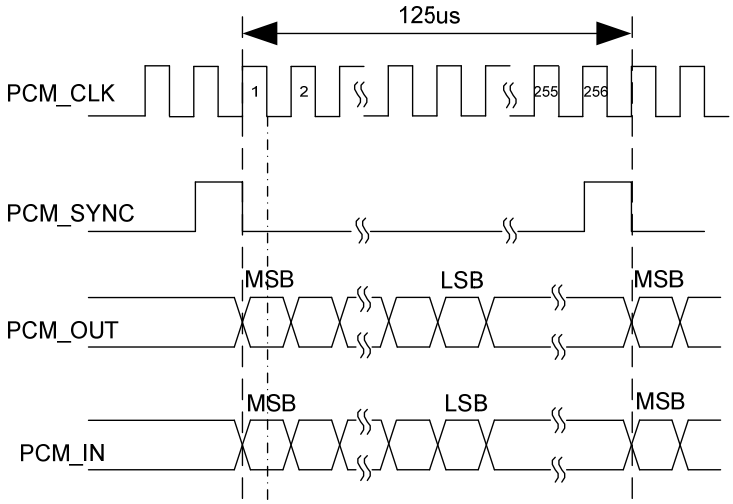

Figure 22: Primary Mode Timing

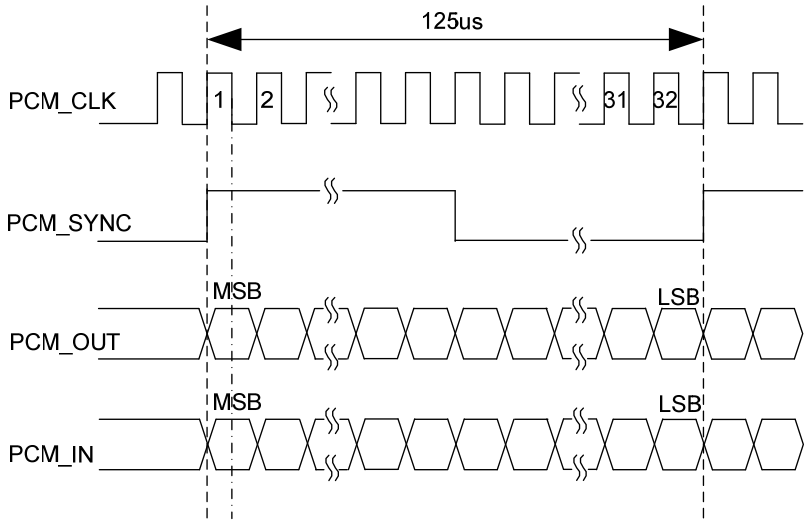

Figure 23: Auxiliary Mode Timing

The following table shows the pin definition of PCM and I2C interfaces which can be applied on audio codec design.

Table 14: Pin Definition of PCM and I2C Interfaces

Pin Name	Pin No.	I/O	Description	Comment
PCM_IN	24	DI	PCM data input	1.8V power domain

PCM_OUT	25	DO	PCM data output	1.8V power domain
PCM_SYNC	26	IO	PCM data frame synchronization signal	1.8V power domain
PCM_CLK	27	IO	PCM data bit clock	1.8V power domain
I2C_SCL	41	OD	I2C serial clock	Require external pull-up to 1.8V
I2C_SDA	42	OD	I2C serial data	Require external pull-up to 1.8V

Clock and mode can be configured by AT command, and the default configuration is master mode using short frame synchronization format with 2048KHz PCM_CLK and 8KHz PCM_SYNC. Please refer to ***document [2]*** for more details about **AT+QDAI** command.

The following figure shows a reference design of PCM interface with external codec IC.

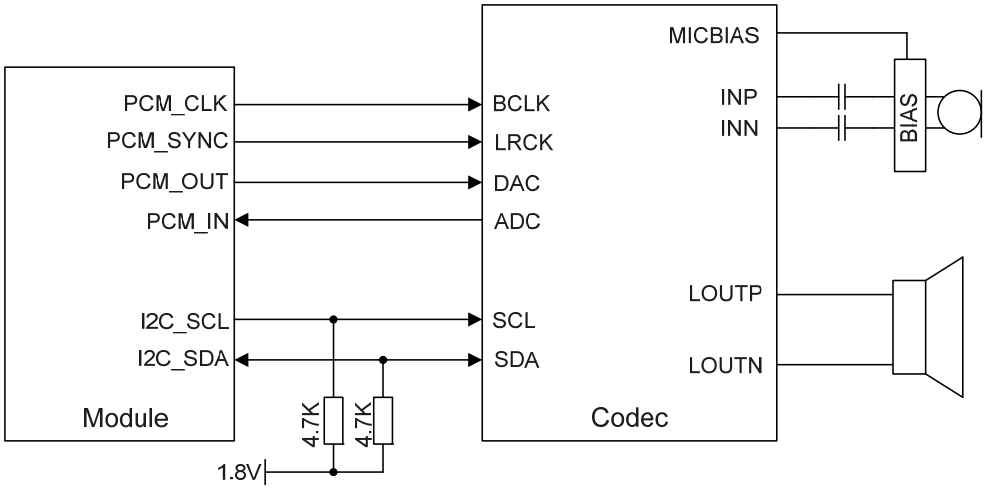

Figure 24: Reference Circuit of PCM Application with Audio Codec

NOTES

1. It is recommended to reserve an RC (R=22Ω, C=22pF) circuits on the PCM lines, especially for PCM_CLK.
2. EC25 works as a master device pertaining to I2C interface.

3.13. SD Card Interface

EC25 supports SDIO 3.0 interface for SD card.

The following table shows the pin definition of SD card interface.

Table 15: Pin Definition of SD Card Interface

Pin Name	Pin No.	I/O	Description	Comment
SDC2_DATA3	28	IO	SD card SDIO bus DATA3	SDIO signal level can be selected according to SD card supported level, please refer to SD 3.0 protocol for more details. If unused, keep it open.
SDC2_DATA2	29	IO	SD card SDIO bus DATA2	SDIO signal level can be selected according to SD card supported level, please refer to SD 3.0 protocol for more details. If unused, keep it open.
SDC2_DATA1	30	IO	SD card SDIO bus DATA1	SDIO signal level can be selected according to SD card supported level, please refer to SD 3.0 protocol for more details. If unused, keep it open.
SDC2_DATA0	31	IO	SD card SDIO bus DATA0	SDIO signal level can be selected according to SD card supported level, please refer to SD 3.0 protocol for more details. If unused, keep it open.
SDC2_CLK	32	DO	SD card SDIO bus clock	SDIO signal level can be selected according to SD card supported level, please refer to SD 3.0 protocol for more details. If unused, keep it open.
SDC2_CMD	33	IO	SD card SDIO bus command	SDIO signal level can be selected according to SD

				card supported level, please refer to SD 3.0 protocol for more details. If unused, keep it open.
VDD_SDIO	34	PO	SD card SDIO bus pull up power	1.8V/2.85V configurable. Cannot be used for SD card power. If unused, keep it open.
SD_INS_DET	23	DI	SD card insertion detection	1.8V power domain. If unused, keep it open.

The following figure shows a reference design of SD card.

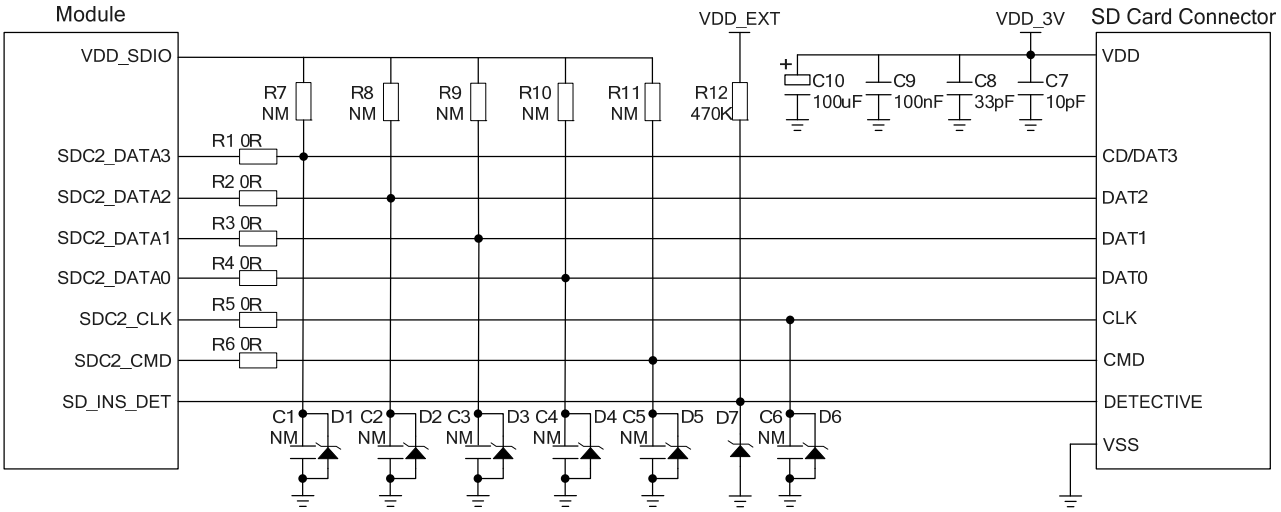

Figure 25: Reference Circuit of SD card

In SD card interface design, in order to ensure good communication performance with SD card, the following design principles should be complied with:

- SD_INS_DET must be connected.
- The voltage range of SD card power supply VDD_3V is 2.7V~3.6V and a sufficient current up to 0.8A should be provided. As the maximum output current of VDD_SDIO is 50mA which can only be used for SDIO pull-up resistors, an externally power supply is needed for SD card.
- To avoid jitter of bus, resistors R7~R11 are needed to pull up the SDIO to VDD_SDIO. Value of these resistors is among 10KΩ~100KΩ and the recommended value is 100KΩ. VDD_SDIO should be used as the pull-up power.
- In order to adjust signal quality, it is recommended to add 0Ω resistors R1~R6 in series between the module and the SD card. The bypass capacitors C1~C6 are reserved and not mounted by default. All resistors and bypass capacitors should be placed close to the module.
- In order to offer good ESD protection, it is recommended to add a TVS diode on SD card pins near the SD card connector with junction capacitance less than 15pF.

- Keep SDIO signals far away from other sensitive circuits/signals such as RF circuits, analog signals, etc., as well as noisy signals such as clock signals, DCDC signals, etc.
- It is important to route the SDIO signal traces with total grounding. The impedance of SDIO data trace is 50Ω (±10%).
- Make sure the adjacent trace spacing is two times of the trace width and the load capacitance of SDIO bus should be less than 15pF.
- It is recommended to keep the trace length difference between CLK and DATA/CMD less than 1mm and the total routing length less than 50mm. The total trace length inside the module is 27mm, so the exterior total trace length should be less than 23mm.

3.14. ADC Interfaces

The module provides two analog-to-digital converter (ADC) interfaces. **AT+QADC=0** command can be used to read the voltage value on ADC0 pin. **AT+QADC=1** command can be used to read the voltage value on ADC1 pin. For more details about these AT commands, please refer to ***document [2]***.

In order to improve the accuracy of ADC, the trace of ADC should be surrounded by ground.

Table 16: Pin Definition of ADC Interfaces

Pin Name	Pin No.	Description
ADC0	45	General purpose analog to digital converter
ADC1	44	General purpose analog to digital converter

The following table describes the characteristic of ADC function.

Table 17: Characteristic of ADC

Parameter	Min.	Typ.	Max.	Unit
ADC0 Voltage Range	0.3		VBAT_BB	V
ADC1 Voltage Range	0.3		VBAT_BB	V
ADC Resolution		15		Bits

NOTES

1. ADC input voltage must not exceed VBAT_BB.
2. It is prohibited to supply any voltage to ADC pins when VBAT is removed.
3. It is recommended to use a resistor divider circuit for ADC application.

3.15. Network Status Indication

The network indication pins can be used to drive network status indication LEDs. The module provides two pins which are NET_MODE and NET_STATUS. The following tables describe the pin definition and logic level changes in different network status.

Table 18: Pin Definition of Network Connection Status/Activity Indicator

Pin Name	Pin No.	I/O	Description	Comment
NET_MODE	5	DO	Indicate the module network registration mode.	1.8V power domain Cannot be pulled up before startup
NET_STATUS	6	DO	Indicate the module network activity status.	1.8V power domain

Table 19: Working State of the Network Connection Status/Activity Indicator

Pin Name	Logic Level Changes	Network Status
NET_MODE	Always High	Registered on LTE network
	Always Low	Others
NET_STATUS	Flicker slowly (200ms High/1800ms Low)	Network searching
	Flicker slowly (1800ms High/200ms Low)	Idle
	Flicker quickly (125ms High/125ms Low)	Data transfer is ongoing
	Always High	Voice calling

A reference circuit is shown in the following figure.

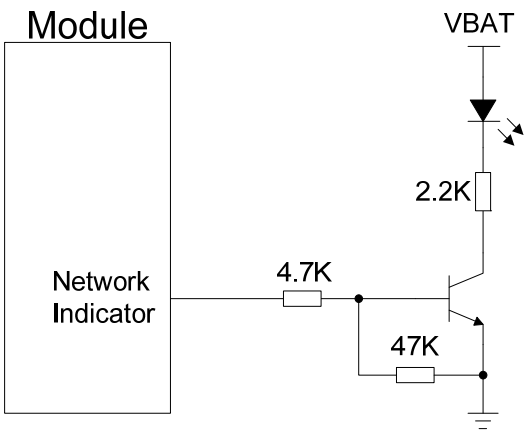

Figure 26: Reference Circuit of the Network Indicator

3.16. STATUS

The STATUS pin is an open drain output for indicating the module's operation status. It can be connected to a GPIO of DTE with a pull-up resistor, or as LED indication circuit as below. When the module is turned on normally, the STATUS will present the low state. Otherwise, the STATUS will present high-impedance state.

Table 20: Pin Definition of STATUS

Pin Name	Pin No.	I/O	Description	Comment
STATUS	61	OD	Indicate the module's operation status	An external pull-up resistor is required. If unused, keep it open.

The following figure shows different circuit designs of STATUS, and customers can choose either one according to customers' application demands.

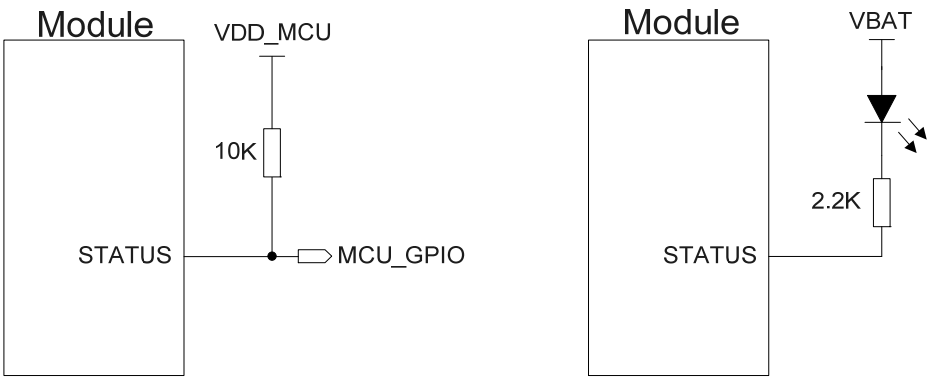

Figure 27: Reference Circuits of STATUS

3.17. Behaviors of RI

AT+QCFG="risignaltype","physical" command can be used to configure RI behavior.

No matter on which port URC is presented, URC will trigger the behavior of RI pin.

NOTE

URC can be outputted from UART port, USB AT port and USB modem port through configuration via **AT+QURCCFG** command. The default port is USB AT port.

In addition, RI behavior can be configured flexibly. The default behavior of the RI is shown as below.

Table 21: Behavior of RI

State	Response
Idle	RI keeps at high level
URC	RI outputs 120ms low pulse when a new URC returns

The RI behavior can be changed by **AT+QCFG="urc/ri/ring"** command. Please refer to ***document [2]*** for details.

3.18. SGMII Interface

EC25 includes an integrated Ethernet MAC with an SGMII interface and two management interfaces, key features of the SGMII interface are shown below:

- IEEE802.3 compliance
- Support 10M/100M/1000M Ethernet work mode
- Support maximum 150Mbps (DL)/50Mbps (UL) for 4G network
- Support VLAN tagging
- Support IEEE1588 and Precision Time Protocol (PTP)
- Can be used to connect to external Ethernet PHY like AR8033, or to an external switch
- Management interfaces support dual voltage 1.8V/2.85V

The following table shows the pin definition of SGMII interface.

Table 22: Pin Definition of the SGMII Interface

Pin Name	Pin No.	I/O	Description	Comment
Control Signal Part				
EPHY_RST_N	119	DO	Ethernet PHY reset	1.8V/2.85V power domain
EPHY_INT_N	120	DI	Ethernet PHY interrupt	1.8V power domain
SGMII_MDATA	121	IO	SGMII MDIO (Management Data Input/Output) data	1.8V/2.85V power domain
SGMII_MCLK	122	DO	SGMII MDIO (Management Data Input/Output) clock	1.8V/2.85V power domain
USIM2_VDD	128	PO	SGMII MDIO pull-up power source	Configurable power source. 1.8V/2.85V power domain. External pull-up power source for SGMII MDIO pins.
SGMII Signal Part				
SGMII_TX_M	123	AO	SGMII transmission-minus	Connect with a 0.1uF capacitor, close to the PHY side.
SGMII_TX_P	124	AO	SGMII transmission-plus	Connect with a 0.1uF capacitor, close to the PHY side.
SGMII_RX_P	125	AI	SGMII receiving-plus	Connect with a 0.1uF capacitor, close to EC25 module.
SGMII_RX_M	126	AI	SGMII receiving-minus	Connect with a 0.1uF capacitor, close to EC25 module.

The following figure shows the simplified block diagram for Ethernet application.

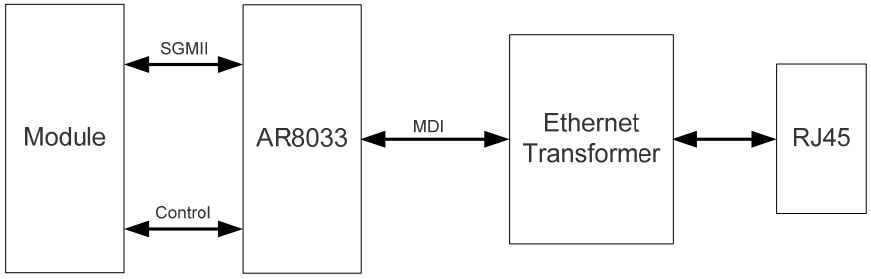

Figure 28: Simplified Block Diagram for Ethernet Application

The following figure shows a reference design of SGMII interface with PHY AR8033 application.

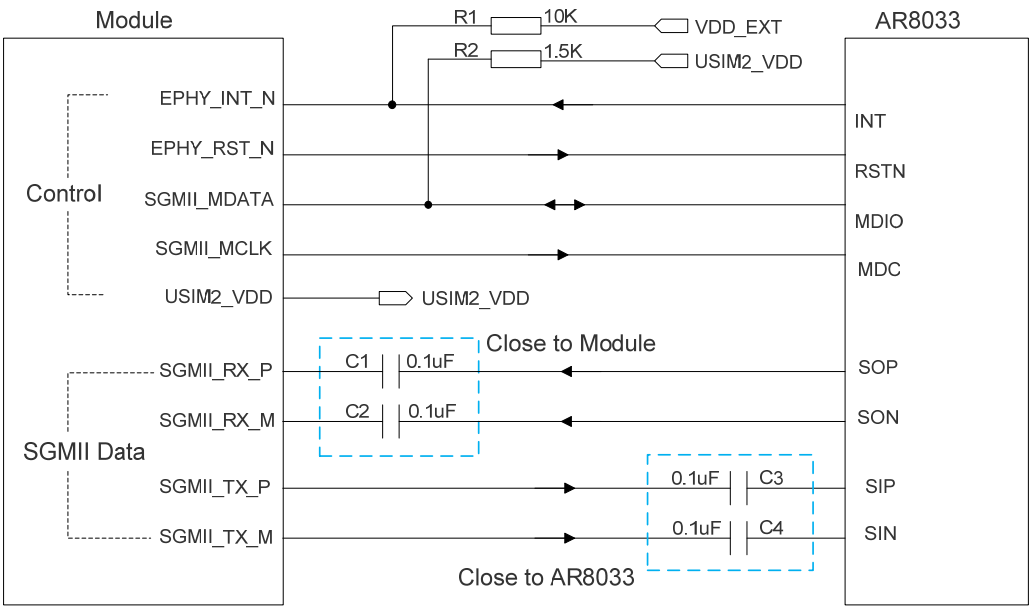

Figure 29: Reference Circuit of SGMII Interface with PHY AR8033 Application

In order to enhance the reliability and availability in customers' applications, please follow the criteria below in the Ethernet PHY circuit design:

- Keep SGMII data and control signals away from other sensitive circuits/signals such as RF circuits, analog signals, etc., as well as noisy signals such as clock signals, DCDC signals, etc.
- Keep the maximum trace length less than 10-inch and keep skew on the differential pairs less than 20mil.
- The differential impedance of SGMII data trace is 100Ω±10%, and the reference ground of the area should be complete.
- Make sure the trace spacing between SGMII RX and TX is at least 3 times of the trace width, and the same to the adjacent signal traces.

3.19. Wireless Connectivity Interfaces

EC25 supports a low-power SDIO 3.0 interface for WLAN and a UART/PCM interface for BT.

The following table shows the pin definition of wireless connectivity interfaces.

Table 23: Pin Definition of Wireless Connectivity Interfaces

Pin Name	Pin No.	I/O	Description	Comment
WLAN Part				
SDC1_DATA3	129	IO	WLAN SDIO data bus D3	1.8V power domain
SDC1_DATA2	130	IO	WLAN SDIO data bus D2	1.8V power domain
SDC1_DATA1	131	IO	WLAN SDIO data bus D1	1.8V power domain
SDC1_DATA0	132	IO	WLAN SDIO data bus D0	1.8V power domain
SDC1_CLK	133	DO	WLAN SDIO bus clock	1.8V power domain
SDC1_CMD	134	IO	WLAN SDIO bus command	1.8V power domain
WLAN_EN	136	DO	WLAN function control via FC20 module.	1.8V power domain. Active high. Cannot be pulled up before startup.
Coexistence and Control Part				
PM_ENABLE	127	DO	External power control	1.8V power domain Active high.
WAKE_ON_ WIRELESS	135	DI	Wake up the host (EC25 module) by FC20 module	1.8V power domain
COEX_UART_RX	137	DI	LTE/WLAN&BT coexistence signal	1.8V power domain. Cannot be pulled up before startup.
COEX_UART_TX	138	DO	LTE/WLAN&BT coexistence signal	1.8V power domain. Cannot be pulled up before startup.
WLAN_SLP_CLK	118	DO	WLAN sleep clock	
BT Part*				
BT_RTS*	37	DI	BT UART request to send	1.8V power domain
BT_TXD*	38	DO	BT UART transmit data	1.8V power domain

BT_RXD*	39	DI	BT UART receive data	1.8V power domain
BT_CTS*	40	DO	BT UART clear to send	1.8V power domain. Cannot be pulled up before startup.
PCM_IN[1)]	24	DI	PCM data input	1.8V power domain
PCM_OUT[1)]	25	DO	PCM data output	1.8V power domain
PCM_SYNC[1)]	26	IO	PCM data frame synchronization signal	1.8V power domain
PCM_CLK[1)]	27	IO	PCM data bit clock	1.8V power domain
BT_EN*	139	DO	BT function control via BT module.	1.8V power domain Active high.

The following figure shows a reference design of wireless connectivity interfaces with Quectel FC20 module.

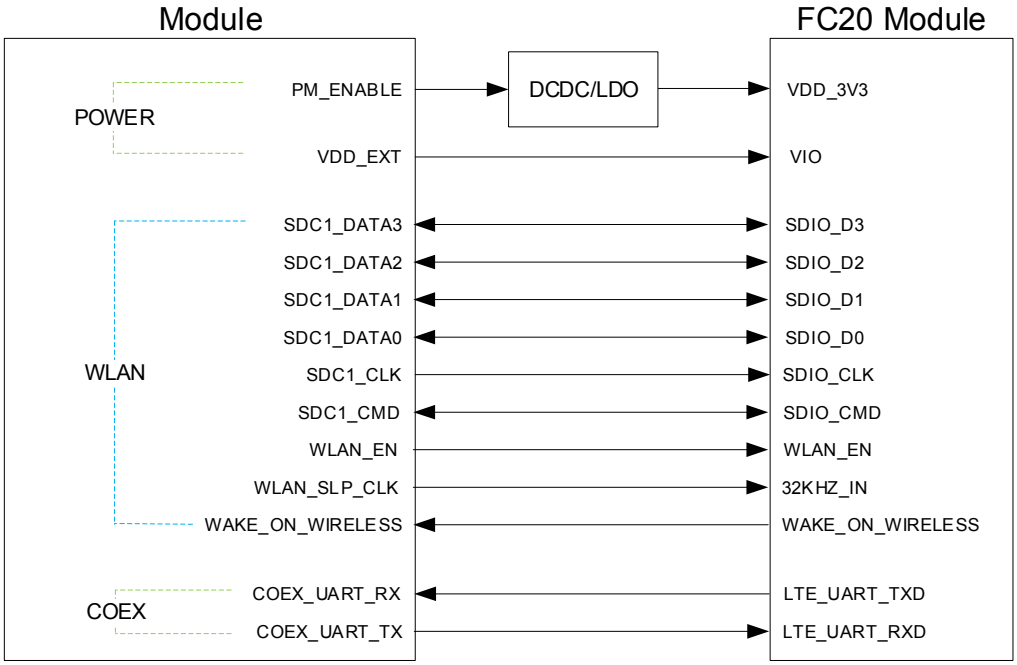

Figure 30: Reference Circuit of Wireless Connectivity Interfaces with FC20 Module

NOTES

1. FC20 module can only be used as a slave device.
2. When BT function is enabled on EC25 module, PCM_SYNC and PCM_CLK pins are only used to output signals.
3. For more information about wireless connectivity interfaces, please refer to ***document [5]***.

4. "*" means under development.
5. [1)] Pads 24~27 are multiplexing pins used for audio design on EC25 module and BT function on BT module.

3.19.1. WLAN Interface

EC25 provides a low power SDIO 3.0 interface and control interface for WLAN design.

SDIO interface supports the SDR mode (up to 50MHz).

As SDIO signals are very high-speed, in order to ensure the SDIO interface design corresponds with the SDIO 3.0 specification, please comply with the following principles:

- It is important to route the SDIO signal traces with total grounding. The impedance of SDIO signal trace is 50Ω±10%.
- Keep SDIO signals far away from other sensitive circuits/signals such as RF circuits, analog signals,
- etc., as well as noisy signals such as clock signals, DCDC signals, etc.
- It is recommended to keep matching length between CLK andDATA/CMD less than 1mm and total routing length less than 50mm.
- Keep termination resistors within 15Ω~24Ω on clock lines near the module and keep the route distance from the module clock pins to termination resistors less than 5mm.
- Make sure the adjacent trace spacing is 2 times of the trace width and bus capacitance is less than 15pF.

NOTE

WLAN is an optional function for EC25-AF which not included in current product.

3.19.2. BT Interface*

EC25 supports a dedicated UART interface and a PCM interface for BT application.

Further information about BT interface will be added in future version of this document.

NOTE

"*" means under development.
BT is an optional function for EC25-AF which not included in current product.

3.20. USB_BOOT Interface

EC25 provides a USB_BOOT pin. Developers can pull up USB_BOOT to VDD_EXT before powering on the module, thus the module will enter into emergency download mode when powered on. In this mode, the module supports firmware upgrade over USB interface.

Table 24: Pin Definition of USB_BOOT Interface

Pin Name	Pin No.	I/O	Description	Comment
USB_BOOT	115	DI	Force the module enter into emergency download mode	1.8V power domain. Active high. It is recommended to reserve test point.

The following figure shows a reference circuit of USB_BOOT interface.

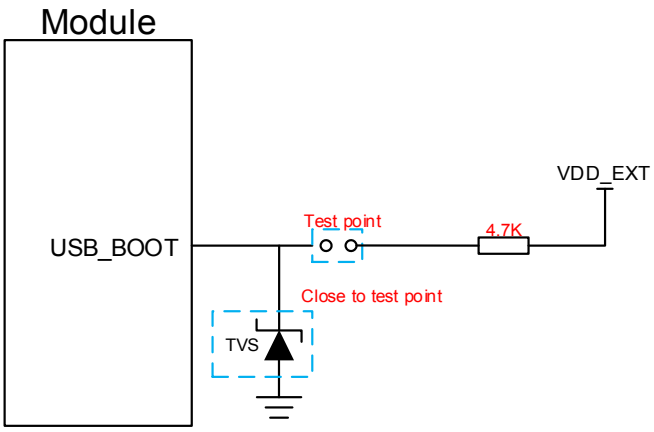

Figure 31: Reference Circuit of USB_BOOT Interface

4 GNSS Receiver

4.1. General Description

EC25 includes a fully integrated global navigation satellite system solution that supports Gen8C-Lite of Qualcomm (GPS, GLONASS, BeiDou, Galileo and QZSS).

EC25 supports standard NMEA-0183 protocol, and outputs NMEA sentences at 1Hz data update rate via USB interface by default.

By default, EC25 GNSS engine is switched off. It has to be switched on via AT command. For more details about GNSS engine technology and configurations, please refer to ***document [3]***.

4.2. GNSS Performance

The following table shows GNSS performance of EC25.

Table 25: GNSS Performance

Parameter	Description	Conditions	Typ.	Unit
Sensitivity (GNSS)	Cold start	Autonomous	-146	dBm
	Reacquisition	Autonomous	-157	dBm
	Tracking	Autonomous	-157	dBm
TTFF (GNSS)	Cold start @open sky	Autonomous	35	s
		XTRA enabled	18	s
	Warm start @open sky	Autonomous	26	s
		XTRA enabled	2.2	s

	Hot start @open sky	Autonomous	2.5	s
		XTRA enabled	1.8	s
Accuracy (GNSS)	CEP-50	Autonomous @open sky	<1.5	m

NOTES

1. Tracking sensitivity: the lowest GNSSsignal value at the antenna port on which the module can keep on positioning for 3 minutes.
2. Reacquisition sensitivity: the lowest GNSS signal value at the antenna port on which the module can fix position again within 3 minutes after loss of lock.
3. Cold start sensitivity: the lowest GNSS signal value at the antenna port on which the module fixes position within 3 minutes after executing cold start command.

4.3. Layout Guidelines

The following layout guidelines should be taken into account in customers' designs.

- Maximize the distance among GNSS antenna, main antenna and Rx-diversity antenna.
- Digital circuits such as (U)SIM card, USB interface, camera module and display connector should be kept away from the antennas.
- Use ground vias around the GNSS trace and sensitive analog signal traces to provide coplanar isolation and protection.
- Keep 50Ω characteristic impedance for the ANT_GNSS trace.

Please refer to ***Chapter 5*** for GNSS antenna reference design and antenna installation information.

5 Antenna Interfaces

EC25 antenna interfaces include a main antenna interface, an Rx-diversity antenna interface which is used to resist the fall of signals caused by high speed movement and multipath effect, and a GNSS antenna interface. The impedance of the antenna port is 50Ω.

5.1. Main/Rx-diversity Antenna Interfaces

5.1.1. Pin Definition

The pin definition of main antenna and Rx-diversityantenna interfaces is shown below.

Table 26: Pin Definition of RF Antenna

Pin Name	Pin No.	I/O	Description	Comment
ANT_MAIN	49	IO	Main antenna pad	50Ω impedance
ANT_DIV	35	AI	Receive diversity antenna pad	50Ω impedance If unused, keep it open.

5.1.2. Operating Frequency

Table 27: Module Operating Frequencies

3GPP Band	Transmit	Receive	Unit
GSM850	824~849	869~894	MHz
EGSM900	880~915	925~960	MHz
DCS1800	1710~1785	1805~1880	MHz
PCS1900	1850~1910	1930~1990	MHz
WCDMA B1	1920~1980	2110~2170	MHz

WCDMA B2	1850~1910	1930~1990	MHz
WCDMA B4	1710~1755	2110~2155	MHz
WCDMA B5	824~849	869~894	MHz
WCDMA B6	830~840	875~885	MHz
WCDMA B8	880~915	925~960	MHz
WCDMA B19	830~845	875~890	MHz
LTE FDD B1	1920~1980	2110~2170	MHz
LTE FDD B2	1850~1910	1930~1990	MHz
LTE FDD B3	1710~1785	1805~1880	MHz
LTE FDD B4	1710~1755	2110~2155	MHz
LTE FDD B5	824~849	869~894	MHz
LTE FDD B7	2500~2570	2620~2690	MHz
LTE FDD B8	880~915	925~960	MHz
LTE FDD B12	699~716	729~746	MHz
LTE FDD B13	777~787	746~756	MHZ
LTE FDD B14	788~798	758~768	MHZ
LTE FDD B18	815~830	860~875	MHz
LTE FDD B19	830~845	875~890	MHz
LTE FDD B20	832~862	791~821	MHz
LTE FDD B28	703~748	758~803	MHz
LTE TDD B38	2570~2620	2570~2620	MHz
LTE TDD B40	2300~2400	2300~2400	MHz
LTE TDD B41	2555~2655	2555~2655	MHz
LTE TDD B66	1710~1780	2100~2200	MHz
LTE TDD B71	663~698	617~652	MHz

5.1.3. Reference Design of RF Antenna Interface

Areference design of ANT_MAIN and ANT_DIV antenna pads is shown as below. A π-type matching circuit should be reserved for better RF performance. The capacitors are not mounted by default.

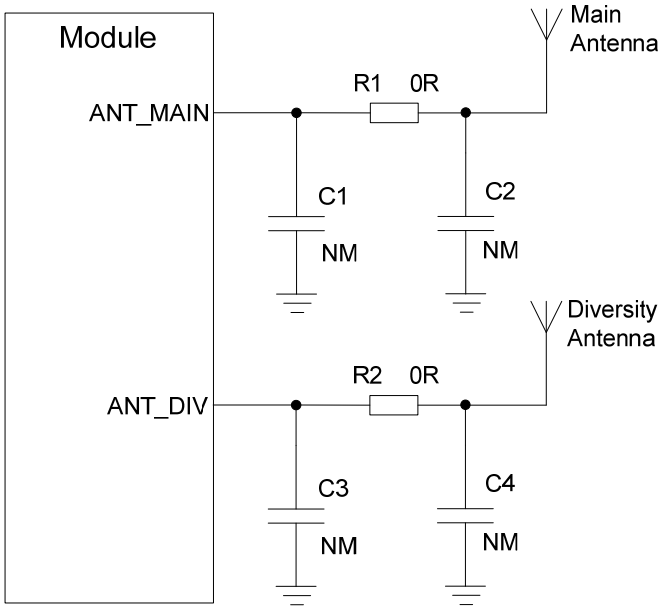

Figure 32: Reference Circuit of RF Antenna Interface

NOTES

1. Keep a proper distance between the main antenna and the Rx-diversity antenna to improve the receiving sensitivity.
2. ANT_DIV function is enabled by default.
3. Place the π-type matching components (R1&C1&C2, R2&C3&C4) as close to the antenna as possible.

5.1.4. Reference Design of RF Layout

For user's PCB, the characteristic impedance of all RF traces should be controlled as 50Ω. The impedance of the RF traces is usually determined by the trace width (W), the materials' dielectric constant, the distance between signal layer and reference ground (H), and the clearance between RF trace and ground (S). Microstrip line or coplanar waveguide line is typically used in RF layout for characteristic impedance control. The following are reference designs of microstrip line or coplanar waveguide line with different PCB structures

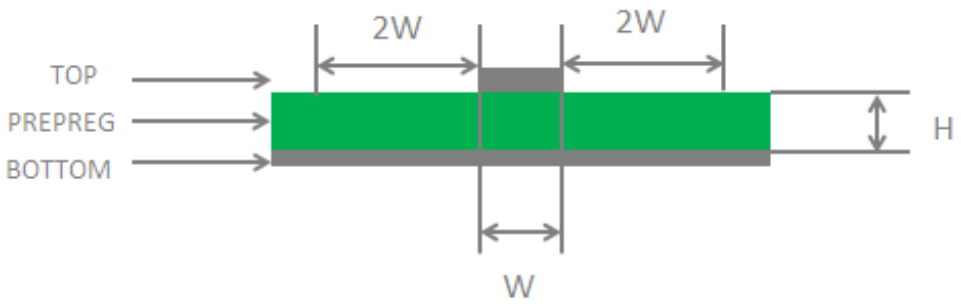

Figure 33: Microstrip Line Design on a 2-layer PCB

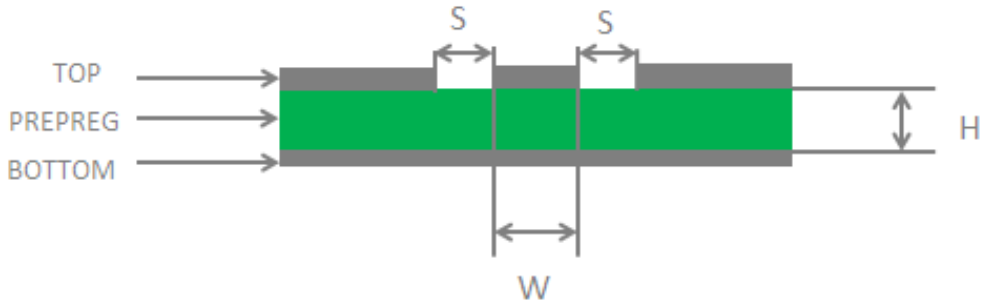

Figure 34: Coplanar Waveguide Line Design on a 2-layer PCB

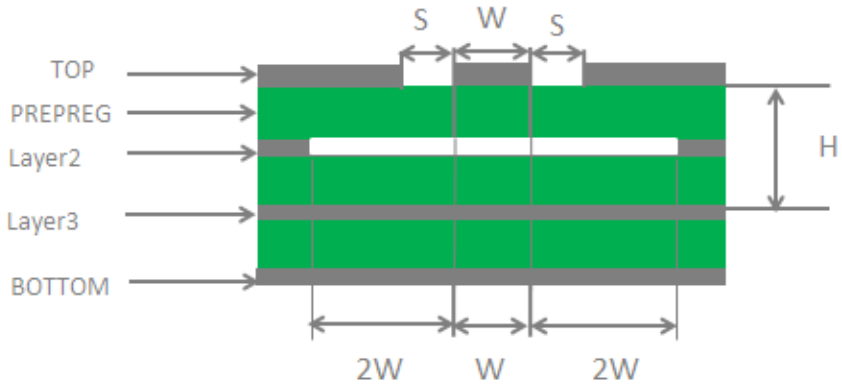

Figure 35: Coplanar Waveguide Line Design on a 4-layer PCB (Layer 3 as Reference Ground)

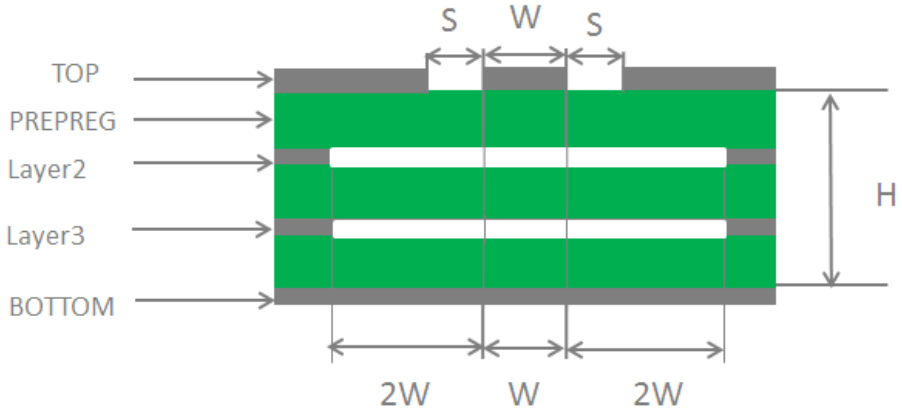

Figure 36: Coplanar Waveguide Line Design on a 4-layer PCB (Layer 4 as Reference Ground)

In order to ensure RF performance and reliability, the following principles should be complied with in RF layout design:

- Please use an impedance simulation tool to control the characteristic impedance of RF traces as 50Ω.
- The GND pins adjacent to RF pins should not be designed as thermal relief pads, and they should be fully connected to ground.
- The distance between the RF pins and the RF connector should be as short as possible, and all the right angle traces should be changed to curved ones.
- There should be clearance area under the signal pin of the antenna connector or solder joint.
- The reference ground of RF traces should be complete. Meanwhile, adding some ground vias around RF traces and the reference ground could help to improve RF performance. The distance between the ground vias and RF traces should be no less than two times the width of RF signal traces (2*W).

For more details about RF layout, please refer to ***document [6]***.

5.2. GNSS Antenna Interface

The following tables show pin definition and frequency specification of GNSS antenna interface.

Table 28: Pin Definition of GNSS Antenna Interface

Pin Name	Pin No.	I/O	Description	Comment
ANT_GNSS	47	AI	GNSS antenna	50Ω impedance If unused, keep it open.

Table 29: GNSS Frequency

Type	Frequency	Unit
GPS/Galileo/QZSS	1575.42±1.023	MHz
GLONASS	1597.5~1605.8	MHz
BeiDou	1561.098±2.046	MHz

A reference design of GNSS antenna is shown as below.

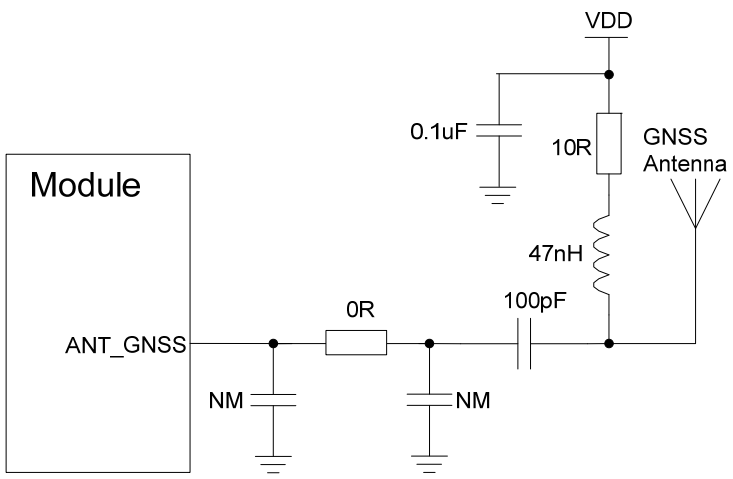

Figure 37: Reference Circuit of GNSS Antenna

NOTES

1. An external LDO can be selected to supply power according to the active antenna requirement.
2. If the module is designed with a passive antenna, then the VDD circuit is not needed.

5.3. Antenna Installation

5.3.1. Antenna Requirement

The following table shows the requirements on main antenna, Rx-diversity antenna and GNSS antenna.

Table 30: Antenna Requirements

Type	Requirements
GNSS[1)]	Frequency range: 1561MHz~1615MHz Polarization: RHCP or linear VSWR: < 2 (Typ.) Passive antenna gain: > 0dBi Active antenna noise figure: < 1.5dB Active antenna gain: > 0dBi Active antenna embedded LNA gain: < 17 dB
GSM/WCDMA/LTE	VSWR: ≤ 2 Efficiency: > 30% Max Input Power: 50W Input Impedance: 50Ω Cable Insertion Loss: < 1dB (GSM850, GSM 900, WCDMA B5/B6/B8/B19, LTE-FDD B5/B8/B12/B13/B14/B18/B19/B20/B26/B28/B71) Cable Insertion Loss: < 1.5dB (DCS1800, PCS1900, WCDMA B1/B2/B4, LTE-FDD B1/B2/B3/B4/B66) Cable Insertion loss: < 2dB (LTE-FDD B7, LTE-TDD B38/B40/B41)

NOTE

[1)] It is recommended to use a passive GNSS antenna when LTE B13 or B14 is supported, as the use of active antenna may generate harmonics which will affect the GNSS performance.

5.3.2. Recommended RF Connector for Antenna Installation

If RF connector is used for antenna connection, it is recommended to use U.FL-R-SMT connector provided by Hirose.

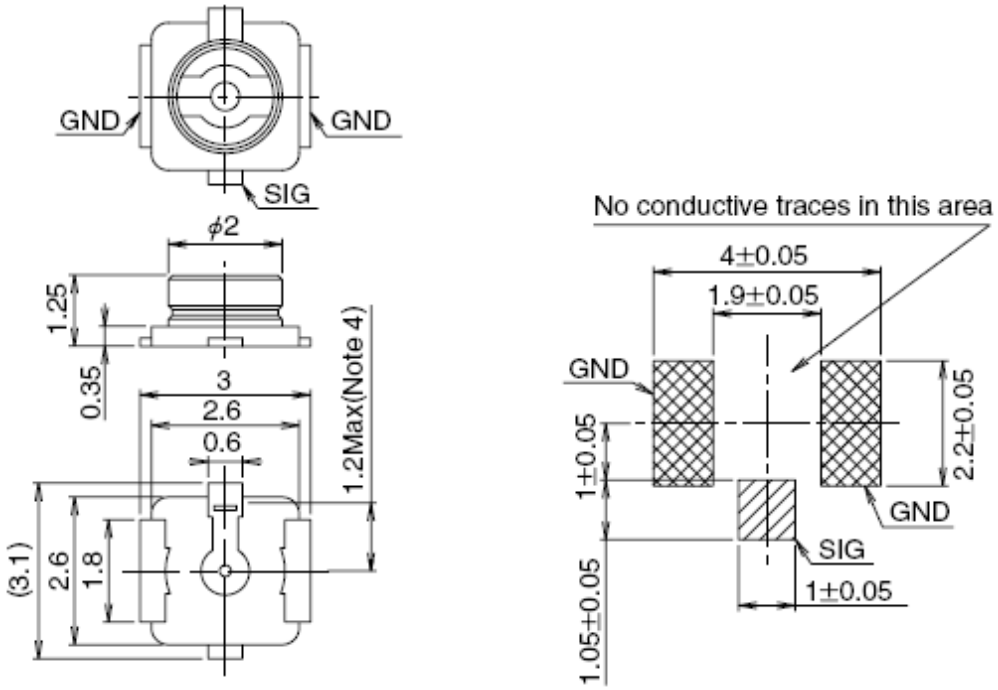

Figure 38: Dimensions of the U.FL-R-SMT Connector (Unit: mm)

U.FL-LP serial connectors listed in the following figure can be used to match the U.FL-R-SMT.

	U.FL-LP-040	U.FL-LP-066	U.FL-LP(V)-040	U.FL-LP-062	U.FL-LP-088
Part No.	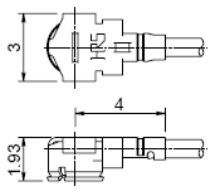	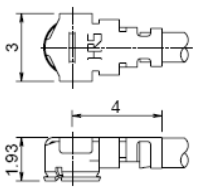	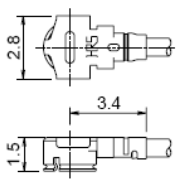	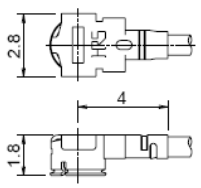	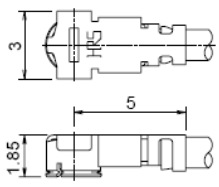
Mated Height	2.5mm Max. (2.4mm Nom.)	2.5mm Max. (2.4mm Nom.)	2.0mm Max. (1.9mm Nom.)	2.4mm Max. (2.3mm Nom.)	2.4mm Max. (2.3mm Nom.)
Applicable cable	Dia. 0.81mm Coaxial cable	Dia. 1.13mm and Dia. 1.32mm Coaxial cable	Dia. 0.81mm Coaxial cable	Dia. 1mm Coaxial cable	Dia. 1.37mm Coaxial cable
Weight (mg)	53.7	59.1	34.8	45.5	71.7
RoHS	YES				

Figure 39: Mechanicals of U.FL-LP Connectors

The following figure describes the space factor of mated connector.

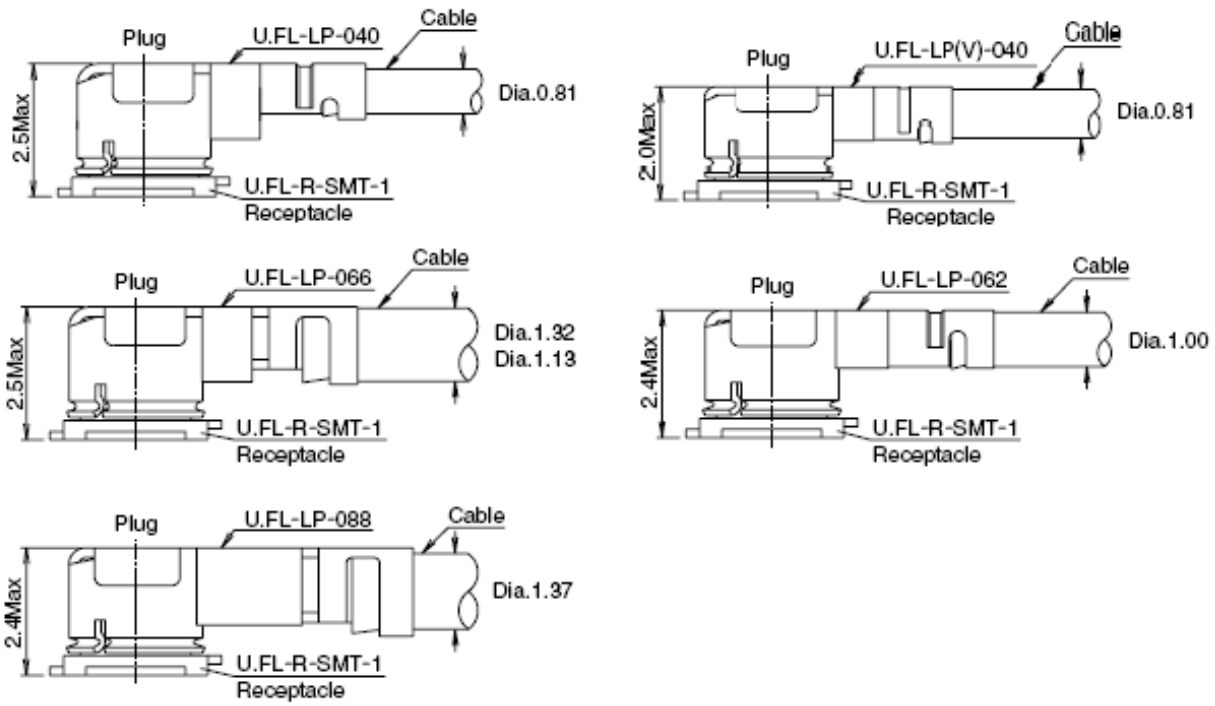

Figure 40: Space Factor of Mated Connector (Unit: mm)

For more details, please visit http://hirose.com.

6 Electrical, Reliability and Radio Characteristics

6.1. Absolute Maximum Ratings

Absolute maximum ratings for power supply and voltage on digital and analog pins of the module are listed in the following table.

Table 31: Absolute Maximum Ratings

Parameter	Min.	Max.	Unit
VBAT_RF/VBAT_BB	-0.3	4.7	V
USB_VBUS	-0.3	5.5	V
Peak Current of VBAT_BB	0	0.8	A
Peak Current of VBAT_RF	0	1.8	A
Voltage at Digital Pins	-0.3	2.3	V
Voltage at ADC0	0	VBAT_BB	V
Voltage at ADC1	0	VBAT_BB	V

6.2. Power Supply Ratings

Table 32: The Module Power Supply Ratings

Parameter	Description	Conditions	Min.	Typ.	Max.	Unit
VBAT	VBAT_BB and VBAT_RF	The actual input voltages must stay between the minimum and maximum values.	3.3	3.8	4.3	V
	Voltage drop during burst transmission	Maximum power control level on EGSM900.			400	mV
I_{VBAT}	Peak supply current (during transmission slot)	Maximum power control level on EGSM900.		1.8	2.0	A
USB_VBUS	USB detection		3.0	5.0	5.25	V

6.3. Operation and Storage Temperatures

The operation and storage temperatures are listed in the following table.

Table 33: Operation and Storage Temperatures

Parameter	Min.	Typ.	Max.	Unit
OperationTemperature Range[1)]	-35	+25	+75	ºC
Extended Operation Range[2)]	-40		+85	ºC
Storage Temperature Range	-40		+90	ºC

NOTES

1. [1)] Within operation temperature range, the module is 3GPP compliant.
2. [2)] Within extended temperature range, the module remains the ability to establish and maintain a voice, SMS, data transmission, emergency call, etc. There is no unrecoverable malfunction. There are also no effects on radio spectrum and no harm to radio network. Only one or more parameters like P_{out} might reduce in their value and exceed the specified tolerances. When the temperature

returns to the normal operating temperature levels, the module will meet 3GPP specifications again.

6.4. Current Consumption

The values of current consumption are shown below.

Table 34: EC25-E Current Consumption

Parameter	Description	Conditions	Typ.	Unit
I_{VBAT}	OFF state	Power down	11	uA
	Sleep state	**AT+CFUN=0** (USB disconnected)	1.16	mA
		GSM DRX=2 (USB disconnected)	2.74	mA
		GSM DRX=9 (USB disconnected)	2.0	mA
		WCDMA PF=64 (USB disconnected)	2.15	mA
		WCDMA PF=128 (USB disconnected)	1.67	mA
		LTE-FDD PF=64 (USB disconnected)	2.60	mA
		LTE-FDD PF=128 (USB disconnected)	1.90	mA
		LTE-TDD PF=64 (USB disconnected)	2.79	mA
		LTE-TDD PF=128 (USB disconnected)	2.00	mA
	Idle state	GSM DRX=5 (USB disconnected)	19.5	mA
		GSM DRX=5 (USB connected)	29.5	mA
		WCDMA PF=64 (USB disconnected)	21.0	mA
		WCDMA PF=64 (USB connected)	31.0	mA
		LTE-FDD PF=64 (USB disconnected)	20.7	mA
		LTE-FDD PF=64 (USB connected)	30.8	mA
		LTE-TDD PF=64 (USB disconnected)	20.8	mA

		LTE-TDD PF=64 (USB connected)	32.0	mA
	GPRS data transfer (GNSS OFF)	EGSM900 4DL/1UL @33.22dBm	271.0	mA
		EGSM900 3DL/2UL @33.0dBm	464.0	mA
		EGSM900 2DL/3UL @30.86dBm	524.0	mA
		EGSM900 1DL/4UL @29.58dBm	600	mA
		DCS1800 4DL/1UL @29.92dBm	192.0	mA
		DCS1800 3DL/2UL @29.84dBm	311.0	mA
		DCS1800 2DL/3UL @29.67dBm	424.0	mA
		DCS1800 1DL/4UL @29.48dBm	539.0	mA
	EDGE data transfer (GNSS OFF)	EGSM900 4DL/1UL PCL=8 @27.40dBm	174.0	mA
		EGSM900 3DL/2UL PCL=8 @27.24dBm	281.0	mA
		EGSM900 2DL/3UL PCL=8 @27.11dBm	379.0	mA
		EGSM900 1DL/4UL PCL=8 @26.99dBm	480.0	mA
		DCS1800 4DL/1UL PCL=2 @25.82dBm	159.0	mA
		DCS1800 3DL/2UL PCL=2 @25.85dBm	251.0	mA
		DCS1800 2DL/3UL PCL=2 @25.68dBm	340.0	mA
		DCS1800 1DL/4UL PCL=2 @25.57dBm	433.0	mA
	WCDMA datatransfer (GNSS OFF)	WCDMA B1 HSDPA @22.47dBm	613.0	mA
		WCDMA B1 HSUPA @22.44dBm	609.0	mA
		WCDMA B5 HSDPA @23.07dBm	671.0	mA
		WCDMA B5 HSUPA @23.07dBm	669.0	mA
		WCDMA B8 HSDPA @22.67dBm	561.0	mA
		WCDMA B8 HSUPA @22.39dBm	557.0	mA
	LTE datatransfer (GNSS OFF)	LTE-FDD B1 @23.27dBm	754.0	mA
		LTE-FDD B3 @23.54dBm	774.0	mA

	LTE datatransfer (GNSS OFF)	LTE-FDD B5 @22.83dBm	762.0	mA
		LTE-FDD B7 @23.37dBm	842.0	mA
		LTE-FDD B8 @23.48dBm	720.0	mA
		LTE-FDD B20 @22.75dBm	714.0	mA
		LTE-TDD B38 @23.05dBm	481.0	mA
		LTE-TDD B40 @23.17dBm	431.8	mA
		LTE-TDD B41 @23.02dBm	480.0	mA
	GSM voice call	EGSM900 PCL=5 @33.08dBm	264.0	mA
		DCS1800 PCL=0 @29.75dBm	190.0	mA
	WCDMA voice call	WCDMA B1 @23.22dBm	680.0	mA
		WCDMA B5 @23.18dBm	677.0	mA
		WCDMA B8 @23.54dBm	618.0	mA

Table 35: EC25-A Current Consumption

Parameter	Description	Conditions	Typ.	Unit
I_{VBAT}	OFF state	Power down	10	uA
	Sleep state	**AT+CFUN=0** (USB disconnected)	1.1	mA
		WCDMA PF=64 (USB disconnected)	1.8	mA
		WCDMA PF=128 (USB disconnected)	1.5	mA
		LTE-FDD PF=64 (USB disconnected)	2.2	mA
		LTE-FDD PF=128 (USB disconnected)	1.6	mA
	Idle state	WCDMA PF=64 (USB disconnected)	21.0	mA
		WCDMA PF=64 (USB connected)	31.0	mA
		LTE-FDD PF=64 (USB disconnected)	21.0	mA
		LTE-FDD PF=64 (USB connected)	31.0	mA

	WCDMA datatransfer (GNSS OFF)	WCDMA B2 HSDPA @21.9dBm	591.0	mA
		WCDMA B2 HSUPA @21.62dBm	606.0	mA
		WCDMA B4 HSDPA @22.02dBm	524.0	mA
		WCDMA B4 HSUPA @21.67dBm	540.0	mA
		WCDMA B5 HSDPA @22.71dBm	490.0	mA
		WCDMA B5 HSUPA @22.58dBm	520.0	mA
	LTE datatransfer (GNSS OFF)	LTE-FDD B2 @22.93dBm	715.0	mA
		LTE-FDD B4 @22.96dBm	738.0	mA
		LTE-FDD B12 @23.35dBm	663.0	mA
	WCDMA voice call	WCDMA B2 @22.93dBm	646.0	mA
		WCDMA B4 @23dBm	572.0	mA
		WCDMA B5 @23.78dBm	549.0	mA

Table 36: EC25-V Current Consumption

Parameter	Description	Conditions	Typ.	Unit
I_{VBAT}	OFF state	Power down	10	uA
	Sleep state	**AT+CFUN=0** (USB disconnected)	0.85	mA
		LTE-FDD PF=64 (USB disconnected)	2.0	mA
		LTE-FDD PF=128 (USB disconnected)	1.5	mA
	Idle state	LTE-FDD PF=64 (USB disconnected)	20.0	mA
		LTE-FDD PF=64 (USB connected)	31.0	mA
		WCDMA B2 HSUPA @21.62dBm	606.0	mA
		WCDMA B4 HSDPA @22.02dBm	524.0	mA
		WCDMA B4 HSUPA @21.67dBm	540.0	mA
		WCDMA B5 HSDPA @22.71dBm	490.0	mA

		WCDMA B5 HSUPA @22.58dBm	520.0	mA
	LTE datatransfer (GNSS OFF)	LTE-FDD B4 @23.14dBm	770.0	mA
		LTE-FDD B13 @23.48dBm	531.0	mA

Table 37: EC25-J Current Consumption

Parameter	Description	Conditions	Typ.	Unit
I_{VBAT}	OFF state	Power down	10	uA
	Sleep state	**AT+CFUN=0** (USB disconnected)	1.1	mA
		WCDMA PF=64 (USB disconnected)	1.9	mA
		WCDMA PF=128 (USB disconnected)	1.5	mA
		LTE-FDD PF=64 (USB disconnected)	2.5	mA
		LTE-FDD PF=128 (USB disconnected)	1.8	mA
		LTE-TDD PF=64 (USB disconnected)	2.6	mA
		LTE-TDD PF=128 (USB disconnected)	1.9	mA
	Idle state	WCDMA PF=64 (USB disconnected)	21.0	mA
		WCDMA PF=64 (USB connected)	31.0	mA
		LTE-FDD PF=64 (USB disconnected)	21.0	mA
		LTE-FDD PF=64 (USB connected)	32.0	mA
		LTE-TDD PF=64 (USB disconnected)	21.0	mA
		LTE-TDD PF=64 (USB connected)	32.0	mA
	WCDMA datatransfer (GNSS OFF)	WCDMA B1 HSDPA @22.32dBm	550.0	mA
		WCDMA B1 HSUPA @22.64dBm	516.0	mA
		WCDMA B6 HSDPA @22.02dBm	524.0	mA
		WCDMA B6 HSUPA @22.33dBm	521.0	mA
		WCDMA B19 HSDPA @22.67dBm	517.0	mA

		WCDMA B19 HSUPA @22.33dBm	522.0	mA
	LTE datatransfer (GNSS OFF)	LTE-FDD B1 @23.16dBm	685.0	mA
		LTE-FDD B3 @23.22dBm	766.0	mA
		LTE-FDD B8 @23.22dBm	641.0	mA
		LTE-FDD B18 @23.35dBm	661.0	mA
		LTE-FDD B19 @23.16dBm	677.0	mA
		LTE-FDD B26 @22.87dBm	690.0	mA
		LTE-TDD B41 @22.42dBm	439.0	mA
	WCDMA voice call	WCDMA B1 @22.33dBm	605.0	mA
		WCDMA B6 @23.28dBm	549.0	mA
		WCDMA B19 @23.28dBm	549.0	mA

Table 38: EC25-AU Current Consumption

Parameter	Description	Conditions	Typ.	Unit
I_{VBAT}	OFF state	Power down	11	uA
	Sleep state	**AT+CFUN=0**	1.3	mA
		AT+CFUN=0 (USB disconnected)	1.46	mA
		GSM850 DRX=5 (USB disconnected)	1.8	mA
		EGSM900 DRX=5 (USB disconnected)	2.0	mA
		DCS1800 DRX=5 (USB disconnected)	1.9	mA
		PCS1900 DRX=5 (USB disconnected)	1.9	mA
		WCDMA PF=64 (USB disconnected)	2.0	mA
		WCDMA PF=128 (USB disconnected)	1.6	mA
		LTE-FDD PF=64 (USB disconnected)	2.2	mA
		LTE-FDD PF=128 (USB disconnected)	1.6	mA

		LTE-TDD PF=64 (USB disconnected)	2.3	mA
		LTE-TDD PF=128 (USB disconnected)	1.6	mA
	Idle state	EGSM900 DRX=5 (USB disconnected)	22.0	mA
		EGSM900 DRX=5 (USB connected)	34.0	mA
		WCDMA PF=64 (USB disconnected)	22.0	mA
		WCDMA PF=64 (USB connected)	33.0	mA
		LTE-FDD PF=64 (USB disconnected)	24.0	mA
		LTE-FDD PF=64 (USB connected)	35.0	mA
		LTE-TDD PF=64 (USB disconnected)	24.0	Ma
		LTE-TDD PF=64 (USB connected)	35.0	mA
	GPRS data transfer (GNSS OFF)	GSM850 1UL/4DL @32.53dBm	232.0	mA
		GSM850 2UL/3DL @32.34dBm	384.0	mA
		GSM850 3UL/2DL @30.28dBm	441.0	mA
		GSM850 4UL/1DL @29.09dBm	511.0	mA
		EGSM900 1UL/4DL @32.34dBm	241.0	mA
		EGSM900 2UL/3DL @32.19dBm	397.0	mA
		EGSM900 3UL/2DL @30.17dBm	459.0	mA
		EGSM900 4UL/1DL @28.96dBm	533.0	mA
		DCS1800 1UL/4DL @29.71dBm	183.0	mA
		DCS1800 2UL/3DL @29.62dBm	289.0	mA
		DCS1800 3UL/2DL @29.49dBm	392.0	mA
		DCS1800 4UL/1DL @29.32dBm	495.0	mA
		PCS1900 1UL/4DL @29.61dBm	174.0	mA
		PCS1900 1UL/4DL @29.48dBm	273.0	mA
		PCS1900 1UL/4DL @29.32dBm	367.0	mA

		PCS1900 1UL/4DL @29.19dBm	465.0	mA
	EDGE data transfer (GNSS OFF)	GSM850 1UL/4DL @27.09dBm	154.0	mA
		GSM850 2UL/3DL @26.94dBm	245.0	mA
		GSM850 3UL/2DL @26.64dBm	328.0	mA
		GSM850 4UL/1DL @26.53dBm	416.0	mA
		EGSM900 1UL/4DL @26.64dBm	157.0	mA
		EGSM900 2UL/3DL @26.95dBm	251.0	mA
		EGSM900 3UL/2DL @26.57dBm	340.0	mA
		EGSM900 4UL/1DL @26.39dBm	431.0	mA
		DCS18001 UL/4DL @26.03dBm	152.0	mA
		DCS1800 2UL/3DL @25.62dBm	240.0	mA
		DCS1800 3UL/2DL @25.42dBm	325.0	mA
		DCS1800 4UL/1DL @25.21dBm	415.0	mA
		PCS1900 1UL/4DL @25.65dBm	148.0	mA
		PCS1900 1UL/4DL @25.63dBm	232.0	mA
		PCS1900 1UL/4DL @25.54dBm	313.0	mA
		PCS1900 1UL/4DL @25.26dBm	401.0	mA
	WCDMA data (GNSS OFF)	WCDMA B1 HSDPA @22.34dBm	625.0	mA
		WCDMA B1 HSUPA @21.75dBm	617.0	mA
		WCDMA B2 HSDPA @22.51dBm	610.0	mA
		WCDMA B2 HSUPA @22. 14dBm	594.0	mA
		WCDMA B5 HSDPA @22.98dBm	576.0	mA
		WCDMA B5 HSUPA @22.89dBm	589.0	mA
		WCDMA B8 HSDPA @22.31dBm	556.0	mA
		WCDMA B8 HSUPA @22.11dBm	572.0	mA

	LTE datatransfer (GNSS OFF)	LTE-FDD B1 @23.28dBm	817.0	mA
		LTE-FDD B2 @23.34dBm	803.0	mA
		LTE-FDD B3 @23.2dBm	785.0	mA
		LTE-FDD B4 @22.9dBm	774.0	mA
		LTE-FDD B5 @23.45dBm	687.0	mA
		LTE-FDD B7 @22.84dBm	843.0	mA
		LTE-FDD B8 @22.92dBm	689.0	mA
		LTE-FDD B28 @23.23dBm	804.0	mA
		LTE-TDD B40 @23.3dBm	429.0	mA
	GSM voice call	GSM850 PCL5 @32.66dBm	228.0	mA
		EGSM900 PCL5 @32.59dBm	235.0	mA
		DCS1800 PCL0 @29.72dBm	178.0	mA
		PCS1900 PCL0 @29.82dBm	170.0	mA
	WCDMA voice call	WCDMA B1 @23.27dBm	687.0	mA
		WCDMA B2 @23.38dBm	668.0	mA
		WCDMA B5 @23.38dBm	592.0	mA
		WCDMA B8 @23.32dBm	595.0	mA

Table 39: EC25-AUT Current Consumption

Parameter	Description	Conditions	Typ.	Unit
I_{VBAT}	OFF state	Power down	10	uA
	Sleep state	**AT+CFUN=0** (USB disconnected)	1.0	mA
		WCDMA PF=64 (USB disconnected)	1.9	mA
		WCDMA PF=128 (USB disconnected)	1.5	mA
		LTE-FDD PF=64 (USB disconnected)	2.3	mA
		LTE-FDD PF=128 (USB disconnected)	1.9	mA

I_{VBAT}	Idle state	WCDMA PF=64 (USB disconnected)	23.0	mA
		WCDMA PF=64 (USB connected)	33.0	mA
		LTE-FDD PF=64 (USB disconnected)	17.0	mA
		LTE-FDD PF=64 (USB connected)	29.0	mA
		LTE-TDD PF=64 (USB disconnected)	21.0	mA
		LTE-TDD PF=64 (USB connected)	32.0	mA
	WCDMA datatransfer (GNSS OFF)	WCDMA B1 HSDPA @22.24dBm	500.0	mA
		WCDMA B1 HSUPA @22.05dBm	499.0	mA
		WCDMA B5 HSDPA @22.39dBm	418.0	mA
		WCDMA B5 HSUPA @22dBm	486.0	mA
	LTE datatransfer (GNSS OFF)	LTE-FDD B1 @23.28dBm	707.0	mA
		LTE-FDD B3 @23.36dBm	782.0	mA
		LTE-FDD B5 @23.32dBm	588.0	mA
		LTE-FDD B7 @23.08dBm	692.0	mA
		LTE-FDD B28-A @23.37dBm	752.0	mA
		LTE-FDD B28-B @23.48dBm	770.0	mA
	WCDMA voice call	WCDMA B1 @23.22dBm	546.0	mA
		WCDMA B5 @23.01dBm	511.0	mA

Table 40: EC25-AF Current Consumption

Parameter	Description	Conditions	Typ.	Unit
I_{VBAT}	OFF state	Power down	10	uA
	Sleep state	**AT+CFUN=0** (USB disconnected)	1.0	mA
		WCDMA PF=64 (USB disconnected)	1.8	mA
		WCDMA PF=128 (USB disconnected)	1.4	mA

		LTE-FDD PF=64 (USB disconnected)	2.2	mA
		LTE-FDD PF=128 (USB disconnected)	1.8	mA
	Idle state	WCDMA PF=64 (USB disconnected)	23.3	mA
		WCDMA PF=64 (USB connected)	33.4	mA
		LTE-FDD PF=64 (USB disconnected)	17.6	mA
		LTE-FDD PF=64 (USB connected)	29.4	mA
I_{VBAT}	WCDMA datatransfer (GNSS OFF)	WCDMA B2 HSDPA @22.36dBm	509.0	mA
		WCDMA B2 HSUPA @22.27dBm	511.0	mA
		WCDMA B4 HSDPA @22.22dBm	521.0	mA
		WCDMA B4 HSUPA @22.31dBm	518.0	mA
		WCDMA B5 HSDPA @22.39dBm	496.0	mA
		WCDMA B5 HSUPA @22dBm	502.0	mA
	LTE datatransfer (GNSS OFF)	LTE-FDD B2 @23.2dBm	600.0	mA
		LTE-FDD B4 @23.85dBm	634.0	mA
		LTE-FDD B5 @23.0dBm	600.0	mA
		LTE-FDD B12 @23.08dBm	692.0	mA
		LTE-FDD B13 @23.1dBm	660.0	mA
		LTE-FDD B14 @23.5dBm	676.0	mA
		LTE-FDD B66 @22.9dBm	662.0	mA
		LTE-FDD B71 @22.88dBm	600.0	mA
	WCDMA voice call	WCDMA B2 @23.24dBm	570.0	mA
		WCDMA B4 @23.2dBm	581.0	mA
		WCDMA B5 @23.4dBm	500.0	mA

Table 41: GNSS Current Consumption of EC25 Series Module

Parameter	Description	Conditions	Typ.	Unit
I_{VBAT} (GNSS)	Searching (**AT+CFUN=0**)	Cold start @Passive Antenna	54.0	mA
		Lost state @Passive Antenna	53.9	mA
	Tracking (**AT+CFUN=0**)	Instrument Environment	30.5	mA
		Open Sky @Passive Antenna	33.2	mA
		Open Sky @Active Antenna	40.8	mA

6.5. RF Output Power

The following table shows the RF output power of EC25 module.

Table 42: RF Output Power

Frequency	Max.	Min.
GSM850/EGSM900	33dBm±2dB	5dBm±5dB
DCS1800/PCS1900	30dBm±2dB	0dBm±5dB
GSM850/EGSM900 (8-PSK)	27dBm±3dB	5dBm±5dB
DCS1800/PCS1900 (8-PSK)	26dBm±3dB	0dBm±5dB
WCDMA bands	24dBm+1/-3dB	<-49dBm
LTE-FDD bands	23dBm±2dB	<-39dBm
LTE-TDD bands	23dBm±2dB	<-39dBm

NOTE

In GPRS 4 slots TX mode, the maximum output power is reduced by 3dB. The design conforms to the GSM specification as described in ***Chapter 13.16*** of *3GPP TS 51.010-1*.

6.6. RF Receiving Sensitivity

The following tables show conducted RF receiving sensitivity of EC25 series module.

Table 43: EC25-E Conducted RF Receiving Sensitivity

Frequency	Primary	Diversity	SIMO[1)]	3GPP (SIMO)
EGSM900	-109.0dBm	/	/	-102.0dBm
DCS1800	-109.0dBm	/	/	-102.0dbm
WCDMA B1	-110.5dBm	/	/	-106.7dBm
WCDMA B5	-110.5dBm	/	/	-104.7dBm
WCDMA B8	-110.5dBm	/	/	-103.7dBm
LTE-FDD B1 (10M)	-98.0dBm	-98.0dBm	-101.5dBm	-96.3dBm
LTE-FDD B3 (10M)	-96.5dBm	-98.5dBm	-101.5dBm	-93.3dBm
LTE-FDD B5 (10M)	-98.0dBm	-98.5dBm	-101.0dBm	-94.3dBm
LTE-FDD B7 (10M)	-97.0dBm	-94.5dBm	-99.5dBm	-94.3dBm
LTE-FDD B8 (10M)	-97.0dBm	-97.0dBm	-101.0dBm	-93.3dBm
LTE-FDD B20 (10M)	-97.5dBm	-99.0dBm	-102.5dBm	-93.3dBm
LTE-TDD B38 (10M)	-96.7dBm	-97.0dBm	-100.0dBm	-96.3dBm
LTE-TDD B40 (10M)	-96.3dBm	-98.0dBm	-101.0dBm	-96.3dBm
LTE-TDD B41 (10M)	-95.2dBm	-95.7dBm	-99.0dBm	-94.3dBm

Table 44: EC25-A Conducted RF Receiving Sensitivity

Frequency	Primary	Diversity	SIMO[1)]	3GPP (SIMO)
WCDMA B2	-110.0dBm	/	/	-104.7dBm
WCDMA B4	-110.0dBm	/	/	-106.7dBm
WCDMA B5	-110.5dBm	/	/	-104.7dBm

LTE-FDD B2 (10M)	-98.0dBm	-98.0dBm	-101.0dBm	-94.3dBm
LTE-FDD B4 (10M)	-97.5dBm	-99.0dBm	-101.0dBm	-96.3dBm
LTE-FDD B12 (10M)	-96.5dBm	-98.0dBm	-101.0dBm	-93.3dBm

Table 45: EC25-V Conducted RF Receiving Sensitivity

Frequency	Primary	Diversity	SIMO[1)]	3GPP (SIMO)
LTE-FDD B4 (10M)	-97.5dBm	-99.0dBm	-101.0dBm	-96.3dBm
LTE-FDD B13 (10M)	-95.0dBm	-97.0dBm	-100.0dBm	-93.3dBm

Table 46: EC25-J Conducted RF Receiving Sensitivity

Frequency	Primary	Diversity	SIMO[1)]	3GPP (SIMO)
WCDMA B1	-110.0dBm	/	/	-106.7dBm
WCDMA B6	-110.5dBm	/	/	-106.7dBm
WCDMA B8	-110.5dBm	/	/	-103.7dBm
WCDMA B19	-110.5dBm	/	/	-106.7dBm
LTE-FDD B1 (10M)	-97.5dBm	-98.7dBm	-100.2dBm	-96.3dBm
LTE-FDD B3 (10M)	-96.5dBm	-97.1dBm	-100.5dBm	-93.3dBm
LTE-FDD B8 (10M)	-98.4dBm	-99.0dBm	-101.2dBm	-93.3dBm
LTE-FDD B18 (10M)	-99.5dBm	-99.0dBm	-101.7dBm	-96.3dBm
LTE-FDD B19 (10M)	-99.2dBm	-99.0dBm	-101.4dBm	-96.3dBm
LTE-FDD B26 (10M)	-99.5dBm	-99.0dBm	-101.5dBm	-93.8dBm
LTE-TDD B41 (10M)	-95.0dBm	-95.7dBm	-99.0dBm	-94.3dBm

Table 47: EC25-AU Conducted RF Receiving Sensitivity

Frequency	Primary	Diversity	SIMO[1)]	3GPP (SIMO)
GSM850	-109.0dBm	/	/	-102.0dBm
EGSM900	-109.0dBm	/	/	-102.0dBm
DCS1800	-109.0dBm	/	/	-102.0dBm
PCS1900	-109.0dBm	/	/	-102.0dBm
WCDMA B1	-110.0dBm	/	/	-106.7dBm
WCDMA B2	-110.0dBm	/	/	-104.7dBm
WCDMA B5	-111.0dBm	/	/	-104.7dBm
WCDMA B8	-111.0dBm	/	/	-103.7dBm
LTE-FDD B1 (10M)	-97.2dBm	-97.5dBm	-100.2dBm	-96.3dBm
LTE-FDD B2 (10M)	-98.2dBm	/	/	-94.3dBm
LTE-FDD B3 (10M)	-98.7dBm	-98.6dBm	-102.2dBm	-93.3dBm
LTE-FDD B4 (10M)	-97.7dBm	-97.4dBm	-100.2dBm	-96.3dBm
LTE-FDD B5 (10M)	-98.0dBm	-98.2dBm	-101.0dBm	-94.3dBm
LTE-FDD B7 (10M)	-97.7dBm	-97.7dBm	-101.2dBm	-94.3dBm
LTE-FDD B8 (10M)	-99.2dBm	-98.2dBm	-102.2dBm	-93.3dBm
LTE-FDD B28 (10M)	-98.6dBm	-98.7dBm	-102.0dBm	-94.8dBm
LTE-TDD B40 (10M)	-97.2dBm	-98.4dBm	-101.2dBm	-96.3dBm

Table 48: EC25-AUT Conducted RF Receiving Sensitivity

Frequency	Primary	Diversity	SIMO[1)]	3GPP (SIMO)
WCDMA B1	-110.0dBm	/	/	-106.7dBm
WCDMA B5	-110.5dBm	/	/	-104.7dBm
LTE-FDD B1 (10M)	-98.5dBm	-98.0dBm	-101.0dBm	-96.3dBm

LTE-FDD B3 (10M)	-98.0dBm	-96.0dBm	-100.0dBm	-93.3dBm
LTE-FDD B5 (10M)	-98.0dBm	-99.0dBm	-102.5dBm	-94.3dBm
LTE-FDD B7 (10M)	-97.0dBm	-95.0dBm	-98.5dBm	-94.3dBm
LTE-FDD B28 (10M)	-97.0dBm	-99.0dBm	-102.0dBm	-94.8dBm

Table 49: EC25-AUTL Conducted RF Receiving Sensitivity

Frequency	Primary	Diversity	SIMO[1)]	3GPP (SIMO)
LTE-FDD B3 (10M)	-98.0dBm	-96.0dBm	-100.0dBm	-93.3dBm
LTE-FDD B7 (10M)	-97.0dBm	-95.0dBm	-98.5dBm	-94.3dBm
LTE-FDD B28 (10M)	-97.0dBm	-99.0dBm	-102.0dBm	-94.8dBm

Table 50: EC25-AF Conducted RF Receiving Sensitivity

Frequency	Primary	Diversity	SIMO[1)]	3GPP (SIMO)
WCDMA B2	-109.5dBm	-111dbm	-113dbm	-104.7dBm
WCDMA B4	-108dBm	-111dbm	-111.5dbm	-106.7dBm
WCDMA B5	-110.5dBm	-111.5dbm	-114dbm	-104.7dBm
LTE-FDD B2 (10M)	-98.2dBm	-99.1dBm	-101.7dBm	-94.3dBm
LTE-FDD B4 (10M)	-97.3dBm	-98.6dBm	-101.1dBm	-96.3dBm
LTE-FDD B5 (10M)	-99dBm	-100.3dBm	-101.3dBm	-94.3Bm
LTE-FDD B12 (10M)	-99dBm	-99.2dBm	-102.1dBm	-93.3dBm
LTE-FDD B13 (10M)	-98.1dBm	-98.4dBm	-100.2dBm	-93.3dBm
LTE-FDD B14 (10M)	-97.9dBm	-98.6dBm	-99.5dBm	-93.3dBm
LTE-FDD B66 (10M)	-96.7dBm	-98.1dBm	-99.4dBm	-96.5dBm
LTE-FDD B71 (10M)	-99.2dBm	-99.4dBm	-101.5dBm	-94.2dBm

NOTE

[1] SIMO is a smart antenna technology that uses a single antenna at the transmitter side and two antennas at the receiver side, which can improve RX performance.

6.7. Electrostatic Discharge

The module is not protected against electrostatics discharge (ESD) in general. Consequently, it is subject to ESD handling precautions that typically apply to ESD sensitive components. Proper ESD handling and packaging procedures must be applied throughout the processing, handling and operation of any application that incorporates the module.

The following table shows the module electrostatics discharge characteristics.

Table 51: Electrostatics Discharge Characteristics

Tested Points	Contact Discharge	Air Discharge	Unit
VBAT, GND	±5	±10	kV
All Antenna Interfaces	±4	±8	kV
Other Interfaces	±0.5	±1	kV

6.8. Thermal Consideration

In order to achieve better performance of the module, it is recommended to comply with the following principles for thermal consideration:

- On customers' PCB design, please keep placement of the module away from heating sources, especially high power components such as ARM processor, audio power amplifier, power supply, etc.
- Do not place components on the opposite side of the PCB area where the module is mounted, in order to facilitate adding of heatsink when necessary.
- Do not apply solder mask on the opposite side of the PCB area where the module is mounted, so as to ensure better heat dissipation performance.
- The reference ground of the area where the module is mounted should be complete, and add ground vias as many as possible for better heat dissipation.
- Make sure the ground pads of the module and PCB are fully connected.

- According to customers' application demands, the heatsink can be mounted on the top of the module, or the opposite side of the PCB area where the module is mounted, or both of them.
- The heatsink should be designed with as many fins as possible to increase heat dissipation area. Meanwhile, a thermal pad with high thermal conductivity should be used between the heatsink and module/PCB.

The following shows two kinds of heatsink designs for reference and customers can choose one or both of them according to their application structure.

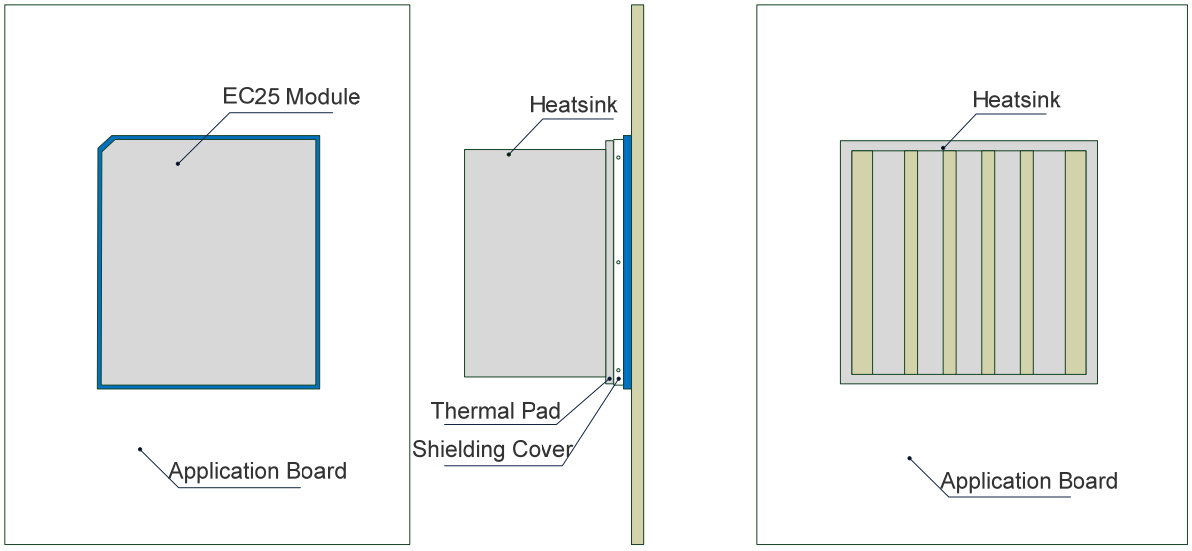

Figure 41: Referenced Heatsink Design (Heatsink at the Top of the Module)

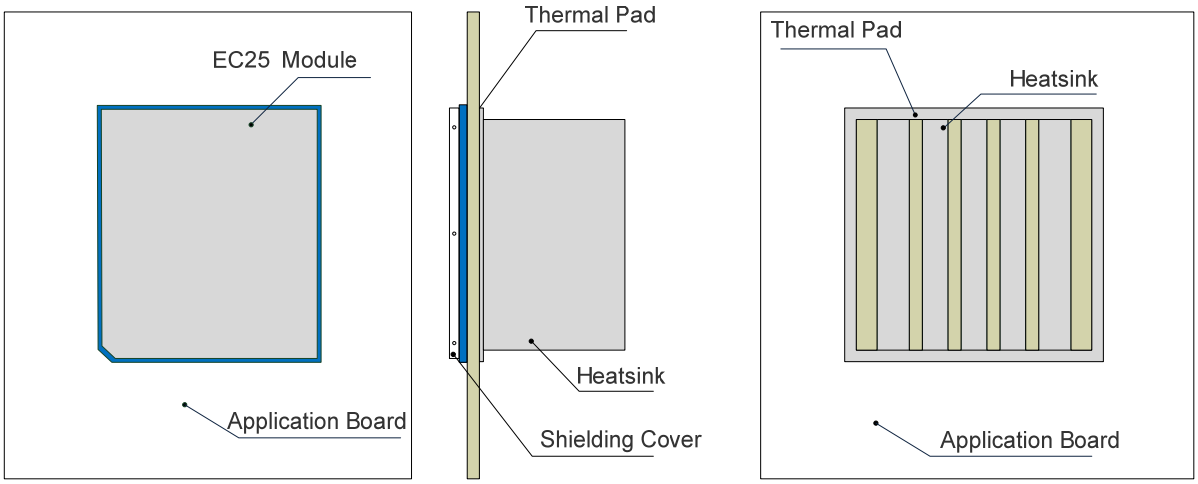

Figure 42: Referenced Heatsink Design (Heatsink at the Backside of Customers' PCB)

NOTE

The module offers the best performance when the internal BB chip stays below 105°C. When the maximum temperature of the BB chip reaches or exceeds 105°C, the module works normal but provides reduced performance (such as RF output power, data rate, etc.). When the maximum BB chip temperature reaches or exceeds 115°C, the module will disconnect from the network, and it will recover to network connected state after the maximum temperature falls below 115°C. Therefore, the thermal design should be maximally optimized to make sure the maximum BB chip temperature always maintains below 105°C. Customers can execute **AT+QTEMP** command and get the maximum BB chip temperature from the first returned value.

7 Mechanical Dimensions

This chapter describes the mechanical dimensions of the module. All dimensions are measured in mm. The tolerances for dimensions without tolerance values are ±0.05mm.

7.1. Mechanical Dimensions of the the Module

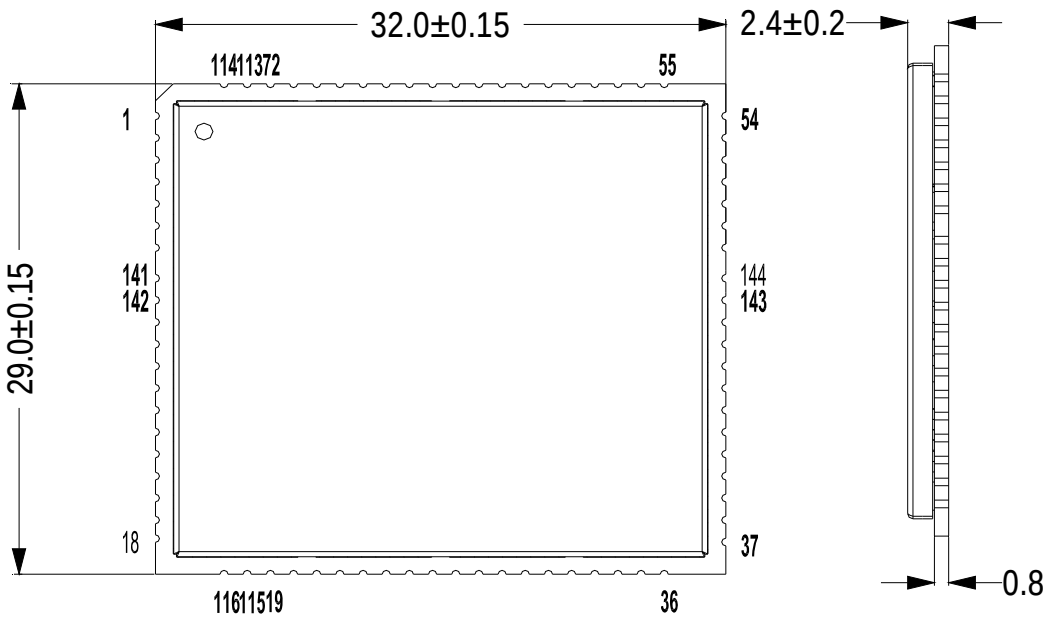

Figure 43: Module Top and Side Dimensions

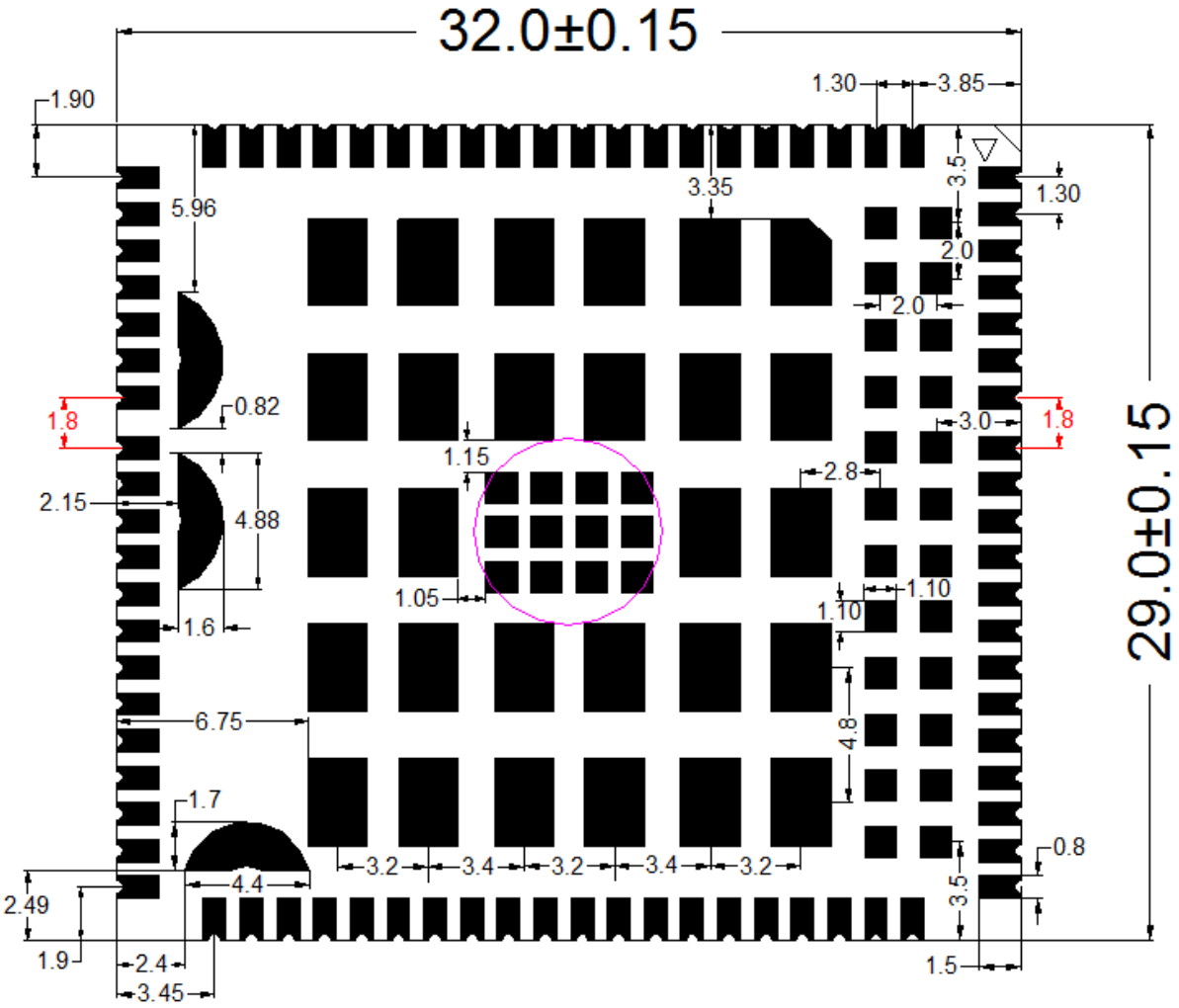

Figure 44: Module Bottom Dimensions (Bottom View)

7.2. Recommended Footprint

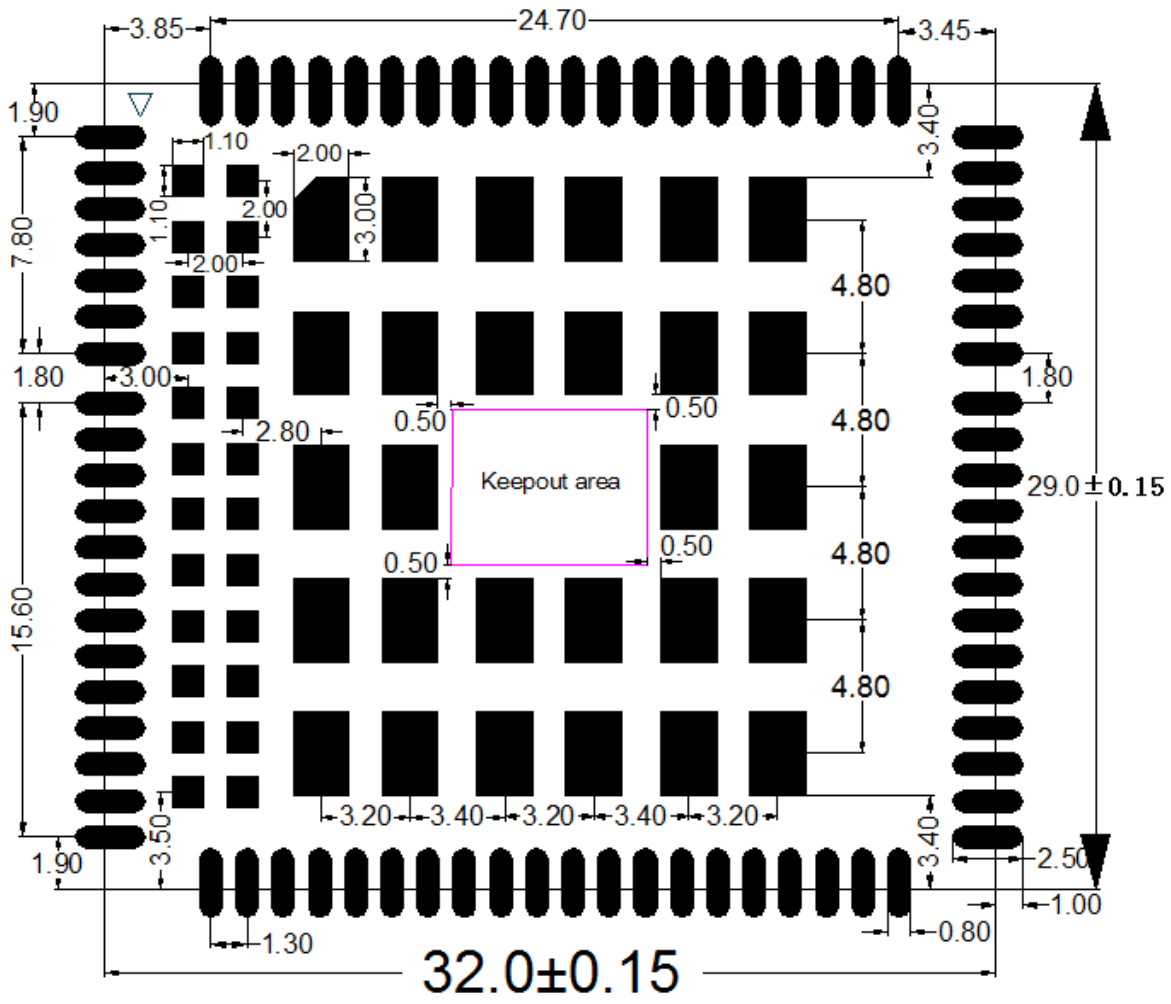

Figure 45: Recommended Footprint (Top View)

NOTES

1. The keepout area should not be designed.
2. For easy maintenance of the module, please keep about 3mm between the module and other components in thehost PCB.

7.3. Design Effect Drawings of the Module

Figure 46: Top View of the Module

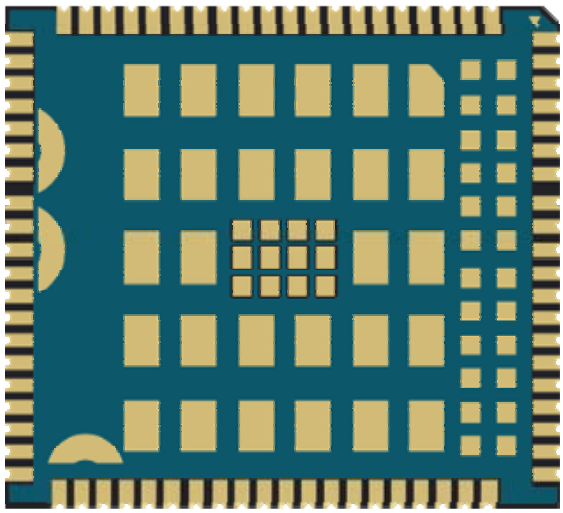

Figure 47: Bottom View of the Module

NOTE

These are design effect drawings of EC25 module. For more accurate pictures, please refer to the module that you get from Quectel.

8 Storage, Manufacturing and Packaging

8.1. Storage

EC25 is stored in a vacuum-sealed bag. It is rated at MSL 3, and its storage restrictions are listed below.

1. Shelf life in vacuum-sealed bag: 12 months at <40ºC/90%RH.

2. After the vacuum-sealed bag is opened, devices that will be subjected to reflow soldering or other high temperature processes must be:

   - Mounted within 168 hours at the factory environment of ≤30ºC/60%RH.
   - Stored at <10% RH.

3. Devices require bake before mounting, if any circumstances below occurs:

   - When the ambient temperature is 23ºC±5ºC and the humidity indicator card shows the humidity is >10% before opening the vacuum-sealed bag.
   - Device mounting cannot be finished within 168 hours at factory conditions of ≤30ºC/60%RH.

4. If baking is required, devices may be baked for 8 hours at 120ºC±5ºC.

NOTE

As the plastic packagecannot be subjected to high temperature, it should be removed from devices before high temperature (120ºC) baking. If shorter baking time is desired, please refer to *IPC/JEDECJ-STD-033* for baking procedure.

8.2. Manufacturing and Soldering

Push the squeegee to apply the solder paste on the surface of stencil, thus making the paste fill the stencil openings and then penetrate to the PCB. The force on the squeegee should be adjusted properlyso as to produce a clean stencil surface on a single pass. To ensure the module soldering quality, thethickness of stencil for the module is recommended to be 0.20mm. For more details, please refer to ***document [4]***.

It is suggested that the peak reflow temperature is 235ºC~245ºC (for SnAg3.0Cu0.5 alloy). The absolute maximum reflow temperature is 260ºC. To avoid damage to the module caused by repeated heating, it is suggested that the module should be mounted after reflow soldering for the other side of PCB has been completed. Recommended reflow soldering thermal profile is shown below:

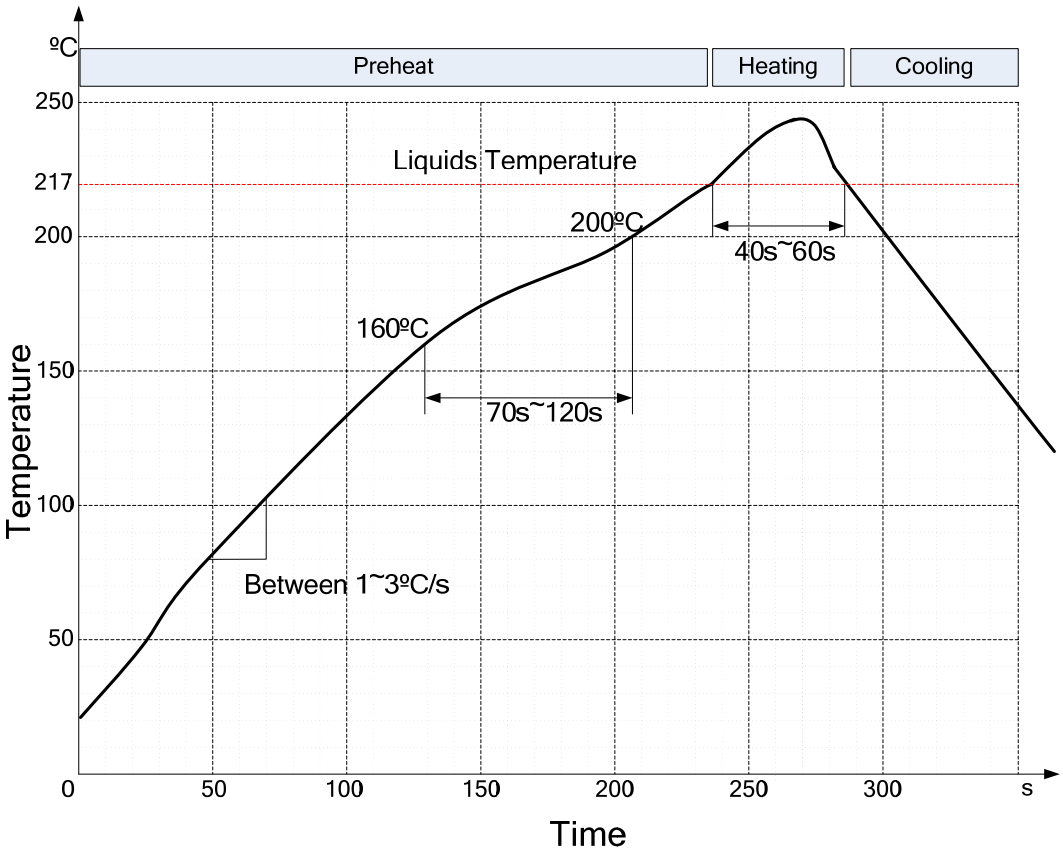

Figure 48: Reflow Soldering Thermal Profile

8.3. Packaging

EC25 is packaged in tap andreel carriers. One reel is 11.88m long and contains 250pcs modules. The figure below shows the package details, measured in mm.

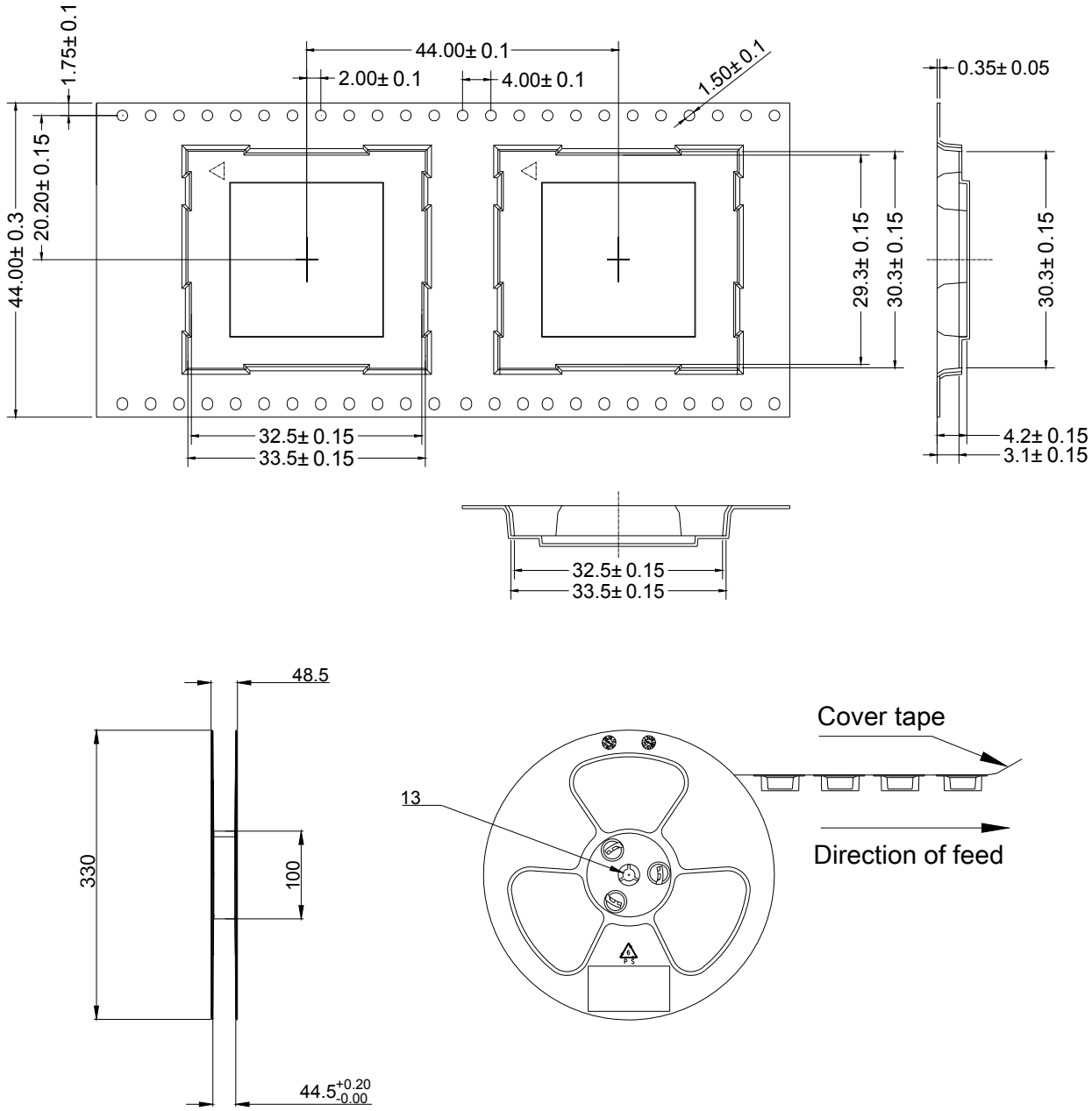

Figure 49: Tape and Reel Specifications

9 Appendix A References

Table 52: Related Documents

SN	Document Name	Remark
[1]	Quectel_EC2x&EG9x&EM05_Power_Management_Application_Note	Power management application notefor EC25, EC21, EC20 R2.0, EC20 R2.1, EG95, EG91 and EM05 modules
[2]	Quectel_EC25&EC21_AT_Commands_Manual	EC25 and EC21 AT commands manual
[3]	Quectel_EC25&EC21_GNSS_AT_Commands_Manual	EC25 and EC21 GNSS AT commands manual
[4]	Quectel_Module_Secondary_SMT_User_Guide	Module secondary SMT user guide
[5]	Quectel_EC25_Reference_Design	EC25 reference design
[6]	Quectel_RF_Layout_Application_Note	RF layout application note

Table 53: Terms and Abbreviations

Abbreviation	Description
AMR	Adaptive Multi-rate
bps	Bits Per Second
CHAP	Challenge Handshake Authentication Protocol
CS	Coding Scheme
CSD	Circuit Switched Data
CTS	Clear To Send
DC-HSPA+	Dual-carrier High Speed Packet Access
DFOTA	Delta Firmware Upgrade Over The Air

DL	Downlink
DTR	Data Terminal Ready
DTX	Discontinuous Transmission
EFR	Enhanced Full Rate
ESD	Electrostatic Discharge
FDD	Frequency Division Duplex
FR	Full Rate
GLONASS	GLObalnaya NAvigatsionnaya Sputnikovaya Sistema, the Russian Global Navigation Satellite System
GMSK	Gaussian Minimum Shift Keying
GNSS	Global Navigation Satellite System
GPS	Global Positioning System
GSM	Global System for Mobile Communications
HR	Half Rate
HSPA	High Speed Packet Access
HSDPA	High Speed Downlink Packet Access
HSUPA	High Speed Uplink Packet Access
I/O	Input/Output
Inorm	Normal Current
LED	Light Emitting Diode
LNA	Low Noise Amplifier
LTE	Long Term Evolution
MIMO	Multiple Input Multiple Output
MO	Mobile Originated
MS	Mobile Station (GSM engine)
MT	Mobile Terminated

PAP	Password Authentication Protocol
PCB	Printed Circuit Board
PDU	Protocol Data Unit
PPP	Point-to-Point Protocol
QAM	Quadrature Amplitude Modulation
QPSK	Quadrature Phase Shift Keying
RF	Radio Frequency
RHCP	Right Hand Circularly Polarized
Rx	Receive
SIM	Subscriber Identification Module
SIMO	Single Input Multiple Output
SMS	Short Message Service
TDD	Time Division Duplexing
TDMA	Time Division Multiple Access
TD-SCDMA	Time Division-Synchronous Code Division Multiple Access
TX	Transmitting Direction
UL	Uplink
UMTS	Universal Mobile Telecommunications System
URC	Unsolicited Result Code
USIM	Universal Subscriber Identity Module
Vmax	Maximum Voltage Value
Vnorm	Normal Voltage Value
Vmin	Minimum Voltage Value
V_{IH}max	Maximum Input High Level Voltage Value
V_{IH}min	Minimum Input High Level Voltage Value

V_{IL}max	Maximum Input Low Level Voltage Value
V_{IL}min	Minimum Input Low Level Voltage Value
V_{I}max	Absolute Maximum Input Voltage Value
V_{I}min	Absolute Minimum Input Voltage Value
V_{OH}max	Maximum Output High Level Voltage Value
V_{OH}min	Minimum Output High Level Voltage Value
V_{OL}max	Maximum Output Low Level Voltage Value
V_{OL}min	Minimum Output Low Level Voltage Value
VSWR	Voltage Standing Wave Ratio
WCDMA	Wideband Code Division Multiple Access
WLAN	Wireless Local Area Network

10 Appendix B GPRS Coding Schemes

Table 54: Description of Different Coding Schemes

Scheme	CS-1	CS-2	CS-3	CS-4
Code Rate	1/2	2/3	3/4	1
USF	3	3	3	3
Pre-coded USF	3	6	6	12
Radio Block excl.USF and BCS	181	268	312	428
BCS	40	16	16	16
Tail	4	4	4	-
Coded Bits	456	588	676	456
Punctured Bits	0	132	220	-
Data Rate Kb/s	9.05	13.4	15.6	21.4

11 Appendix C GPRS Multi-slot Classes

Twenty-nine classes of GPRS multi-slot modes are defined for MS in GPRS specification. Multi-slot classes are product dependent, and determine the maximum achievable data rates in both the uplink and downlink directions. Written as 3+1 or 2+2, the first number indicates the amount of downlink timeslots, while the second number indicates the amount of uplink timeslots. The active slots determine the total number of slots the GPRS device can use simultaneously for both uplink and downlink communications.

The description of different multi-slot classes is shown in the following table.

Table 55: GPRS Multi-slot Classes

Multislot Class	Downlink Slots	Uplink Slots	Active Slots
1	1	1	2
2	2	1	3
3	2	2	3
4	3	1	4
5	2	2	4
6	3	2	4
7	3	3	4
8	4	1	5
9	3	2	5
10	4	2	5
11	4	3	5
12	4	4	5
13	3	3	NA
14	4	4	NA

15	5	5	NA
16	6	6	NA
17	7	7	NA
18	8	8	NA
19	6	2	NA
20	6	3	NA
21	6	4	NA
22	6	4	NA
23	6	6	NA
24	8	2	NA
25	8	3	NA
26	8	4	NA
27	8	4	NA
28	8	6	NA
29	8	8	NA
30	5	1	6
31	5	2	6
32	5	3	6
33	5	4	6

12 Appendix D EDGE Modulationand Coding Schemes

Table 56: EDGE Modulation and Coding Schemes

Coding Scheme	Modulation	Coding Family	1 Timeslot	2 Timeslot	4 Timeslot
CS-1:	GMSK	/	9.05kbps	18.1kbps	36.2kbps
CS-2:	GMSK	/	13.4kbps	26.8kbps	53.6kbps
CS-3:	GMSK	/	15.6kbps	31.2kbps	62.4kbps
CS-4:	GMSK	/	21.4kbps	42.8kbps	85.6kbps
MCS-1	GMSK	C	8.80kbps	17.60kbps	35.20kbps
MCS-2	GMSK	B	11.2kbps	22.4kbps	44.8kbps
MCS-3	GMSK	A	14.8kbps	29.6kbps	59.2kbps
MCS-4	GMSK	C	17.6kbps	35.2kbps	70.4kbps
MCS-5	8-PSK	B	22.4kbps	44.8kbps	89.6kbps
MCS-6	8-PSK	A	29.6kbps	59.2kbps	118.4kbps
MCS-7	8-PSK	B	44.8kbps	89.6kbps	179.2kbps
MCS-8	8-PSK	A	54.4kbps	108.8kbps	217.6kbps
MCS-9	8-PSK	A	59.2kbps	118.4kbps	236.8kbps

FCC Certification Requirements.

According to the definition of mobile and fixed device is described in Part 2.1091(b), this device is a mobile device.

And the following conditions must be met:

1. This Modular Approval is limited to OEM installation for mobile and fixed applications only. The antenna installation and operating configurations of this transmitter, including any applicable source-based time-averaging duty factor, antenna gain and cable loss must satisfy MPE categorical Exclusion Requirements of 2.1091.

2. The EUT is a mobile device; maintain at least a 20 cm separation between the EUT and the user's body and must not transmit simultaneously with any other antenna or transmitter.

3.A label with the following statements must be attached to the host end product: This device contains FCC ID: XMR201808EC25AF.

4.To comply with FCC regulations limiting both maximum RF output power and human exposure to RF radiation, maximum antenna gain (including cable loss) must not exceed:

- ❒ WCDMA B2/LTE B2: <8dBi
- ❒ WCDMA B4LTE B4/B66: <5dBi
- ❒ WCDMA B5/LTE B5: <9.416dBi
- ❒ LTE B14: <9.255dBi
- ❒ LTE B13: <9.173dBi
- ❒ LTE B12: <8.734dBi
- ❒ LTE B71: <8.545dBi

5. This module must not transmit simultaneously with any other antenna or transmitter

6. The host end product must include a user manual that clearly defines operating requirements and conditions that must be observed to ensure compliance with current FCC RF exposure guidelines.

For portable devices, in addition to the conditions 3 through 6 described above, a separate approval is required to satisfy the SAR requirements of FCC Part 2.1093

If the device is used for other equipment that separate approval is required for all other operating configurations, including portable configurations with respect to 2.1093 and different antenna configurations.

For this device, OEM integrators must be provided with labeling instructions of finished products. Please refer to KDB784748 D01 v07, section 8. Page 6/7 last two paragraphs:

A certified modular has the option to use a permanently affixed label, or an electronic label. For a permanently affixed label, the module must be labeled with an FCC ID - Section 2.926 (see 2.2 Certification (labeling requirements) above). The OEM manual must provide clear instructions explaining to the OEM the labeling requirements, options and OEM user manual instructions that are required (see next paragraph).

For a host using a certified modular with a standard fixed label, if (1) the module's FCC ID is not visible when installed in the host, or (2) if the host is marketed so that end users do not have straightforward commonly used methods for access to remove the module so that the FCC ID of the module is visible; then an additional permanent label referring to the enclosed module:"Contains Transmitter Module FCC ID: XMR201808EC25AF" or "Contains FCC ID: XMR201808EC25AF" must be used. The host OEM user manual must also contain clear instructions on how end users can find and/or access the module and the FCC ID.

The final host / module combination may also need to be evaluated against the FCC Part 15B criteria for unintentional radiators in order to be properly authorized for operation as a Part 15 digital device.

The user's manual or instruction manual for an intentional or unintentional radiator shall caution the user that changes or modifications not expressly approved by the party responsible for compliance could void the user's authority to operate the equipment. In cases where the manual is provided only in a form other than paper, such as on a computer disk or over the Internet, the information required by this section may be included in the manual in that alternative form, provided the user can reasonably be expected to have the capability to access information in that form.

This device complies with part 15 of the FCC Rules. Operation is subject to the following two conditions:

(1) This device may not cause harmful interference, and (2) this device must accept any interference received, including interference that may cause undesired operation.

Changes or modifications not expressly approved by the manufacturer could void the user's authority to operate the equipment.

To ensure compliance with all non-transmitter functions the host manufacturer is responsible for ensuring compliance with the module(s) installed and fully operational. For example, if a host was previously authorized as an unintentional radiator under the Declaration of Conformity procedure without a transmitter certified module and a module is added, the host manufacturer is responsible for ensuring that the after the module is installed and operational the host continues to be compliant with the Part 15B unintentional radiator requirements.

IC Statement

IRSS-GEN

"This device complies with Industry Canada's licence-exempt RSSs. Operation is subject to the following two conditions: (1) This device may not cause interference; and (2) This device must accept any interference, including interference that may cause undesired operation of the device." or "Le présent appareil est conforme aux CNR d'Industrie Canada applicables aux appareils radio exempts de licence. L'exploitation est autorisée aux deux conditions suivantes :

1) l'appareil ne doit pas produire de brouillage; 2) l'utilisateur de l'appareil doit accepter tout brouillage radioélectrique subi, même si le brouillage est susceptible d'en compromettre le fonctionnement."
Déclaration sur l'exposition aux rayonnements RF
L'autre utilisé pour l'émetteur doit être installé pour fournir une distance de séparation d'au moins 20 cm de toutes les personnes et ne doit pas être colocalisé ou fonctionner conjointement avec une autre antenne ou un autre émetteur.
The host product shall be properly labeled to identify the modules within the host product.
The Innovation, Science and Economic Development Canada certification label of a module shall be clearly visible at all times when installed in the host product; otherwise, the host product must be labeled to display the Innovation, Science and Economic Development Canada certification number for the module, preceded by the word "Contains" or similar wording expressing the same meaning, as follows: "Contains IC: 10224A-2018EC25AF" or "where: 10224A-2018EC25AF is the module's certification number".
Le produit hôte doit être correctement étiqueté pour identifier les modules dans le produit hôte.

L'étiquette de certification d'Innovation, Sciences et Développement économique Canada d'un module doit être clairement visible en tout temps lorsqu'il est installédans le produit hôte; sinon, le produit hôte doit porter une étiquette indiquant le numéro de certification d'Innovation, Sciences et Développement économique Canada pour le module, précédé du mot «Contient» ou d'un libellé semblable exprimant la même signification, comme suit:
"Contient IC: 10224A-2018EC25AF" ou "où: 10224A-2018EC25AF est le numéro de certification du module".

EC25 Mini PCIe

Hardware Design

LTE Module Series

Rev. EC25_Mini_PCIe_Hardware_Design_V1.1

Date: 2017-01-24

www.quectel.com

Our aim is to provide customers with timely and comprehensive service. For any assistance, please contact our company headquarters:

Quectel Wireless Solutions Co., Ltd.
Office 501, Building 13, No.99, Tianzhou Road, Shanghai, China, 200233
Tel: +86 21 5108 6236
Email: info@quectel.com

Or our local office. For more information, please visit:
http://www.quectel.com/support/salesupport.aspx

For technical support, or to report documentation errors, please visit:
http://www.quectel.com/support/techsupport.aspx
Or email to: Support@quectel.com

GENERAL NOTES

QUECTEL OFFERS THE INFORMATION AS A SERVICE TO ITS CUSTOMERS. THE INFORMATION PROVIDED IS BASED UPON CUSTOMERS' REQUIREMENTS. QUECTEL MAKES EVERY EFFORT TO ENSURE THE QUALITY OF THE INFORMATION IT MAKES AVAILABLE. QUECTEL DOES NOT MAKE ANY WARRANTY AS TO THE INFORMATION CONTAINED HEREIN, AND DOES NOT ACCEPT ANY LIABILITY FOR ANY INJURY, LOSS OR DAMAGE OF ANY KIND INCURRED BY USE OF OR RELIANCE UPON THE INFORMATION. THE INFORMATION SUPPLIED HEREIN IS SUBJECT TO CHANGE WITHOUT PRIOR NOTICE.

COPYRIGHT

THE INFORMATION CONTAINED HERE IS PROPRIETARY TECHNICAL INFORMATION OF QUECTEL CO., LTD. TRANSMITTING, REPRODUCTION, DISSEMINATION AND EDITING OF THIS DOCUMENT AS WELL AS UTILIZATION OF THE CONTENT ARE FORBIDDEN WITHOUT PERMISSION. OFFENDERS WILL BE HELD LIABLE FOR PAYMENT OF DAMAGES. ALL RIGHTS ARE RESERVED IN THE EVENT OF A PATENT GRANT OR REGISTRATION OF A UTILITY MODEL OR DESIGN.

Copyright © Quectel Wireless Solutions Co., Ltd. 2017. All rights reserved.

About the Document

History

Revision	Date	Author	Description
1.0	2016-06-07	Mountain ZHOU/ Frank WANG	Initial
1.1	2017-01-24	Lyndon LIU/ Frank WANG	1. Deleted description of EC25-AUT Mini PCIe in Table 1. 2. Added description of EC25-AU and EC25-J Mini PCIe in Table 1. 3. Updated key features of EC25 Mini PCIe in Table 2. 4. Added current consumption in Chapter 4.7. 5. Updated conducted RF receiving sensitivity of EC25-A Mini PCIe in Table 17. 6. Added conducted RF receiving sensitivity of EC25-J Mini PCIe in Table 18.

Contents

About the Document **2**
Contents **3**
Table Index **5**
Figure Index **6**

1 Introduction **7**
1.1. Safety Information 8

2 Product Concept **9**
2.1. General Description 9
2.2. Description of Product Series 10
2.3. Key Features 11
2.4. Functional Diagram 13

3 Application Interface **14**
3.1. General Description 14
3.2. EC25 Mini PCIe Interface 14
3.2.1. Definition of Interface 14
3.2.2. Pin Assignment 17
3.3. Power Supply 18
3.4. USIM Card Interface 19
3.5. USB Interface 20
3.6. UART Interface 21
3.7. PCM and I2C Interfaces 22
3.8. Control Signals 24
3.8.1. RI Signal 25
3.8.2. DTR Signal 25
3.8.3. W_DISABLE# Signal 25
3.8.4. PERST# Signal 25
3.8.5. LED_WWAN# Signal 26
3.8.6. WAKE# Signal 27
3.9. Antenna Interfaces 27

4 Electrical and Radio Characteristics **29**
4.1. General Description 29
4.2. Power Supply Requirements 29
4.3. I/O Requirements 30
4.4. RF Characteristics 30
4.5. GNSS Receiver 32
4.6. ESD Characteristics 33
4.7. Current Consumption 33

5 Dimensions and Packaging **38**
5.1. General Description 38

5.2. Mechanical Dimensions of EC25 Mini PCIe 38
5.3. Standard Dimensions of Mini PCI Express 39
5.4. Packaging Specification 40

6 Appendix References 41

Table Index

TABLE 1: DESCRIPTION OF EC25 MINI PCIE 10
TABLE 2: KEY FEATURES OF EC25 MINI PCIE 11
TABLE 3: DEFINITION OF I/O PARAMETERS 14
TABLE 4: DESCRIPTION OF PINS 15
TABLE 5: DEFINITION OF VCC_3V3 AND GND PINS 18
TABLE 6: USIM PIN DEFINITION 19
TABLE 7: PIN DEFINITION OF USB INTERFACE 20
TABLE 8: PIN DEFINITION OF THE UART INTERFACE 21
TABLE 9: PIN DEFINITION OF PCM AND I2C INTERFACES 22
TABLE 10: PIN DEFINITION OF CONTROL SIGNALS 24
TABLE 11: RADIO OPERATIONAL STATES 25
TABLE 12: INDICATIONS OF NETWORK STATUS 26
TABLE 13: ANTENNA REQUIREMENTS 27
TABLE 14: POWER SUPPLY REQUIREMENTS 29
TABLE 15: I/O REQUIREMENTS 30
TABLE 16: EC25 MINI PCIE CONDUCTED RF OUTPUT POWER 30
TABLE 17: EC25-A MINI PCIE CONDUCTED RF RECEIVING SENSITIVITY 31
TABLE 18: EC25-J MINI PCIE CONDUCTED RF RECEIVING SENSITIVITY 31
TABLE 19: EC25-E MINI PCIE CONDUCTED RF RECEIVING SENSITIVITY 32
TABLE 20: EC25-V MINI PCIE CONDUCTED RF RECEIVING SENSITIVITY 32
TABLE 21: ESD CHARACTERISTICS OF EC25 MINI PCIE 33
TABLE 22: CURRENT CONSUMPTION OF EC25-A MINI PCIE 33
TABLE 23: CURRENT CONSUMPTION OF EC25-E MINI PCIE 34
TABLE 24: CURRENT CONSUMPTION OF EC25-V MINI PCIE 37
TABLE 25: GNSS CURRENT CONSUMPTION OF EC25 MINI PCIE SERIES MODULE 37
TABLE 26: RELATED DOCUMENTS 41
TABLE 27: TERMS AND ABBREVIATIONS 41

Figure Index

FIGURE 1: FUNCTIONAL DIAGRAM 13
FIGURE 2: PIN ASSIGNMENT 17
FIGURE 3: REFERENCE DESIGN OF POWER SUPPLY 18
FIGURE 4: REFERENCE CIRCUIT OF USIM CARD INTERFACE WITH A 6-PIN USIM CARD CONNECTOR 19
FIGURE 5: REFERENCE CIRCUIT OF USB INTERFACE 20
FIGURE 6: TIMING IN PRIMARY MODE 23
FIGURE 7: TIMING IN AUXILIARY MODE 23
FIGURE 8: REFERENCE CIRCUIT OF PCM APPLICATION WITH AUDIO CODEC 24
FIGURE 9: RI BEHAVIOR 25
FIGURE 10: TIMING OF RESETTING MODULE 26
FIGURE 11: LED_WWAN# SIGNAL REFERENCE CIRCUIT DIAGRAM 26
FIGURE 12: WAKE# BEHAVIOR 27
FIGURE 13: DIMENSIONS OF THE RF CONNECTOR (UNIT: MM) 28
FIGURE 14: MECHANICALS OF U.FL-LP CONNECTORS 28
FIGURE 15: MECHANICAL DIMENSIONS OF EC25 MINI PCIE (UNIT: MM) 38
FIGURE 16: STANDARD DIMENSIONS OF MINI PCI EXPRESS (UNIT: MM) 39
FIGURE 17: DIMENSIONS OF THE MINI PCI EXPRESS CONNECTOR (MOLEX 679100002, UNIT: MM) .. 40

1 Introduction

This document defines EC25 Mini PCIe module, and describes its hardware interfaces which are connected with your application as well as its air interfaces.

This document can help you to quickly understand the interface specifications, electrical and mechanical details as well as other related information of EC25 Mini PCIe module. To facilitate its application in different fields, relevant reference design documents are also provided. Associated with application note and user guide of EC25 Mini PCIe module, you can use the module to design and set up mobile applications easily.

1.1. Safety Information

The following safety precautions must be observed during all phases of the operation, such as usage, service or repair of any cellular terminal or mobile incorporating EC25 Mini PCIe module. Manufacturers of the cellular terminal should send the following safety information to users and operating personnel, and incorporate these guidelines into all manuals supplied with the product. If not so, Quectel assumes no liability for customers' failure to comply with these precautions.

	Full attention must be given to driving at all times in order to reduce the risk of an accident. Using a mobile while driving (even with a handsfree kit) causes distraction and can lead to an accident. You must comply with laws and regulations restricting the use of wireless devices while driving.
	Switch off the cellular terminal or mobile before boarding an aircraft. Make sure it is switched off. The operation of wireless appliances in an aircraft is forbidden, so as to prevent interference with communication systems. Consult the airline staff about the use of wireless devices on boarding the aircraft, if your device offers an Airplane Mode which must be enabled prior to boarding an aircraft.
	Switch off your wireless device when in hospitals, clinics or other health care facilities. These requests are desinged to prevent possible interference with sensitive medical equipment.
	Cellular terminals or mobiles operating over radio frequency signal and cellular network cannot be guaranteed to connect in all conditions, for example no mobile fee or with an invalid USIM/SIM card. While you are in this condition and need emergent help, please remember using emergency call. In order to make or receive a call, the cellular terminal or mobile must be switched on and in a service area with adequate cellular signal strength.
	Your cellular terminal or mobile contains a transmitter and receiver. When it is ON, it receives and transmits radio frequency energy. RF interference can occur if it is used close to TV set, radio, computer or other electric equipment.
	In locations with potentially explosive atmospheres, obey all posted signs to turn off wireless devices such as your phone or other cellular terminals. Areas with potentially explosive atmospheres include fuelling areas, below decks on boats, fuel or chemical transfer or storage facilities, areas where the air contains chemicals or particles such as grain, dust or metal powders, etc.

2 Product Concept

2.1. General Description

EC25 Mini PCIe module provides data connectivity on LTE-FDD, LTE-TDD, WCDMA and GSM networks with PCI Express Mini Card 1.2 standard interface. It supports embedded operating systems such as WinCE, Linux, Android, etc., and also provides audio, high-speed data transmission and GNSS functionalities for your applications.

EC25 Mini PCIe module can be applied in the following fields:

- PDA and Laptop Computer
- Remote Monitor System
- Vehicle System
- Wireless POS System
- Intelligent Meter Reading System
- Wireless Router and Switch
- Other Wireless Terminal Devices

This chapter generally introduces the following aspects of EC25 Mini PCIe module:

- Product Series
- Key Features
- Functional Diagram

NOTE

EC25 Mini PCIe contains **Telematics** version and **Data-only** version. **Telematics** version supports voice and data functions, while **Data-only** version only supports data function.

2.2. Description of Product Series

The following table shows the product series of EC25 Mini PCIe module.

Table 1: Description of EC25 Mini PCIe

Product Series	Description
EC25-A Mini PCIe	Support WCDMA: B2/B4/B5 Support LTE-FDD: B2/B4/B12 Support LTE/WCDMA receive diversity Support GNSS[1)] Support digital audio[2)]
EC25-AU Mini PCIe[3)]	Support GSM: 850/900/1800/1900MHz Support WCDMA: B1/B2/B5/B8 Support LTE-FDD: B1/B2/B3/B4/B5/B7/B8/B28 Support LTE-TDD: B40 Support LTE/WCDMA receive diversity[3)] Support GNSS[1)] Support digital audio[2)]
EC25-J Mini PCIe	Support WCDMA: B1/B6/B8/B19 Support LTE-FDD: B1/B3/B8/B18/B19/B26 Support LTE-TDD: B41 Support LTE/WCDMA receive diversity Support GNSS[1)] Support digital audio[2)]
EC25-E Mini PCIe	Support GSM: 900/1800MHz Support WCDMA: B1/B5/B8 Support LTE-FDD: B1/B3/B5/B7/B8/B20 Support LTE-TDD: B38/B40/B41 Support LTE/WCDMA receive diversity Support GNSS[1)] Support digital audio[2)]
EC25-V Mini PCIe	Support LTE-FDD: B4/B13 Support LTE receive diversity Support GNSS[1)] Support digital audio[2)]

NOTES

1. [1)] GNSS function is optional.
2. [2)] Digital audio (PCM) function is only supported in **Telematics** version.

3. [3] B2 band on EC25-AU Mini PCIe module does not support receive diversity.

2.3. Key Features

The following table describes the detailed features of EC25 Mini PCIe module.

Table 2: Key Features of EC25 Mini PCIe

Feature	Details
Function Interface	PCI Express Mini Card 1.2 Standard Interface
Power Supply	Supply voltage: 3.0~3.6V Typical supply voltage: 3.3V
Transmitting Power	Class 4 (33dBm±2dB) for GSM850 Class 4 (33dBm±2dB) for GSM900 Class 1 (30dBm±2dB) for DCS1800 Class 1 (30dBm±2dB) for PCS1900 Class E2 (27dBm±3dB) for GSM850 8-PSK Class E2 (27dBm±3dB) for GSM900 8-PSK Class E2 (26dBm±3dB) for DCS1800 8-PSK Class E2 (26dBm±3dB) for PCS1900 8-PSK Class 3 (24dBm+1/-3dB) for WCDMA bands Class 3 (23dBm±2dB) for LTE-FDD bands Class 3 (23dBm±2dB) for LTE-TDD bands
LTE Features	Support up to non-CA Cat 4 Support 1.4 to 20MHz RF bandwidth Support MIMO in DL direction FDD: Max 50Mbps (UL), 150Mbps (DL) TDD: Max 35Mbps (UL), 130Mbps (DL)
WCDMA Features	Support 3GPP R8 DC-HSPA+ Support 16-QAM, 64-QAM and QPSK modulation 3GPP R6 Cat 6 HSUPA: Max 5.76Mbps (UL) 3GPP R8 Cat 24 DC-HSPA+: Max 42Mbps (DL)
GSM Features	**R99:** CSD: 9.6kbps, 14.4kbps **GPRS:** Support GPRS multi-slot class 12 (12 by default) Coding scheme: CS-1, CS-2, CS-3 and CS-4 Maximum of four Rx time slots per frame

	EDGE: Support EDGE multi-slot class 12 (12 by default) Support GMSK and 8-PSK for different MCS (Modulation and Coding Scheme) Downlink coding schemes: CS 1-4, MCS 1-9 Uplink coding schemes: CS 1-4, MCS 1-9
Internet Protocol Features	Support TCP/UDP/PPP/FTP/HTTP/NTP/PING/QMI/HTTPS*/SMTP*/MMS*/FTPS*/SMTPS*/SSL* protocols Support the protocols PAP (Password Authentication Protocol) and CHAP (Challenge Handshake Authentication Protocol) usually used for PPP connections
SMS	Text and PDU mode Point to point MO and MT SMS cell broadcast SMS storage: ME by default
USIM Interface	Support USIM/SIM card: 1.8V, 3.0V
UART Interface	Baud rate can reach up to 230400bps, 115200bps by default Used for AT command communication
Audio Feature	Support one digital audio interface: PCM interface GSM: HR/FR/EFR/AMR/AMR-WB WCDMA: AMR/AMR-WB LTE: AMR/AMR-WB Support echo cancellation and noise suppression
PCM Interface	Support 8-bit A-law*, μ-law* and 16-bit linear data formats Support long frame synchronization and short frame synchronization Support master and slave mode, but must be the master in long frame synchronization
USB Interface	Compliant with USB 2.0 specification (slave only); the data transfer rate can reach up to 480Mbps Used for AT command communication, data transmission, firmware upgrade, software debugging, GNSS NMEA output and voice over USB* USB Driver: Windows XP, Windows Vista, Windows 7, Windows 8/8.1, Windows 10, Linux 2.6 or later, Android 4.0/4.2/4.4/5.0/5.1/6.0
Antenna Interface	Include main antenna, diversity antenna and GNSS antenna
Rx-diversity	Support LTE/WCDMA Rx-diversity
GNSS Features	Gen8C Lite of Qualcomm Protocol: NMEA 0183
AT Commands	Compliant with 3GPP TS 27.007, 27.005 and Quectel enhanced AT commands
Physical Characteristics	Size: (51.0±0.1) × (30.0±0.1) × (4.9±0.2 mm) Weight: approx. 9.8g

Temperature Range	Operation temperature range: -35°C ~ +75°C[1)] Extended temperature range: -40°C ~ +80°C[2)]
Firmware Upgrade	USB interface and DFOTA*
RoHS	All hardware components are fully compliant with EU RoHS directive

NOTES

1. "*" means under development.
2. [1)] Within operating temperature range, the module is 3GPP compliant.
3. [2)] Within extended temperature range, the module remains the ability to establish and maintain a voice, SMS, data transmission, emergency call, etc. There is no unrecoverable malfunction; there are also no effects on radio spectrum and no harm to radio network. Only one or more parameters like P_{out} might reduce in their value and exceed the specified tolerances. When the temperature returns to normal operating temperature levels, the module is compliant with 3GPP specification again.

2.4. Functional Diagram

The following figure shows the block diagram of EC25 Mini PCIe.

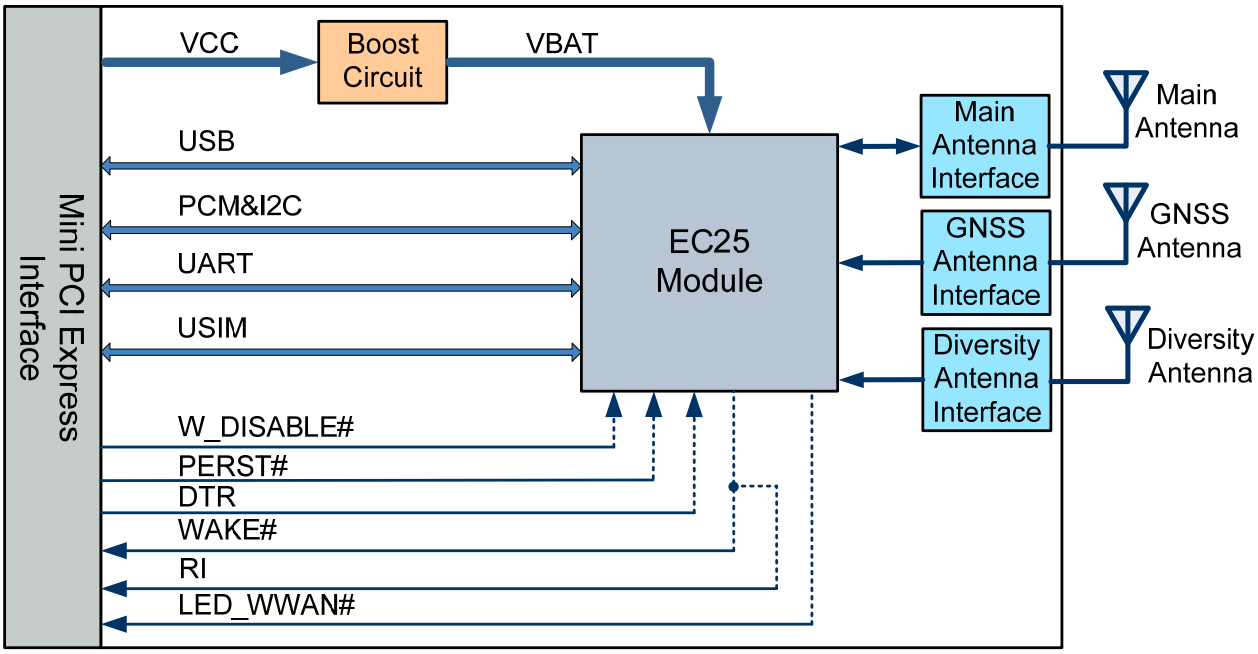

Figure 1: Functional Diagram

3 Application Interface

3.1. General Description

The physical connections and signal levels of EC25 Mini PCIe comply with PCI Express Mini CEM specifications. This chapter mainly describes the following interfaces' definition and application of EC25 Mini PCIe:

- Power supply
- USIM card interface
- USB interface
- UART interface
- PCM&I2C interfaces
- Control signals
- Antenna interface

3.2. EC25 Mini PCIe Interface

3.2.1. Definition of Interface

The following tables show the pin definition and description of EC25 Mini PCIe on the 52-pin application.

Table 3: Definition of I/O Parameters

Type	Description
IO	Bidirectional
DI	Digital input
DO	Digital output
OC	Open collector
PI	Power input
PO	Power output

Table 4: Description of Pins

Pin No.	Mini PCI Express Standard Name	EC25 Mini PCIe Pin Name	I/O	Description	Comment
1	WAKE#	WAKE#	OC	Output signal can be used to wake up the host.	
2	3.3Vaux	VCC_3V3	PI	3.3V DC supply	
3	COEX1	RESERVED		Reserved	
4	GND	GND		Mini card ground	
5	COEX2	RESERVED		Reserved	
6	1.5V	NC			
7	CLKREQ#	RESERVED		Reserved	
8	UIM_PWR	USIM_VDD	PO	Power source for the USIM card	
9	GND	GND		Mini card ground	
10	UIM_DATA	USIM_DATA	IO	USIM data signal	
11	REFCLK-	UART_RX	DI	UART receive data	Connect to DTE's TX
12	UIM_CLK	USIM_CLK	DO	USIM clock signal	
13	REFCLK+	UART_TX	DO	UART transmit data	Connect to DTE's RX
14	UIM_RESET	USIM_RST	DO	USIM reset signal	
15	GND	GND		Mini card ground	
16	UIM_VPP	RESERVED		Reserved	
17	RESERVED	RI	DO	Output signal can be used to wake up the host.	
18	GND	GND		Mini card ground	
19	RESERVED	RESERVED		Reserved	
20	W_DISABLE#	W_DISABLE#	DI	Disable wireless communications	Pull-up by default Active low
21	GND	GND		Mini card ground	
22	PERST#	PERST#	DI	Functional reset to the card	Active low
23	PERn0	UART_CTS	DI	UART clear to send	Connect to DTE's RTS

24	3.3Vaux	RESERVED		Reserved	
25	PERp0	UART_RTS	DO	UART request to send	Connect to DTE's CTS
26	GND	GND		Mini card ground	
27	GND	GND		Mini card ground	
28	1.5V	NC			
29	GND	GND		Mini card ground	
30	SMB_CLK	I2C_SCL	DO	I2C serial clock	Require external pull-up to 1.8V.
31	PETn0	DTR	DI	Sleep mode control	
32	SMB_DATA	I2C_SDA	IO	I2C serial data	Require external pull-up to 1.8V.
33	PETp0	RESERVED		Reserved	
34	GND	GND		Mini card ground	
35	GND	GND		Mini card ground	
36	USB_D-	USB_DM	IO	USB differential data (-)	
37	GND	GND		Mini card ground	
38	USB_D+	USB_DP	IO	USB differential data (+)	
39	3.3Vaux	VCC_3V3	PI	3.3V DC supply	
40	GND	GND		Mini card ground	
41	3.3Vaux	VCC_3V3	PI	3.3V DC supply	
42	LED_WWAN#	LED_WWAN#	OC	Active-low. LED signal for indicating the state of the card.	
43	GND	GND		Mini card ground	
44	LED_WLAN#	RESERVED		Reserved	
45	RESERVED	PCM_CLK*	IO	PCM clock signal	
46	LED_WPAN#	RESERVED		Reserved	
47	RESERVED	PCM_DOUT*	DO	PCM data output	

48	1.5V	NC		
49	RESERVED	PCM_DIN*	DI	PCM data input
50	GND	GND		Mini card ground
51	RESERVED	PCM_SYNC*	IO	PCM frame synchronization
52	3.3Vaux	VCC_3V3	PI	3.3V DC supply

NOTES

1. Keep all NC, reserved and unused pins unconnected.
2. "*" means the digital audio (PCM) function is only supported on **Telematics** version.

3.2.2. Pin Assignment

The following figure shows the pin assignment of EC25 Mini PCIe module. The top side contains EC25 module and antenna connectors.

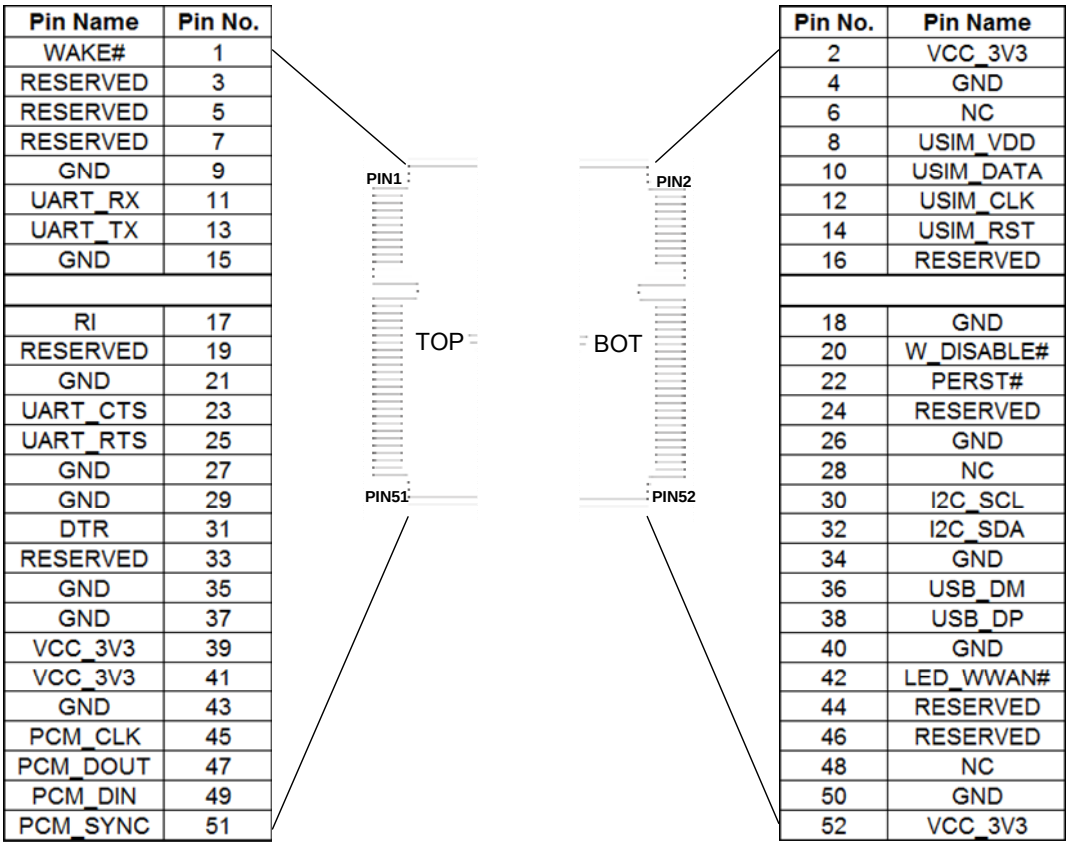

Figure 2: Pin Assignment

3.3. Power Supply

The following table shows pin definition of VCC_3V3 pins and ground pins.

Table 5: Definition of VCC_3V3 and GND Pins

Pin No.	Pin Name	I/O	Power Domain	Description
2, 39, 41, 52	VCC_3V3	PI	3.0~3.6V	3.3V DC supply
4, 9, 15, 18, 21, 26, 27, 29, 34, 35, 37, 40, 43, 50	GND			Mini card ground

The typical supply voltage of EC25 Mini PCIe is 3.3V. In the 2G networks, the input peak current may reach to 2.7A during the transmitting time. Therefore, the power supply must be able to provide enough current, and a bypass capacitor of no less than 470μF with low ESR should be used to prevent the voltage from dropping.

The following figure shows a reference design of power supply. The precision of resistor R2 and R3 is 1%, and the capacitor C3 needs a low ESR.

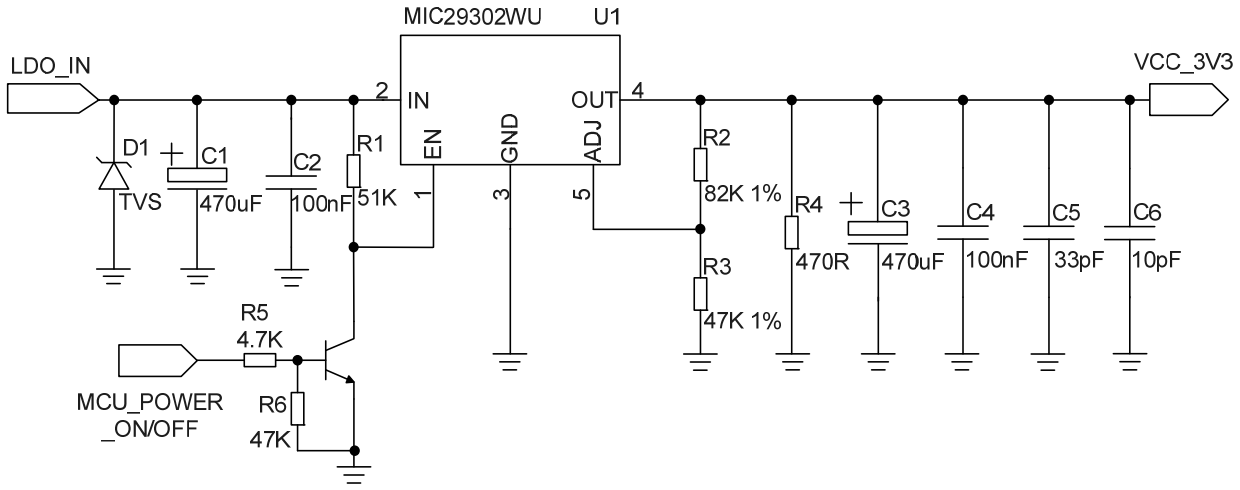

Figure 3: Reference Design of Power Supply

3.4. USIM Card Interface

The following table shows the pin definition of USIM card interface.

Table 6: USIM Pin Definition

Pin No.	Pin Name	I/O	Power Domain	Description
8	USIM_VDD	PO	1.8V/3.0V	Power source for the USIM card
10	USIM_DATA	IO	1.8V/3.0V	USIM data signal
12	USIM_CLK	DO	1.8V/3.0V	USIM clock signal
14	USIM_RST	DO	1.8V/3.0V	USIM reset signal

EC25 Mini PCIe supports 1.8V and 3.0V USIM cards. The following figure shows a reference design for a 6-pin USIM card connector.

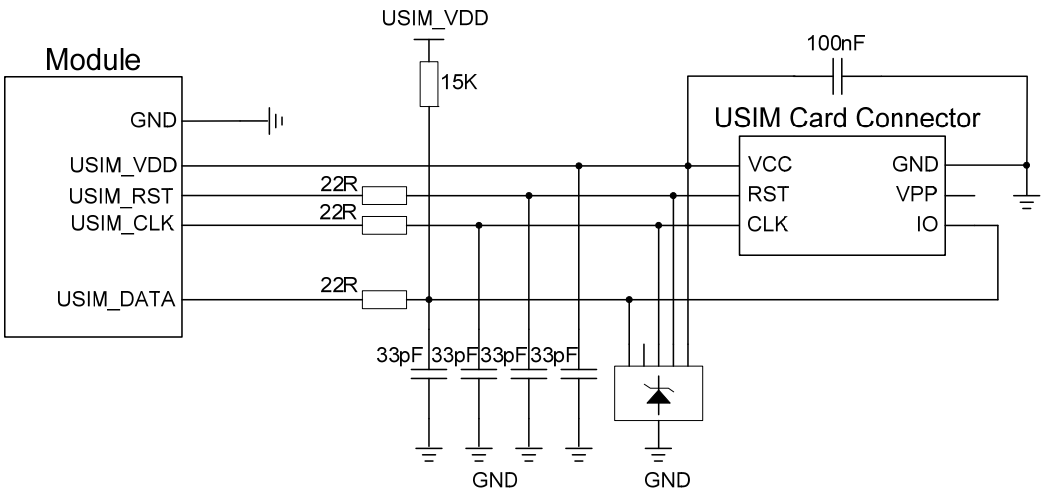

Figure 4: Reference Circuit of USIM Card Interface with a 6-Pin USIM Card Connector

In order to enhance the reliability and availability of the USIM card in your application, please follow the criteria below in USIM circuit design:

- Keep layout of USIM card as close to the module as possible. Keep the trace length as less than 200mm as possible.
- Keep USIM card signal away from RF and power supply traces.
- Keep the trace width of ground and USIM_VDD no less than 0.5mm to maintain the same electric potential. The decouple capacitor of USIM_VDD should be less than 1uF and must near to USIM card connector.

- To avoid cross-talk between USIM_DATA and USIM_CLK, keep them away from each other and shield them with surrounded ground.
- In order to offer good ESD protection, it is recommended to add a TVS whose parasitic capacitance should not be more than 50pF. The 22 ohm resistors should be added in series between the module and the USIM card so as to suppress EMI spurious transmission and enhance ESD protection. The 33pF capacitors are used for filtering interference of GSM900. Please note that the USIM peripheral circuit should be close to the USIM card connector.
- The pull-up resistor on USIM_DATA line can improve anti-jamming capability when long layout trace and sensitive occasion are applied, and should be placed close to the USIM card connector.

3.5. USB Interface

The following table shows the pin definition of USB interface.

Table 7: Pin Definition of USB Interface

Pin No.	Pin Name	I/O	Description	Comment
36	USB_DM	IO	USB differential data (-)	Require differential impedance of 90Ω
38	USB_DP	IO	USB differential data (+)	Require differential impedance of 90Ω

EC25 Mini PCIe is compliant with USB 2.0 specification. It can only be used as a slave device. Meanwhile, it supports high speed (480Mbps) mode and full speed (12Mbps) mode. The USB interface is used for AT command communication, data transmission, GNSS NMEA output, software debugging, firmware upgrade and voice over USB*. The following figure shows a reference circuit of USB interface.

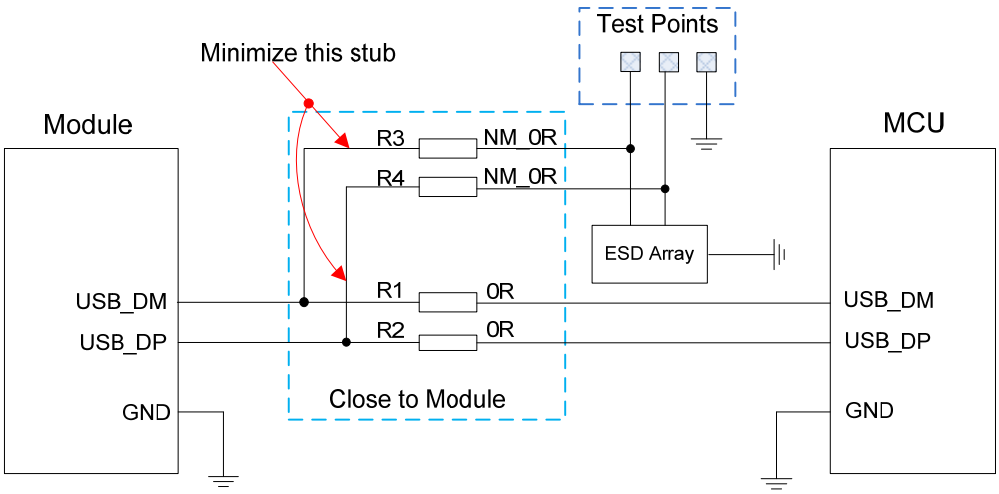

Figure 5: Reference Circuit of USB Interface

In order to ensure the integrity of USB data line signal, components R1, R2, R3 and R4 must be placed close to the module, and also these resistors should be placed close to each other. The extra stubs of trace must be as short as possible.

In order to ensure the USB interface design corresponding with the USB 2.0 specification, please comply with the following principles:

- It is important to route the USB signal traces as differential pairs with total grounding. The impedance of USB differential trace is 90 ohm.
- Do not route signal traces under crystals, oscillators, magnetic devices or RF signal traces. It is important to route the USB differential traces in inner-layer with ground shielding on not only upper and lower layers but also right and left sides.
- If USB connector is used, please keep the ESD protection components to the USB connector as close as possible. Pay attention to the influence of junction capacitance of ESD protection components on USB data lines. Typically, the capacitance value should be less than 2pF.
- Keep traces of USB data test points short to avoid noise coupled on USB data lines. If possible, reserve a 0R resistor on these two lines.

NOTES

1. There are three preconditions when enabling EC25 Mini PCIe to enter into the sleep mode:
   a) Execute **AT+QSCLK=1** command to enable the sleep mode. Please refer to ***document [2]*** for details.
   b) DTR pin should be kept in high level (pull-up internally).
   c) USB interface on Mini PCIe must be connected with the USB interface of the host and please guarantee the USB of the host is in suspended state.
2. "*" means under development.

3.6. UART Interface

The following table shows the pin definition of the UART interface.

Table 8: Pin Definition of the UART Interface

Pin No.	EC25 Mini PCIe Pin Name	I/O	Power Domain	Description
11	UART_RX	DI	3.3V	UART receive data
13	UART_TX	DO	3.3V	UART transmit data
23	UART_CTS	DI	3.3V	UART clear to send
25	UART_RTS	DO	3.3V	UART request to send

The UART interface supports 9600, 19200, 38400, 57600, 115200 and 230400bps baud rate. The default is 115200bps. This interface can be used for AT command communication.

NOTE

AT+IPR command can be used to set the baud rate of the UART, and **AT+IFC** command can be used to set the hardware flow control (hardware flow control is disabled by default). Please refer to ***document [2]*** for details.

3.7. PCM and I2C Interfaces

The following table shows the pin definition of PCM and 12C interfaces that can be applied in audio codec design.

Table 9: Pin Definition of PCM and I2C Interfaces

Pin No.	Pin Name	I/O	Power Domain	Description
45	PCM_CLK	IO	1.8V	PCM clock signal
47	PCM_DOUT	DO	1.8V	PCM data output
49	PCM_DIN	DI	1.8V	PCM data input
51	PCM_SYNC	IO	1.8V	PCM frame synchronization
30	I2C_SCL	DO	1.8V	I2C serial clock, require external pull-up to 1.8V.
32	I2C_SDA	IO	1.8V	I2C serial data, require external pull-up to 1.8V.

EC25 Mini PCIe provides one PCM digital interface, which supports 8-bit A-law* and μ-law*, and also supports 16-bit linear data formats and the following modes:

- Primary mode (short frame synchronization, works as either master or slave)
- Auxiliary mode (long frame synchronization, works as master only)

NOTE

"*" means under development.

In primary mode, the data is sampled on the falling edge of the PCM_CLK and transmitted on the rising edge. The PCM_SYNC falling edge represents the MSB. In this mode, PCM_CLK supports 128, 256, 512, 1024 and 2048kHz for different speed codecs. The following figure shows the timing relationship in primary mode with 8kHz PCM_SYNC and 2048kHz PCM_CLK.

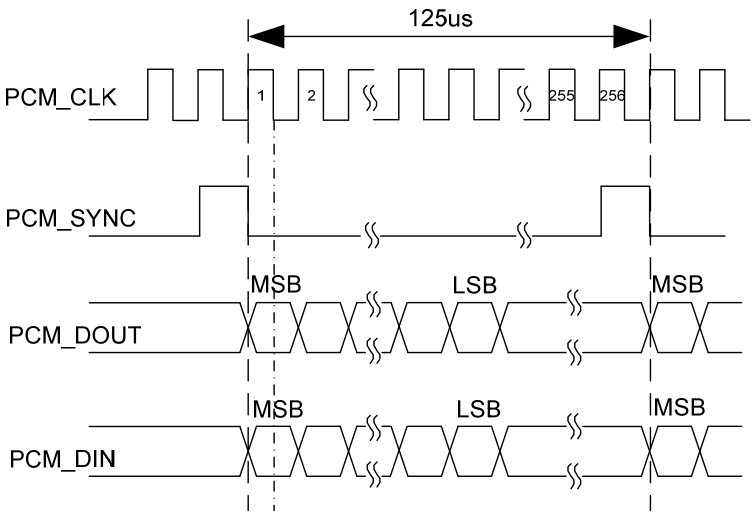

Figure 6: Timing in Primary Mode

In auxiliary mode, the data is sampled on the falling edge of the PCM_CLK and transmitted on the rising edge; while the PCM_SYNC rising edge represents the MSB. In this mode, PCM interface operates with a 128kHz PCM_CLK and an 8kHz, 50% duty cycle PCM_SYNC only. The following figure shows the timing relationship in auxiliary mode with 8kHz PCM_SYNC and 128kHz PCM_CLK.

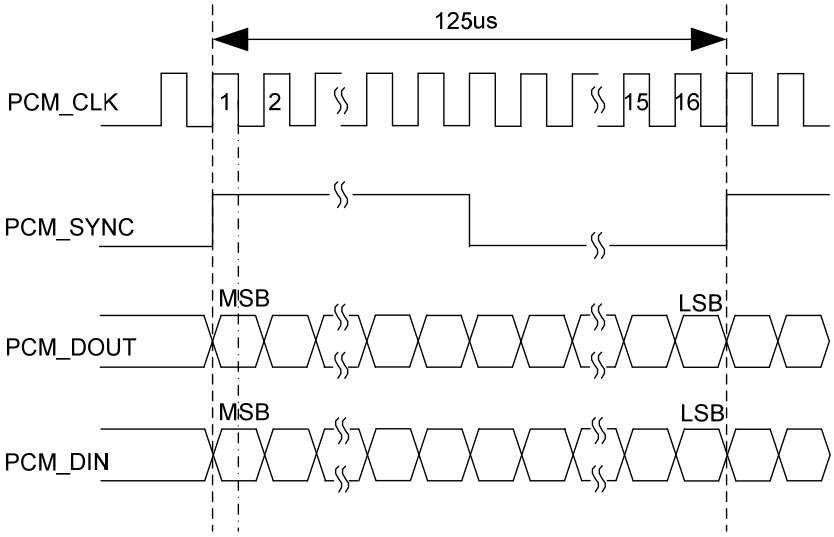

Figure 7: Timing in Auxiliary Mode

Clock and mode can be configured by AT command, and the default configuration is master mode using short frame synchronization format with 2048kHz PCM_CLK and 8kHz PCM_SYNC. In addition, EC25 Mini PCIe's firmware has integrated the configuration on some PCM codec's application with I2C interface. Please refer to ***document [2]*** for details about **AT+QDAI** command.

The following figure shows a reference design of PCM interface with an external codec IC.

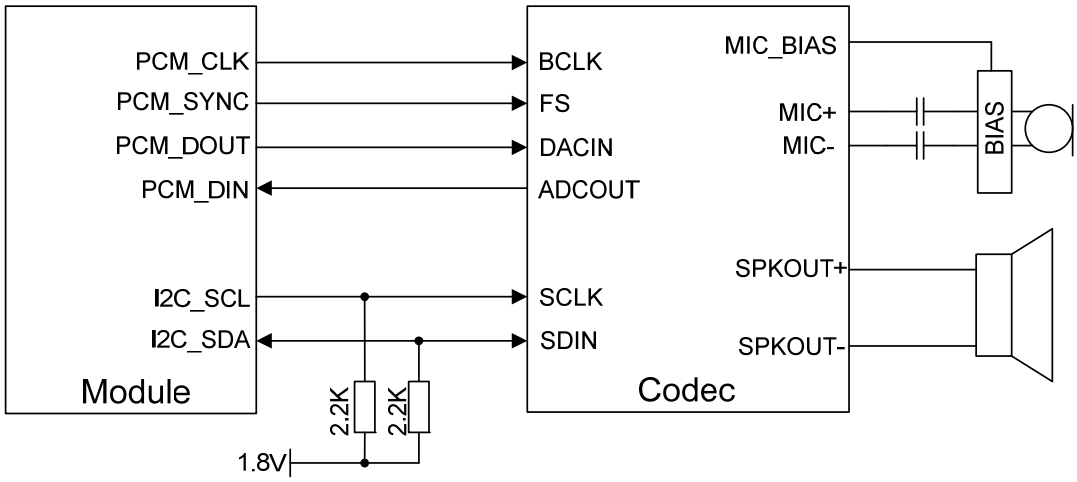

Figure 8: Reference Circuit of PCM Application with Audio Codec

3.8. Control Signals

The following table shows the pin definition of control signals.

Table 10: Pin Definition of Control Signals

Pin No.	Pin Name	I/O	Power Domain	Description
17	RI	DO	3.3V	Output signal can be used to wake up the host.
31	DTR	DI	3.3V	Sleep mode control
20	W_DISABLE#	DI	3.3V	Disable wireless communications; pull-up by default, active low.
22	PERST#	DI	3.3V	Functional reset to the card; active low.
42	LED_WWAN#	OC		Active-low. LED signal for indicating the state of the module.
1	WAKE#	OC		Output signal can be used to wake up the host.

3.8.1. RI Signal

The RI signal can be used to wake up the host. When URC returns, there will be the following behavior on the RI pin after executing **AT+QCFG="risignaltype","physical"** command.

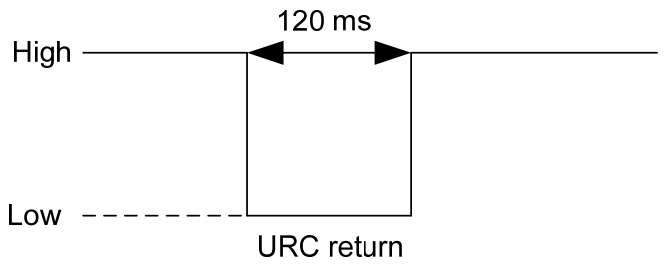

Figure 9: RI Behavior

3.8.2. DTR Signal

The DTR signal supports sleep control function. Driving it to low level will wake up the module.

3.8.3. W_DISABLE# Signal

EC25 Mini PCIe provides W_DISABLE# signal to disable wireless communications through hardware operation. The following table shows the radio operational states of the module. Please refer to ***document [2]*** for related AT commands.

Table 11: Radio Operational States

W_DISABLE#	AT Commands	Radio Operation
High Level	**AT+CFUN=1**	Enabled
High Level	**AT+CFUN=0** **AT+CFUN=4**	Disabled
Low Level	**AT+CFUN=0** **AT+CFUN=1** **AT+CFUN=4**	Disabled

3.8.4. PERST# Signal

The PERST# signal can be used to force a hardware reset on the card. You can reset the module by driving the PERST# to a low level voltage with the time frame of 150~460ms and then releasing it. The reset scenario is illustrated in the following figure.

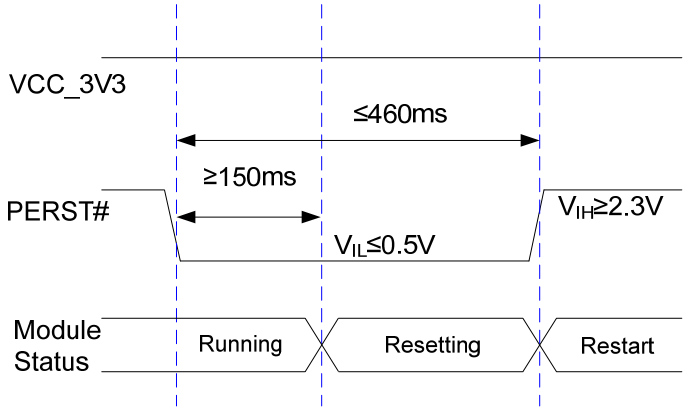

Figure 10: Timing of Resetting Module

3.8.5. LED_WWAN# Signal

The LED_WWAN# signal of EC25 Mini PCIe is used to indicate the network status of the module, which can absorb the current up to 40mA. According to the following circuit, in order to reduce the current of the LED, a resistor must be placed in series with the LED. The LED is emitting light when the LED_WWAN# output signal is active low.

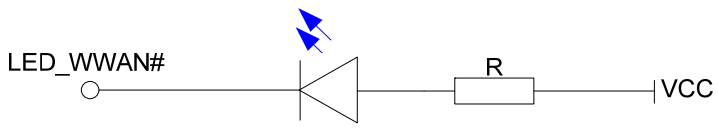

Figure 11: LED_WWAN# Signal Reference Circuit Diagram

The following table shows the network status indications of the LED_WWAN# signal.

Table 12: Indications of Network Status

LED_WWAN#	Description
Low Level (Light on)	Registered on network
High-impedance (Light off)	● No network coverage or not registered ● W_DISABLE# signal is at low level. (Disable the RF) ● **AT+CFUN=0**, **AT+CFUN=4**

3.8.6. WAKE# Signal

The WAKE# signal is an open collector signal which is similar to RI signal, but a host pull-up resistor and **AT+QCFG="risignaltype","physical"** command are required. When URC returns, there will be 120ms low level pulse output as below.

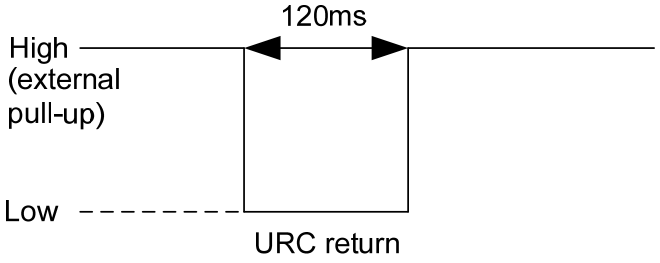

Figure 12: WAKE# Behavior

3.9. Antenna Interfaces

EC25 Mini PCIe antenna interfaces include a main antenna interface, an Rx-diversity antenna interface and a GNSS antenna interface. And Rx-diversity function is enabled by default.

The following table shows the requirement on main antenna, Rx-diversity antenna and GNSS antenna.

Table 13: Antenna Requirements

Type	Requirements
GNSS	Frequency range: 1561~1615MHz Polarization: RHCP or linear VSWR: <2 (Typ.) Passive antenna gain: >0dBi
GSM/WCDMA/LTE	VSWR: ≤2 Gain (dBi): 1 Max Input Power (W): 50 Input Impedance (ohm): 50 Polarization Type: Vertical Cable Insertion Loss: <1dB (GSM900, WCDMA B5/B8, LTE B5/B8/B12/B17/B20) Cable Insertion Loss: <1.5dB (GSM1800, WCDMA B1/B2/B3/B4, LTE B1/B2/B3/B4) Cable insertion loss: <2dB (LTE B7/B38/B40/B41)

The following figure shows the overall sizes of RF connector.

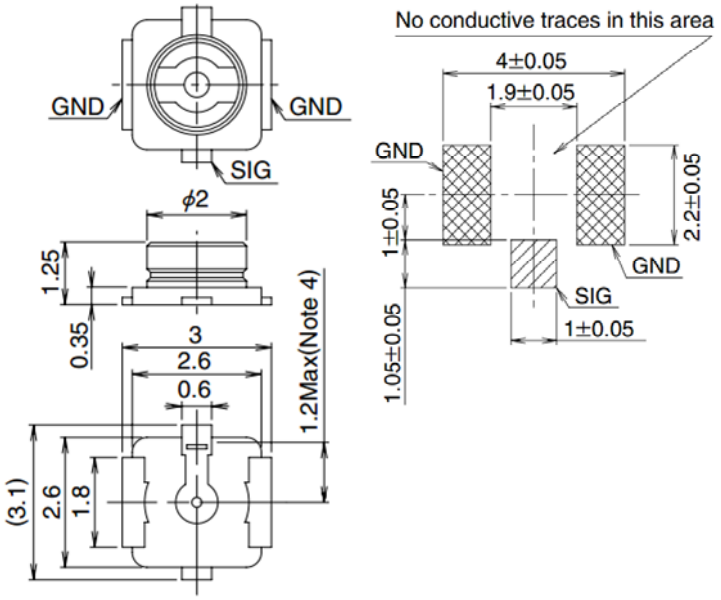

Figure 13: Dimensions of the RF Connector (Unit: mm)

U.FL-LP serial connectors listed in the following figure can be used to match the RF connector.

	U.FL-LP-040	U.FL-LP-066	U.FL-LP(V)-040	U.FL-LP-062	U.FL-LP-088
Part No.	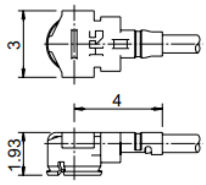	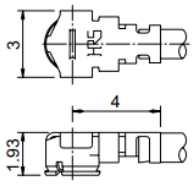	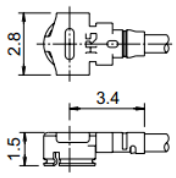	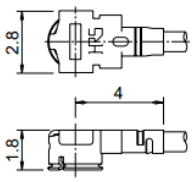	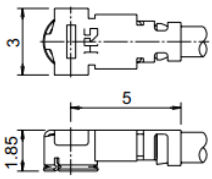
Mated Height	2.5mm Max. (2.4mm Nom.)	2.5mm Max. (2.4mm Nom.)	2.0mm Max. (1.9mm Nom.)	2.4mm Max. (2.3mm Nom.)	2.4mm Max. (2.3mm Nom.)
Applicable cable	Dia. 0.81mm Coaxial cable	Dia. 1.13mm and Dia. 1.32mm Coaxial cable	Dia. 0.81mm Coaxial cable	Dia. 1mm Coaxial cable	Dia. 1.37mm Coaxial cable
Weight (mg)	53.7	59.1	34.8	45.5	71.7
RoHS	YES				

Figure 14: Mechanicals of U.FL-LP Connectors

4 Electrical and Radio Characteristics

4.1. General Description

This chapter mainly describes the following electrical and radio characteristics of EC25 Mini PCIe:

- Power supply requirements
- I/O requirements
- Current consumption
- RF characteristics
- GNSS receiver
- ESD characteristics

4.2. Power Supply Requirements

The input voltage of EC25 Mini PCIe is 3.3V±9%, as specified by *PCI Express Mini CEM Specifications 1.2*. The following table shows the power supply requirements of EC25 Mini PCIe.

Table 14: Power Supply Requirements

Parameter	Description	Min.	Typ.	Max.	Unit
VCC_3V3	Power Supply	3.0	3.3	3.6	V

4.3. I/O Requirements

The following table shows the I/O requirements of EC25 Mini PCIe.

Table 15: I/O Requirements

Parameter	Description	Min.	Max.	Unit
V_{IH}	Input High Voltage	0.7 × VCC_3V3	VCC_3V3+0.3	V
V_{IL}	Input Low Voltage	-0.3	0.3 × VCC_3V3	V
V_{OH}	Output High Voltage	VCC_3V3-0.5	VCC_3V3	V
V_{OL}	Output Low Voltage	0	0.4	V

NOTES

1. The PCM and I2C interfaces belong to 1.8V power domain and other I/O interfaces belong to VCC_3V3 power domain.
2. The maximum voltage value of V_{IL} for PERST# signal and W_DISABLE# signal is 0.5V.

4.4. RF Characteristics

The following tables show the conducted RF output power and receiving sensitivity of EC25 Mini PCIe module.

Table 16: EC25 Mini PCIe Conducted RF Output Power

Frequency	Max.	Min.
GSM850/GSM900	33dBm±2dB	5dBm±5dB
DCS1800/PCS1900	30dBm±2dB	0dBm±5dB
GSM850/GSM900 (8-PSK)	27dBm±3dB	5dBm±5dB
DCS1800/PCS1900 (8-PSK)	26dBm±3dB	0dBm±5dB
WCDMA bands	24dBm+1/-3dB	<-50dBm
LTE-FDD bands	23dBm±2dB	<-44dBm

LTE-TDD bands	23dBm±2dB	<-44dBm

Table 17: EC25-A Mini PCIe Conducted RF Receiving Sensitivity

Frequency	Primary	Diversity	SIMO	3GPP (SIMO)
WCDMA B2	-110.0dBm	/	/	-104.7dBm
WCDMA B4	-110.0dBm	/	/	-106.7dBm
WCDMA B5	-110.5dBm	/	/	-104.7dBm
LTE FDD B2 (10M)	-98.0dBm	-98.0dBm	-101.0dBm	-94.3dBm
LTE FDD B4 (10M)	-97.5dBm	-99.0dBm	-101.0dBm	-96.3dBm
LTE FDD B12 (10M)	-96.5dBm	-98.0dBm	-101.0dBm	-93.3dBm

Table 18: EC25-J Mini PCIe Conducted RF Receiving Sensitivity

Frequency	Primary	Diversity	SIMO	3GPP (SIMO)
WCDMA B1	-110.0dBm	/	/	-106.7dBm
WCDMA B6	-110.5dBm	/	/	-106.7dBm
WCDMA B8	-110.5dBm	/	/	-106.7dBm
WCDMA B19	-110.5dBm	/	/	-106.7dBm
LTE-FDD B1 (10M)	-97.5dBm	-98.7dBm	-100.2dBm	-96.3dBm
LTE-FDD B3 (10M)	-96.5dBm	-97.1dBm	-100.5dBm	-93.3dBm
LTE-FDD B8 (10M)	-98.4dBm	-99.0dBm	-101.2dBm	-93.3dBm
LTE-FDD B18 (10M)	-99.5dBm	-99.0dBm	-101.7dBm	-96.3dBm
LTE-FDD B19 (10M)	-99.2dBm	-99.0dBm	-101.4dBm	-96.3dBm
LTE-FDD B26 (10M)	-99.5dBm	-99.0dBm	-101.5dBm	-93.8dBm
LTE-TDD B41 (10M)	-95.0dBm	-95.7dBm	-99.0dBm	-94.3dBm

Table 19: EC25-E Mini PCIe Conducted RF Receiving Sensitivity

Frequency	Primary	Diversity	SIMO	3GPP (SIMO)
GSM900	-109.0dBm	/	/	-102.0dBm
DCS1800	-109.0dBm	/	/	-102.0dbm
WCDMA B1	-110.5dBm	/	/	-106.7dBm
WCDMA B5	-110.5dBm	/	/	-104.7dBm
WCDMA B8	-110.5dBm	/	/	-103.7dBm
LTE-FDD B1 (10M)	-98.0dBm	-98.0dBm	-101.5dBm	-96.3dBm
LTE-FDD B3 (10M)	-96.5dBm	-98.5dBm	-101.5dBm	-93.3dBm
LTE-FDD B5 (10M)	-98.0dBm	-98.5dBm	-101.0dBm	-94.3dBm
LTE-FDD B7 (10M)	-97.0dBm	-94.5dBm	-99.5dBm	-94.3dBm
LTE-FDD B8 (10M)	-97.0dBm	-97.0dBm	-101.0dBm	-93.3dBm
LTE-FDD B20 (10M)	-97.5dBm	-99.0dBm	-102.5dBm	-93.3dBm
LTE-TDD B38 (10M)	-96.7dBm	-97.0dBm	-100.0dBm	-96.3dBm
LTE-TDD B40 (10M)	-96.3dBm	-98.0dBm	-101.0dBm	-96.3dBm
LTE-TDD B41 (10M)	-95.2dBm	-95.7dBm	-99.0dBm	-94.3dBm

Table 20: EC25-V Mini PCIe Conducted RF Receiving Sensitivity

Frequency	Primary	Diversity	SIMO	3GPP (SIMO)
LTE-FDD B4 (10M)	-97.5dBm	-99.0dBm	-101.0dBm	-96.3dBm
LTE-FDD B13 (10M)	-95.0dBm	-97.0dBm	-100.0dBm	-93.3dBm

4.5. GNSS Receiver

EC25 Mini PCIe integrates a GNSS receiver that supports IZat Gen 8C Lite of Qualcomm (GPS, GLONASS, BeiDou, Galileo, QZSS). Meanwhile, it supports Qualcomm gpsOneXTRA technology (one kind of A-GNSS). This technology will download XTRA file from the internet server to enhance the TTFF.

XTRA file contains predicted GPS and GLONASS satellites coordinates and clock biases valid for up to 7 days. It is best if XTRA file is downloaded every 1-2 days. Additionally, EC25 Mini PCIe can support standard NMEA-0183 protocol and output NMEA messages with 1Hz via USB NMEA interface.

EC25 Mini PCIe GNSS engine is switched off by default. You must switch on it by AT command. Please refer to ***document [3]*** for more details about GNSS engine technology and configurations. A passive antenna should be used for the GNSS engine.

4.6. ESD Characteristics

The following table shows the ESD characteristics of EC25 Mini PCIe.

Table 21: ESD Characteristics of EC25 Mini PCIe

Part	Contact Discharge	Air Discharge	Unit
Power Supply and GND	+/-5	+/-10	kV
Antenna Interface	+/-4	+/-8	kV
USB Interface	+/-4	+/-8	kV
USIM Interface	+/-4	+/-8	kV
Others	+/-0.5	+/-1	kV

4.7. Current Consumption

The following tables describe the current consumption of EC25 Mini PCIe series module.

Table 22: Current Consumption of EC25-A Mini PCIe

Parameter	Description	Conditions	Typ.	Unit
I_{VBAT}	Sleep state	**AT+CFUN=0** (USB disconnected)	3.6	mA
		WCDMA PF=64 (USB disconnected)	4.4	mA
		WCDMA PF=128 (USB disconnected)	3.8	mA
		LTE-FDD PF=64 (USB disconnected)	5.9	mA

		LTE-FDD PF=128 (USB disconnected)	4.8	mA
	Idle state	WCDMA PF=64 (USB disconnected)	27.0	mA
		WCDMA PF=64 (USB connected)	40.0	mA
		LTE-FDD PF=64 (USB disconnected)	43.0	mA
		LTE-FDD PF=64 (USB connected)	59.0	mA
	WCDMA data transfer (GNSS OFF)	WCDMA B2 HSDPA @22.63dBm	764.0	mA
		WCDMA B2 HSUPA @23.19dBm	741.0	mA
		WCDMA B4 HSDPA @22.45dBm	745.0	mA
		WCDMA B4 HSUPA @22.57dBm	752.0	mA
		WCDMA B5 HSDPA @22.49dBm	616.0	mA
		WCDMA B5 HSUPA @22.43dBm	637.0	mA
	LTE data transfer (GNSS OFF)	LTE-FDD B2 @22.92dBm	977.0	mA
		LTE-FDD B4 @23.42dBm	1094.0	mA
		LTE-FDD B12 @23.39dBm	847.0	mA
	WCDMA voice call	WCDMA B2 @23.59dBm	861.0	mA
		WCDMA B4 @23.47dBm	812.0	mA
		WCDMA B5 @23.46dBm	683.0	mA

Table 23: Current Consumption of EC25-E Mini PCIe

Parameter	Description	Conditions	Typ.	Unit
I_{VBAT}	Sleep state	**AT+CFUN=0** (USB disconnected)	3.9	mA
		GSM DRX=2 (USB disconnected)	5.1	mA
		GSM DRX=9 (USB disconnected)	4.3	mA
		WCDMA PF=64 (USB disconnected)	5.5	mA
		WCDMA PF=128 (USB disconnected)	4.8	mA
		LTE-FDD PF=64 (USB disconnected)	5.8	mA

		LTE-FDD PF=128 (USB disconnected)	5.0	mA
		LTE-TDD PF=64 (USB disconnected)	5.8	mA
		LTE-TDD PF=128 (USB disconnected)	4.9	mA
	Idle state	GSM DRX=5 (USB disconnected)	30.0	mA
		GSM DRX=5 (USB connected)	43.0	mA
		WCDMA PF=64 (USB disconnected)	31.0	mA
		WCDMA PF=64 (USB connected)	45.0	mA
		LTE-FDD PF=64 (USB disconnected)	31.0	mA
		LTE-FDD PF=64 (USB connected)	44.0	mA
		LTE-TDD PF=64 (USB disconnected)	32.0	mA
		LTE-TDD PF=64 (USB connected)	44.0	mA
	GPRS data transfer (GNSS OFF)	GSM900 4DL/1UL @33.08dBm	372.0	mA
		GSM900 3DL/2UL @31.03dBm	626.0	mA
		GSM900 2DL/3UL @29.86dBm	706.0	mA
		GSM900 1DL/4UL @29.44dBm	767.0	mA
		DCS1800 4DL/1UL @30.39dBm	262.0	mA
		DCS1800 3DL/2UL @30.19dBm	417.0	mA
		DCS1800 2DL/3UL @30.02dBm	564.0	mA
		DCS1800 1DL/4UL @29.86dBm	709.0	mA
	EDGE data transfer (GNSS OFF)	GSM900 4DL/1UL @27.59dBm	233.0	mA
		GSM900 3DL/2UL @27.45dBm	370.0	mA
		GSM900 2DL/3UL @27.31dBm	500.0	mA
		GSM900 1DL/4UL @27.14dBm	623.0	mA
		DCS1800 4DL/1UL @26.24dBm	224.0	mA
		DCS1800 3DL/2UL @26.13dBm	334.0	mA

		DCS1800 2DL/3UL @25.97dBm	440.0	mA
		DCS1800 1DL/4UL @25.82dBm	553.0	mA
	WCDMA data transfer (GNSS OFF)	WCDMA B1 HSDPA @22.49dBm	798.0	mA
		WCDMA B1 HSUPA @21.87dBm	788.0	mA
		WCDMA B5 HSDPA @22.66dBm	781.0	mA
		WCDMA B5 HSUPA @21.99dBm	770.0	mA
		WCDMA B8 HSDPA @22.23dBm	655.0	mA
		WCDMA B8 HSUPA @21.68dBm	659.0	mA
	LTE data transfer (GNSS OFF)	LTE-FDD B1 @23.12dBm	940.0	mA
		LTE-FDD B3 @22.75dBm	989.0	mA
		LTE-FDD B5 @22.92dBm	962.0	mA
		LTE-FDD B7 @23.42dBm	1188.0	mA
		LTE-FDD B8 @22.97dBm	911.0	mA
		LTE-FDD B20 @22.51dBm	946.0	mA
		LTE-TDD B38 @22.58dBm	686.0	mA
		LTE-TDD B40 @22.31dBm	576.0	mA
		LTE-TDD B41 @22.03dBm	611.0	mA
	GSM voice call	GSM900 PCL=5 @33.31dBm	367.0	mA
		DCS1800 PCL=0 @20.48dBm	248.0	mA
	WCDMA voice call	WCDMA B1 @23.18dBm	868.0	mA
		WCDMA B5 @22.62dBm	808.0	mA
		WCDMA B8 @23.02dBm	728.0	mA

Table 24: Current Consumption of EC25-V Mini PCIe

Parameter	Description	Conditions	Typ.	Unit
I_{VBAT}	Sleep state	**AT+CFUN=0** (USB disconnected)	3.4	mA
		LTE-FDD PF=64 (USB disconnected)	4.8	mA
		LTE-FDD PF=128 (USB disconnected)	4.3	mA
	Idle state	LTE-FDD PF=64 (USB disconnected)	30.0	mA
		LTE-FDD PF=64 (USB connected)	42.0	mA
	LTE data transfer (GNSS OFF)	LTE-FDD B4 @23.3dBm	873.0	mA
		LTE-FDD B13 @22.13dBm	638.0	mA

Table 25: GNSS Current Consumption of EC25 Mini PCIe Series Module

Parameter	Description	Conditions	Typ.	Unit
I_{VBAT} (GNSS)	Searching (**AT+CFUN=0**)	Cold start @Passive Antenna	75.0	mA
		Lost state @Passive Antenna	74.0	mA
	Tracking (**AT+CFUN=0**)	Instrument environment	44.0	mA
		Open Sky @Passive Antenna	53.0	mA
		Open Sky @Active Antenna	58.0	mA

5 Dimensions and Packaging

5.1. General Description

This chapter mainly describes mechanical dimensions as well as packaging specification of EC25 Mini PCIe module.

5.2. Mechanical Dimensions of EC25 Mini PCIe

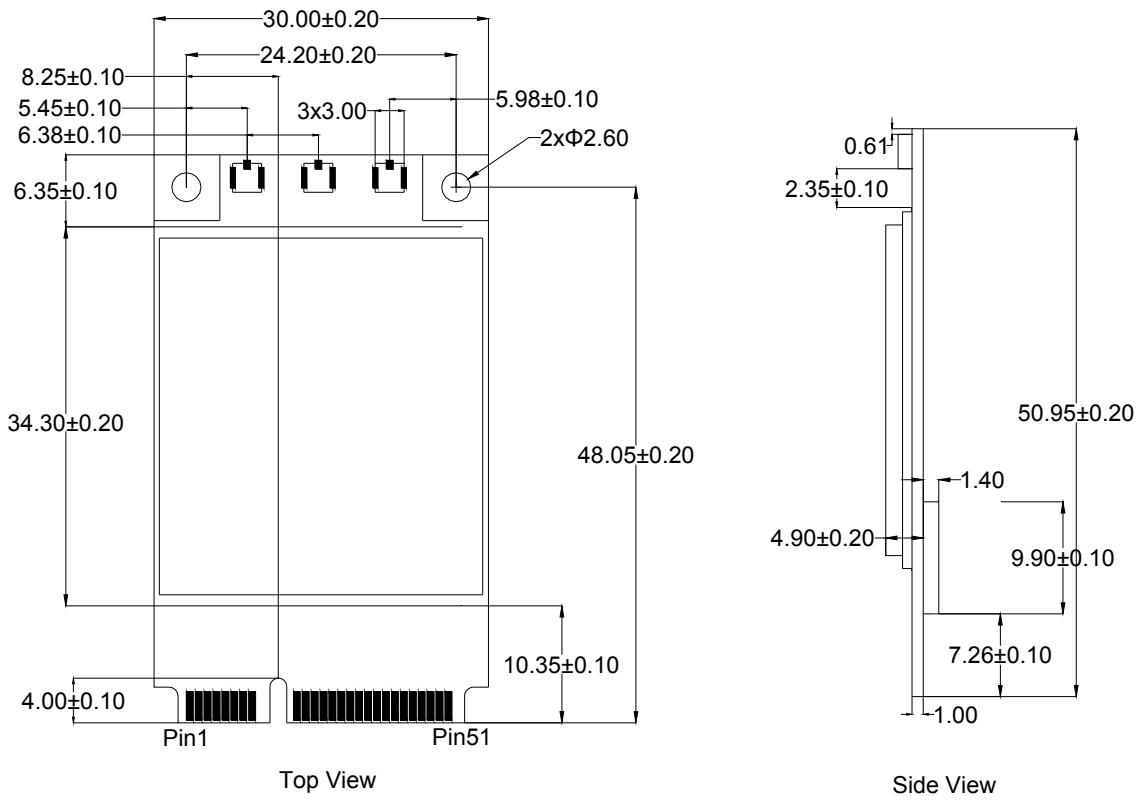

Figure 15: Mechanical Dimensions of EC25 Mini PCIe (Unit: mm)

5.3. Standard Dimensions of Mini PCI Express

The following figure shows the standard dimensions of Mini PCI Express. Please refer to ***document [1]*** for detailed A and B.

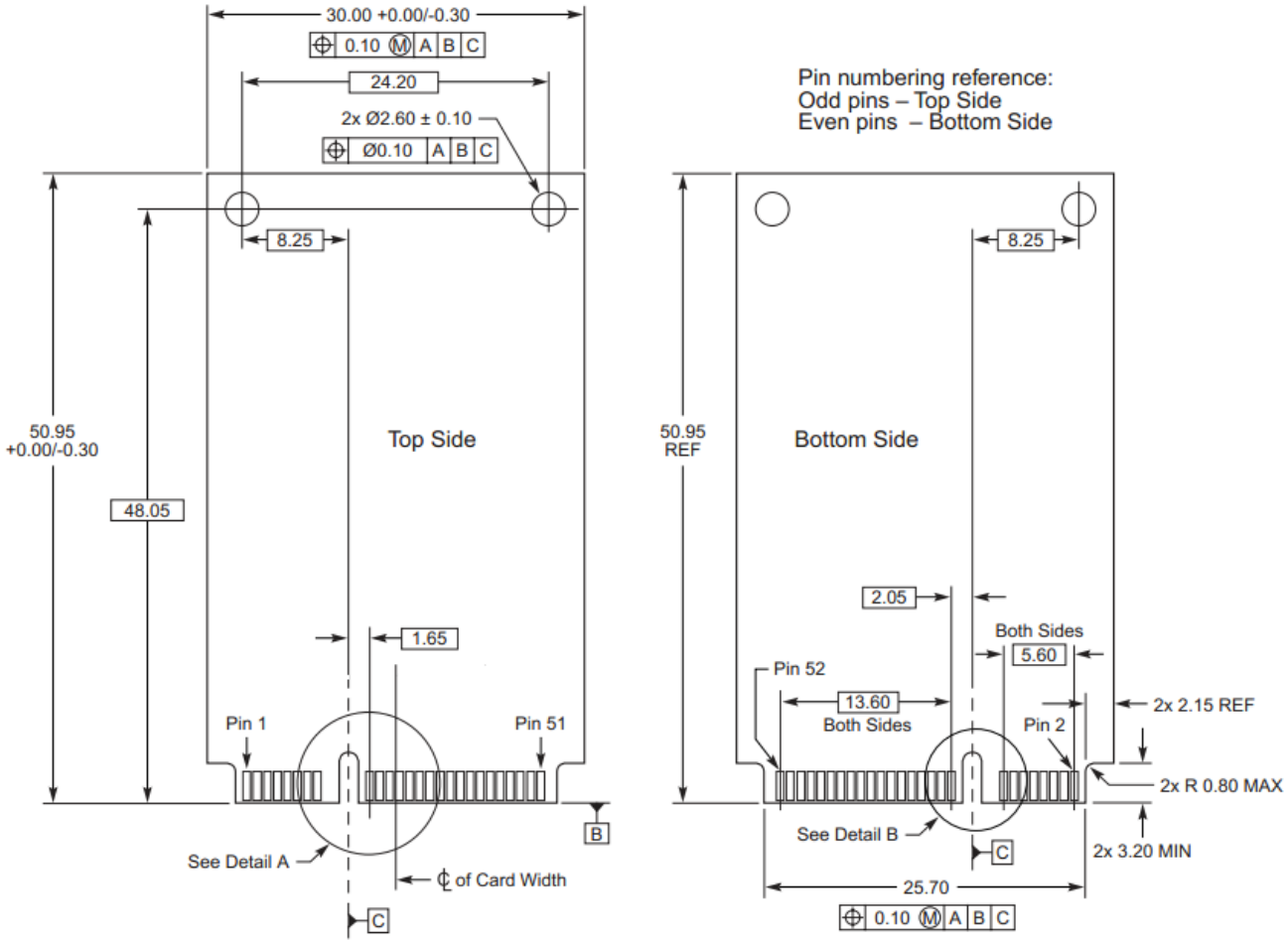

Figure 16: Standard Dimensions of Mini PCI Express (Unit: mm)

EC25 Mini PCIe adopts a standard Mini PCI Express connector which compiles with the directives and standards listed in the ***document [1]***. The following figure takes the Molex 679100002 as an example.

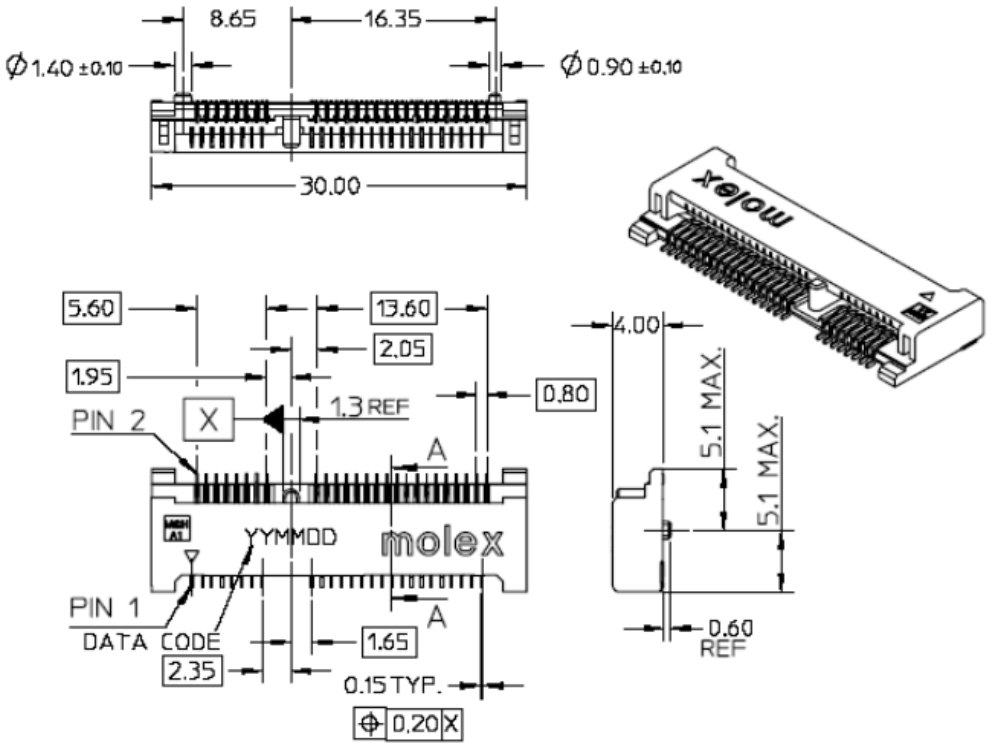

Figure 17: Dimensions of the Mini PCI Express Connector (Molex 679100002, Unit: mm)

5.4. Packaging Specification

The EC25 Mini PCIe is packaged in a tray. Each tray contains 10pcs of modules. The smallest package of EC25 Mini PCIe contains 100pcs.

6 Appendix References

Table 26: Related Documents

SN	Document Name	Remark
[1]	PCI Express Mini Card Electromechanical Specification Revision 1.2	Mini PCI Express Specification
[2]	Quectel_EC25&EC21_AT_Commands_Manual	EC25 and EC21 AT Commands Manual
[3]	Quectel_EC25&EC21_GNSS_AT_Commands_Manual	EC25 and EC21 GNSS AT Commands Manual

Table 27: Terms and Abbreviations

Abbreviation	Description
AMR	Adaptive Multi-rate
bps	Bits Per Second
CS	Coding Scheme
DC-HSPA+	Dual-carrier High Speed Packet Access
DFOTA	Delta Firmware Upgrade Over The Air
DL	Down Link
EFR	Enhanced Full Rate
ESD	Electrostatic Discharge
FDD	Frequency Division Duplexing
FR	Full Rate
GLONASS	GLObalnaya Navigatsionnaya Sputnikovaya Sistema, the Russian Global Navigation Satellite System
GMSK	Gaussian Minimum Shift Keying

GNSS	Global Navigation Satellite System
GPS	Global Positioning System
GSM	Global System for Mobile Communications
HR	Half Rate
kbps	Kilo Bits Per Second
LED	Light Emitting Diode
LTE	Long-Term Evolution
Mbps	Million Bits Per Second
ME	Mobile Equipment (Module)
MIMO	Multiple-Input Multiple-Output
MMS	Multimedia Messaging Service
MO	Mobile Originated
MT	Mobile Terminated
PCM	Pulse Code Modulation
PDU	Protocol Data Unit
PPP	Point-to-Point Protocol
RF	Radio Frequency
Rx	Receive
USIM	Universal Subscriber Identification Module
SIMO	Single Input Multiple Output
SMS	Short Message Service
UART	Universal Asynchronous Receiver & Transmitter
UL	Up Link
URC	Unsolicited Result Code
WCDMA	Wideband Code Division Multiple Access

FCC Certification Requirements.

According to the definition of mobile and fixed device is described in Part 2.1091(b), this device is a mobile device.

And the following conditions must be met:

1. This Modular Approval is limited to OEM installation for mobile and fixed applications only. The antenna installation and operating configurations of this transmitter, including any applicable source-based time-averaging duty factor, antenna gain and cable loss must satisfy MPE categorical Exclusion Requirements of 2.1091.

2. The EUT is a mobile device; maintain at least a 20 cm separation between the EUT and the user's body and must not transmit simultaneously with any other antenna or transmitter.

3.A label with the following statements must be attached to the host end product: This device contains FCC ID: XMR201808EC25AF.

4.To comply with FCC regulations limiting both maximum RF output power and human exposure to RF radiation, maximum antenna gain (including cable loss) must not exceed:

- ❒ WCDMA B2/LTE B2: <8dBi
- ❒ WCDMA B4LTE B4/B66: <5dBi
- ❒ WCDMA B5/LTE B5: <9.416dBi
- ❒ LTE B14: <9.255dBi
- ❒ LTE B13: <9.173dBi
- ❒ LTE B12: <8.734dBi
- ❒ LTE B71: <8.545dBi

5. This module must not transmit simultaneously with any other antenna or transmitter

6. The host end product must include a user manual that clearly defines operating requirements and conditions that must be observed to ensure compliance with current FCC RF exposure guidelines.

For portable devices, in addition to the conditions 3 through 6 described above, a separate approval is required to satisfy the SAR requirements of FCC Part 2.1093

If the device is used for other equipment that separate approval is required for all other operating configurations, including portable configurations with respect to 2.1093 and different antenna configurations.

For this device, OEM integrators must be provided with labeling instructions of finished products. Please refer to KDB784748 D01 v07, section 8. Page 6/7 last two paragraphs:

A certified modular has the option to use a permanently affixed label, or an electronic label. For a permanently affixed label, the module must be labeled with an FCC ID - Section 2.926 (see 2.2 Certification (labeling requirements) above). The OEM manual must provide clear instructions explaining to the OEM the labeling requirements, options and OEM user manual instructions that are required (see next paragraph).

For a host using a certified modular with a standard fixed label, if (1) the module's FCC ID is not visible when installed in the host, or (2) if the host is marketed so that end users do not have straightforward commonly used methods for access to remove the module so that the FCC ID of the module is visible; then an additional permanent label referring to the enclosed module:"Contains Transmitter Module FCC ID: XMR201808EC25AF" or "Contains FCC ID: XMR201808EC25AF" must be used. The host OEM user manual must also contain clear instructions on how end users can find and/or access the module and the FCC ID.

The final host / module combination may also need to be evaluated against the FCC Part 15B criteria for unintentional radiators in order to be properly authorized for operation as a Part 15 digital device.

The user's manual or instruction manual for an intentional or unintentional radiator shall caution the user that changes or modifications not expressly approved by the party responsible for compliance could void the user's authority to operate the equipment. In cases where the manual is provided only in a form other than paper, such as on a computer disk or over the Internet, the information required by this section may be included in the manual in that alternative form, provided the user can reasonably be expected to have the capability to access information in that form.

This device complies with part 15 of the FCC Rules. Operation is subject to the following two conditions:

(1) This device may not cause harmful interference, and (2) this device must accept any interference received, including interference that may cause undesired operation.

Changes or modifications not expressly approved by the manufacturer could void the user's authority to operate the equipment.

To ensure compliance with all non-transmitter functions the host manufacturer is responsible for ensuring compliance with the module(s) installed and fully operational. For example, if a host was previously authorized as an unintentional radiator under the Declaration of Conformity procedure without a transmitter certified module and a module is added, the host manufacturer is responsible for ensuring that the after the module is installed and operational the host continues to be compliant with the Part 15B unintentional radiator requirements.

IC Statement

IRSS-GEN

"This device complies with Industry Canada's licence-exempt RSSs. Operation is subject to the following two conditions: (1) This device may not cause interference; and (2) This device must accept any interference, including interference that may cause undesired operation of the device." or "Le présent appareil est conforme aux CNR d'Industrie Canada applicables aux appareils radio exempts de licence. L'exploitation est autorisée aux deux conditions suivantes :

1) l'appareil ne doit pas produire de brouillage; 2) l'utilisateur de l'appareil doit accepter tout brouillage radioélectrique subi, même si le brouillage est susceptible d'en compromettre le fonctionnement."
Déclaration sur l'exposition aux rayonnements RF
L'autre utilisé pour l'émetteur doit être installé pour fournir une distance de séparation d'au moins 20 cm de toutes les personnes et ne doit pas être colocalisé ou fonctionner conjointement avec une autre antenne ou un autre émetteur.
The host product shall be properly labeled to identify the modules within the host product.
The Innovation, Science and Economic Development Canada certification label of a module shall be clearly visible at all times when installed in the host product; otherwise, the host product must be labeled to display the Innovation, Science and Economic Development Canada certification number for the module, preceded by the word "Contains" or similar wording expressing the same meaning, as follows: "Contains IC: 10224A-2018EC25AF" or "where: 10224A-2018EC25AF is the module's certification number".
Le produit hôte doit être correctement étiqueté pour identifier les modules dans le produit hôte.

L'étiquette de certification d'Innovation, Sciences et Développement économique Canada d'un module doit être clairement visible en tout temps lorsqu'il est installédans le produit hôte; sinon, le produit hôte doit porter une étiquette indiquant le numéro de certification d'Innovation, Sciences et Développement économique Canada pour le module, précédé du mot «Contient» ou d'un libellé semblable exprimant la même signification, comme suit:
"Contient IC: 10224A-2018EC25AF" ou "où: 10224A-2018EC25AF est le numéro de certification du module".