AG35-Quecopen

Hardware Design

LTE Module Series

Rev. AG35-Quecopen_Hardware_Design_V1.3

Date: 2018-12-12

Status: Released

www.quectel.com

Our aim is to provide customers with timely and comprehensive service. For any assistance, please contact our company headquarters:

Quectel Wireless Solutions Co., Ltd.
7th Floor, Hongye Building, No.1801 Hongmei Road, Xuhui District, Shanghai 200233, China
Tel: +86 21 5108 6236
Email: info@quectel.com

Or our local office. For more information, please visit:
http://www.quectel.com/support/sales.htm

For technical support, or to report documentation errors, please visit:
http://www.quectel.com/support/technical.htm
Or email to: support@quectel.com

GENERAL NOTES

QUECTEL OFFERS THE INFORMATION AS A SERVICE TO ITS CUSTOMERS. THE INFORMATION PROVIDED IS BASED UPON CUSTOMERS' REQUIREMENTS. QUECTEL MAKES EVERY EFFORT TO ENSURE THE QUALITY OF THE INFORMATION IT MAKES AVAILABLE. QUECTEL DOES NOT MAKE ANY WARRANTY AS TO THE INFORMATION CONTAINED HEREIN, AND DOES NOT ACCEPT ANY LIABILITY FOR ANY INJURY, LOSS OR DAMAGE OF ANY KIND INCURRED BY USE OF OR RELIANCE UPON THE INFORMATION. ALL INFORMATION SUPPLIED HEREIN IS SUBJECT TO CHANGE WITHOUT PRIOR NOTICE.

COPYRIGHT

THE INFORMATION CONTAINED HERE IS PROPRIETARY TECHNICAL INFORMATION OF QUECTEL WIRELESS SOLUTIONS CO., LTD. TRANSMITTING, REPRODUCTION, DISSEMINATION AND EDITING OF THIS DOCUMENT AS WELL AS UTILIZATION OF THE CONTENT ARE FORBIDDEN WITHOUT PERMISSION. OFFENDERS WILL BE HELD LIABLE FOR PAYMENT OF DAMAGES. ALL RIGHTS ARE RESERVED IN THE EVENT OF A PATENT GRANT OR REGISTRATION OF A UTILITY MODEL OR DESIGN.

Copyright © Quectel Wireless Solutions Co., Ltd. 2018. All rights reserved.

About the Document

History

Revision	Date	Author	Description
1.0	2017-10-19	Eden LIU/ Dominic GONG/ Jun WU	Initial
1.1	2018-03-19	Eden LIU/ Dominic GONG	1. Updated the variants and/or frequency bands of AG35-Quecopen in Table 1. 2. Changed pins 132 and 133 into RESERVED pins (Table 4, Table 8 and Figure 2). 3. Deleted SIM IC in Figure 1. 4. Updated transmitting power and GSM features in Table 2. 5. Updated SD card interface into SDIO interface to support both eMMC and SD card. 6. Added the description of eCall temperature range in Table 2 and Chapter 6.3. 7. Updated GNSS data update rate into 10Hz in Chapter 4.1. 8. Updated the description of PCM interface in primary and auxiliary modes, and the auxiliary mode timing (Figure 23) of PCM interface. 9. Updated antenna gain in Table 42, and added a note for GNSS antenna. 10. Updated current consumption in Chapter 6.4. 11. Updated RF receiving sensitivity in Chapter 6.6. 12. Updated part of the description of thermal consideration (Chapter 6.8).
1.2	2018-08-27	Eden LIU/ Dominic GONG	1. Added variants and updated bands of the module (Table 1). 2. Updated the PAM power supply diagram in the functional diagram (Figure 1).

			3. Enabled SHDN_N, and added the description of the pin in Table 4 and Chapter 3.7.2.3. 4. Changed the name of pin 143 from OTG_PWR_EN to GPIO8 (Table 4). 5. Updated the description of alternate functions of multiplexing pins (Table 5). 6. Enabled the analog audio interface, and added the description of the interface in Table 4 and Chapter 3.12. 7. Enabled UART4 and UART5 interfaces (Chapter 3.11). 8. Added a note for I2C1 interface (Chapter 3.13). 9. Updated the power domain and the reference circuit with PHY application of SGMII interface (Chapter 3.16). 10. Updated the pin definition of wireless connectivity interfaces (Table 26) and the reference circuit for connection with AF20 module (Figure 30). 11. Added ADC sample rate in Table 28. 12. Updated the reference circuit of USB_BOOT interface (Figure 33). 13. Added the description of RTC function (Chapter 3.22). 14. Updated the frequency of Galileo and QZSS (Table 49). 15. Updated current consumption values of the module (Chapter 6.4). 16. Added RF output power of AG35-E (Chapter 6.5). 17. Added RF receiving sensitivity of AG35-E (Chapter 6.6). 18. Updated the reflow soldering thermal profile and related parameters (Chapter 8.2).
1.3	2018-12-12	Eden LIU/ Dominic GONG/ Ethan SHAN	1. Updated supported bands of the module (Table 1). 2. Updated the functional diagram (Figure 1). 3. Updated the pin assignment (Figure 2). 4. Updated the drive current of STATUS pin (Table 4) and its reference circuit design (Figure 34). 5. Updated alternate functions of multiplexing pins (Table 5). 6. Updated the drive circuit of SHDN_N interface (Figure 14). 7. Added a note relating to PCM interface (Chapter 3.13). Added GNSS performance values of

			AG35-NA and AG35-J (Chapter 4.2). 8. Updated the maximum clock frequency of SPI2 interface into 38MHz (Chapter 3.15). 9. Updated current consumption values of the module (Chapter 6.4). 10. Completed the RF output power values of the module (Chapter 6.5). 11. Added the RF receiving sensitivity of AG35-E, AG35-NA and AG35-J (Chapter 6.6).
1.4	2019-02-01	Eden	1. Updated the description of the notes (table 5).

Contents

About the Document **2**
Contents **5**
Table Index **8**
Figure Index **10**

1 Introduction **12**
1.1. Safety Information 13

2 Product Concept **14**
2.1. General Description 14
2.2. Key Features 15
2.3. Functional Diagram 19
2.4. Evaluation Board 20

3 Application Interfaces **21**
3.1. General Description 21
3.2. Pin Assignment 21
3.3. Pin Description 23
3.4. Operating Modes 40
3.5. Power Saving 40
3.5.1. Sleep Mode 40
3.5.1.1. USB Application with USB Remote Wakeup Function 41
3.5.1.2. USB Application without USB Remote Wakeup Function 42
3.5.1.3. USB Application without USB Suspend Function 42
3.5.2. Airplane Mode 43
3.6. Power Supply 44
3.6.1. Power Supply Pins 44
3.6.2. Decrease Voltage Drop 44
3.6.3. Reference Design for Power Supply 45
3.6.4. Monitor the Power Supply 46
3.7. Turn on and off Scenarios 46
3.7.1. Turn on Module Using PWRKEY 46
3.7.2. Turn off Module 48
3.7.2.1. Turn off Module Using the PWRKEY Pin 48
3.7.2.2. Turn off Module Using AT Command or API Interface 49
3.7.2.3. Turn off Module Using SHDN_N 49
3.8. Reset The Module 51
3.9. (U)SIM Interface 52
3.10. USB Interface 55
3.11. UART Interfaces 56
3.12. Audio Interface (Optional) 60
3.13. PCM and I2C Interfaces 61
3.14. SDIO Interfaces 64

3.14.1. SDIO1 Interface 64
3.14.2. SDIO2 Interface 64
3.14.2.1. Reference Design for SD Card Application 65
3.14.2.2. Reference Design for eMMC Application 67
3.15. SPI Interfaces 68
3.16. SGMII Interface (Optional) 70
3.17. Wireless Connectivity Interfaces 72
3.17.1. WLAN Interface 75
3.17.2. BT Interface* 75
3.18. ADC Interfaces 75
3.19. Network Status Indication 76
3.20. STATUS 77
3.21. USB_BOOT Interface 78
3.22. RTC 79

4 GNSS Receiver 80
4.1. General Description 80
4.2. GNSS Performance 80
4.3. Layout Guidelines 83

5 Antenna Interfaces 84
5.1. Main/Rx-diversity Antenna Interface 84
5.1.1. Pin Definition 84
5.1.2. Operating Frequency 84
5.1.3. Reference Design of RF Antenna Interface 88
5.1.4. Reference Design of RF Layout 89
5.2. GNSS Antenna Interface 91
5.3. Antenna Installation 92
5.3.1. Antenna Requirements 92
5.3.2. Recommended RF Connector for Antenna Installation 93

6 Electrical, Reliability and Radio Characteristics 95
6.1. Absolute Maximum Ratings 95
6.2. Power Supply Ratings 96
6.3. Operation and Storage Temperatures 96
6.4. Current Consumption 97
6.5. RF Output Power 111
6.6. RF Receiving Sensitivity 115
6.7. Electrostatic Discharge 119
6.8. Thermal Consideration 119

7 Mechanical Dimensions 122
7.1. Mechanical Dimensions of the Module 122
7.2. Recommended Footprint 124
7.3. Design Effect Drawings of the Module 125

8 Storage, Manufacturing and Packaging 126

8.1. Storage 126
8.2. Manufacturing and Soldering 127
8.3. Packaging 128

9 Appendix A References 130
10 Appendix B GPRS Coding Schemes 134
11 Appendix C GPRS Multi-slot Classes 135
12 Appendix D EDGE Modulation and Coding Schemes 137

Table Index

TABLE 1: FREQUENCY BANDS OF AG35-QUECOPEN MODULES ..... 15#
TABLE 2: KEY FEATURES OF AG35-QUECOPEN MODULES ..... 15#
TABLE 3: I/O PARAMETERS DEFINITION ..... 23#
TABLE 4: PIN DESCRIPTION ..... 24#
TABLE 5: ALTERNATE FUNCTIONS OF MULTIPLEXING PINS ..... 35#
TABLE 6: PULL-UP/PULL-DOWN RESISTANCE OF GPIOS ..... 39#
TABLE 7: OVERVIEW OF OPERATING MODES ..... 40#
TABLE 8: VBAT AND GND PINS ..... 44#
TABLE 9: PWRKEY PIN DESCRIPTION ..... 46#
TABLE 10: PIN DEFINITION OF SHDN_N ..... 50#
TABLE 11: RESET_N PIN DESCRIPTION ..... 51#
TABLE 12: PIN DEFINITION OF (U)SIM INTERFACE ..... 53#
TABLE 13: PIN DESCRIPTION OF USB INTERFACE ..... 55#
TABLE 14: PIN DEFINITION OF UART1 INTERFACE ..... 57#
TABLE 15: PIN DEFINITION OF UART2 INTERFACE ..... 57#
TABLE 16: PIN DEFINITION OF UART3 INTERFACE (MULTIPLEXED FROM SPI) ..... 57#
TABLE 17: PIN DEFINITION OF UART4 INTERFACE (MULTIPLEXED FROM SDIO1) ..... 58#
TABLE 18: PIN DEFINITION OF UART5 INTERFACE (MULTIPLEXED FROM SDIO1) ..... 58#
TABLE 19: PIN DEFINITION OF DEBUG UART INTERFACE ..... 58#
TABLE 20: LOGIC LEVELS OF DIGITAL I/O ..... 59#
TABLE 21: PIN DEFINITION OF ANALOG AUDIO INTERFACE ..... 60#
TABLE 22: PIN DEFINITION OF PCM INTERFACE ..... 63#
TABLE 23: PIN DEFINITION OF I2C INTERFACES ..... 63#
TABLE 24: PIN DEFINITION OF SDIO2 INTERFACE ..... 65#
TABLE 25: PIN DEFINITION OF SPI1 INTERFACE ..... 68#
TABLE 26: PIN DEFINITION OF SPI2 INTERFACE (MULTIPLEXED FROM UART1) ..... 68#
TABLE 27: PIN DEFINITION OF SPI3 INTERFACE (MULTIPLEXED FROM UART2) ..... 68#
TABLE 28: PARAMETERS OF SPI INTERFACE TIMING ..... 69#
TABLE 29: PIN DEFINITION OF SGMII INTERFACE ..... 70#
TABLE 30: PIN DEFINITION OF WIRELESS CONNECTIVITY INTERFACES ..... 72#
TABLE 31: PIN DEFINITION OF ADC INTERFACES ..... 76#
TABLE 32: CHARACTERISTIC OF ADC INTERFACES ..... 76#
TABLE 33: PIN DEFINITION OF THE NETWORK STATUS INDICATOR (NET_STATUS) ..... 77#
TABLE 34: WORKING STATE OF THE NETWORK STATUS INDICATOR (NET_STATUS) ..... 77#
TABLE 35: PIN DEFINITION OF STATUS ..... 78#
TABLE 36: PIN DEFINITION OF USB_BOOT INTERFACE ..... 79#
TABLE 37: AG35-CE GNSS PERFORMANCE ..... 80#
TABLE 38: AG35-E GNSS PERFORMANCE ..... 81#
TABLE 39: AG35-NA GNSS PERFORMANCE ..... 81#
TABLE 40: AG35-LA GNSS PERFORMANCE ..... 82#
TABLE 41: AG35-J GNSS PERFORMANCE ..... 82#

TABLE 42: PIN DEFINITION OF THE RF ANTENNA INTERFACES ..... 84#
TABLE 43: AG35-CE OPERATING FREQUENCIES ..... 84#
TABLE 44: AG35-E OPERATING FREQUENCIES ..... 85#
TABLE 45: AG35-NA OPERATING FREQUENCIES ..... 86#
TABLE 46: AG35-LA OPERATING FREQUENCIES ..... 86#
TABLE 47: AG35-J OPERATING FREQUENCIES ..... 87#
TABLE 48: PIN DEFINITION OF GNSS ANTENNA INTERFACE ..... 91#
TABLE 49: GNSS FREQUENCY ..... 91#
TABLE 50: ANTENNA REQUIREMENTS ..... 92#
TABLE 51: ABSOLUTE MAXIMUM RATINGS ..... 95#
TABLE 52: POWER SUPPLY RATINGS ..... 96#
TABLE 53: OPERATION AND STORAGE TEMPERATURES ..... 96#
TABLE 54: AG35-CE CURRENT CONSUMPTION (25°C, 3.8V POWER SUPPLY) ..... 97#
TABLE 55: AG35-E CURRENT CONSUMPTION ..... 99#
TABLE 56: AG35-NA CURRENT CONSUMPTION ..... 102#
TABLE 57: AG35-LA CURRENT CONSUMPTION ..... 104#
TABLE 58: AG35-J CURRENT CONSUMPTION ..... 108#
TABLE 59: AG35-CE GNSS CURRENT CONSUMPTION ..... 109#
TABLE 60: AG35-E GNSS CURRENT CONSUMPTION ..... 110#
TABLE 61: AG35-NA GNSS CURRENT CONSUMPTION ..... 110#
TABLE 62: AG35-LA GNSS CURRENT CONSUMPTION ..... 110#
TABLE 63: AG35-J GNSS CURRENT CONSUMPTION ..... 111#
TABLE 64: AG35-CE RF OUTPUT POWER ..... 111#
TABLE 65: AG35-E RF OUTPUT POWER ..... 112#
TABLE 66: AG35-NA RF OUTPUT POWER ..... 113#
TABLE 67: AG35-LA RF OUTPUT POWER ..... 113#
TABLE 68: AG35-J RF OUTPUT POWER ..... 114#
TABLE 69: AG35-CE RF RECEIVING SENSITIVITY ..... 115#
TABLE 70: AG35-E RF RECEIVING SENSITIVITY ..... 116#
TABLE 71: AG35-NA RF RECEIVING SENSITIVITY ..... 117#
TABLE 72: AG35-LA RF RECEIVING SENSITIVITY ..... 117#
TABLE 73: AG35-J RF RECEIVING SENSITIVITY ..... 118#
TABLE 74: ELECTROSTATIC DISCHARGE CHARACTERISTICS ..... 119#
TABLE 75: RECOMMENDED THERMAL PROFILE PARAMETERS ..... 127#
TABLE 76: RELATED DOCUMENTS ..... 130#
TABLE 77: TERMS AND ABBREVIATIONS ..... 130#
TABLE 78: DESCRIPTION OF DIFFERENT CODING SCHEMES ..... 134#
TABLE 79: GPRS MULTI-SLOT CLASSES ..... 135#
TABLE 80: EDGE MODULATION AND CODING SCHEMES ..... 137#

Figure Index

FIGURE 1: FUNCTIONAL DIAGRAM ..... 20#
FIGURE 2: PIN ASSIGNMENT (TOP VIEW) ..... 22#
FIGURE 3: SLEEP MODE CURRENT CONSUMPTION DIAGRAM ..... 41#
FIGURE 4: SLEEP MODE APPLICATION WITH USB REMOTE WAKEUP ..... 41#
FIGURE 5: SLEEP MODE APPLICATION WITHOUT USB REMOTE WAKEUP ..... 42#
FIGURE 6: SLEEP MODE APPLICATION WITHOUT SUSPEND FUNCTION ..... 43#
FIGURE 7: POWER SUPPLY LIMITS DURING BURST TRANSMISSION ..... 45#
FIGURE 8: STAR STRUCTURE OF THE POWER SUPPLY ..... 45#
FIGURE 9: REFERENCE CIRCUIT OF POWER SUPPLY ..... 46#
FIGURE 10: TURN ON THE MODULE USING DRIVING CIRCUIT ..... 47#
FIGURE 11: TURN ON THE MODULE USING KEYSTROKE ..... 47#
FIGURE 12: TIMING OF TURNING ON MODULE ..... 48#
FIGURE 13: TIMING OF TURNING OFF MODULE ..... 49#
FIGURE 14: SHUT DOWN THE MODULE USING DRIVING CIRCUIT ..... 50#
FIGURE 15: TIMING OF TURNING OFF MODULE VIA SHDN_N ..... 50#
FIGURE 16: REFERENCE CIRCUIT OF RESET_N BY USING DRIVING CIRCUIT ..... 51#
FIGURE 17: REFERENCE CIRCUIT OF RESET_N BY USING BUTTON ..... 52#
FIGURE 18: TIMING OF RESETTING MODULE ..... 52#
FIGURE 19: REFERENCE CIRCUIT OF (U)SIM INTERFACE WITH AN 8-PIN (U)SIM CARD CONNECTOR ..... 53#
FIGURE 20: REFERENCE CIRCUIT OF (U)SIM INTERFACE WITH A 6-PIN (U)SIM CARD CONNECTOR. 54#
FIGURE 21: REFERENCE CIRCUIT OF USB APPLICATION ..... 55#
FIGURE 22: REFERENCE CIRCUIT WITH TRANSLATOR CHIP ..... 59#
FIGURE 23: REFERENCE CIRCUIT WITH TRANSISTOR CIRCUIT ..... 60#
FIGURE 24: PRIMARY MODE TIMING ..... 62#
FIGURE 25: AUXILIARY MODE TIMING ..... 62#
FIGURE 26: REFERENCE CIRCUIT OF PCM APPLICATION WITH AUDIO CODEC ..... 64#
FIGURE 27: REFERENCE CIRCUIT DESIGN FOR SD CARD APPLICATION ..... 66#
FIGURE 28: REFERENCE CIRCUIT DESIGN FOR EMMC APPLICATION ..... 67#
FIGURE 29: SPI TIMING ..... 69#
FIGURE 30: SIMPLIFIED BLOCK DIAGRAM FOR ETHERNET APPLICATION ..... 71#
FIGURE 31: REFERENCE CIRCUIT OF SGMII INTERFACE WITH PHY APPLICATION ..... 71#
FIGURE 32: REFERENCE CIRCUIT FOR CONNECTION WITH AF20 MODULE ..... 74#
FIGURE 33: REFERENCE CIRCUIT OF THE NETWORK STATUS INDICATOR ..... 77#
FIGURE 34: REFERENCE CIRCUITS OF STATUS ..... 78#
FIGURE 35: REFERENCE CIRCUIT OF USB_BOOT INTERFACE ..... 79#
FIGURE 36: REFERENCE CIRCUIT OF RF ANTENNA INTERFACES ..... 88#
FIGURE 37: MICROSTRIP DESIGN ON A 2-LAYER PCB ..... 89#
FIGURE 38: COPLANAR WAVEGUIDE DESIGN ON A 2-LAYER PCB ..... 89#
FIGURE 39: COPLANAR WAVEGUIDE DESIGN ON A 4-LAYER PCB (LAYER 3 AS REFERENCE GROUND) ..... 90#

FIGURE 40: COPLANAR WAVEGUIDE DESIGN ON A 4-LAYER PCB (LAYER 4 AS REFERENCE GROUND) ..... 90#
FIGURE 41: REFERENCE CIRCUIT OF GNSS ANTENNA ..... 91#
FIGURE 42: DIMENSIONS OF THE U.FL-R-SMT CONNECTOR (UNIT: MM) ..... 93#
FIGURE 43: MECHANICALS OF U.FL-LP CONNECTORS ..... 93#
FIGURE 44: SPACE FACTOR OF MATED CONNECTOR (UNIT: MM) ..... 94#
FIGURE 45: REFERENCED HEATSINK DESIGN (HEATSINK AT THE TOP OF THE MODULE) ..... 120#
FIGURE 46: REFERENCED HEATSINK DESIGN (HEATSINK AT THE BACKSIDE OF CUSTOMERS' PCB) ..... 121#
FIGURE 47: MODULE TOP AND SIDE DIMENSIONS ..... 122#
FIGURE 48: MODULE BOTTOM DIMENSIONS (TOP VIEW) ..... 123#
FIGURE 49: RECOMMENDED FOOTPRINT (TOP VIEW) ..... 124#
FIGURE 50: TOP VIEW OF THE MODULE ..... 125#
FIGURE 51: BOTTOM VIEW OF THE MODULE ..... 125#
FIGURE 52: RECOMMENDED REFLOW SOLDERING THERMAL PROFILE ..... 127#
FIGURE 53: TAPE SPECIFICATIONS ..... 128#
FIGURE 54: REEL SPECIFICATIONS ..... 129#

1 Introduction

This document defines the AG35-Quecopen module and describes its air interface and hardware interface which are connected with customers' applications.

This document can help customers quickly understand module interface specifications, electrical and mechanical details, as well as other related information of the module. Associated with application notes and user guides, customers can use AG35-Quecopen module to design and set up automotive industry mobile applications easily.

1.1. Safety Information

The following safety precautions must be observed during all phases of the operation, such as usage, service or repair of any cellular terminal or mobile incorporating AG35-Quecopen module. Manufacturers of the cellular terminal should send the following safety information to users and operating personnel, and incorporate these guidelines into all manuals supplied with the product. If not so, Quectel assumes no liability for customers' failure to comply with these precautions.

	Full attention must be given to driving at all times in order to reduce the risk of an accident. Using a mobile while driving (even with a handsfree kit) causes distraction and can lead to an accident. Please comply with laws and regulations restricting the use of wireless devices while driving.
	Switch off the cellular terminal or mobile before boarding an aircraft. The operation of wireless appliances in an aircraft is forbidden to prevent interference with communication systems. If the device offers an Airplane Mode, then it should be enabled prior to boarding an aircraft. Please consult the airline staff for more restrictions on the use of wireless devices on boarding the aircraft.
	Wireless devices may cause interference on sensitive medical equipment, so please be aware of the restrictions on the use of wireless devices when in hospitals, clinics or other healthcare facilities.
	Cellular terminals or mobiles operating over radio signals and cellular network cannot be guaranteed to connect in all possible conditions (for example, with unpaid bills or with an invalid (U)SIM card). When emergent help is needed in such conditions, please remember using emergency call. In order to make or receive a call, the cellular terminal or mobile must be switched on in a service area with adequate cellular signal strength.
	The cellular terminal or mobile contains a transmitter and receiver. When it is ON, it receives and transmits radio frequency signals. RF interference can occur if it is used close to TV set, radio, computer or other electric equipment.
	In locations with potentially explosive atmospheres, obey all posted signs to turn off wireless devices such as your phone or other cellular terminals. Areas with potentially explosive atmospheres include fuelling areas, below decks on boats, fuel or chemical transfer or storage facilities, areas where the air contains chemicals or particles such as grain, dust or metal powders, etc.

2 Product Concept

2.1. General Description

Quecopen® is an application solution where the module acts as a main processor. With the development of communication technology and the ever-changing market demands, more and more customers have realized the advantages of Quecopen® solution. Especially, its advantage in reducing the product cost is greatly valued by customers. With Quecopen® solution, development flow for wireless application and hardware design will be simplified. Main features of Quecopen® solution are listed below:

- Simplifies the development of embedded applications, and shortens product development cycle
- Simplifies circuit design, and reduces product cost
- Decreases the size of terminal products
- Reduces power consumption
- Supports remote upgrade of firmware wirelessly
- Improves products' cost-performance ratio, and enhances products' competitiveness

AG35-Quecopen module is a baseband processor platform based on ARM Cortex A7 kernel. The maximum dominant frequency is up to 1.2GHz. Customers can use AG35-Quecopen modules as the basis for development of Quecopen® applications.

AG35-Quecopen is a series of automotive-grade LTE-FDD/LTE-TDD/WCDMA/TD-SCDMA/EVDO/CDMA/GSM wireless communication module with receive diversity, and provides data connectivity on LTE-FDD, LTE-TDD, DC-HSDPA, HSPA+, HSDPA, HSUPA, WCDMA, TD-SCDMA, EVDO, CDMA, EDGE and GPRS networks. It also provides GNSS and voice functionalities to meet customers' specific application demands.

Engineered to meet the demanding requirements in automotive applications and other harsh operating conditions, AG35-Quecopen offers a premium solution for high performance automotive and intelligent transportation system (ITS) applications, such as fleet management, onboard vehicle telematics, in-car entertainment systems, emergency calling, and roadside assistance.

With a compact profile of 33.0mm × 37.5mm × 3.0mm, AG35-Quecopen can meet almost all requirements for automobile application. It is an SMD type module which can be embedded into applications through its 299-pin LGA pads.

Table 1: Frequency Bands of AG35-Quecopen Modules

Network Type	AG35-CE	AG35-E	AG35-NA	AG35-LA*	AG35-J*
LTE-FDD (with Rx-diversity)	B1/B3/ B5/B8	B1/B3/B5/ B7/B8/B20/ B28	B2/B4/B5/ B7/B12/B13/ B17/B28 [1)]	B1/B2/B3/ B4/B5/B7/ B8/B28	B1/B3/B5/B8/ B9/B19/B21/ B28/
LTE-TDD (with Rx-diversity)	B34/B38/ B39/B40/ B41	B38/B40	N/A	N/A	B41
WCDMA (with Rx-diversity)	B1/B8	B1/B5/B8	B2/B4/B5	B1/B2/B3/ B4/B5/B8	B1/B3/B5/ B6/B8/B19
TD-SCDMA	B34/B39	N/A	N/A	N/A	N/A
EVDO/CDMA	BC0 [1)]	N/A	N/A	N/A	N/A
GSM	900/1800MHz	900/1800MHz	850/1900MHz	850/900/ 1800/1900MHz	N/A
GNSS	GPS, GLONASS, BeiDou/ Compass, Galileo, QZSS	GPS, GLONASS, BeiDou/ Compass, Galileo, QZSS	GPS, GLONASS, BeiDou/ Compass, Galileo, QZSS	GPS, GLONASS, BeiDou/ Compass, Galileo, QZSS	GPS, GLONASS, BeiDou/ Compass, Galileo, QZSS

NOTES

1. [1)] EVDO/CDMA BC0 for AG35-CE and LTE-FDD B28 for AG35-NA are optional.
2. "*" means under development.

2.2. Key Features

The following table describes the detailed features of AG35-Quecopen module.

Table 2: Key Features of AG35-Quecopen Modules

Feature	Details
Power Supply	Supply voltage: 3.3V~4.3V Typical supply voltage: 3.8V

Transmitting Power	Class 4 (33dBm±2dB) for GSM850 Class 4 (33dBm±2dB) for EGSM900 Class 1 (30dBm±2dB) for DCS1800 Class 1 (30dBm±2dB) for PCS1900 Class E2 (27dBm±3dB) for GSM850 8-PSK Class E2 (27dBm±3dB) for EGSM900 8-PSK Class E2 (26dBm±3dB) for DCS1800 8-PSK Class E2 (26dBm±3dB) for PCS1900 8-PSK Class 3 (24dBm+2/-1dB) for EVDO/CDMA BC0 Class 3 (24dBm+1/-3dB) for WCDMA bands Class 2 (24dBm+1/-3dB) for TD-SCDMA bands Class 3 (23dBm±2dB) for LTE-FDD bands Class 3 (23dBm±2dB) for LTE-TDD bands
LTE Features	Support up to non-CA Cat 4 LTE FDD and TDD Support 1.4 to 20MHz RF bandwidth Support Multiuser MIMO in DL direction ● FDD: Max 150Mbps (DL)/50Mbps (UL) ● TDD: Max 130Mbps (DL)/30Mbps (UL)
UMTS Features	Support 3GPP R8 DC-HSDPA, HSPA+, HSDPA, HSUPA, WCDMA Support QPSK, 16-QAM and 64-QAM modulation ● DC-HSDPA: Max 42Mbps (DL) ● HSUPA: Max 5.76Mbps (UL) ● WCDMA: Max 384Kbps (DL)/384Kbps (UL)
TD-SCDMA Features	Support CCSA Release 3 TD-SCDMA ● Max 4.2Mbps (DL)/2.2Mbps (UL)
CDMA2000 Features	Support 3GPP2 CDMA2000 1X Advanced, CDMA2000 1x EV-DO Rev.A ● EVDO: Max 3.1Mbps (DL)/1.8Mbps (UL) ● 1X Advanced: Max 307.2Kbps (DL)/307.2Kbps (UL)
GSM Features	**GPRS:** Support GPRS multi-slot class 33 (33 by default) Coding scheme: CS-1, CS-2, CS-3 and CS-4 Max 107Kbps (DL)/85.6Kbps (UL) **EDGE:** Support EDGE multi-slot class 33 (33 by default) Support GMSK and 8-PSK for different MCS (Modulation and Coding Scheme) Downlink coding schemes: CS 1-4 and MCS 1-9 Uplink coding schemes: CS 1-4 and MCS 1-9 Max 296Kbps (DL)/236.8Kbps (UL)
Internet Protocol Features	Support TCP/UDP/PPP/FTP/HTTP/NTP/PING/QMI/HTTPS/SMTP/MMS/FTPS/SMTPS/SSL protocols Support the protocols PAP (Password Authentication Protocol) and CHAP (Challenge Handshake Authentication Protocol) usually used for PPP

	connections
SMS	Text and PDU modes Point to point MO and MT SMS cell broadcast SMS storage: ME by default
(U)SIM Interface	Support USIM/SIM card: 1.8V, 3.0V
Audio Features (Optional)	Built-in audio codec with two microphone inputs and one stereo output or two mono outputs GSM: HR/FR/EFR/AMR/AMR-WB WCDMA: AMR/AMR-WB LTE: AMR/AMR-WB Support echo cancellation and noise suppression
PCM Interface	Used for audio function with external codec Support 16-bit linear data format Support long frame synchronization and short frame synchronization Support master and slave modes, but must be the master in long frame synchronization
USB Interface	Compliant with USB 2.0 specification (support USB HOST) and the data transfer rate can reach up to 480Mbps Used for AT command communication, data transmission, GNSS NMEA output, software debugging and firmware upgrade Support USB serial driver under Windows 7/8/8.1/10, Windows CE 5.0/6.0/7.0*, Linux 2.6/3.x/4.1~4.14, Android 4.x/5.x/6.x/7.x/8.x
UART Interfaces	**UART1:** Baud rate reach up to 921600bps, 115200bps by default Support RTS and CTS hardware flow control **UART2:** Baud rate reach up to 921600bps, 115200bps by default Support RTS and CTS hardware flow control **UART3 (Multiplexed from SPI):** Baud rate reach up to 921600bps, 115200bps by default Support RTS and CTS hardware flow control UART4 (Multiplexed from SDIO1): Baud rate reach up to 921600bps, 115200bps by default Support RTS and CTS hardware flow control UART5 (Multiplexed from SDIO1): Baud rate reach up to 921600bps, 115200bps by default **Debug UART:** Used for Linux console and log output, 115200bps baud rate
SDIO Interfaces	**SDIO1:** Compliant with SD 3.0 protocol Used for WLAN function

	SDIO2: Compliant with SD 3.0 protocol Support eMMC and SD card
SPI Interfaces	Support master mode only Maximum clock frequency rate: 50MHz
I2C Interfaces	**I2C1:** Compliant with I2C specification version 5.0 Multi-master is not supported Used for codec configuration by default **I2C2:** Compliant with I2C specification version 5.0 Multi-master is not supported
SGMII Interface (Optional)	Support 10/100Mbps
Wireless Connectivity Interfaces	Support SDIO1 interface for WLAN and UART & PCM interfaces for Bluetooth*
Rx-diversity	Support LTE/WCDMA Rx-diversity
GNSS Features	Gen8C-Lite of Qualcomm Protocol: NMEA 0183
AT Commands	3GPP TS 27.007/3GPP TS 27.005 AT commands and Quectel enhanced AT commands
Network Indication	NET_STATUS is used to indicate network connectivity status
Antenna Interface	Including main antenna interface (ANT_MAIN), Rx-diversity antenna interface (ANT_DIV) and GNSS antenna interface (ANT_GNSS)
Physical Characteristics	Size: (33.0±0.15)mm × (37.5±0.15)mm × (3.0±0.2)mm Weight: approx. 8.1g
Temperature Range	Operation temperature range: -35°C ~ +75°C [1)] Extended temperature range: -40°C ~ +85°C [2)] eCall temperature range: -40°C ~ +90°C [3)] Storage temperature range: -40°C ~ +95°C
Firmware Upgrade	USB interface DFOTA
RoHS	All hardware components are fully compliant with EU RoHS directive

NOTES

1. [1)] Within operation temperature range, the module is 3GPP compliant, and emergency call can be dialed out with a maximum power and data rate.
2. [2)] Within extended temperature range, the module remains fully functional and retains the ability to establish and maintain a voice, SMS, data transmission, emergency call, etc. There is no unrecoverable malfunction. There are also no effects on radio spectrum and no harm to radio network. Only one or more parameters like P_{out} might reduce in their value and exceed the specified

tolerances. When the temperature returns to normal operation temperature levels, the module will meet 3GPP specifications again.

3. [3] Within eCall temperature range, the emergency call function must be functional until the module is broken. When the ambient temperature is between 75°C and 90°C and the module temperature has reached the threshold value, the module will trigger protective measures (such as reduce power, decrease throughput, unregister the device, etc.) to ensure the full function of emergency call.
4. "*" means under development.

2.3. Functional Diagram

The following figure shows a block diagram of AG35-Quecopen and illustrates the major functional parts.

- Power management
- Baseband
- DDR+NAND flash
- Radio frequency
- Peripheral interfaces

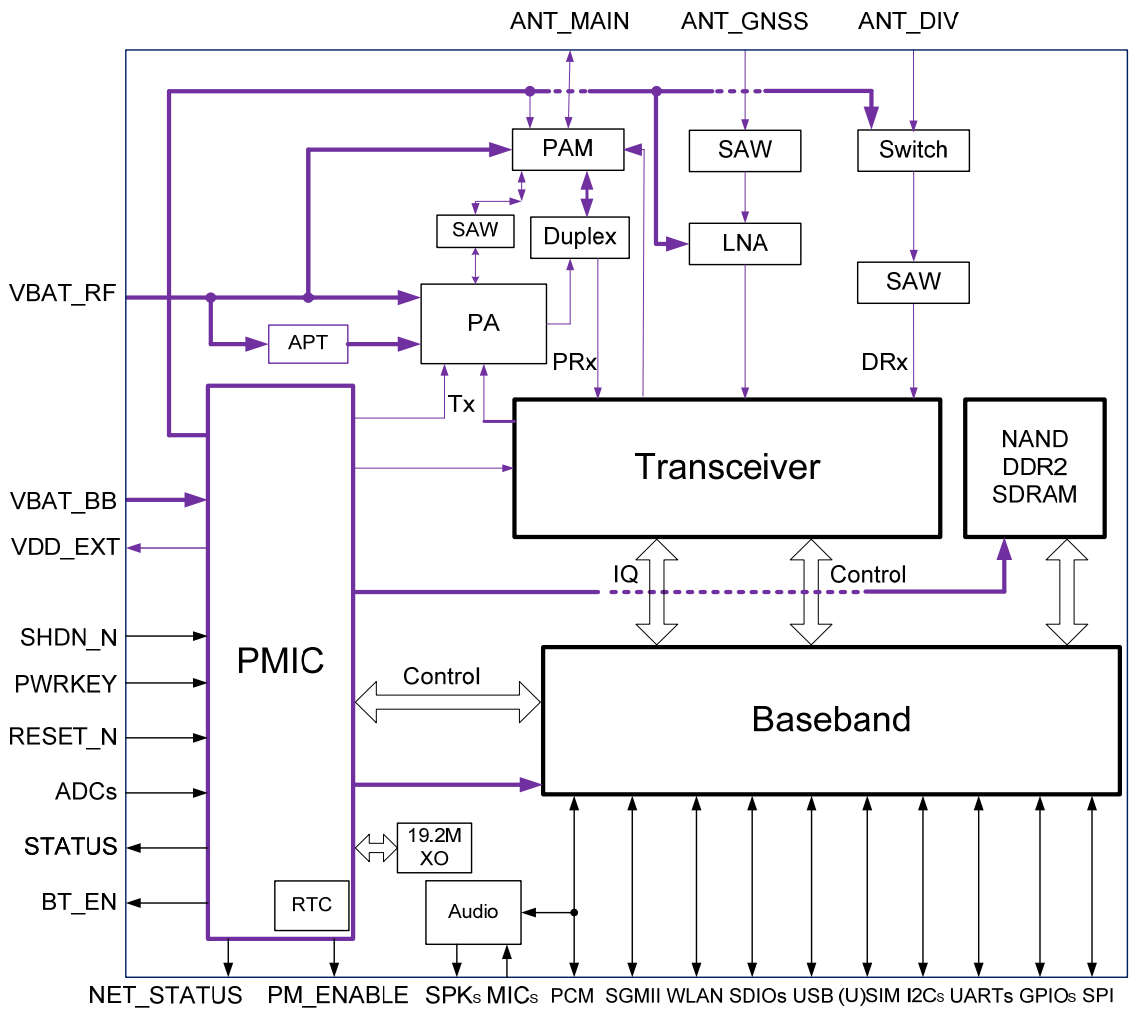

Figure 1: Functional Diagram

2.4. Evaluation Board

In order to help customers develop applications conveniently with AG35-Quecopen module, Quectel supplies the evaluation board (EVB), USB data cable, earphone, antenna and other peripherals to control or test the module. For more details, please refer to ***document [4]***.

3 Application Interfaces

3.1. General Description

AG35-Quecopen is equipped with 299-pin LGA pads that can be connected to cellular application platform. Sub-interfaces included in these pads are described in detail in the following sub-chapters:

- Power supply
- (U)SIM interface
- USB interface
- UART interfaces
- Audio interface (optional)
- PCM and I2C interfaces
- SDIO interfaces
- SPI interfaces
- SGMII interface (optional)
- Wireless connectivity interfaces
- ADC interfaces
- Status indication interfaces
- USB_BOOT interface

3.2. Pin Assignment

The following figure shows the pin assignment of AG35-Quecopen module.

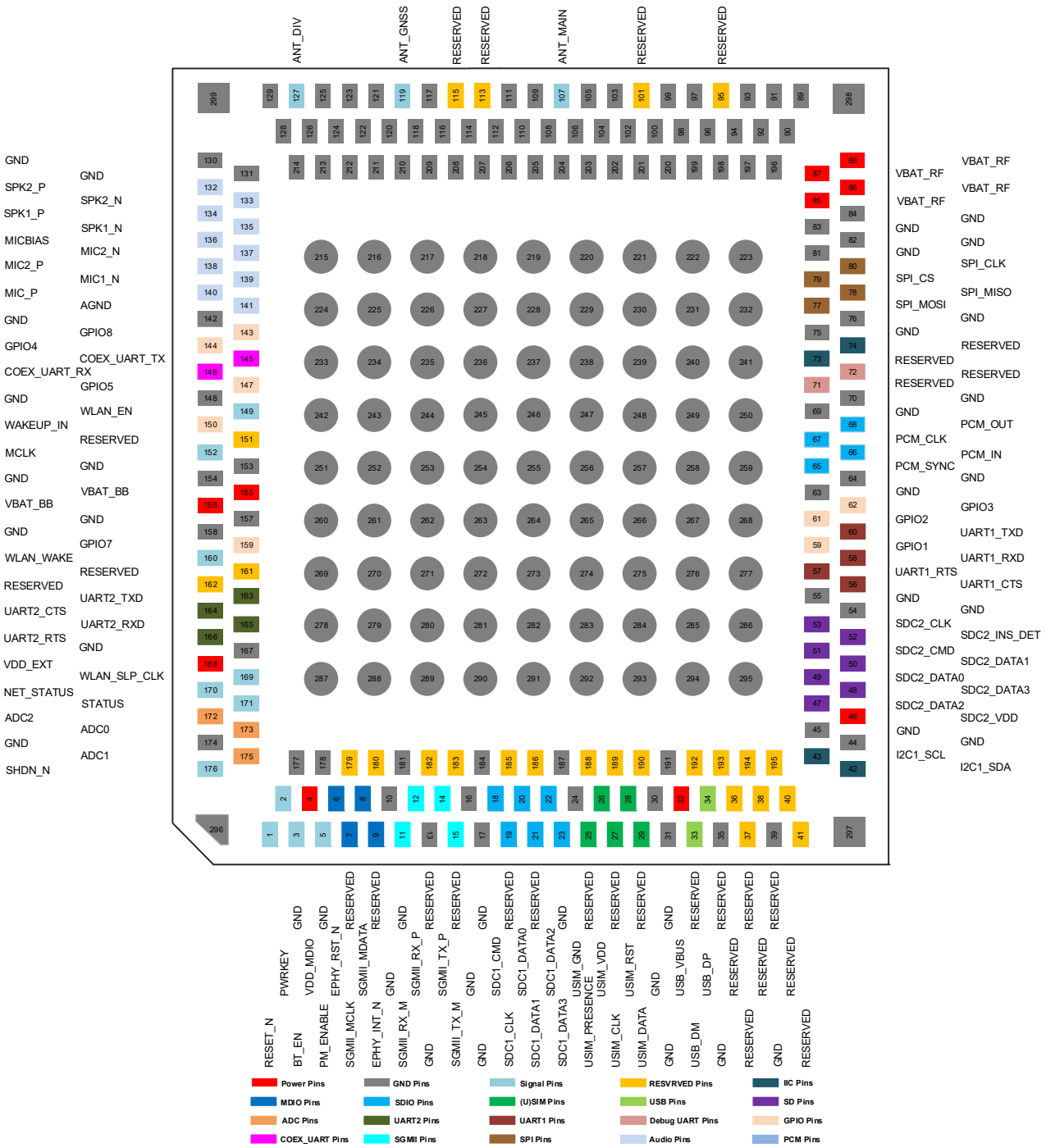

Figure 2: Pin Assignment (Top View)

NOTES

1. Pins 59, 65, 67, 144~147, 149 and 159 cannot be pulled up before power-up. Pin 80 cannot be pulled down before power-up.
2. PWRKEY (pin 2) output voltage is 0.8V because of the diode drop in the Qualcomm chipset.

3. GND pins 215~299 should be connected to ground in the design.
4. Keep all RESERVED pins and unused pins unconnected.

3.3. Pin Description

The following tables show the pin definition of AG35-Quecopen module, as well as the alternate functions of multiplexing pins.

Table 3: I/O Parameters Definition

Type	Description
AI	Analog input
AO	Analog output
B	Bidirectional digital with CMOS input
BH	High-voltage tolerant bidirectional digital with CMOS input
DI	Digital input
DO	Digital output
H	High level
IO	Bidirectional
L	Low level
OC	Open collector
OD	Open drain
PD	Pull down
PI	Power input
PO	Power output
PU	Pull up

Table 4: Pin Description

Power Supply					
Pin Name	**Pin No.**	**I/O**	**Description**	**DC Characteristics**	**Comment**
VBAT_BB	155, 156	PI	Power supply for module's baseband part	Vmax=4.3V Vmin=3.3V Vnorm=3.8V	It must be able to provide sufficient current up to 0.8A.
VBAT_RF	85, 86, 87, 88	PI	Power supply for module's RF part	Vmax=4.3V Vmin=3.3V Vnorm=3.8V	It must be able to provide sufficient current up to 1.8A in a transmitting burst.
VDD_EXT	168	PO	Provide 1.8V for external circuit	Vnorm=1.8V $I_O$max=50mA	Power supply for external GPIO's pull up circuits.
GND	10, 13, 16, 17, 30, 31, 35, 39, 44, 45, 54, 55, 63, 64, 69, 70, 75, 76, 81~84, 89~94, 96~100, 102~106, 108~112, 114, 116~118, 120~126, 128~131, 142, 148, 153, 154, 157, 158, 167, 174, 177, 178, 181, 184, 187, 191, 196~299		Ground		
Turn on/off					
Pin Name	**Pin No.**	**I/O**	**Description**	**DC Characteristics**	**Comment**
PWRKEY	2	DI	Turn on/off the module	V_{IH}max=2.1V V_{IH}min=1.3V	The output voltage is 0.8V because of the

				V_{IL}max=0.5V	diode drop in the Qualcomm chipset.
RESET_N	1	DI	Reset the module	V_{IH}max=2.1V V_{IH}min=1.3V V_{IL}max=0.5V	Internally pulled up to 1.8V. Active low.
SHDN_N	176	DI	Emergency shutdown for the module	V_{IH}max=2.1V V_{IH}min=1.3V V_{IL}max=0.5V	
(U)SIM Interface					
Pin Name	**Pin No.**	**I/O**	**Description**	**DC Characteristics**	**Comment**
USIM_GND	24		Specified ground for (U)SIM card		Connect to ground of (U)SIM card connector.
USIM_ PRESENCE	25	DI	(U)SIM card insertion detection	V_{IL}min=-0.3V V_{IL}max=0.6V V_{IH}min=1.2V V_{IH}max=2.0V	1.8V power domain. If unused, keep it open.
USIM_VDD	26	PO	Power supply for (U)SIM card	**For 1.8V (U)SIM:** Vmax=1.9V Vmin=1.7V **For 3.0V (U)SIM:** Vmax=3.05V Vmin=2.7V $I_O$max=50mA	Either 1.8V or 3.0V is supported by the module automatically.
USIM_CLK	27	DO	Clock signal of (U)SIM card	**For 1.8V (U)SIM:** V_{OL}max=0.45V V_{OH}min=1.35V **For 3.0V (U)SIM:** V_{OL}max=0.45V V_{OH}min=2.55V	
USIM_RST	28	DO	Reset signal of (U)SIM card	**For 1.8V (U)SIM:** V_{OL}max=0.45V V_{OH}min=1.35V **For 3.0V (U)SIM:** V_{OL}max=0.45V V_{OH}min=2.55V	
USIM_DATA	29	IO	Data signal of (U)SIM card	**For 1.8V (U)SIM:** V_{IL}max=0.6V V_{IH}min=1.2V	

				V_{OL}max=0.45V V_{OH}min=1.35V **For 3.0V (U)SIM:** V_{IL}max=1.0V V_{IH}min=1.95V V_{OL}max=0.45V V_{OH}min=2.55V	
USB Interface					
Pin Name	**Pin No.**	**I/O**	**Description**	**DC Characteristics**	**Comment**
USB_VBUS	32	PI	USB connection detection	Vmax=5.25V Vmin=3.0V Vnorm=5.0V	Maximum current: 1mA.
USB_DM	33	IO	USB differential data bus (-)	Compliant with USB 2.0 standard specification.	Require differential impedance of 90Ω.
USB_DP	34	IO	USB differential data bus (+)	Compliant with USB 2.0 standard specification.	
Status Indication					
Pin Name	**Pin No.**	**I/O**	**Description**	**DC Characteristics**	**Comment**
STATUS	171	OD	Indicate the module's operation status	The drive current should be less than 0.15mA.	Require external pull-up. If unused, keep it open.
NET_ STATUS	170	DO	Indicate the module's network activity status	V_{OH}min=1.35V V_{OL}max=0.45V	1.8V power domain. If unused, keep it open.
UART1 Interface					
Pin Name	**Pin No.**	**I/O**	**Description**	**DC Characteristics**	**Comment**
UART1_CTS	56	DO	DTE clear to send	V_{OL}max=0.45V V_{OH}min=1.35V	1.8V power domain. If unused, keep it open.
UART1_RTS	57	DI	DTE request to send	V_{IL}min=-0.3V V_{IL}max=0.6V V_{IH}min=1.2V V_{IH}max=2.0V	1.8V power domain. If unused, keep it open.
UART1_RXD	58	DI	Receive data	V_{IL}min=-0.3V V_{IL}max=0.6V V_{IH}min=1.2V	1.8V power domain. If unused, keep it open.

				V_{IH}max=2.0V	
UART1_TXD	60	DO	Transmit data	V_{OL}max=0.45V V_{OH}min=1.35V	1.8V power domain. If unused, keep it open.
UART2 Interface					
Pin Name	**Pin No.**	**I/O**	**Description**	**DC Characteristics**	**Comment**
UART2_TXD	163	DO	Transmit data	V_{OL}max=0.45V V_{OH}min=1.35V	1.8V power domain. If unused, keep it open.
UART2_CTS	164	DO	DTE clear to send	V_{OL}max=0.45V V_{OH}min=1.35V	1.8V power domain. If unused, keep it open.
UART2_RXD	165	DI	Receive data	V_{IL}min=-0.3V V_{IL}max=0.6V V_{IH}min=1.2V V_{IH}max=2.0V	1.8V power domain. If unused, keep it open.
UART2_RTS	166	DI	DTE request to send	V_{IL}min=-0.3V V_{IL}max=0.6V V_{IH}min=1.2V V_{IH}max=2.0V	1.8V power domain. If unused, keep it open.
Debug UART Interface					
Pin Name	**Pin No.**	**I/O**	**Description**	**DC Characteristics**	**Comment**
DBG_TXD	71	DO	Transmit data	V_{OL}max=0.45V V_{OH}min=1.35V	1.8V power domain. If unused, keep it open.
DBG_RXD	72	DI	Receive data	V_{IL}min=-0.3V V_{IL}max=0.6V V_{IH}min=1.2V V_{IH}max=2.0V	1.8V power domain. If unused, keep it open.
ADC Interfaces					
Pin Name	**Pin No.**	**I/O**	**Description**	**DC Characteristics**	**Comment**
ADC0	173	AI	General purpose analog to digital converter interface	Voltage range: 0.3V to VBAT_BB	If unused, keep it open.
ADC1	175	AI	General purpose analog to digital converter interface	Voltage range: 0.3V to VBAT_BB	If unused, keep it open.

ADC2	172	AI	General purpose analog to digital converter interface	Voltage range: 0.1V to 1.7V	If unused, keep it open.
Audio Interface (Optional)					
Pin Name	**Pin No.**	**I/O**	**Description**	**DC Characteristics**	**Comment**
SPK2_P	132	AO	Earphone analog output 2 (+)		If unused, keep it open.
SPK2_N	133	AO	Earphone analog output 2 (-)		If unused, keep it open.
SPK1_P	134	AO	Earphone analog output 1 (+)		If unused, keep it open.
SPK1_N	135	AO	Earphone analog output 1 (-)		If unused, keep it open.
MICBIAS	136	AO	Bias voltage output for microphone	Vmax=1.55V Vmin=1.5V Vnorm=1.525V	If unused, keep it open.
MIC2_N	137	AI	Microphone analog input 2 (-)		If unused, keep it open.
MIC2_P	138	AI	Microphone analog input 2 (+)		If unused, keep it open.
MIC1_N	139	AI	Microphone analog input 1 (-)		If unused, keep it open.
MIC1_P	140	AI	Microphone analog input 1 (+)		If unused, keep it open.
AGND	141		Analog ground		If unused, keep it open.
PCM Interface					
Pin Name	**Pin No.**	**I/O**	**Description**	**DC Characteristics**	**Comment**
PCM_SYNC	65	IO	PCM data frame synchronization signal	V_{OL}max=0.45V V_{OH}min=1.35V V_{IL}min=-0.3V V_{IL}max=0.6V V_{IH}min=1.2V V_{IH}max=2.0V	1.8V power domain. In master mode, it is an output signal. In slave mode, it is an input signal. If unused, keep it open.
PCM_IN	66	DI	PCM data input	V_{IL}min=-0.3V V_{IL}max=0.6V V_{IH}min=1.2V V_{IH}max=2.0V	1.8V power domain. If unused, keep it open.

PCM_CLK	67	IO	PCM clock	V_{OL}max=0.45V V_{OH}min=1.35V V_{IL}min=-0.3V V_{IL}max=0.6V V_{IH}min=1.2V V_{IH}max=2.0V	1.8V power domain. In master mode, it is an output signal. In slave mode, it is an input signal. If unused, keep it open.
PCM_OUT	68	DO	PCM data output	V_{OL}max=0.45V V_{OH}min=1.35V	1.8V power domain. If unused, keep it open.
MCLK	152	DO	Output 12.288MHz	V_{OL}max=0.45V V_{OH}min=1.35V	1.8V power domain. If unused, keep it open.
I2C1 Interface (for Codec Configuration by Default)					
Pin Name	**Pin No.**	**I/O**	**Description**	**DC Characteristics**	**Comment**
I2C1_SDA	42	IO	I2C1 serial data. Used for external codec.	V_{OL}max=0.45V V_{OH}min=1.35V V_{IL}min=-0.3V V_{IL}max=0.6V V_{IH}min=1.2V V_{IH}max=2.0V	External pull-up resistor is required. 1.8V only. If unused, keep it open.
I2C1_SCL	43	DO	I2C1 serial clock. Used for external codec.	V_{OL}max=0.45V V_{OH}min=1.35V	External pull-up resistor is required. 1.8V only. If unused, keep it open.
I2C2 Interface					
Pin Name	**Pin No.**	**I/O**	**Description**	**DC Characteristics**	**Comment**
I2C2_SDA	73	IO	I2C2 serial data	V_{OL}max=0.45V V_{OH}min=1.35V V_{IL}min=-0.3V V_{IL}max=0.6V V_{IH}min=1.2V V_{IH}max=2.0V	External pull-up resistor is required. 1.8V only. If unused, keep it open.
I2C2_SCL	74	DO	I2C2 serial clock	V_{OL}max=0.45V V_{OH}min=1.35V	External pull-up resistor is required. 1.8V only. If unused, keep it open.
SDIO2 Interface (for eMMC & SD Card)					

Pin Name	Pin No.	I/O	Description	DC Characteristics	Comment
VDD_SDIO	46	PO	**SD card application**: SDIO pull up power source. **eMMC application**: Keep it open when used for eMMC.	$I_O$max=50mA	1.8V/2.85V configurable power output. If unused, keep it open.
SDC2_ DATA2	47	IO	SDIO data signal (bit 2)	**For 1.8V signaling:** V_{OL}max=0.45V V_{OH}min=1.4V V_{IL}min=-0.3V V_{IL}max=0.58V V_{IH}min=1.27V V_{IH}max=2.0V **For 3.0V signaling:** V_{OL}max=0.38V V_{OH}min=2.01V V_{IL}min=-0.3V V_{IL}max=0.76V V_{IH}min=1.72V V_{IH}max=3.34V	SDIO signal level can be selected according to the one supported by SD card. 1.8V power domain for eMMC. Please refer to SD 3.0 protocol for more details. If unused, keep it open.
SDC2_ DATA3	48	IO	SDIO data signal (bit 3)		
SDC2_ DATA0	49	IO	SDIO data signal (bit 0)		
SDC2_ DATA1	50	IO	SDIO data signal (bit 1)		
SDC2_CMD	51	IO	SDIO command signal		
SD_INS_ DET	52	DI/ DO	**DI:** Insertion detection for SD card. **DO:** Reset eMMC	V_{OL}max=0.45V V_{OH}min=1.35V V_{IL}min=-0.3V V_{IL}max=0.6V V_{IH}min=1.2V V_{IH}max=2.0V	1.8V power domain. If unused, keep it open. eMMC resetting is currently not supported.
SDC2_CLK	53	DO	SDIO bus clock	**For 1.8V signaling:** V_{OL}max=0.45V V_{OH}min=1.4V **For 3.0V signaling:** V_{OL}max=0.38V V_{OH}min=2.01V	SDIO signal level can be selected according to the one supported by SD card. 1.8V power domain for eMMC. Please refer to SD 3.0 protocol for more details. If unused, keep it open.
SPI Interface					

Pin Name	Pin No.	I/O	Description	DC Characteristics	Comment
SPI_MOSI	77	DO	SPI master out slave in	V_{OL}max=0.45V V_{OH}min=1.35V	1.8V power domain. If unused, keep it open.
SPI_MISO	78	DI	SPI master in slave out	V_{IL}min=-0.3V V_{IL}max=0.6V V_{IH}min=1.2V V_{IH}max=2.0V	1.8V power domain. If unused, keep it open.
SPI_CS_N	79	DO	SPI chip selection	V_{OL}max=0.45V V_{OH}min=1.35V	1.8V power domain. If unused, keep it open.
SPI_CLK	80	DO	SPI serial clock	V_{OL}max=0.45V V_{OH}min=1.35V	1.8V power domain. If unused, keep it open.
MDIO Interface					
Pin Name	**Pin No.**	**I/O**	**Description**	**DC Characteristics**	**Comment**
VDD_MDIO	4	PO	SGMII_MDATA pull-up power source		1.8V/2.85V configurable power output. If unused, keep it open.
EPHY_RST_N	6	DO	Ethernet PHY reset	**1.8V**: V_{OL}max=0.45V V_{OH}min=1.35V **2.85V**: V_{OL}max=0.35V V_{OH}min=2.14V	1.8V/2.85V power domain. If unused, keep it open.
SGMII_MCLK	7	DO	SGMII MDIO (Management Data Input/Output) clock	**1.8V**: V_{OL}max=0.45V V_{OH}min=1.35V **2.85V**: V_{OL}max=0.35V V_{OH}min=2.14V	1.8V/2.85V power domain. If unused, keep it open.
SGMII_MDATA	8	IO	SGMII MDIO (Management Data Input/Output) data	**1.8V**: V_{IL}max=0.58V V_{IH}min=1.27V V_{OL}max=0.45V V_{OH}min=1.4V **2.85V**: V_{IL}max=1.0V V_{IH}min=1.95V V_{OL}max=0.45V	1.8V/2.85V power domain. External 1.5K resistor pulled up to VDD_MDIO is required. If unused, keep it open.

				V_{OH}min=2.55V	
EPHY_INT_N	9	DI	Ethernet PHY interrupt	V_{IL}min=-0.3V V_{IL}max=0.6V V_{IH}min=1.2V V_{IH}max=2.0V	1.8V power domain. If unused, keep it open.
SGMII Interface					
Pin Name	**Pin No.**	**I/O**	**Description**	**DC Characteristics**	**Comment**
SGMII_RX_M	11	AI	SGMII receiving (-)		If unused, keep it open.
SGMII_RX_P	12	AI	SGMII receiving (+)		If unused, keep it open.
SGMII_TX_P	14	AO	SGMII transmission (+)		If unused, keep it open.
SGMII_TX_M	15	AO	SGMII transmission (-)		If unused, keep it open.
WLAN Interface (SDIO1 and WLAN Control Interfaces)					
Pin Name	**Pin No.**	**I/O**	**Description**	**DC Characteristics**	**Comment**
WLAN_SLP_CLK	169	DO	WLAN sleep clock	V_{OL}max=0.45V V_{OH}min=1.35V	1.8V power domain. If unused, keep it open.
PM_ENABLE	5	DO	External power enable control	V_{OL}max=0.45V V_{OH}min=1.35V	1.8V power domain. If unused, keep it open.
SDC1_CMD	18	IO	WLAN SDIO command signal	V_{OL}max=0.45V V_{OH}min=1.35V	1.8V power domain. If unused, keep it open.
SDC1_CLK	19	DO	WLAN SDIO clock signal	V_{OL}max=0.45V V_{OH}min=1.35V	1.8V power domain. If unused, keep it open.
SDC1_DATA0	20	IO	WLAN SDIO data bus (bit 0)	V_{OL}max=0.45V V_{OH}min=1.35V V_{IL}min=-0.3V V_{IL}max=0.6V V_{IH}min=1.2V V_{IH}max=2.0V	1.8V power domain. If unused, keep it open.
SDC1_DATA1	21	IO	WLAN SDIO data bus (bit 1)	V_{OL}max=0.45V V_{OH}min=1.35V V_{IL}min=-0.3V V_{IL}max=0.6V	1.8V power domain. If unused, keep it open.

				V_{IH}min=1.2V V_{IH}max=2.0V	
SDC1_ DATA2	22	IO	WLAN SDIO data bus (bit 2)	V_{OL}max=0.45V V_{OH}min=1.35V V_{IL}min=-0.3V V_{IL}max=0.6V V_{IH}min=1.2V V_{IH}max=2.0V	1.8V power domain. If unused, keep it open.
SDC1_ DATA3	23	IO	WLAN SDIO data bus (bit 3)	V_{OL}max=0.45V V_{OH}min=1.35V V_{IL}min=-0.3V V_{IL}max=0.6V V_{IH}min=1.2V V_{IH}max=2.0V	1.8V power domain. If unused, keep it open.
WLAN_ WAKE	160	DI	Wake up the module via WLAN	V_{IL}min=-0.3V V_{IL}max=0.6V V_{IH}min=1.2V V_{IH}max=2.0V	1.8V power domain. Active low. If unused, keep it open.
WLAN_EN	149	DO	WLAN function enable control via Wi-Fi module	V_{OL}max=0.45V V_{OH}min=1.35V	1.8V power domain. Active high. If unused, keep it open.
COEX_ UART_RX/U SB_BOOT	146	DI	LTE/WLAN&BT coexistence signal/ Force the module to enter into emergency download mode.	V_{IL}min=-0.3V V_{IL}max=0.6V V_{IH}min=1.2V V_{IH}max=2.0V	1.8V power domain. If unused, keep it open.
COEX_ UART_TX	145	DO	LTE/WLAN&BT coexistence signal	V_{OL}max=0.45V V_{OH}min=1.35V	1.8V power domain. If unused, keep it open.
RF Interface					
Pin Name	**Pin No.**	**I/O**	**Description**	**DC Characteristics**	**Comment**
ANT_MAIN	107	IO	Main antenna interface		50Ω impedance
ANT_GNSS	119	AI	GNSS antenna interface		50Ω impedance. If unused, keep it open.
ANT_DIV	127	AI	Diversity antenna interface		50Ω impedance. If unused, keep it open.

GPIO Pins					
Pin Name	**Pin No.**	**I/O**	**Description**	**DC Characteristics**	**Comment**
GPIO1	59	IO	General purpose input/output interface	V_{IL}min=-0.3V V_{IL}max=0.6V V_{IH}min=1.2V V_{IH}max=2.0V V_{OL}max=0.45V V_{OH}min=1.35V	1.8V power domain. If unused, keep the pins open.
GPIO2	61	IO			
GPIO3	62	IO			
GPIO4	144	IO			
GPIO5	147	IO			
GPIO6	150	IO			
GPIO7	159	IO			
GPIO8	143	IO			
BT Control Interface					
Pin Name	**Pin No.**	**I/O**	**Description**	**DC Characteristics**	**Comment**
BT_EN*	3	DO	Bluetooth enable control		The function is still under development.
RESERVED Pins					
Pin Name	**Pin No.**	**I/O**	**Description**	**DC Characteristics**	**Comment**
RESERVED	36~38, 40, 41, 95, 101, 113, 115, 151, 161, 162, 179, 180, 182, 183, 185, 186, 188~190, 192~195		Reserved		Keep these pins unconnected.

NOTES

1. "*" means under development.
2. Keep all RESERVED pins and unused pins unconnected.

The following table lists the multiplexing pins and their respective alternate functions of AG35-Quecopen.

Table 5: Alternate Functions of Multiplexing Pins

Pin Name	Pin No.	Mode 1 (Default)	Mode 2	Mode 3	Mode 4	Reset [1]	Status in Booting	Wake-up Interrupt [2]	Remark
GPIO1	59	GPIO_38	--	--	--	B-PD,L	Low level	YES	BOOT_CONFIG_12
GPIO2	61	GPIO_75	--	--	--	B-PD,L	Low level	YES	
GPIO3	62	GPIO_74	--	--	--	B-PD,L	Low level	YES	
GPIO4	144	GPIO_25	--	--	--	B-PD,L	Low level	YES	BOOT_CONFIG_2
GPIO5	147	GPIO_24	--	--	--	B-PD,L	Low level	NO	BOOT_CONFIG_1
GPIO6	150	GPIO_42	--	--	--	B-PD,L	Low level	YES	Recommended to be “output”. Please refer to NOTE 2 for details.
GPIO7	159	GPIO_58	--	--	--	B-PD,L	Low level	NO	BOOT_CONFIG_11. Recommended to be “output”. Please refer to NOTE 2 for details.
GPIO8	143	GPIO_41	--	--	--	B-PD,L	Low level	NO	Recommended to be “output”. Please refer to NOTE 2 for details.
BT_EN*	3	BT_EN*	PMU_ GPIO_02	--	--	B-PD,L	Low level	NO	

PM_ENABLE	5	PM_ENABLE	PMU_ GPIO_03	--	--	B-PD,L	Low level	NO
SDC1_CMD	18	SDC1_CMD	GPIO_17	UART_RXD_ BLSP4	--	B-PD,L	Low level	YES
SDC1_CLK	19	SDC1_CLK	GPIO_16	UART_TXD_ BLSP4	--	B-NP,L	Low level	YES
SDC1_DATA0	20	SDC1_DATA0	GPIO_15	UART_CTS_ BLSP1	SPI_CLK_ BLSP1	B-PD,L	Low level	NO
SDC1_DATA1	21	SDC1_DATA1	GPIO_14	UART_RTS_ BLSP1	SPI_CS_N _BLSP1	B-PD,L	Low level	NO
SDC1_DATA2	22	SDC1_DATA2	GPIO_13	UART_RXD_ BLSP1	SPI_MISO _BLSP1	B-PD,L	Low level	YES
SDC1_DATA3	23	SDC1_DATA3	GPIO_12	UART_TXD_ BLSP1	SPI_MOSI _BLSP1	B-PD,L	Low level	YES
USIM_ PRESENCE	25	USIM_ PRESENCE	GPIO_34	--	--	B-PD,L	Low level	YES
I2C1_SDA	42	I2C_SDA_ BLSP4	GPIO_18	--	--	B-PD,L	High level	NO
I2C1_SCL	43	I2C_SCL_ BLSP4	GPIO_19	--	--	B-PD,L	High level	NO
SDC2_INT_ DET	52	SDC2_INT_ DET	GPIO_26	--	--	B-PD,L	Low level	YES
UART1_CTS	56	UART_CTS_ BLSP3	GPIO_3	SPI_CLK_BL SP3	--	B-PD,L	Low level	YES
UART1_RTS	57	UART_RTS_ BLSP3	GPIO_2	SPI_CS_N_B LSP3	--	B-PD,L	Low level	NO

UART1_RXD	58	UART_RXD_BLSP3	GPIO_1	SPI_MISO_BLSP3	--	B-PD,L	Low level	YES	
UART1_TXD	60	UART_TXD_BLSP3	GPIO_0	SPI_MOSI_BLSP3	--	B-PD,L	Low level	NO	
PCM_SYNC	65	PCM_SYNC	GPIO_79	--	--	B-PD,L	Low level	YES	BOOT_CONFIG_7
PCM_IN	66	PCM_IN	GPIO_76	--	--	B-PD,L	Low level	YES	
PCM_CLK	67	PCM_CLK	GPIO_78	--	--	B-PD,L	Low level	NO	BOOT_CONFIG_8
PCM_OUT	68	PCM_OUT	GPIO_77	--	--	B-PD,L	Low level	NO	
I2C2_SDA	73	I2C_SDA_BLSP2	GPIO_6	--	--	B-PD,L	High pulse	NO	Recommended to be “input”. Please refer to NOTE 3 for details.
I2C2_SCL	74	I2C_SCL_BLSP2	GPIO_7	--	--	B-PD,L	Low level	NO	
SPI_MOSI	77	SPI_MOSI_BLSP6	GPIO_20	UART_TXD_BLSP6	PCM_1A_SYNC	B-PD,L	Low level	YES	
SPI_MISO	78	SPI_MISO_BLSP6	GPIO_21	UART_RXD_BLSP6	PCM_1A_IN	B-PD,L	Low level	YES	
SPI_CS_N	79	SPI_CS_N_BLSP6	GPIO_22	UART_RTS_BLSP6	PCM_1A_OUT	B-PD,L	Low level	YES	
SPI_CLK	80	SPI_CLK_BLSP6	GPIO_23	UART_CTS_BLSP6	PCM_1A_CLK	B-PU,H	High level	NO	BOOT_CONFIG_4
WLAN_EN	149	WLAN_EN	GPIO_54	--	--	B-PD,L	Low level	NO	BOOT_CONFIG_6
UART2_TXD	163	UART_TXD_BLSP5	GPIO_8	SPI_MOSI_BLSP5	--	B-PD,L	Low level	YES	

UART2_CTS	164	UART_CTS_BLSP5	GPIO_11	SPI_CLK_BLSP5	--	B-PU,L	High level	YES
UART2_RXD	165	UART_RXD_BLSP5	GPIO_9	SPI_MISO_BLSP5	--	B-PD,L	Low level	YES
UART2_RTS	166	UART_RTS_BLSP5	GPIO_10	SPI_CS_N_BLSP5	--	B-PD,L	Low level	NO
WLAN_SLP_CLK	169	WLAN_SLP_CLK	PMU_GPIO_06	--	--	B-PD,L	Low level	NO
NET_STATUS	170	PMU_GPIO_01	NET_STATUS	--	--	B-PD,L	Low level	NO

NOTES

1. The pin functions in Mode 2/3/4 take effect only after software configuration.
2. Pins 150, 159 and 143 are recommended to be “output” when they are used as GPIOs. When they are used as “input”, they should be configured as NP (no pull-up or pull-down internally) and add pull-up/pull-down circuits externally.
3. The module will generate a high pulse on pin 73 during power-up. Therefore, when pin 73 is used as GPIO, it is recommended to use it as “input”.
4. [1)] Please refer to ***Table 3*** for more details about the symbol description.
5. [2)] If the GPIOs of no interrupt function configured as interrupter function, it will increase consumption of the module. (“YES” means “interrupt function supported”. “NO” means “interrupt function not supported”.)
6. Pins 59, 65, 67, 144~147, 149 and 159 cannot be pulled up before power-up. Pin 80 cannot be pulled down before power-up.
7. “*” means under development.

The following table lists the pull-up and pull-down resistance values of AG35-Quecopen GPIOs.

Table 6: Pull-up/Pull-down Resistance of GPIOs

Symbol	Description	Pin number	Min	Typ.	Max	Unit
R_{PU}	Pull-up resistance	18~23, 25, 42, 43, 52, 56~62, 65~68, 73, 74, 77~80, 144, 147, 149, 163~166	55	100	390	kohm
		143, 150, 159	5	7	50	kohm
R_{PD}	Pull-down resistance	18~23, 25, 42, 43, 52, 56~62, 65~68, 73, 74, 77~80, 144, 147, 149, 163~166	55	100	390	kohm
		143, 150, 159	5	7	50	kohm

3.4. Operating Modes

The table below briefly summarizes the various operating modes referred in the following chapters.

Table 7: Overview of Operating Modes

Mode	Details	
Normal Operation	Idle	Software is active. The module has registered on the network, and it is ready to send and receive data.
	Talk/Data	Network connection is ongoing. In this mode, the power consumption is decided by network setting and data transfer rate.
Minimum Functionality Mode	**AT+CFUN=0** can set the module into a minimum functionality mode without removing the power supply. In this case, both RF function and (U)SIM card will be invalid.	
Airplane Mode	**AT+CFUN=4** can set the module into airplane mode. In this case, RF function will be invalid.	
Sleep Mode	In this mode, the current consumption of the module will be reduced to the minimal level. During this mode, the module can still receive paging message, SMS, voice call and TCP/UDP data from the network normally.	
Power down Mode	In this mode, the power management unit shuts down the power supply. Software is not active. The serial interfaces are not accessible. Operating voltage (connected to VBAT_RF and VBAT_BB) remains applied.	

3.5. Power Saving

3.5.1. Sleep Mode

AG35-Quecopen is able to reduce its current consumption to a minimum value during the sleep mode. This chapter mainly introduces some ways to enter into or exit from sleep mode. The diagram below illustrates the current consumption of AG35-Quecopen during sleep mode.

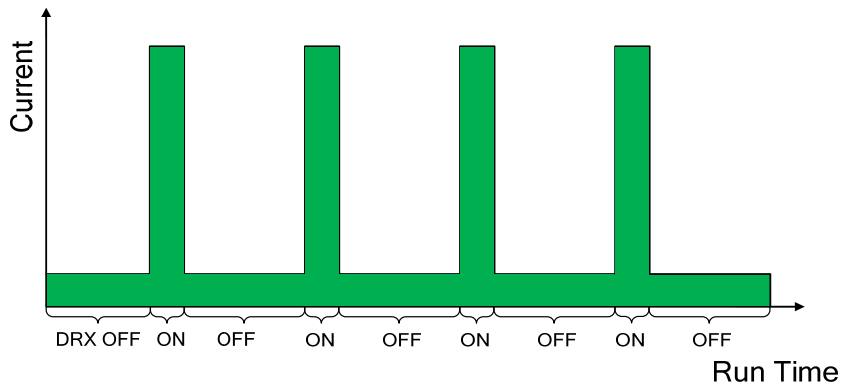

Figure 3: Sleep Mode Current Consumption Diagram

NOTE

DRX cycle index values are broadcasted by the wireless network.

3.5.1.1. USB Application with USB Remote Wakeup Function

If the host supports USB suspend/resume and remote wakeup function, the following three preconditions must be met to let the module enter into the sleep mode.

- Use sleep & wakeup API to enable the sleep mode.
- Ensure the level of pins that configured as wake-up interrupt in ***Table 5*** are under non-wakeup status.
- The host's USB bus, which is connected with the module's USB interface, enters into suspended state.

The following figure shows the connection between the module and the host.

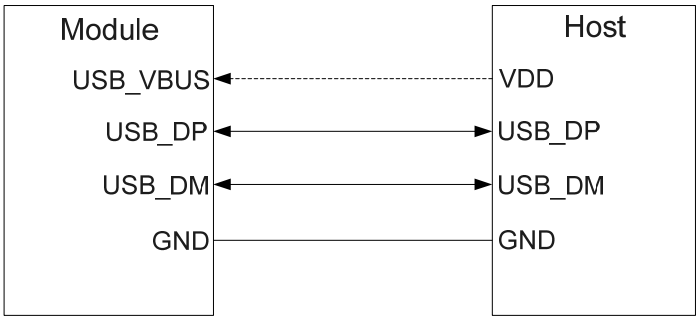

Figure 4: Sleep Mode Application with USB Remote Wakeup

- Sending data to AG35-Quecopen through USB will wake up the module.
- When AG35-Quecopen has URC to report, the module will send remote wake-up signals via USB bus so as to wake up the host.

3.5.1.2. USB Application without USB Remote Wakeup Function

If the host supports USB suspend/resume, but does not support remote wake-up function, it needs to be woken up via the module's GPIO.

There are three preconditions to let the module enter into the sleep mode.

- Use sleep & wakeup API to enable the sleep mode.
- Ensure the level of pins that configured as wake-up interrupt in ***Table 5*** are under non-wakeup status.
- The host's USB bus, which is connected with the module's USB interface, enters into suspended state.

The following figure shows the connection between the module and the host.

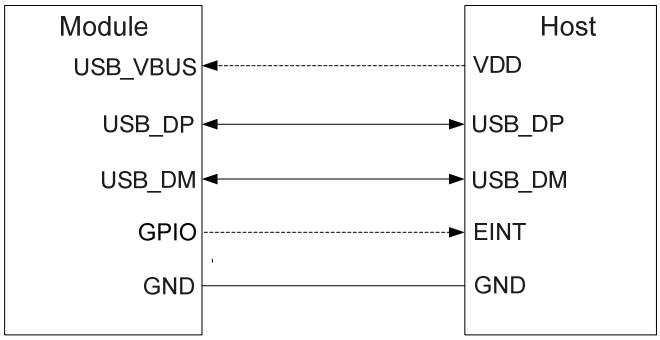

Figure 5: Sleep Mode Application without USB Remote Wakeup

- Sending data to AG35-Quecopen through USB will wake up the module.
- When AG35-Quecopen has URC to report, the module's GPIO signal can be used to wake up the host.

3.5.1.3. USB Application without USB Suspend Function

If the host does not support USB suspend function, USB_VBUS should be connected with an external control circuit to let the module enter into sleep mode.

- Use sleep & wakeup API to enable the sleep mode.
- Ensure the level of pins that configured as wake-up interrupt in ***Table 5*** are under non-wakeup

status.

- Disconnect USB_VBUS.

The following figure shows the connection between the module and the host.

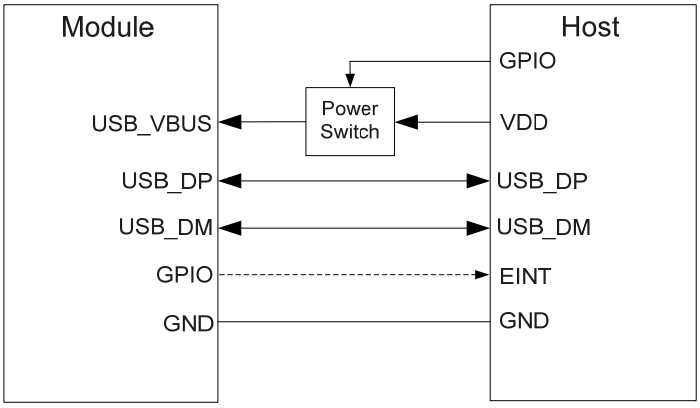

Figure 6: Sleep Mode Application without Suspend Function

Switching on the power switch to supply power to USB_VBUS will wake up the module.

NOTE

Please pay attention to the level match shown in dotted line between the module and the host. Refer to ***document [1]*** for more details about the module's power management application.

3.5.2. Airplane Mode

When the module enters into airplane mode, the RF function does not work, and all AT commands correlative with RF function will be inaccessible. The mode can be set via **AT+CFUN=<fun>** command. The parameter **<fun>** indicates the module's functionality levels, as shown below.

- **AT+CFUN=0:** Minimum functionality mode. Both (U)SIM and RF functions are disabled.
- **AT+CFUN=1:** Full functionality mode (by default).
- **AT+CFUN=4:** Airplane mode. RF function is disabled.

NOTE

The execution of **AT+CFUN** command will not affect GNSS function.

3.6. Power Supply

3.6.1. Power Supply Pins

AG35-Quecopen provides six VBAT pins for connection with an external power supply. There are two separate voltage domains for VBAT.

- Four VBAT_RF pins for module's RF part
- Two VBAT_BB pins for module's baseband part

The following table shows the details of VBAT pins and ground pins.

Table 8: VBAT and GND Pins

Pin Name	Pin No.	Description	Min.	Typ.	Max.	Unit
VBAT_RF	85, 86, 87, 88	Power supply for module's RF part	3.3	3.8	4.3	V
VBAT_BB	155, 156	Power supply for module's baseband part	3.3	3.8	4.3	V
GND	10, 13, 16, 17, 30, 31, 35, 39, 44, 45, 54, 55, 63, 64, 69, 70, 75, 76, 81~84, 89~94, 96~100, 102~106, 108~112, 114, 116~118, 120~126, 128~131, 142, 148, 153, 154, 157, 158, 167, 174, 177, 178, 181, 184, 187, 191, 196~299	Ground		0		V

3.6.2. Decrease Voltage Drop

The power supply range of the module is from 3.3V to 4.3V. Please make sure that the input voltage will never drop below 3.3V. The following figure shows the voltage drop during burst transmission in 2G network. The voltage drop will be less in 3G and 4G networks.

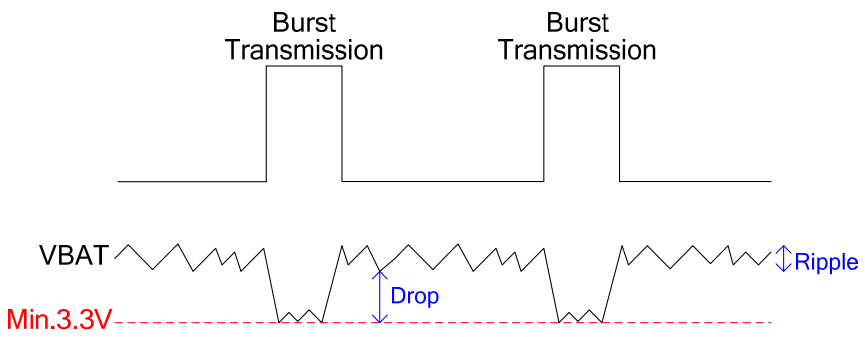

Figure 7: Power Supply Limits during Burst Transmission

To decrease voltage drop, a bypass capacitor of about 100μF with low ESR should be used, and a multi-layer ceramic chip capacitor (MLCC) array should also be reserved due to its low ESR. It is recommended to use three ceramic capacitors (100nF, 33pF, 10pF) for composing the MLCC array, and place these capacitors close to VBAT pins. The main power supply from an external application has to be a single voltage source and can be expanded to two sub paths with star structure. The width of VBAT_BB trace should be no less than 1mm, and the width of VBAT_RF trace should be no less than 2mm. In principle, the longer the VBAT trace is, the wider it will be.

In addition, in order to get a stable power source, it is suggested to use a power TVS (e.g. WS4.5DPF-B, V_{RWM}=4.5V, Ppp=450W) and a zener diode with dissipation power more than 0.5W, and place them as close to the VBAT pins as possible. The following figure shows the star structure of the power supply.

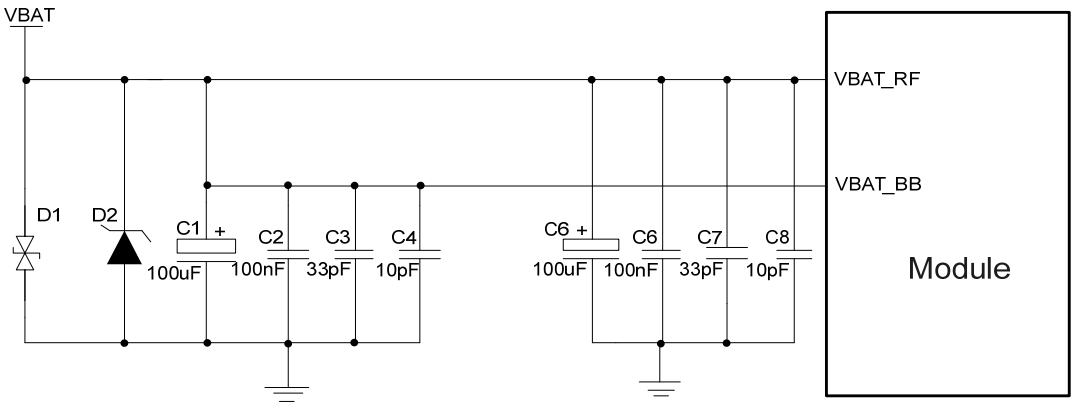

Figure 8: Star Structure of the Power Supply

3.6.3. Reference Design for Power Supply

Power design for the module is very important, as the performance of the module largely depends on the power source. The power supply for AG35-Quecopen should be able to provide sufficient current up to 2A at least. If the voltage drop between the input and output is not too high, it is also to use an LDO to supply power for the module. If there is a big voltage difference between the input source and the desired output

(VBAT), a buck converter is preferred to be used as the power supply.

The following figure shows a reference design for +12V/+24V input power source. The designed output for the power supply is about 3.8V and the maximum rated current is 5A.

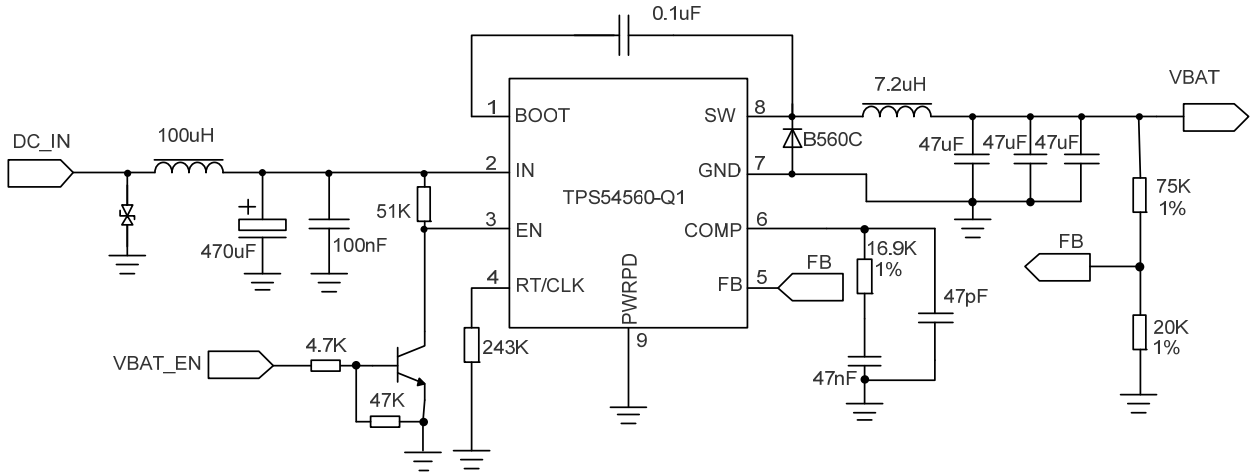

Figure 9: Reference Circuit of Power Supply

3.6.4. Monitor the Power Supply

AT+CBC command can be used to monitor the VBAT_BB voltage value. Please refer to ***document [2]*** for more details.

3.7. Turn on and off Scenarios

3.7.1. Turn on Module Using PWRKEY

The following table shows the pin definition of PWRKEY.

Table 9: PWRKEY Pin Description

Pin Name	Pin No.	Description	DC Characteristics	Comment
PWRKEY	2	Turn on/off the module	V_{IH}max=2.1V V_{IH}min=1.3V V_{IL}max=0.5V	The output voltage is 0.8V because of the diode drop in the Qualcomm chipset.

When AG35-Quecopen is in power down mode, it can be turned on by driving the PWRKEY pin to a low level for at least 500ms. It is recommended to use an open drain/collector driver to control the PWRKEY.

After STATUS pin (require external pull-up) outputting a low level, PWRKEY pin can be released. A simple reference circuit is illustrated in the following figure.

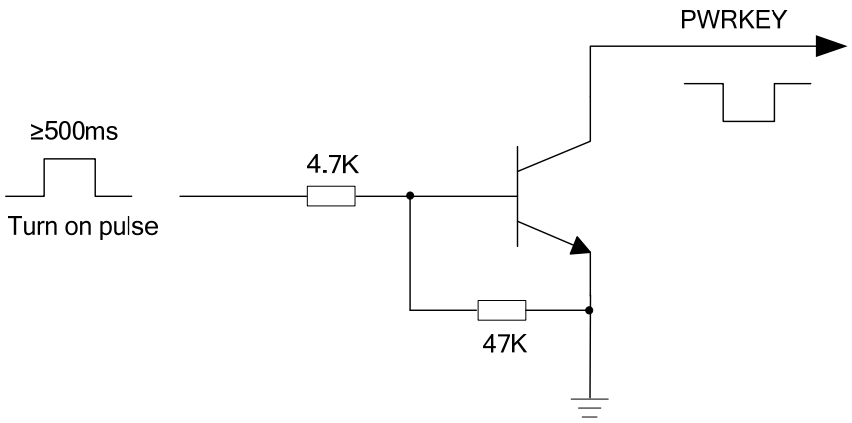

Figure 10: Turn on the Module Using Driving Circuit

Another way to control the PWRKEY is using a button directly. When pressing the key, electrostatic strike may generate from the finger. Therefore, a TVS component is indispensable to be placed nearby the button for ESD protection. A reference circuit is shown in the following figure.

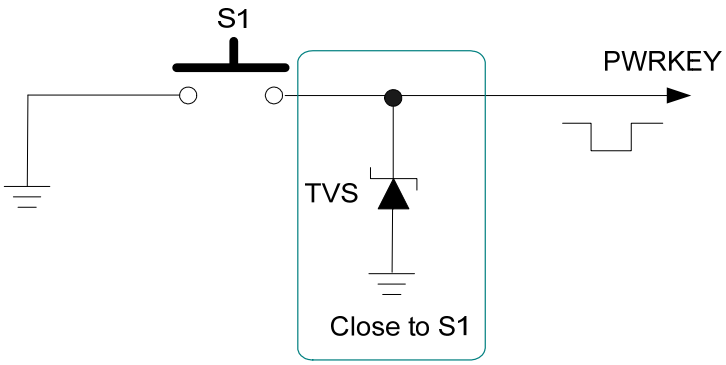

Figure 11: Turn on the Module Using Keystroke

The turn on scenario is illustrated in the following figure.

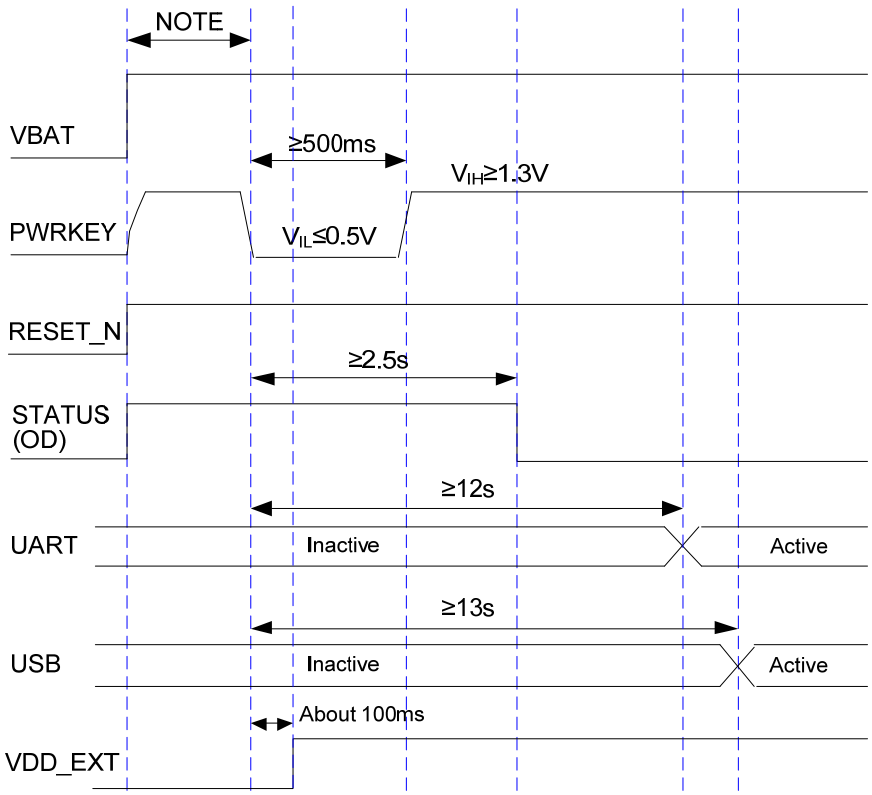

Figure 12: Timing of Turning on Module

NOTES

1. Please make sure that VBAT is stable before pulling down PWRKEY pin. The time between them is no less than 30ms.
2. It is recommended to use an external OD/OC circuit to control the PWRKEY pin.

3.7.2. Turn off Module

Either of the following methods can be used to turn off the module:

- Normal power down procedure: Turn off the module using the PWRKEY pin.
- Normal power down procedure: Turn off the module using AT command or API interface.

3.7.2.1. Turn off Module Using the PWRKEY Pin

Driving the PWRKEY pin to a low level voltage for at least 650ms, the module will execute power-down procedure after PWRKEY is released. The power-down scenario is illustrated in the following figure.

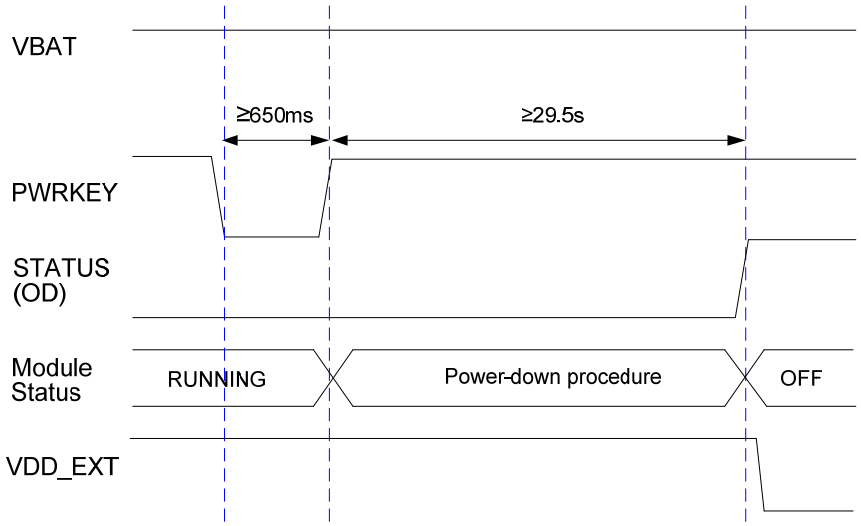

Figure 13: Timing of Turning off Module

3.7.2.2. Turn off Module Using AT Command or API Interface

It is also a safe way to use **AT+QPOWD** command or API interface to turn off the module, which is similar to turning off the module via PWRKEY Pin.

Please refer to ***document [2]*** and ***[3]*** for details about the AT command and API function, respectively.

NOTES

1. In order to avoid damaging the internal flash, please do not switch off the power supply when the module works normally. Only after the module is shut down by PWRKEY or AT command or API interface, the power supply can be cut off.
2. When turn off module with AT command or API, please keep PWRKEY at high level after the execution of power off command. Otherwise the module will be turned on again after successfully turn-off.

3.7.2.3. Turn off Module Using SHDN_N

The following table shows the pin definition of SHDN_N.

Table 10: Pin Definition of SHDN_N

Pin Name	Pin No.	Description	DC Characteristics	Comment
SHDN_N	176	Emergency shutdown for the module	V_{IH}max=2.1V V_{IH}min=1.3V V_{IL}max=0.5V	

Driving the SHDN_N pin to a low level voltage and then releasing it will make the module shut down unconditionally. The shut-down scenario is illustrated in the following figure.

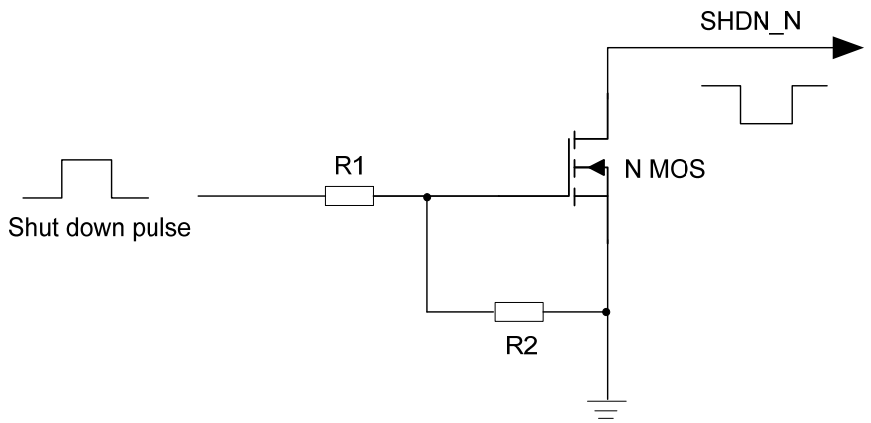

Figure 14: Shut Down the Module Using Driving Circuit

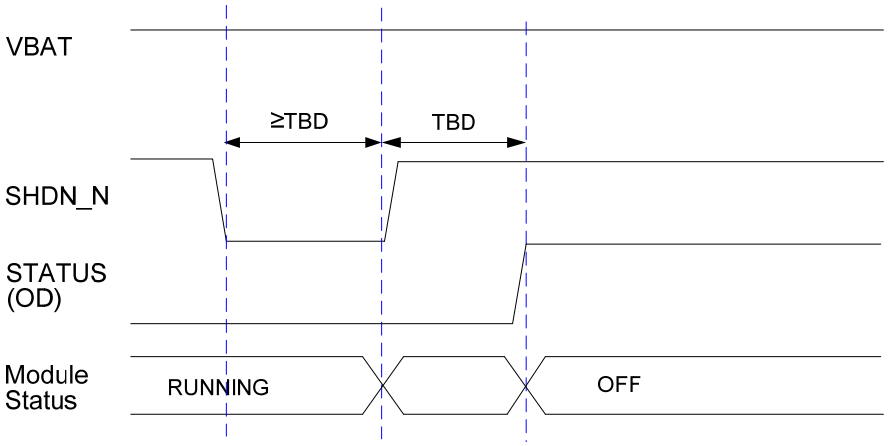

Figure 15: Timing of Turning off Module via SHDN_N

NOTES

1. Pulling down SHDN_N for module shutdown is an emergency option when there are failures in turning off the module by PWRKEY or AT command or API interface. And it is recommended to use

an external OD circuit to control the SHDN_N pin.
2. Never pull up SHDN_N pin.

3.8. Reset the Module

The RESET_N can be used to reset the module. The module can be reset by driving the RESET_N to a low level voltage for 150~460ms. As the RESET_N pin is sensitive to interference, the routing trace on the interface board of the module is recommended to be as short as possible and totally ground shielded.

Table 11: RESET_N Pin Description

Pin Name	Pin No.	Description	DC Characteristics	Comment
RESET_N	1	Reset the module	V_{IH}max=2.1V V_{IH}min=1.3V V_{IL}max=0.5V	Pull-up to 1.8V internally. Active low.

The recommended circuit is similar to the PWRKEY control circuit. An open drain/collector driver or button can be used to control the RESET_N.

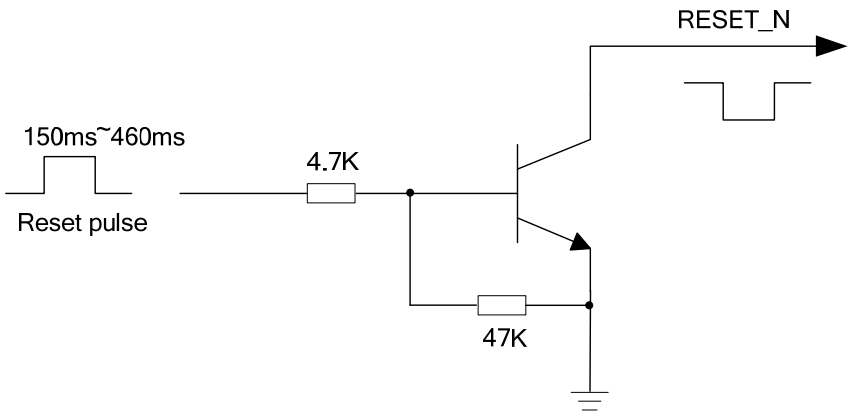

Figure 16: Reference Circuit of RESET_N by Using Driving Circuit

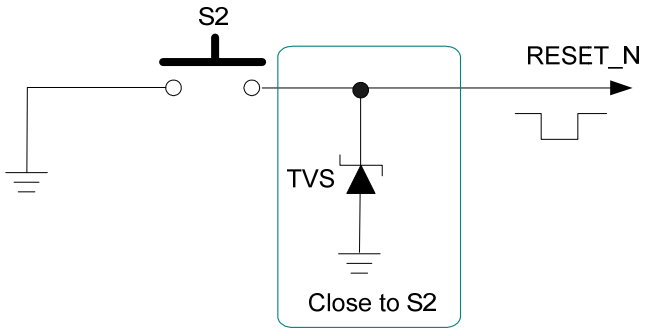

Figure 17: Reference Circuit of RESET_N by Using Button

The reset scenario is illustrated in the following figure.

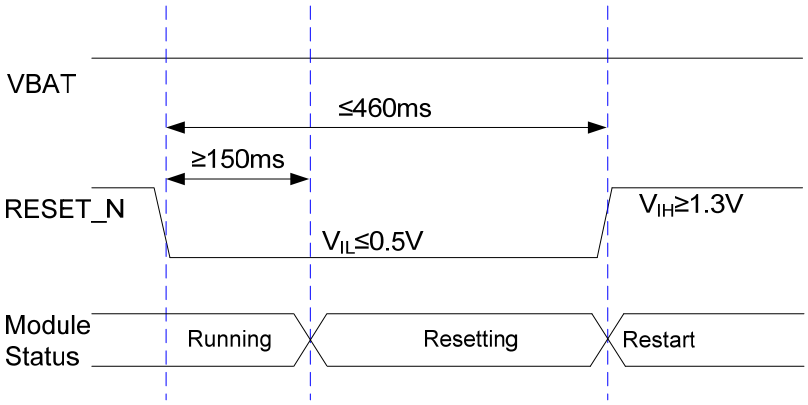

Figure 18: Timing of Resetting Module

NOTES

1. Use RESET_N only when turning off the module by AT command, API interface and PWRKEY pin all failed.
2. Please assure that there is no large capacitance on PWRKEY and RESET_N pins.

3.9. (U)SIM Interface

The (U)SIM interface circuitry meets ETSI and IMT-2000 requirements. Both 1.8V and 3.0V (U)SIM cards are supported.

Table 12: Pin Definition of (U)SIM Interface

Pin Name	Pin No.	I/O	Description	Comment
USIM_VDD	26	PO	Power supply for (U)SIM card	Either 1.8V or 3.0V is supported by the module automatically.
USIM_DATA	29	IO	Data signal of (U)SIM card	
USIM_CLK	27	DO	Clock signal of (U)SIM card	
USIM_RST	28	DO	Reset signal of (U)SIM card	
USIM_ PRESENCE	25	DI	(U)SIM card insertion detection	
USIM_GND	24		Specified ground for (U)SIM card	

AG35-Quecopen supports (U)SIM card hot-plug via the USIM_PRESENCE pin. The function supports low level and high level detections, and is disabled by default. Please refer to ***document [2]*** about **AT+QSIMDET** command.

The following figure shows a reference design for (U)SIM interface with an 8-pin (U)SIM card connector.

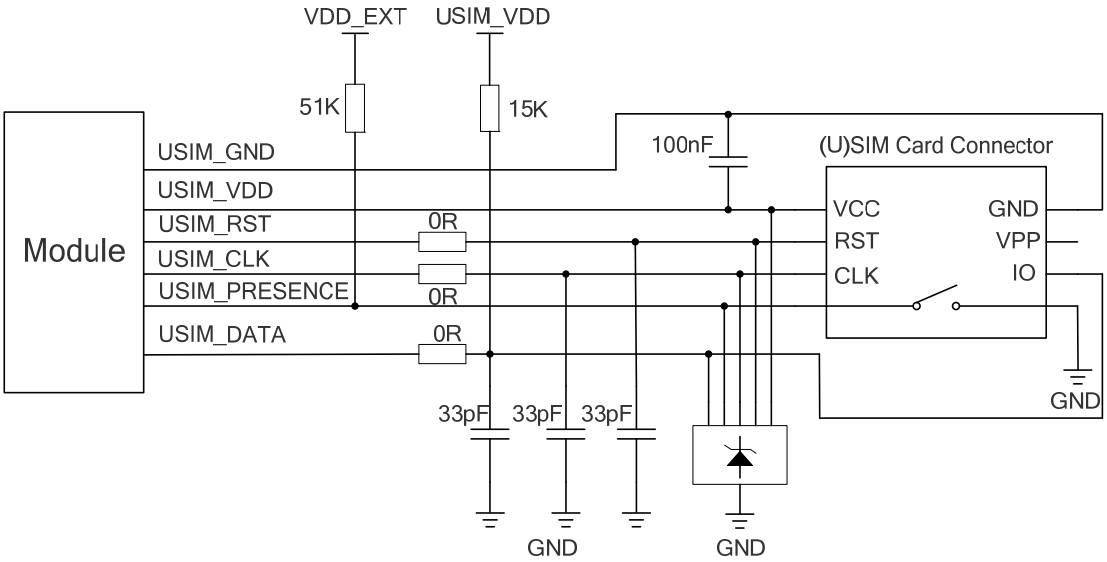

Figure 19: Reference Circuit of (U)SIM Interface with an 8-Pin (U)SIM Card Connector

If (U)SIM card detection function is not needed, then USIM_PRESENCE can be used for other functions. Please refer to ***Table 5*** for more details. A reference circuit for (U)SIM interface with a 6-pin (U)SIM card connector is illustrated in the following figure.

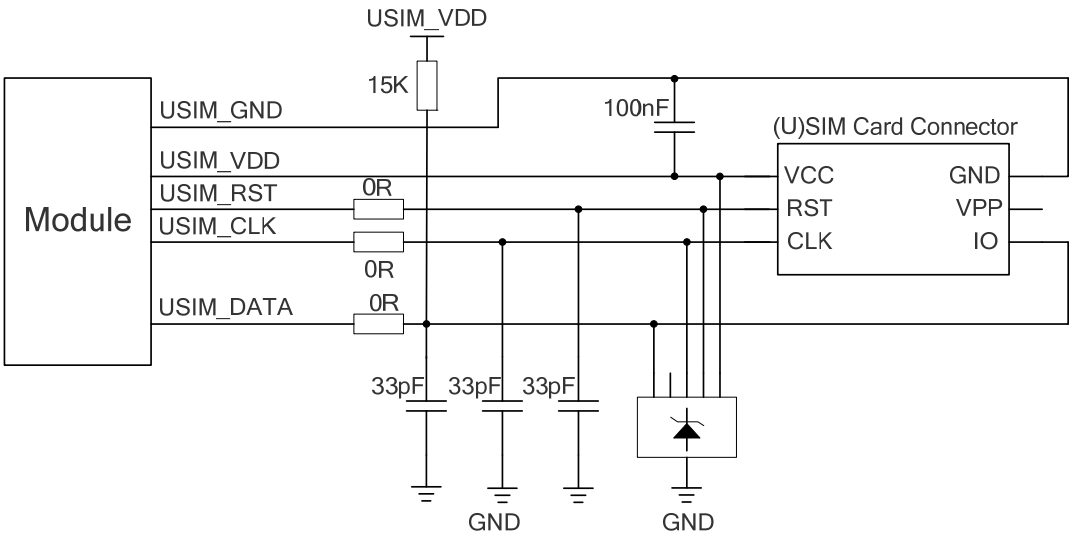

Figure 20: Reference Circuit of (U)SIM Interface with a 6-Pin (U)SIM Card Connector

In order to enhance the reliability and availability of the (U)SIM card in customers' applications, please follow the criteria below in the (U)SIM circuit design:

- Keep the placement of (U)SIM card connector as close to the module as possible. Keep the trace length as less than 200mm as possible.
- Keep (U)SIM card signals away from RF and VBAT traces.
- Assure the trace between the ground of the module and that of the (U)SIM card connector short and wide. Keep the trace width of ground and USIM_VDD no less than 0.5mm to maintain the same electric potential.
- To avoid cross-talk between USIM_DATA and USIM_CLK, keep them away from each other and shield them with surrounded ground.
- In order to offer good ESD protection, it is recommended to add a TVS diode array with parasitic capacitance not exceeding 10pF. The 0Ω resistors should be added in series between the module and the (U)SIM card connector so as to suppress EMI spurious transmission and enhance ESD protection. The 33pF capacitors are used for filtering interference of EGSM900. Please note that the (U)SIM peripheral circuit should be close to the (U)SIM card connector.
- The pull-up resistor on USIM_DATA line can improve anti-jamming capability when long layout trace and sensitive occasions are applied, and should be placed close to the (U)SIM card connector.

NOTE

The load capacitance of (U)SIM interface will affect rise and fall time of the data exchange.

3.10. USB Interface

AG35-Quecopen contains one integrated Universal Serial Bus (USB) interface which complies with the USB 2.0 specification and supports high-speed (480Mbps) and full-speed (12Mbps) modes. The USB interface is used for AT command communication, data transmission, GNSS NMEA sentences output, software debugging, firmware upgrade and voice over USB*. The following table shows the pin definition of USB interface.

Table 13: Pin Description of USB Interface

Pin Name	Pin No.	I/O	Description	Comment
USB_VBUS	32	PI	USB connection detection	Typical 5.0V Maximum current: 1mA
USB_DM	33	IO	USB differential data bus (-)	Require differential impedance of 90Ω
USB_DP	34	IO	USB differential data bus (+)	
GND	30		Ground	

For more details about the USB 2.0 specifications, please visit http://www.usb.org/home.

The USB interface is recommended to be reserved for firmware upgrade in application design. The following figure shows a reference circuit of USB interface.

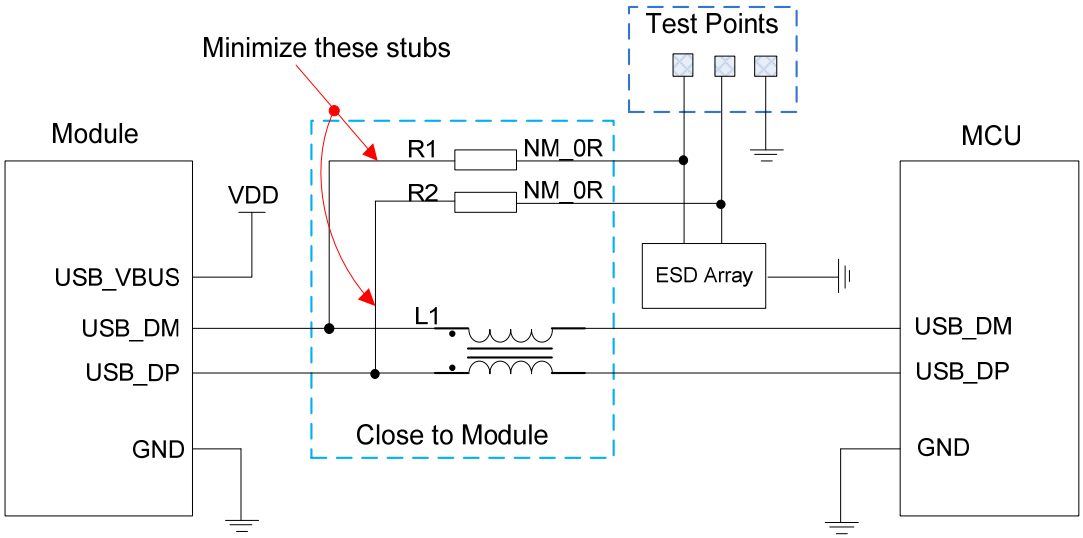

Figure 21: Reference Circuit of USB Application

In order to ensure signal integrity of USB data lines, components R1, R2 and L1 must be placed close to the module, and also these resistors should be placed close to each other. The extra stubs of trace must be as short as possible.

The following principles should be complied with when design the USB interface, so as to meet USB 2.0 specification.

- It is important to route the USB signal traces as differential pairs with total grounding. The impedance of USB differential trace is 90Ω.
- Do not route signal traces under crystals, oscillators, magnetic devices and RF signal traces. It is important to route the USB differential traces in inner-layer with ground shielding on not only upper and lower layers but also right and left sides.
- Pay attention to the influence of junction capacitance of ESD protection components on USB data lines. Typically, the capacitance value should be less than 2pF.
- Keep the ESD protection components as close to the USB connector as possible.

NOTES

1. The module supports USB host mode, provided that a GPIO signal is available for USB mode control. USB mode switching is effective after module reboot.
2. "*" means under development.

3.11. UART Interfaces

The module provides six UART interfaces: UART1~UART5 and debug UART. The following are the features of these UART interfaces.

- UART1~UART4 have the same functions. They all support RTS and CTS hardware flow control, and are used for data transmission with peripherals.
- UART1~UART5 support 4800bps, 9600bps, 19200bps, 38400bps, 57600bps, 115200bps, 230400bps, 460800bps and 921600bps baud rates, and the default is 115200bps.
- UART3 is multiplexed from SPI. UART4 and UART5 are multiplexed from SDIO1.
- UART5 does not support hardware flow control.
- The debug UART interface supports 115200bps baud rate, and is used for Linux console and log output.

The following tables show the pin definition of the UART interfaces.

Table 14: Pin Definition of UART1 Interface

Pin Name	Pin No.	I/O	Description	Comment
UART1_CTS	56	DO	DTE clear to send	1.8V power domain
UART1_RTS	57	DI	DTE request to send	1.8V power domain
UART1_RXD	58	DI	Receive data	1.8V power domain
UART1_TXD	60	DO	Transmit data	1.8V power domain

Table 15: Pin Definition of UART2 Interface

Pin Name	Pin No.	I/O	Function		
			Alternate Function 1 (Default)	Alternate Function 2	Alternate Function 3
UART2_TXD	163	DO	UART_TXD_BLSP5	GPIO_8	SPI_MOSI_BLSP5
UART2_CTS	164	DO	UART_CTS_BLSP5	GPIO_11	SPI_CLK_BLSP5
UART2_RXD	165	DI	UART_RXD_BLSP5	GPIO_9	SPI_MISO_BLSP5
UART2_RTS	166	DI	UART_RTS_BLSP5	GPIO_10	SPI_CS_N_BLSP5

Table 16: Pin Definition of UART3 Interface (Multiplexed from SPI)

Pin Name	Pin No.	I/O	Function			
			Alternate Function 1 (Default)	Alternate Function 2	Alternate Function 3	Alternate Function 4
SPI_MOSI	77	DO	SPI_MOSI_BLSP6	GPIO_20	UART_TXD_BLSP6	PCM_1_SYNC
SPI_MISO	78	DI	SPI_MISO_BLSP6	GPIO_21	UART_RXD_BLSP6	PCM_1_DIN
SPI_CS_N	79	DO	SPI_CS_N_BLSP6	GPIO_22	UART_RTS_BLSP6	PCM_1_DOUT
SPI_CLK	80	DO	SPI_CLK_BLSP6	GPIO_23	UART_CTS_BLSP6	PCM_1_CLK

Table 17: Pin Definition of UART4 Interface (Multiplexed from SDIO1)

Pin Name	Pin No.	I/O	Function		
			Alternate Function 1 (Default)	Alternate Function 2	Alternate Function 3
SDC1_DATA0	20	IO	SDC1_DATA0	GPIO_15	UART_CTS_BLSP1
SDC1_DATA1	21	IO	SDC1_DATA1	GPIO_14	UART_RTS_BLSP1
SDC1_DATA2	22	IO	SDC1_DATA2	GPIO_13	UART_RXD_BLSP1
SDC1_DATA3	23	IO	SDC1_DATA3	GPIO_12	UART_TXD_BLSP1

Table 18: Pin Definition of UART5 Interface (Multiplexed from SDIO1)

Pin Name	Pin No.	I/O	Function		
			Alternate Function 1 (Default)	Alternate Function 2	Alternate Function 3
SDC1_CMD	18	IO	SDC1_CMD	GPIO_17	UART_RXD_BLSP4
SDC1_CLK	19	DO	SDC1_CLK	GPIO_16	UART_TXD_BLSP4

Table 19: Pin Definition of Debug UART Interface

Pin Name	Pin No.	I/O	Description	Comment
DBG_TXD	71	DO	Transmit data	1.8V power domain
DBG_RXD	72	DI	Receive data	1.8V power domain

NOTE

The non-default alternate functions mentioned in the above two tables take effect only after software configuration. Please refer to corresponding chapters for details.

The logic levels of the UART interfaces are described in the table below.

Table 20: Logic Levels of Digital I/O

Parameter	Min.	Max.	Unit
V_{IL}	-0.3	0.6	V
V_{IH}	1.2	2.0	V
V_{OL}	0	0.45	V
V_{OH}	1.35	1.8	V

The module provides 1.8V UART interfaces. A level translator should be used if customers' application is equipped with a 3.3V UART interface. A level translator TXS0104E-Q1 provided by *Texas Instruments* (please visit http://www.ti.com for more information) is recommended. The following figure shows a reference design.

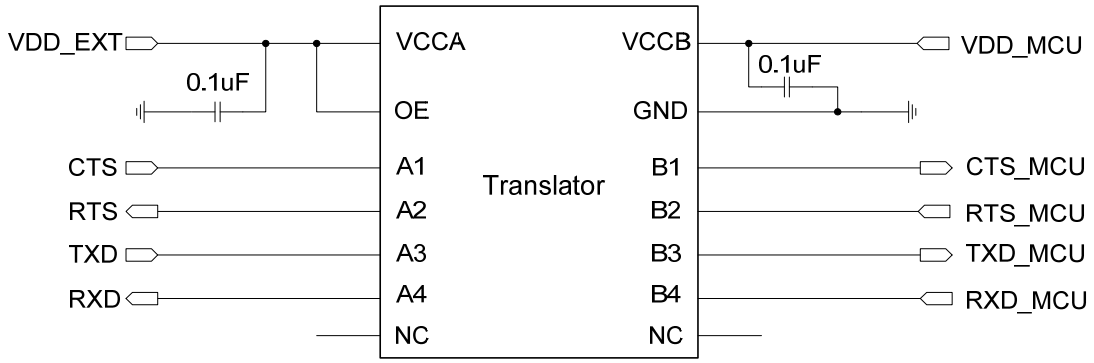

Figure 22: Reference Circuit with Translator Chip

Another example with transistor translation circuit is shown as below. The circuit design of dotted line section can refer to the design of solid line section, in terms of both module input and output circuit designs, but please pay attention to the direction of connection.

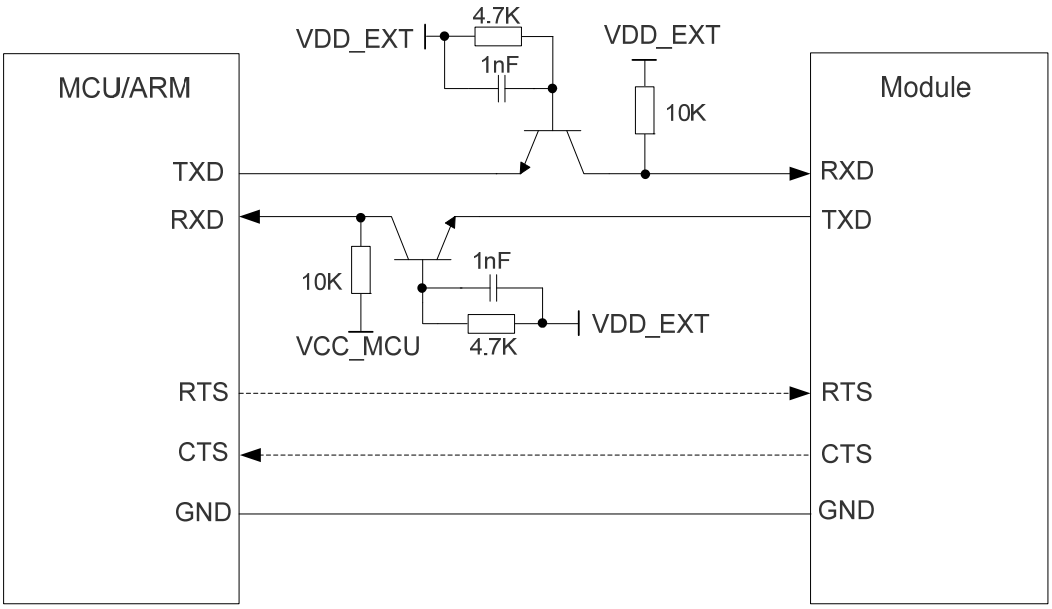

Figure 23: Reference Circuit with Transistor Circuit

NOTE

Transistor circuit solution is not suitable for applications with high baud rates exceeding 460Kbps.

3.12. Audio Interface (Optional)

AG35-Quecopen is designed with an optional built-in audio codec to enable analog audio function. The following table shows the pin definition of analog audio interface.

Table 21: Pin Definition of Analog Audio Interface

Pin Name	Pin No.	I/O	Description	Comment
SPK2_P	132	AO	Earphone analog output 2 (+)	
SPK2_N	133	AO	Earphone analog output 2 (-)	
SPK1_P	134	AO	Earphone analog output 1 (+)	
SPK1_N	135	AO	Earphone analog output 1 (-)	
MICBIAS	136	AO	Bias voltage output for microphone	

MIC2_N	137	AI	Microphone analog input 2 (-)
MIC2_P	138	AI	Microphone analog input 2 (+)
MIC1_N	139	AI	Microphone analog input 1 (-)
MIC1_P	140	AI	Microphone analog input 1 (+)
AGND	141		Analog ground

NOTES

1. The built-in codec uses the same signals as the module's PCM interface (pins 65~68) for external digital audio design. Therefore, when the built-in codec is utilized, the PCM interface cannot be used for other purposes (that is, keep pins 65~68 unconnected).
2. The built-in audio codec (analog audio function) is optional.

3.13. PCM and I2C Interfaces

AG35-Quecopen provides one Pulse Code Modulation (PCM) digital interface for audio design. The interface supports the following modes:

- Primary mode (short frame synchronization, works as both master and slave)
- Auxiliary mode (long frame synchronization, works as master only)

In primary mode, the data is sampled on the falling edge of the PCM_CLK and transmitted on the rising edge. The PCM_SYNC falling edge represents the MSB. In this mode, the PCM interface supports 256kHz, 512kHz, 1024kHz or 2048kHz PCM_CLK at 8kHz PCM_SYNC, and also supports 4096kHz PCM_CLK at 16kHz PCM_SYNC.

In auxiliary mode, the data is sampled on the falling edge of the PCM_CLK and transmitted on the rising edge. The PCM_SYNC rising edge represents the MSB. In this mode, the PCM interface operates with a 256kHz, 512kHz, 1024kHz or 2048kHz PCM_CLK and an 8kHz, 50% duty cycle PCM_SYNC.

AG35-Quecopen supports 16-bit linear data format. The following figures show the primary mode's timing relationship with 8kHz PCM_SYNC and 2048kHz PCM_CLK, as well as the auxiliary mode's timing relationship with 8kHz PCM_SYNC and 256kHz PCM_CLK.

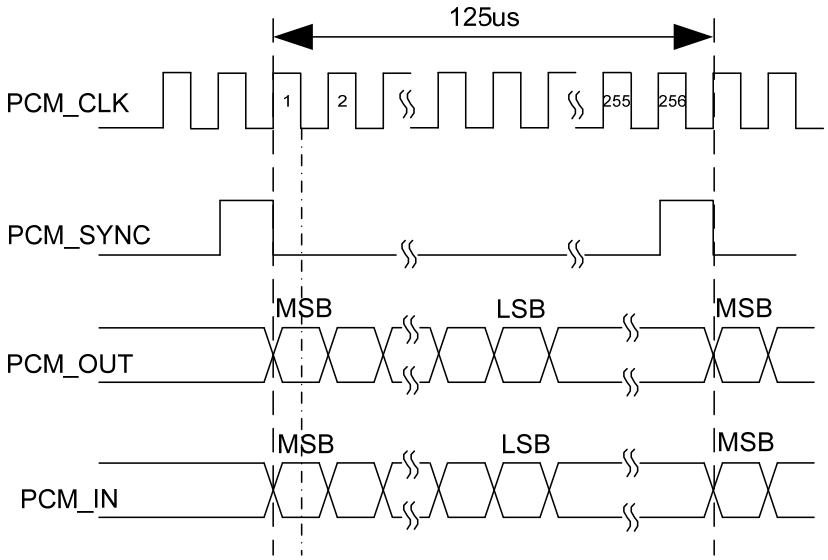

Figure 24: Primary Mode Timing

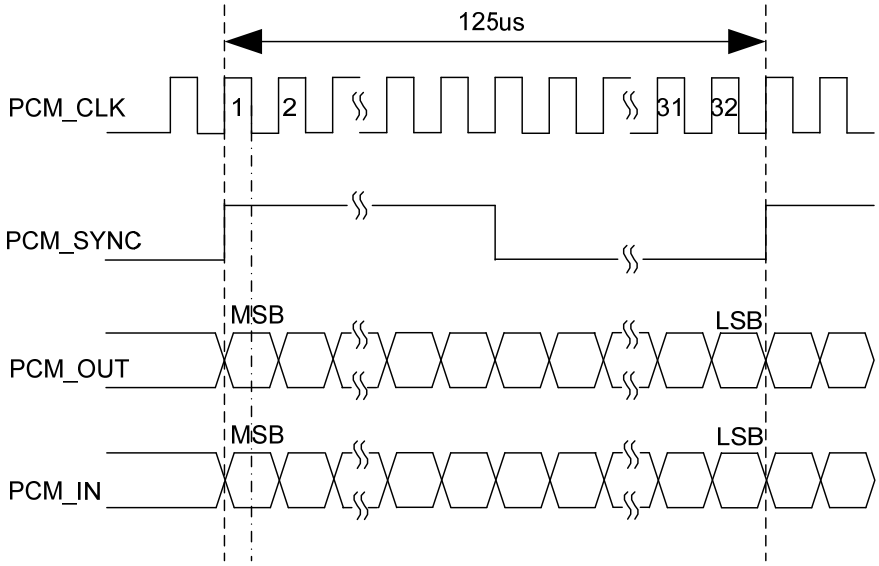

Figure 25: Auxiliary Mode Timing

The following table shows the pin definition of PCM and I2C interfaces which can be applied on audio codec design.

Table 22: Pin Definition of PCM Interface

Pin Name	Pin No.	I/O	Description	Comment
PCM_SYNC	65	IO	PCM data frame sync signal	1.8V power domain
PCM_IN	66	DI	PCM data input	1.8V power domain
PCM_CLK	67	IO	PCM data bit clock	1.8V power domain
PCM_OUT	68	DO	PCM data output	1.8V power domain
MCLK	152	DO	Output 12.288MHz	1.8V power domain

Table 23: Pin Definition of I2C Interfaces

Pin Name	Pin No.	I/O	Description	Comment
I2C1_SDA	42	IO	I2C1 serial data	Require external pull-up to 1.8V
I2C1_SCL	43	DO	I2C1 serial clock	Require external pull-up to 1.8V
I2C2_SDA	73	IO	I2C2 serial data	Require external pull-up to 1.8V
I2C2_SCL	74	DO	I2C2 serial clock	Require external pull-up to 1.8V

NOTES

By default, I2C1 is used for codec configuration while I2C2 is not available with any codec configuration driver.

1. When the built-in codec is used, its 8-bit address is 0x31 when reading and 0x30 when writing. In order to avoid conflicts, please avoid using I2C1 peripherals with the same addresses.
2. When the built-in codec is used, pin 152 and pins 65~68 will not be used.

Clock and mode can be configured by AT command, and the default configuration is master mode using short frame synchronization format with 2048kHz PCM_CLK and 8kHz PCM_SYNC. Please refer to ***document [2]*** about **AT+QDAI** command for details.

The following figure shows a reference design of PCM interface with an external codec IC.

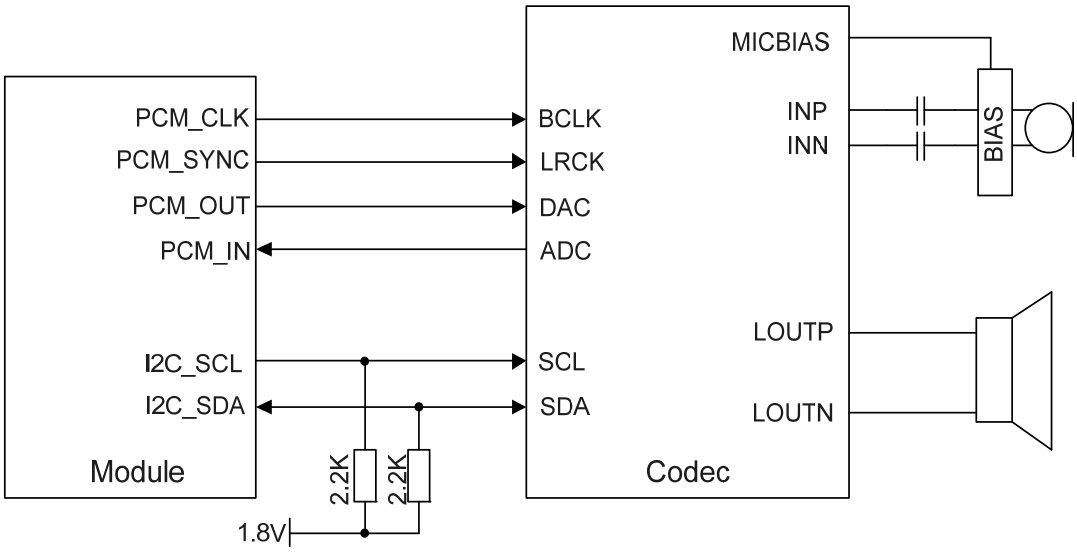

Figure 26: Reference Circuit of PCM Application with Audio Codec

NOTES

1. It is recommended to reserve an RC (R=22Ω, C=22pF) circuit on the PCM lines, especially for PCM_CLK.
2. AG35-Quecopen works as a master device pertaining to I2C interface.

3.14. SDIO Interfaces

AG35-Quecopen provides two SDIO interfaces which support SD 3.0 protocol.

3.14.1. SDIO1 Interface

SDIO1 interface is used for WLAN function. More details are provided in ***Chapter 3.17***.

3.14.2. SDIO2 Interface

SDIO2 interface supports SD card and eMMC (embedded MultiMediaCard).

The following tables show the pin definition of SDIO2 interface.

Table 24: Pin Definition of SDIO2 Interface

Pin Name	Pin No.	I/O	Description	Comment
VDD_SDIO	46	PO	SDIO pull-up power source	1.8V/2.85V configurable output. SDIO pull up power source for SD card. Keep it open for eMMC.
SDC2_DATA2	47	IO	SDIO data signal (bit 2)	SDIO signal level can be selected according to the one supported by SD card. 1.8V power domain for eMMC. Please refer to SD 3.0 protocol for more details.
SDC2_DATA3	48	IO	SDIO data signal (bit 3)	
SDC2_DATA0	49	IO	SDIO data signal (bit 0)	
SDC2_DATA1	50	IO	SDIO data signal (bit 1)	
SDC2_CMD	51	IO	SDIO commend single	
SDC2_CLK	53	DO	SDIO bus clock	
SD_INS_DET	52	DI/DO	**DI:** Insertion detection for SD card. **DO**: Reset eMMC [1].	

NOTE

[1] SD_INS_DET for eMMC resetting function is currently not supported.

3.14.2.1. Reference Design for SD Card Application

The following figure shows a reference design of SDIO2 interface for SD card application.

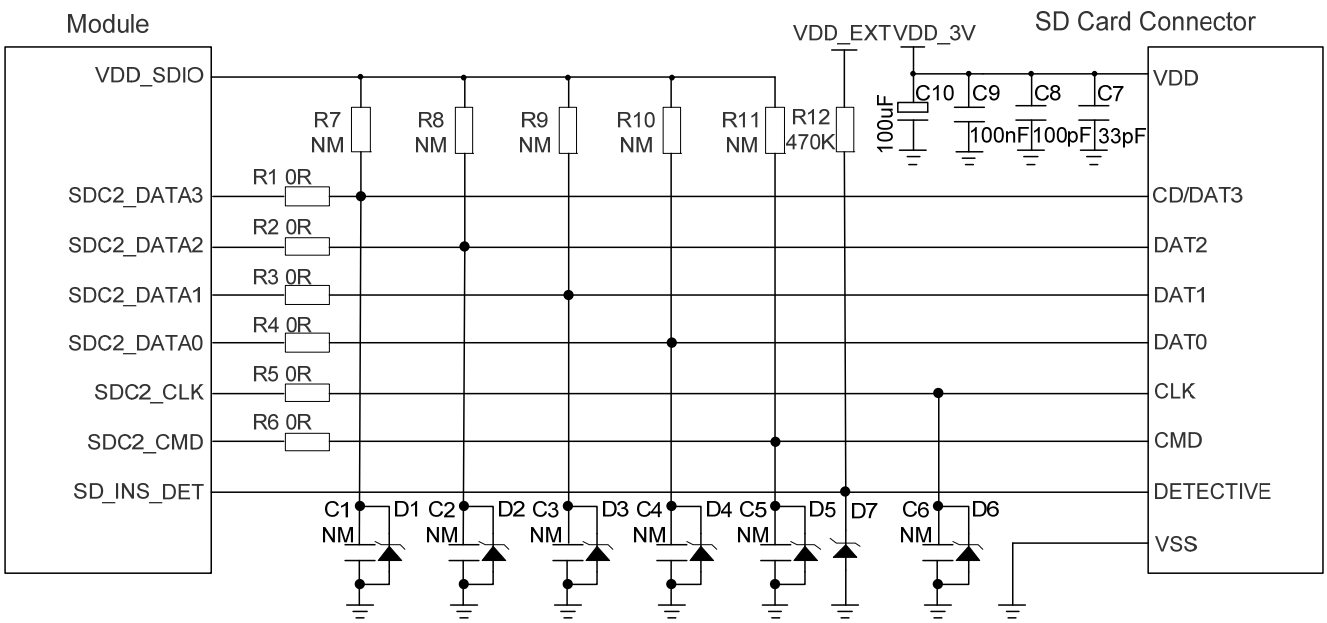

Figure 27: Reference Circuit Design for SD Card Application

Please follow the principles below in the SD card circuit design:

- The voltage range of SD card power supply VDD_3V is 2.7~3.6V and a sufficient current up to 0.8A should be provided. As the maximum output current of VDD_SDIO is 50mA which can only be used for SDIO pull-up resistors, an externally power supply is needed for SD card.
- To avoid jitter of bus, it is recommended to reserve resistors R7~R11 for pulling up SDIOs to VDD_SDIO. The resistors are not mounted by default, and the recommended resistor value is among 10~100kohm.
- In order to improve signal quality, it is recommended to add 0Ω resistors R1~R6 in series between the module and the SD card. The bypass capacitors C1~C6 are reserved and not mounted by default. All resistors and bypass capacitors should be placed close to the module.
- In order to offer good ESD protection, it is recommended to add TVS with capacitance value less than 2pF on SD card pins.
- It is important to route the SDIO signal traces with total grounding. The impedance of SDIO data trace is 50Ω (±10%).
- Keep SDIO signals far away from other sensitive circuits/signals such as RF circuits, analog signals, etc., as well as noisy signals such as clock signals, DCDC signals, etc.
- It is recommended to keep the trace length difference between CLK and DATA/CMD less than 1mm and the total routing length less than 50mm. The total trace length inside the module is 23mm, so the exterior total trace length should be less than 27mm.
- Make sure the adjacent trace spacing is two times of the trace width and the load capacitance of SDIO bus should be less than 40pF.

3.14.2.2. Reference Design for eMMC Application

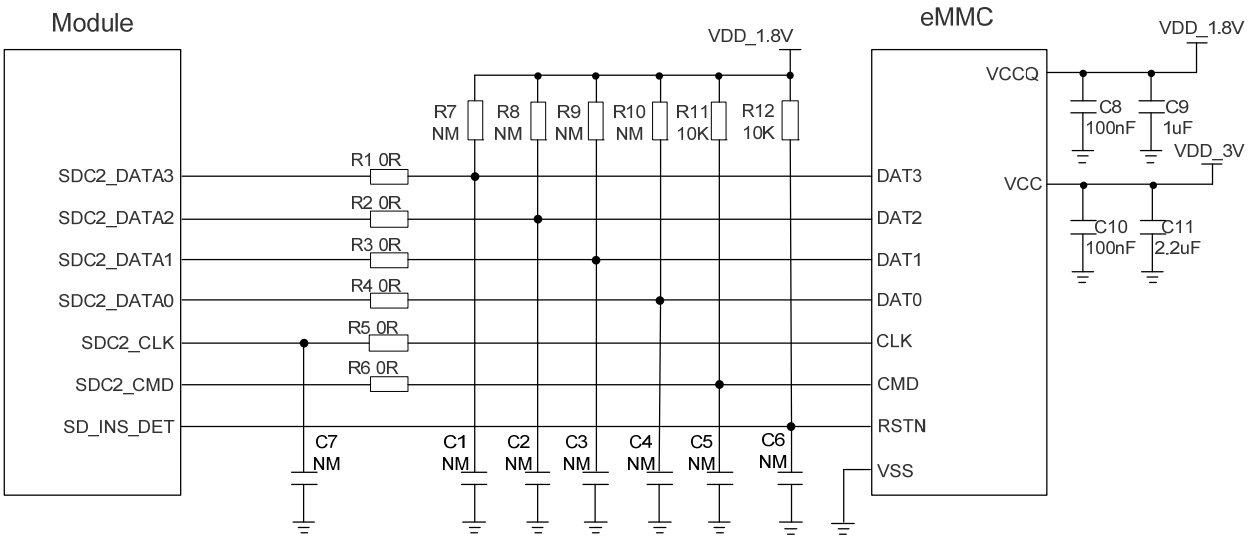

Figure 28: Reference Circuit Design for eMMC Application

Please follow the principles below in eMMC circuit design:

- To avoid jitter of bus, it is recommended to reserve resistors R7~R11 for pulling up SDIOs to VDD_1.8V. Resistors R7~R10 are not mounted by default, and the recommended resistor value is 10~100kΩ.
- In order to improve signal quality, it is recommended to add 0Ω resistors R1~R6 in series between the module and eMMC. The bypass capacitors C1~C7 are reserved and not mounted by default. All resistors and bypass capacitors should be placed close to the module.
- It is important to route the SDIO signal traces with total grounding. The impedance of SDIO data trace is 50Ω (±10%).
- Keep SDIO signals far away from other sensitive circuits/signals such as RF circuits, analog signals, etc., as well as noisy signals such as clock signals, DCDC signals, etc.
- It is recommended to keep the trace length difference between CLK and DATA/CMD less than 1mm and the total routing length less than 50mm. The total trace length inside the module is 23mm, so the exterior total trace length should be less than 27mm.
- Make sure the adjacent trace spacing is two times of the trace width and the load capacitance of SDIO bus should be less than 40pF.

3.15. SPI Interfaces

AG35-Quecopen provides three SPI interfaces (two of them multiplexed from UARTs) supporting only master mode. The maximum clock frequency of SPI1 and SPI3 is up to 50MHz, while that of SPI2 is 38MHz.

The following tables show the pin definition of SPI interfaces.

Table 25: Pin Definition of SPI1 Interface

Pin Name	Pin No.	I/O	Description	Comment
SPI_MOSI	77	DO	SPI master out slave in	1.8V power domain. If unused, keep it open.
SPI_MISO	78	DI	SPI master in slave out	1.8V power domain. If unused, keep it open.
SPI_CS_N	79	DO	SPI chip selection	1.8V power domain. If unused, keep it open.
SPI_CLK	80	DO	SPI serial clock	1.8V power domain. If unused, keep it open.

Table 26: Pin Definition of SPI2 Interface (Multiplexed from UART1)

Pin Name	Pin No.	I/O	Function		
			Alternate Function 1 (Default)	Alternate Function 2	Alternate Function 3
UART1_CTS	56	DO	UART_CTS_BLSP3	GPIO_3	SPI_CLK_BLSP3
UART1_RTS	57	DI	UART_RTS_BLSP3	GPIO_2	SPI_CS_N_BLSP3
UART1_RXD	58	DI	UART_RXD_BLSP3	GPIO_1	SPI_MISO_BLSP3
UART1_TXD	60	DO	UART_TXD_BLSP3	GPIO_0	SPI_MOSI_BLSP3

Table 27: Pin Definition of SPI3 Interface (Multiplexed from UART2)

Pin Name	Pin No.	I/O	Function		
			Alternate Function 1 (Default)	Alternate Function 2	Alternate Function 3
UART2_TXD	163	DO	UART_TXD_BLSP5	GPIO_8	SPI_MOSI_BLSP5

UART2_CTS	164	DO	UART_CTS_BLSP5	GPIO_11	SPI_CLK_BLSP5
UART2_RXD	165	DI	UART_RXD_BLSP5	GPIO_9	SPI_MISO_BLSP5
UART2_RTS	166	DI	UART_RTS_BLSP5	GPIO_10	SPI_CS_N_BLSP5

NOTE

For more details about non-default alternate functions for the pins mentioned in the above table, please refer to corresponding chapters.

The following figure shows the timing relationship of SPI interfaces. The related parameters of SPI timing are shown in the table below.

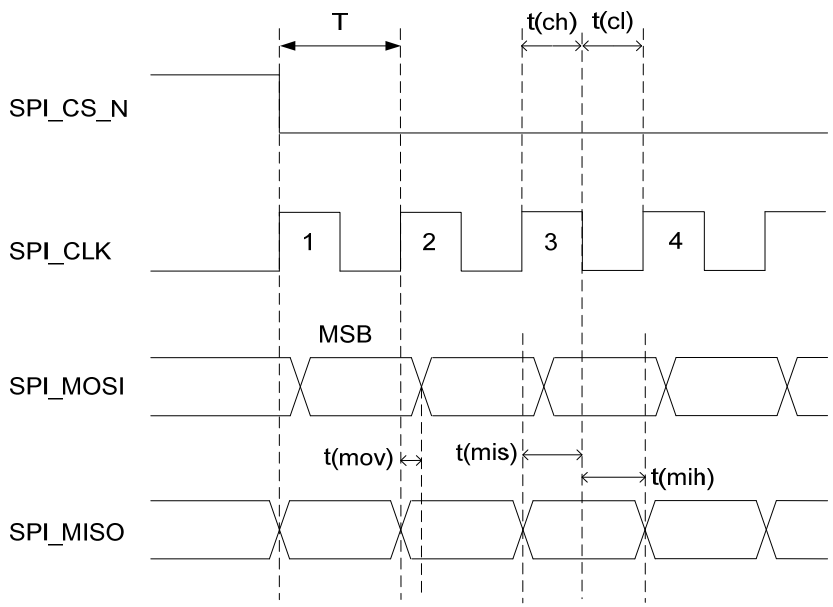

Figure 29: SPI Timing

Table 28: Parameters of SPI Interface Timing

Parameter	Description	Min	Typical	Max	Unit
T	SPI clock period	20.0	-	-	ns
t(ch)	SPI clock high-level time	9.0	-	-	ns
t(cl)	SPI clock low-level time	9.0	-	-	ns
t(mov)	SPI master data output valid time	-5.0	-	5.0	ns

t(mis)	SPI master data input setup time	5.0	-	-	ns
t(mih)	SPI master data input hold time	1.0	-	-	ns

NOTE

The module provides 1.8V SPI interfaces. A level translator should be used between the module and the host if customers' application is equipped with a 3.3V processor or device interface.

3.16. SGMII Interface (Optional)

AG35-Quecopen includes an integrated Ethernet MAC with an SGMII interface and two management interfaces. Key features of the SGMII interface are shown below:

- IEEE802.3 compliant
- Half/full duplex for 10/100/1000Mbps
- Support VLAN tagging
- Support IEEE1588 and Precision Time Protocol (PTP)
- Can be used to connect to external Ethernet PHY like DP83TC811S-Q1, or to an external switch
- Management interfaces support dual power domains: 1.8V and 2.85V.

The following table shows the pin definition of SGMII interface.

Table 29: Pin Definition of SGMII Interface

Pin Name	Pin No.	I/O	Description	Comment
MDIO Interface				
EPHY_RST_N	6	DO	Ethernet PHY reset	1.8V/2.85V power domain
EPHY_INT_N	9	DI	Ethernet PHY interrupt	1.8V power domain
SGMII_MDATA	8	IO	SGMII MDIO (Management Data Input/Output) data	1.8V/2.85V power domain
SGMII_MCLK	7	DO	SGMII MDIO (Management Data Input/Output) clock	1.8V/2.85V power domain
VDD_MDIO	4	PO	SGMII MDIO pull-up power source	1.8V/2.85V power domain. External pull-up power source for SGMII MDIO pins.

SGMII Signal Part				
SGMII_TX_M	15	AO	SGMII transmission (-)	Connect with a 0.1uF capacitor, close to the PHY side.
SGMII_TX_P	14	AO	SGMII transmission (+)	Connect with a 0.1uF capacitor, close to the PHY side.
SGMII_RX_P	12	AI	SGMII receiving (+)	
SGMII_RX_M	11	AI	SGMII receiving (-)	

The following figure shows the simplified block diagram for Ethernet application.

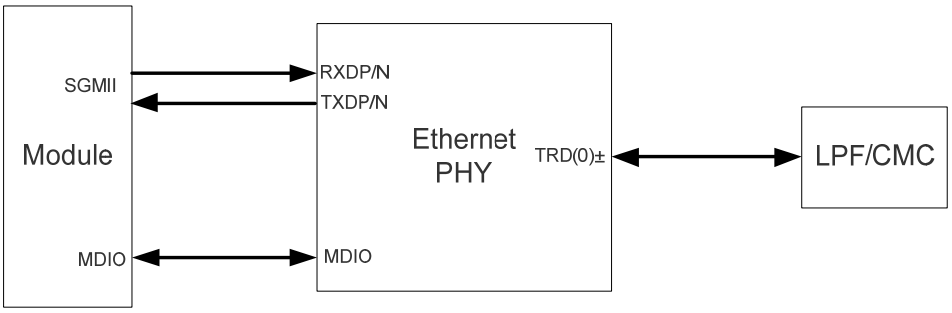

Figure 30: Simplified Block Diagram for Ethernet Application

The following figure shows a reference design of SGMII interface with PHY application.

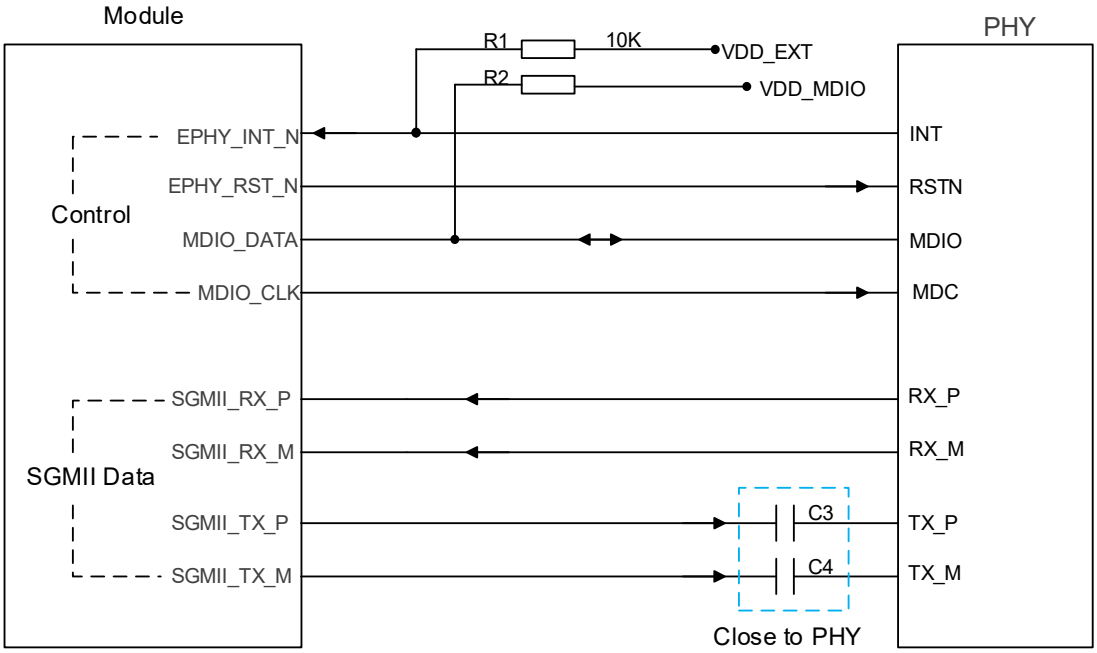

Figure 31: Reference Circuit of SGMII Interface with PHY Application

In order to enhance the reliability and availability of customers' application, please follow the criteria below in the Ethernet PHY circuit design:

- Keep SGMII data and control signals away from RF and VBAT traces.
- Keep the maximum trace length less than 10 inches and keep the intra-pair length matching less than 20 mils.
- The differential impedance of SGMII data trace is 100Ω±10%.
- To minimize crosstalk, the distance between separate adjacent pairs that are on the same layer must be equal to or larger than 40 mils.
- The resistor R2 should be placed near the PHY, and its value varies according to the selection of PHY.

3.17. Wireless Connectivity Interfaces

AG35-Quecopen provides a low-power SDIO 3.0 interface (SDIO1 interface) for WLAN function and UART & PCM interfaces for BT function*.

The following table shows the pin definition of wireless connectivity interfaces.

Table 30: Pin Definition of Wireless Connectivity Interfaces

Pin Name	Pin No.	I/O	Description			
			Alternate Function 1 (Default)	Alternate Function 2	Alternate Function 3	Alternate Function 4
WLAN Power Supply						
PM_ENABLE	5	DO	PM_ENABLE	PMU_GPIO_3		
WLAN Interface						
SDC1_CMD	18	IO	SDC1_CMD	GPIO_17		
SDC1_CLK	19	DO	SDC1_CLK	GPIO_16		
SDC1_DATA0	20	IO	SDC1_DATA0	GPIO_15		
SDC1_DATA1	21	IO	SDC1_DATA1	GPIO_14		
SDC1_DATA2	22	IO	SDC1_DATA2	GPIO_13		
SDC1_DATA3	23	IO	SDC1_DATA3	GPIO_12		

WLAN_EN	149	DO	WLAN_EN	GPIO_54		
WLAN_WAKE [1)]	160	DI	WLAN_WAKE			
WLAN_SLP_ CLK	169	DO	WLAN_SLP_ CLK			
Coexistence Interface						
COEX_UART_ TX	145	DO	COEX_UART_ TX			
COEX_UART_ RX/ USB_BOOT	146	DI	COEX_UART_ RX			
BT Interface*						
BT_EN*	3	DO	BT_EN*			
UART2_TXD	163	DO	UART_TXD_ BLSP5	GPIO_8	SPI_MOSI_ BLSP5	
UART2_CTS	164	DO	UART_CTS_ BLSP5	GPIO_11	SPI_CLK_ BLSP5	
UART2_RXD	165	DI	UART_RXD_ BLSP5	GPIO_9	SPI_MISO_ BLSP5	
UART2_RTS	166	DI	UART_RTS_ BLSP5	GPIO_10	SPI_CS_N_ BLSP5	
SPI_MOSI	77	DO	SPI_MOSI_ BLSP6	GPIO_20	UART_TXD_ BLSP6	PCM_1A_ SYNC
SPI_MISO	78	DI	SPI_MISO_ BLSP6	GPIO_21	UART_RXD_ BLSP6	PCM_1A _IN
SPI_CS_N	79	DO	SPI_CS_N_ BLSP6	GPIO_22	UART_RTS_ BLSP6	PCM_1A_OUT
SPI_CLK	80	DO	SPI_CLK_ BLSP6	GPIO_23	UART_CTS_ BLSP6	PCM_1A _CLK

NOTES

1. For more details about non-default alternate functions for the pins mentioned in the above table, please refer to corresponding chapters.
2. When WLAN or BT function is used, the coexistence interfacemust be used simultaneously.
3. [1)] The internal pull-up and pull-down resistors of pin 160 (WLAN_WAKE) range between 5kΩ and 50 kΩ, and the typical value is 7kΩ.
4. "*" means under development.

The following figure shows a reference design for the connection between wireless connectivity interfaces and Quectel AF20 module.

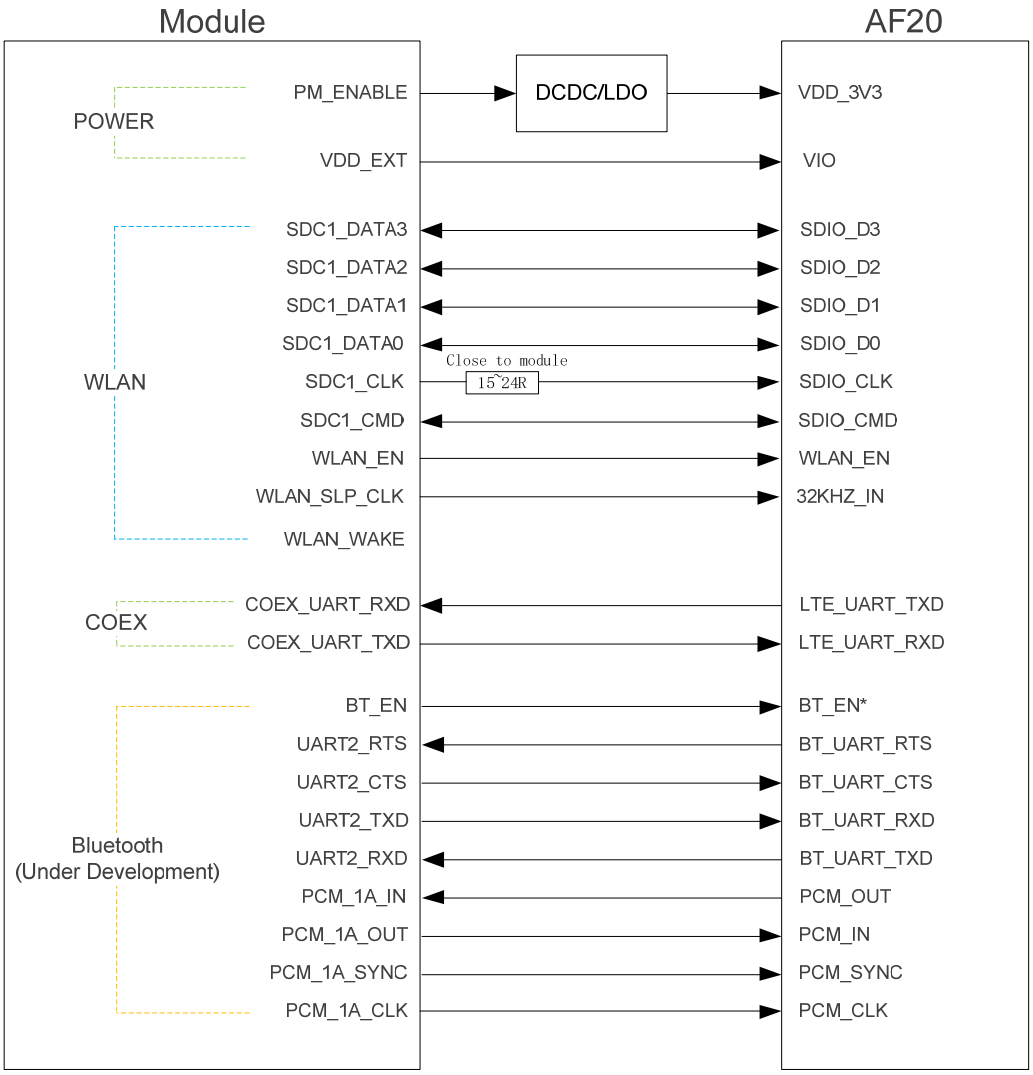

Figure 32: Reference Circuit for Connection with AF20 Module

NOTES

1. AF20 module can only be used as a slave device.
2. When BT function is enabled on AG35-Quecopen module, PCM_SYNC and PCM_CLK pins are only used to output signals.
3. For more information about wireless connectivity interfaces application, please refer to ***document [7]***.
4. "*" means under development.

3.17.1. WLAN Interface

AG35-Quecopen provides SDIO1 interface and a control interface for WLAN design.

The WLAN interface (SDIO1 interface) supports the following modes:

- Single data rate (SDR) mode (up to 208MHz)
- Double data rate (DDR) mode (up to 50MHz)

As SDIO signals are very high-speed signals, in order to ensure the SDIO1 interface design corresponds with the SDIO 3.0 specification, please comply with the following principles:

- It is important to route the SDIO signal traces with total grounding. The impedance of SDIO signal trace is 50Ω (±10%).
- Keep SDIO signals far away from other sensitive circuits/signals such as RF circuits, analog signals, etc., as well as noisy signals such as clock signals, DCDC signals, etc.
- It is recommended to keep the trace length difference between CLK and DATA/CMD less than 1mm and the total routing length less than 50mm. The total length of SDIO signal traces inside AG35-Quecopen module is 12mm and that inside AF20 is 10mm, so the exterior total trace length should be less than 28mm.
- Keep termination resistors within 15~24Ω on clock lines near the module and keep the route distance from the module clock pins to termination resistors less than 5mm.
- Make sure the adjacent trace spacing is two times of the trace width and the bus capacitance is less than 40pF.

3.17.2. BT Interface*

More information about BT interface will be added in the future version of this document.

NOTE

"*" means under development.

3.18. ADC Interfaces

The module provides three analog-to-digital converter (ADC) interfaces. The voltage value on ADC pins can be read via **AT+QADC=<port>** command, through setting **<port>** into 0, 1 or 2. For more details about the AT command, please refer to ***document [2]***.

- **AT+QADC=0**: read the voltage value on ADC0
- **AT+QADC=1**: read the voltage value on ADC1
- **AT+QADC=2**: read the voltage value on ADC2

In order to improve the accuracy of ADC, the traces of ADC interfaces should be surrounded by ground.

Table 31: Pin Definition of ADC Interfaces

Pin Name	Pin No.	Description
ADC2	172	General purpose analog to digital converter interface
ADC1	175	General purpose analog to digital converter interface
ADC0	173	General purpose analog to digital converter interface

The following table describes the characteristic of ADC interfaces.

Table 32: Characteristic of ADC Interfaces

Parameter	Min.	Typ.	Max.	Unit
ADC2 Voltage Range	0.1		1.7	V
ADC1 Voltage Range	0.3		VBAT_BB	V
ADC0 Voltage Range	0.3		VBAT_BB	V
ADC Resolution		15		bits
ADC Sample Rate		2.4		MHz

NOTES

1. The input voltage for each ADC interface must not exceed its corresponding voltage range.
2. It is prohibited to supply any voltage to ADC pins when VBAT is removed.
3. It is recommended to use resistor divider circuit for ADC application.

3.19. Network Status Indication

AG35-Quecopen provides one network indication pin: NET_STATUS. The pin is used to drive a network status indication LED.

The following tables describe the pin definition and logic level changes of NET_STATUS in different network status.

Table 33: Pin Definition of the Network Status Indicator (NET_STATUS)

Pin Name	Pin No.	I/O	Description	Comment
NET_STATUS	170	DO	Indicate the module's network activity status.	1.8V power domain

Table 34: Working State of the Network Status Indicator (NET_STATUS)

Pin Name	Indicator Status (Logic Level Changes)	Network Status
NET_STATUS	Flicker slowly (200ms High/1800ms Low)	Network searching
	Flicker slowly (1800ms High/200ms Low)	Idle
	Flicker quickly (125ms High/125ms Low)	Data transfer is ongoing
	Always High	Voice calling

A reference circuit is shown in the following figure.

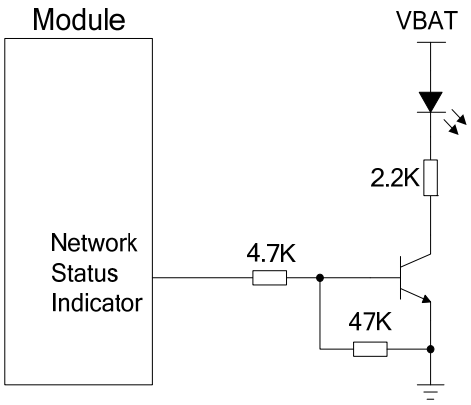

Figure 33: Reference Circuit of the Network Status Indicator

3.20. STATUS

The STATUS pin is an open drain output for indicating the module's operation status. It can be connected to a GPIO of DTE with a pulled up resistor, or as LED indication circuit as shown below. When the module is turned on normally, the STATUS will present a low level state. Otherwise, the STATUS will present high-impedance state.

Table 35: Pin Definition of STATUS

Pin Name	Pin No.	I/O	Description	Comment
STATUS	171	OD	Indicate the module's operation status	Require external pull-up

The following figure shows different circuit designs of STATUS, and customers can choose either one according to specific application demands.

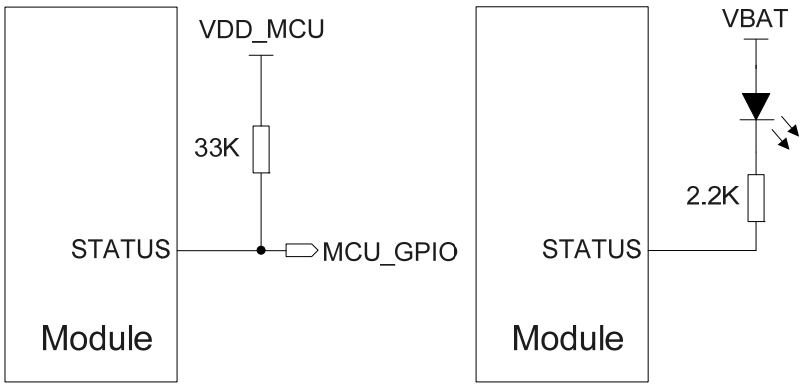

Figure 34: Reference Circuits of STATUS

NOTES

1. In sleep state, STATUS will still output a low voltage to drive the LED, causing an extra current consumption on VBAT. So it is recommended to replace VBAT with an external controllable power supply, and use it to switch off the power source during sleep state so as to reduce power consumption.
2. It is not recommended to use level translator circuit for STATUS.

3.21. USB_BOOT Interface

AG35-Quecopen provides a USB_BOOT pin which is multiplexed with COEX_UART_RX. Developers can pull up the USB_BOOT to VDD_EXT before powering on the module, thus the module will enter into emergency download mode when powered on. In this mode, the module supports firmware upgrade over USB interface.

Table 36: Pin Definition of USB_BOOT Interface

Pin Name	Pin No.	I/O	Description	Comment
COEX_ UART_RX/ USB_BOOT	146	DI	Force the module to enter into emergency download mode	1.8V power domain. Active high. If unused, keep it open.

The following figure shows a reference circuit of USB_BOOT interface.

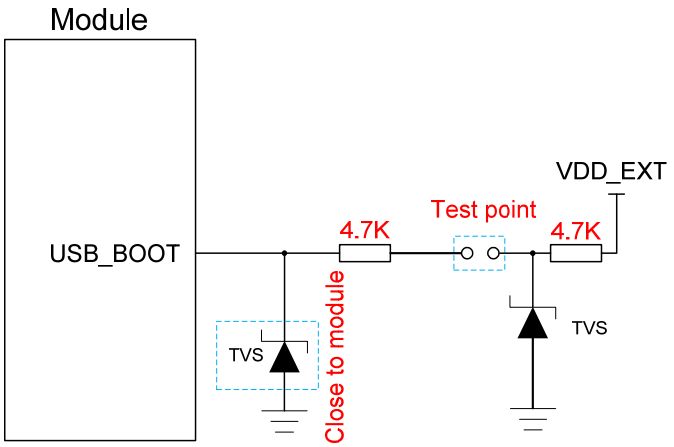

Figure 35: Reference Circuit of USB_BOOT Interface

3.22. RTC

AG35-Quecopen has a real time clock within the PMIC, but has no dedicated RTC power supply pin.

The RTC is powered by VBAT_BB. If VBAT_BB is removed, the RTC will not be maintained.

NOTE

If RTC needs to be maintained, then VBAT_BB must be powered all the time.

4 GNSS Receiver

4.1. General Description

AG35-Quecopen includes a fully integrated global navigation satellite system solution that supports Gen8C-Lite of Qualcomm (GPS, GLONASS, BeiDou, Galileo and QZSS).

AG35-Quecopen supports standard NMEA-0183 protocol, and outputs NMEA sentences at 10Hz data update rate via USB interface by default.

By default, GNSS engine of the module is switched off. It has to be switched on via AT command. For more details about GNSS engine technology and configurations, please refer to ***document [5]***.

4.2. GNSS Performance

The following table shows GNSS performance of AG35-Quecopen.

Table 37: AG35-CE GNSS Performance

Parameter	Description	Conditions	Typ.	Unit
Sensitivity (GNSS)	Cold start	Autonomous	-146	dBm
	Reacquisition	Autonomous	-158	dBm
	Tracking	Autonomous	-162	dBm
TTFF (GNSS)	Cold start @open sky	Autonomous	35	s
		XTRA enabled	18	s
	Warm start @open sky	Autonomous	26	s
		XTRA enabled	2.2	s

	Hot start @open sky	Autonomous	2.5	s
		XTRA enabled	1.8	s
Accuracy (GNSS)	CEP-50	Autonomous @open sky	< 2.5	m

Table 38: AG35-E GNSS Performance

Parameter	Description	Conditions	Typ.	Unit
Sensitivity (GNSS)	Cold start	Autonomous	TBD	dBm
	Reacquisition	Autonomous	TBD	dBm
	Tracking	Autonomous	TBD	dBm
TTFF (GNSS)	Cold start @open sky	Autonomous	TBD	s
		XTRA enabled	TBD	s
	Warm start @open sky	Autonomous	TBD	s
		XTRA enabled	TBD	s
	Hot start @open sky	Autonomous	TBD	s
		XTRA enabled	TBD	s
Accuracy (GNSS)	CEP-50	Autonomous @open sky	TBD	m

Table 39: AG35-NA GNSS Performance

Parameter	Description	Conditions	Typ.	Unit
Sensitivity (GNSS)	Cold start	Autonomous	-146.5	dBm
	Reacquisition	Autonomous	-158	dBm
	Tracking	Autonomous	-163	dBm
TTFF (GNSS)	Cold start @open sky	Autonomous	35	s
		XTRA enabled	18	s
	Warm start	Autonomous	26	s

	@open sky	XTRA enabled	2.2	s
	Hot start @open sky	Autonomous	2.5	s
		XTRA enabled	1.8	s
Accuracy (GNSS)	CEP-50	Autonomous @open sky	< 2.5	m

Table 40: AG35-LA GNSS Performance

Parameter	Description	Conditions	Typ.	Unit
Sensitivity (GNSS)	Cold start	Autonomous	TBD	dBm
	Reacquisition	Autonomous	TBD	dBm
	Tracking	Autonomous	TBD	dBm
TTFF (GNSS)	Cold start @open sky	Autonomous	TBD	s
		XTRA enabled	TBD	s
	Warm start @open sky	Autonomous	TBD	s
		XTRA enabled	TBD	s
	Hot start @open sky	Autonomous	TBD	s
		XTRA enabled	TBD	s
Accuracy (GNSS)	CEP-50	Autonomous @open sky	TBD	m

Table 41: AG35-J GNSS Performance

Parameter	Description	Conditions	Typ.	Unit
Sensitivity (GNSS)	Cold start	Autonomous	-146	dBm
	Reacquisition	Autonomous	-158	dBm
	Tracking	Autonomous	-162	dBm
TTFF (GNSS)	Cold start @open sky	Autonomous	35	s
		XTRA enabled	18	s

	Warm start @open sky	Autonomous	26	s
		XTRA enabled	2.2	s
	Hot start @open sky	Autonomous	2.5	s
		XTRA enabled	1.8	s
Accuracy (GNSS)	CEP-50	Autonomous @open sky	< 2.5	m

NOTES

1. Tracking sensitivity: the lowest GNSS signal value at the antenna port on which the module can keep on positioning for 3 minutes.
2. Reacquisition sensitivity: the lowest GNSS signal value at the antenna port on which the module can fix position again within 3 minutes after loss of lock.
3. Cold start sensitivity: the lowest GNSS signal value at the antenna port on which the module fixes position within 3 minutes after executing cold start command.

4.3. Layout Guidelines

The following layout guidelines should be taken into account in application design.

- Maximize the distance among GNSS antenna, main antenna and Rx-diversity antenna.
- Digital circuits such as (U)SIM card, USB interface, camera module, display connector and eMMC should be kept away from the antennas.
- Use ground vias around the GNSS trace and sensitive analog signal traces to provide coplanar isolation and protection.
- Control the characteristic impedance for ANT_GNSS trace as 50Ω.

Please refer to ***Chapter 5*** for GNSS antenna reference design and antenna installation information.

5 Antenna Interfaces

AG35-Quecopen include a main antenna interface, an Rx-diversity antenna interface which is used to resist the fall of signals caused by high speed movement and multipath effect, and a GNSS antenna interface. The antenna ports have an impedance of 50Ω.

5.1. Main/Rx-diversity Antenna Interface

5.1.1. Pin Definition

The pin definition of main antenna and Rx-diversity antenna interfaces are shown below.

Table 42: Pin Definition of the RF Antenna Interfaces

Pin Name	Pin No.	I/O	Description	Comment
ANT_MAIN	107	IO	Main antenna interface	50Ω impedance
ANT_DIV	127	AI	Receive diversity antenna interface	50Ω impedance

5.1.2. Operating Frequency

Table 43: AG35-CE Operating Frequencies

3GPP Band	Transmit	Receive	Unit
EGSM900	880~915	925~960	MHz
DCS1800	1710~1785	1805~1880	MHz
WCDMA B1	1920~1980	2110~2170	MHz
WCDMA B8	880~915	925~960	MHz
EVDO/CDMA BC0 [1)]	824~849	869~894	MHz
TD-SCDMA B34	2010~2025	2010~2025	MHz

TD-SCDMA B39	1880~1920	1880~1920	MHz
LTE-FDD B1	1920~1980	2110~2170	MHz
LTE-FDD B3	1710~1785	1805~1880	MHz
LTE-FDD B5	824~849	869~894	MHz
LTE-FDD B8	880~915	925~960	MHz
LTE-TDD B34	2010~2025	2010~2025	MHz
LTE-TDD B38	2570~2620	2570~2620	MHz
LTE-TDD B39	1880~1920	1880~1920	MHz
LTE-TDD B40	2300~2400	2300~2400	MHz
LTE-TDD B41	2555~2655	2555~2655	MHz

Table 44: AG35-E Operating Frequencies

3GPP Band	Transmit	Receive	Unit
EGSM900	880~915	925~960	MHz
DCS1800	1710~1785	1805~1880	MHz
WCDMA B1	1920~1980	2110~2170	MHz
WCDMA B5	824~849	869~894	MHz
WCDMA B8	880~915	925~960	MHz
LTE-FDD B1	1920~1980	2110~2170	MHz
LTE-FDD B3	1710~1785	1805~1880	MHz
LTE-FDD B5	824~849	869~894	MHz
LTE-FDD B7	2500~2570	2620~2690	MHz
LTE-FDD B8	880~915	925~960	MHz
LTE-FDD B20	832~862	791~821	MHz
LTE FDD B28	703~748	758~803	MHz

LTE-TDD B38	2570~2620	2570~2620	MHz
LTE-TDD B40	2300~2400	2300~2400	MHz

Table 45: AG35-NA Operating Frequencies

3GPP Band	Transmit	Receive	Unit
GSM850	824~849	869~894	MHz
PCS1900	1850~1910	1930~1990	MHz
WCDMA B2	1850~1910	1930~1990	MHz
WCDMA B4	1710~1755	2110~2155	MHz
WCDMA B5	824~849	869~894	MHz
LTE-FDD B2	1850~1910	1930~1990	MHz
LTE-FDD B4	1710~1755	2110~2155	MHz
LTE-FDD B5	824~849	869~894	MHz
LTE-FDD B7	2500~2570	2620~2690	MHz
LTE-FDD B12	699~716	729~746	MHz
LTE-FDD B13	777~787	746~756	MHz
LTE-FDD B17	704~716	734~746	MHz

Table 46: AG35-LA Operating Frequencies

3GPP Band	Transmit	Receive	Unit
GSM850	824~849	869~894	MHz
EGSM900	880~915	925~960	MHz
DCS1800	1710~1785	1805~1880	MHz
PCS1900	1850~1910	1930~1990	MHz
WCDMA B1	1920~1980	2110~2170	MHz

WCDMA B2	1850~1910	1930~1990	MHz
WCDMA B3	1710~1785	1805~1880	MHz
WCDMA B4	1710~1755	2110~2155	MHz
WCDMA B5	824~849	869~894	MHz
WCDMA B8	880~915	925~960	MHz
LTE-FDD B1	1920~1980	2110~2170	MHz
LTE-FDD B2	1850~1910	1930~1990	MHz
LTE-FDD B3	1710~1785	1805~1880	MHz
LTE-FDD B4	1710~1755	2110~2155	MHz
LTE-FDD B5	824~849	869~894	MHz
LTE-FDD B7	2500~2570	2620~2690	MHz
LTE-FDD B8	880~915	925~960	MHz
LTE FDD B28	703~748	758~803	MHz

Table 47: AG35-J Operating Frequencies

3GPP Band	Transmit	Receive	Unit
WCDMA B1	1920~1980	2110~2170	MHz
WCDMA B3	1710~1785	1805~1880	MHz
WCDMA B5	824~849	869~894	MHz
WCDMA B6	830~840	875~885	MHz
WCDMA B8	880~915	925~960	MHz
WCDMA B19	830~845	875~890	MHz
LTE-FDD B1	1920~1980	2110~2170	MHz
LTE-FDD B3	1710~1785	1805~1880	MHz
LTE-FDD B5	824~849	869~894	MHz

LTE-FDD B8	880~915	925~960	MHz
LTE-FDD B9	1749.9~1784.8	1844.9~1879.8	MHz
LTE-FDD B19	830~845	875~890	MHz
LTE-FDD B21	1747.9~1462.8	1495.9~1510.8	MHz
LTE FDD B28	703~748	758~803	MHz
LTE TDD B41	2535~2655	2535~2655	MHz

NOTE

[1] EVDO/CDMA BC0 for AG35-CE and LTE-FDD B28 for AG35-NA are optional.

5.1.3. Reference Design of RF Antenna Interface

A reference design of main and Rx-diversity antenna interfaces is shown as below. It is recommended to reserve a π-type matching circuit for better RF performance, and the π-type matching components (R1/C1/C2 and R2/C3/C4) should be placed as close to the antennas as possible. The capacitors are not mounted by default.

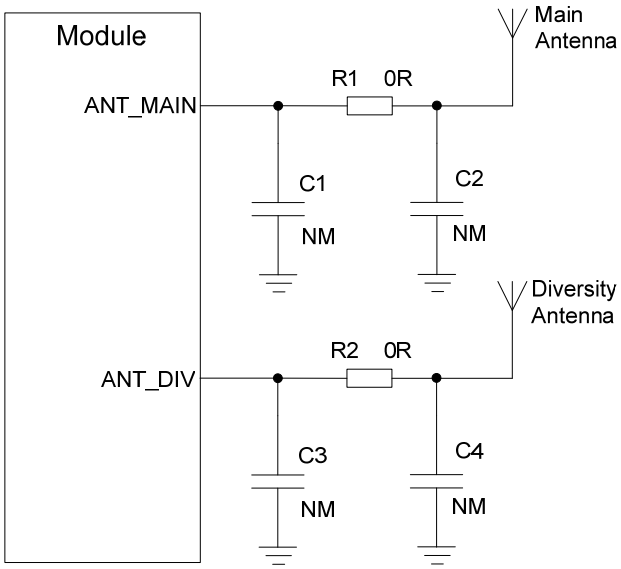

Figure 36: Reference Circuit of RF Antenna Interfaces

NOTES

1. Keep a proper distance between the main antenna and the Rx-diversity antenna to improve receiving sensitivity.
2. ANT_DIV function is enabled by default. **AT+QCFG="diversity",0** command can be used to disable receive diversity. Please refer to ***document [2]*** for details.

5.1.4. Reference Design of RF Layout

For user's PCB, the characteristic impedance of all RF traces should be controlled to 50Ω. The impedance of the RF traces is usually determined by the trace width (W), the materials' dielectric constant, height from the reference ground to the signal layer (H), and the clearance between RF traces and grounds (S). Microstrip or coplanar waveguide is typically used in RF layout to control characteristic impedance. The following are reference designs of microstrip or coplanar waveguide with different PCB structures.

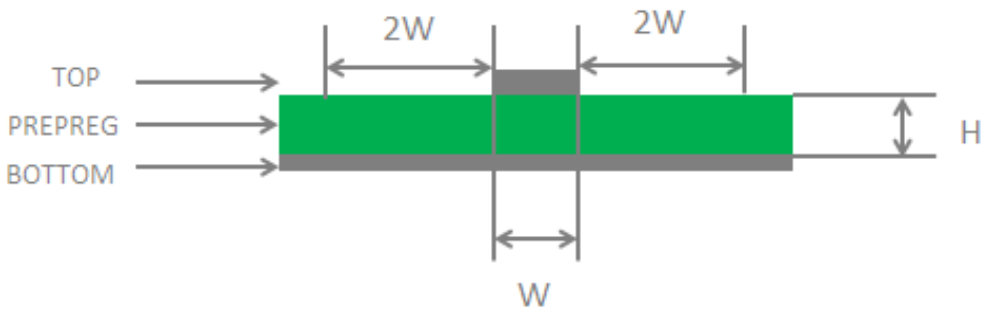

Figure 37: Microstrip Design on a 2-layer PCB

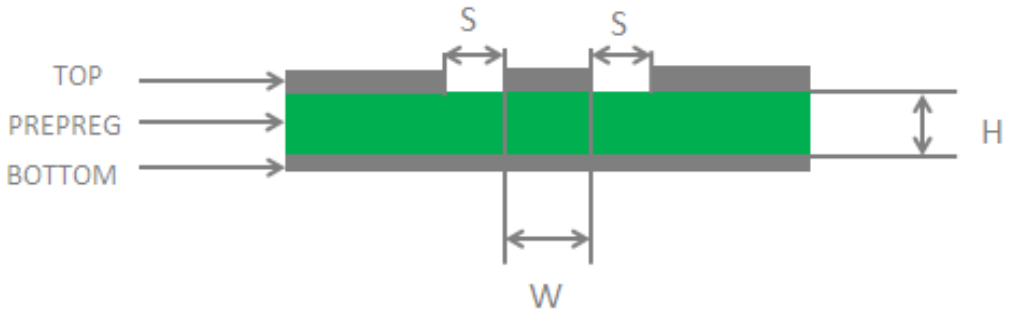

Figure 38: Coplanar Waveguide Design on a 2-layer PCB

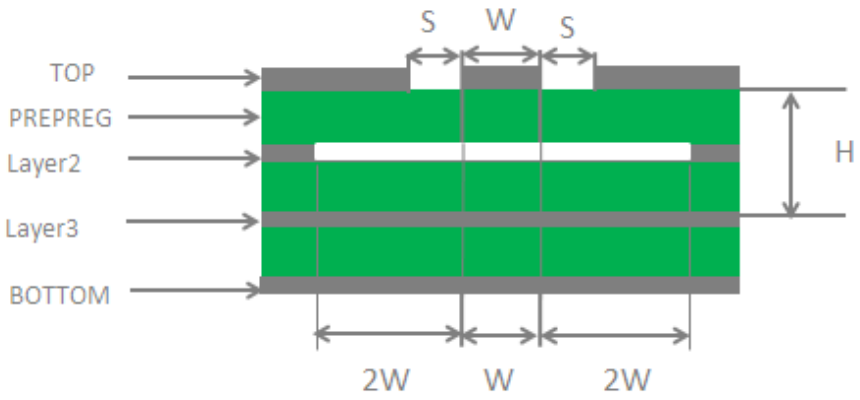

Figure 39: Coplanar Waveguide Design on a 4-layer PCB (Layer 3 as Reference Ground)

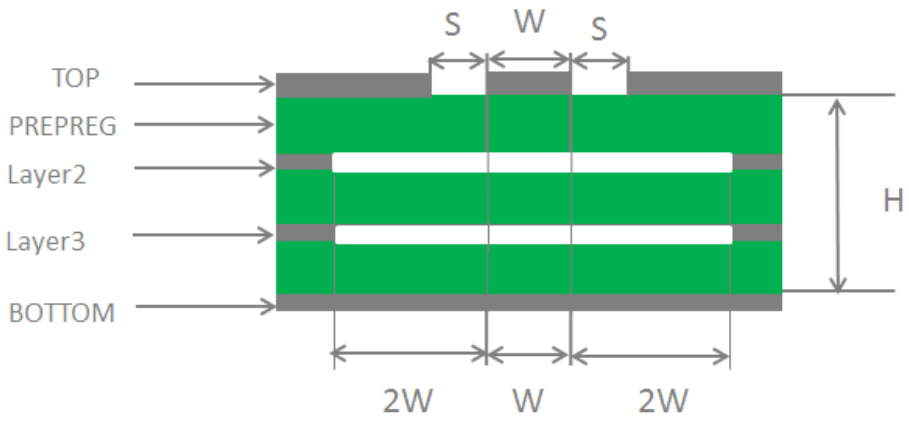

Figure 40: Coplanar Waveguide Design on a 4-layer PCB (Layer 4 as Reference Ground)

In order to ensure RF performance and reliability, the following principles should be complied with in RF layout design:

- Use an impedance simulation tool to accurately control the characteristic impedance of RF traces to 50Ω.
- The GND pins adjacent to RF pins should not be designed as thermal relief pads, and should be fully connected to ground.
- The distance between the RF pins and the RF connector should be as short as possible, and all the right-angle traces should be changed to curved ones.
- There should be clearance under the signal pin of the antenna connector or solder joint.
- The reference ground of RF traces should be complete. Meanwhile, adding some ground vias around RF traces and the reference ground could help to improve RF performance. The distance between the ground vias and RF traces should be no less than two times as wide as RF signal traces (2*W).

For more details about RF layout, please refer to ***document [6]***.

5.2. GNSS Antenna Interface

The following tables show the pin definition and frequency specification of GNSS antenna interface.

Table 48: Pin Definition of GNSS Antenna Interface

Pin Name	Pin No.	I/O	Description	Comment
ANT_GNSS	119	AI	GNSS antenna interface	50Ω impedance

Table 49: GNSS Frequency

Type	Frequency	Unit
GPS	1575.42±1.023	MHz
GLONASS	1597.5~1605.8	MHz
Galileo	1575.42±2.046	MHz
BeiDou	1561.098±2.046	MHz
QZSS	1575.42	MHz

A reference design of GNSS antenna is shown as below.

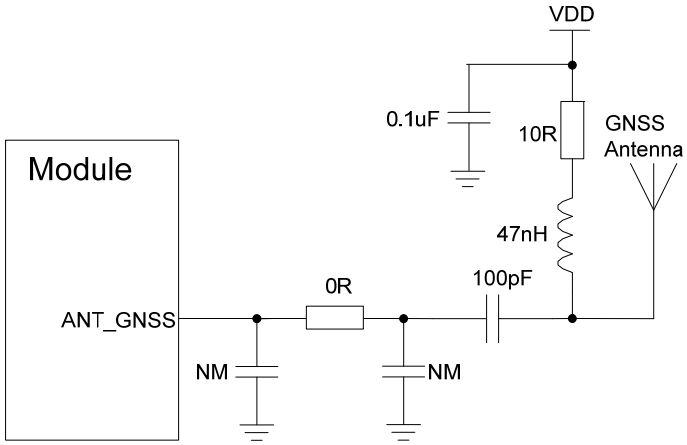

Figure 41: Reference Circuit of GNSS Antenna

NOTES

1. An external LDO can be selected to supply power according to the active antenna requirement.
2. If the module is designed with a passive antenna, then the VDD circuit is not needed.

5.3. Antenna Installation

5.3.1. Antenna Requirements

The following table shows the requirements on main antenna, Rx-diversity antenna and GNSS antenna.

Table 50: Antenna Requirements

Type	Requirements
GNSS [1)]	Frequency range: 1559MHz~1609MHz Polarization: RHCP or linear VSWR: < 2 (Typ.) Passive antenna gain: > 0dBi Active antenna noise figure: < 1.5dB Active antenna gain: > 0dBi Active antenna embedded LNA gain: < 17dB
GSM/EVDO/CDMA/UMTS/ TD-SCDMA/LTE	VSWR: ≤ 2 Efficiency: > 30% Max input power: 50W Input impedance: 50Ω Cable insertion loss: < 1dB (GSM850/EGSM900, WCDMA B5/B6/B8/B19, LTE-FDD B5/B8/B12/B13/B17/B19/B20/B28, EVDO/CDMA BC0) Cable insertion loss: < 1.5dB (DCS1800/PCS900, WCDMA B1/B2/B3/B4, LTE-FDD B1/B2/B3/B4/B9/B11/B21, LTE-TDD B34/B39, TD-SCDMA B34/B39) Cable insertion loss: < 2dB (LTE-FDD B7, LTE-TDD B38/B40/B41)

NOTE

[1)] It is recommended to use a passive GNSS antenna when LTE B13 or B14 is supported, as the use of active antenna may generate harmonics which will affect the GNSS performance.

5.3.2. Recommended RF Connector for Antenna Installation

If RF connector is used for antenna connection, it is recommended to use the U.FL-R-SMT connector provided by *HIROSE*.

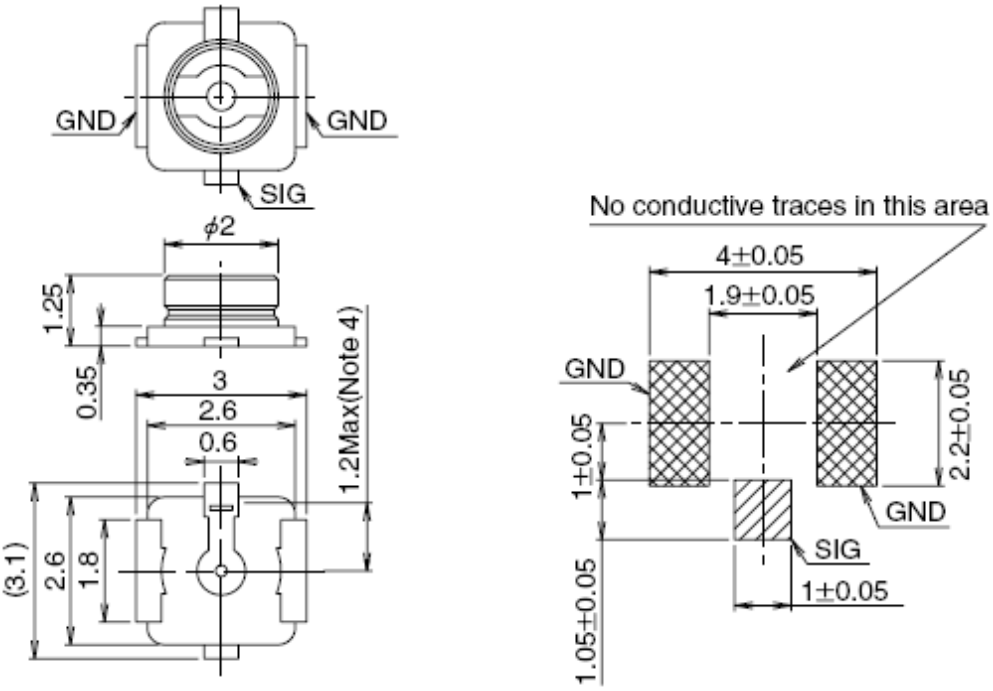

Figure 42: Dimensions of the U.FL-R-SMT Connector (Unit: mm)

U.FL-LP serial connector listed in the following figure can be used to match the U.FL-R-SMT.

	U.FL-LP-040	U.FL-LP-066	U.FL-LP(V)-040	U.FL-LP-062	U.FL-LP-088
Part No.	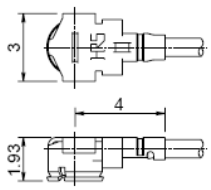	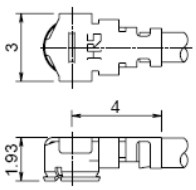	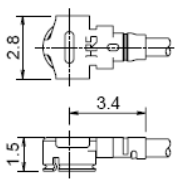	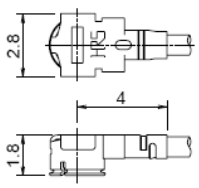	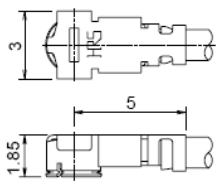
Mated Height	2.5mm Max. (2.4mm Nom.)	2.5mm Max. (2.4mm Nom.)	2.0mm Max. (1.9mm Nom.)	2.4mm Max. (2.3mm Nom.)	2.4mm Max. (2.3mm Nom.)
Applicable cable	Dia. 0.81mm Coaxial cable	Dia. 1.13mm and Dia. 1.32mm Coaxial cable	Dia. 0.81mm Coaxial cable	Dia. 1mm Coaxial cable	Dia. 1.37mm Coaxial cable
Weight (mg)	53.7	59.1	34.8	45.5	71.7
RoHS	YES				

Figure 43: Mechanicals of U.FL-LP Connectors

The following figure describes the space factor of mated connector.

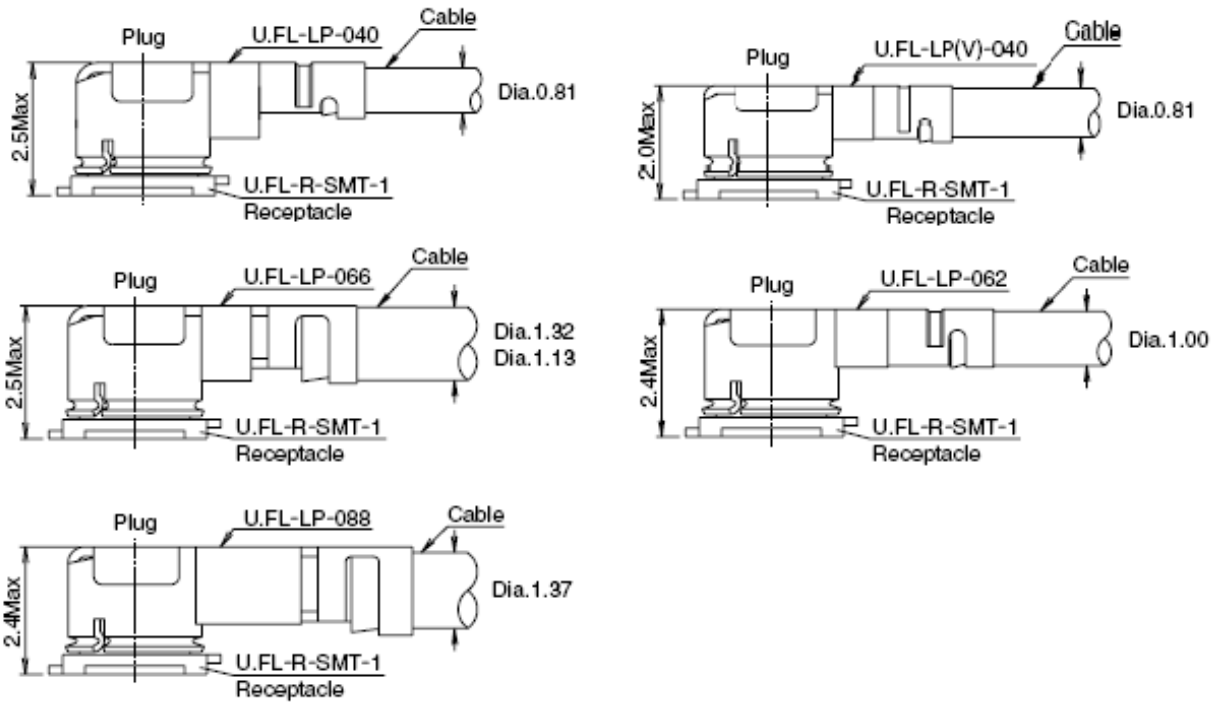

Figure 44: Space Factor of Mated Connector (Unit: mm)

For more details, please visit https://www.hirose.com.

6 Electrical, Reliability and Radio Characteristics

6.1. Absolute Maximum Ratings

Absolute maximum ratings for power supply and voltage on digital and analog pins of the module are listed in the following table.

Table 51: Absolute Maximum Ratings

Parameter	Min.	Max.	Unit
VBAT_RF/VBAT_BB	-0.3	4.7	V
USB_VBUS	-0.3	5.5	V
Peak Current of VBAT_BB	0	0.8	A
Peak Current of VBAT_RF	0	1.8	A
Voltage at Digital Pins	-0.3	2.3	V
Voltage at ADC0	0.3	VBAT_BB	V
Voltage at ADC1	0.3	VBAT_BB	V
Voltage at ADC2	0.1	1.7	V

6.2. Power Supply Ratings

Table 52: Power Supply Ratings

Parameter	Description	Conditions	Min.	Typ.	Max.	Unit
VBAT	VBAT_BB and VBAT_RF	The actual input voltages must stay between the minimum and maximum values.	3.3	3.8	4.3	V
	Voltage drop during burst transmission	Maximum power control level on EGSM900.			400	mV
I_{VBAT}	Peak supply current (during transmission slot)	Maximum power control level on EGSM900.		1.8	2.0	A
USB_VBUS	USB connection detection		3.0	5.0	5.25	V

6.3. Operation and Storage Temperatures

Table 53: Operation and Storage Temperatures

Parameter	Min.	Typ.	Max.	Unit
Operation Temperature Range [1)]	-35	+25	+75	ºC
Extended Temperature Range [2)]	-40		+85	ºC
eCall Temperature Range [3)]	-40		+90	ºC
Storage Temperature Range	-40		+95	ºC

NOTES

1. [1)] Within operation temperature range, the module is 3GPP compliant, and emergency call can be dialed out with a maximum power and data rate.
2. [2)] Within extended temperature range, the module remains fully functional and retains the ability to establish and maintain a voice, SMS, data transmission, emergency call, etc. There is no unrecoverable malfunction. There are also no effects on radio spectrum and no harm to radio network. Only one or more parameters like P_{out} might reduce in their value and exceed the specified

tolerances. When the temperature returns to normal operation temperature levels, the module will meet 3GPP specifications again.

3. [3] Within eCall temperature range, the emergency call function must be functional until the module is broken. When the ambient temperature is between 75°C and 90°C and the module temperature has reached the threshold value, the module will trigger protective measures (such as reduce power, decrease throughput, unregister the device, etc.) to ensure the full function of emergency call.

6.4. Current Consumption

Table 54: AG35-CE Current Consumption (25°C, 3.8V Power Supply)

Parameter	Description	Conditions	Typ.	Unit
I_{VBAT}	OFF state	Power down	20	uA
	Sleep state	**AT+CFUN=0** (USB disconnected)	1.2	mA
		GSM DRX=2 (USB disconnected)	2.3	mA
		GSM DRX=9 (USB disconnected)	1.8	mA
		WCDMA PF=128 (USB disconnected)	1.8	mA
		WCDMA PF=512 (USB disconnected)	1.5	mA
		LTE-FDD PF=128 (USB disconnected)	2.1	mA
		LTE-FDD PF=256 (USB disconnected)	1.7	mA
		LTE-TDD PF=128 (USB disconnected)	2.2	mA
		LTE-TDD PF=256 (USB disconnected)	1.7	mA
	Idle state	GSM DRX=5 (USB connected)	20	mA
		GSM DRX=5 (USB disconnected)	34.0	mA
		WCDMA PF=64 (USB connected)	35.0	mA
		WCDMA PF=64 (USB disconnected)	22.0	mA
		LTE-FDD PF=64 (USB connected)	35.0	mA
		LTE-FDD PF=64 (USB disconnected)	22.0	mA

	LTE-TDD PF=64 (USB connected)	35.0	mA
	LTE-TDD PF=64 (USB disconnected)	23.0	mA
GPRS data transfer (GNSS OFF)	EGSM900 4DL/1UL @32.66dBm	249.2	mA
	EGSM900 3DL/2UL @32.51dBm	421.6	mA
	EGSM900 2DL/3UL @30.65dBm	495.0	mA
	EGSM900 1DL/4UL @29.37dBm	568.9	mA
	DCS1800 4DL/1UL @29.21dBm	174.1	mA
	DCS1800 3DL/2UL @29.03dBm	276.1	mA
	DCS1800 2DL/3UL @28.95dBm	374.9	mA
	DCS1800 1DL/4UL @28.81dBm	476.8	mA
EDGE data transfer (GNSS OFF)	EGSM900 4DL/1UL @27.02dBm	155.2	mA
	EGSM900 3DL/2UL @27.05dBm	256.9	mA
	EGSM900 2DL/3UL @26.82dBm	350.0	mA
	EGSM900 1DL/4UL @26.69dBm	446.0	mA
	DCS1800 4DL/1UL @25.21dBm	146.0	mA
	DCS1800 3DL/2UL @25.11dBm	226.7	mA
	DCS1800 2DL/3UL @25.01dBm	312.0	mA
	DCS1800 1DL/4UL @24.84dBm	401.6	mA
EVDO/CDMA data transfer (GNSS OFF)	BC0 [1] @23.71dBm	609.06	mA
TD-SCDMA data transfer (GNSS OFF)	B34 @22.73dBm	131.51	mA
	B39 @22.94dBm	132.77	mA
WCDMA data transfer (GNSS OFF)	WCDMA B1 HSDPA @21.95dBm	540.18	mA
	WCDMA B8 HSDPA @22.32dBm	481.27	mA
	WCDMA B1 HSUPA @21.52dBm	532.06	mA
	WCDMA B8 HSUPA @21.49dBm	466.51	mA

	LTE data transfer (GNSS OFF)	LTE-FDD B1 @23.01dBm	698.07	mA
		LTE-FDD B3 @23.24dBm	708.78	mA
		LTE-FDD B5 @23.28dBm	629.16	mA
		LTE-FDD B8 @23.27dBm	597.21	mA
		LTE-TDD B34 @22.73dBm	334.99	mA
		LTE-TDD B38 @22.85dBm	430.39	mA
		LTE-TDD B39 @22.97dBm	330.62	mA
		LTE-TDD B40 @22.94dBm	405.78	mA
		LTE-TDD B41 @22.91dBm	456.63	mA
	GSM voice call	EGSM900, PCL=5 @32.3dBm	230.4	mA
		EGSM900, PCL=12 @19.3dBm	103.2	mA
		EGSM900, PCL=19 @5.3dBm	73.0	mA
		DCS1800, PCL=0 @29.26dBm	155.5	mA
		DCS1800, PCL=7 @16.52dBm	117.3	mA
		DCS1800, PCL=15 @0.3dBm	97	mA
	EVDO/CDMA voice call	BC0 [1] @23.78dBm	592.7	mA
		BC0 [1] @-60.55dBm	112.7	mA
	WCDMA voice call	WCDMA B1 @23.15dBm	502.2	mA
		WCDMA B8 @23.24dBm	525.6	mA

Table 55: AG35-E Current Consumption

Parameter	Description	Conditions	Typ.	Unit
I_{VBAT}	OFF state	Power down	20	uA
	Sleep state	**AT+CFUN=0** (USB disconnected)	1.2	mA
		GSM DRX=2 (USB disconnected)	2.3	mA

		GSM DRX=9 (USB disconnected)	1.6	mA
		WCDMA PF=128 (USB disconnected)	1.8	mA
		WCDMA PF=512 (USB disconnected)	1.5	mA
		LTE-FDD PF=128 (USB disconnected)	2.1	mA
		LTE-FDD PF=256 (USB disconnected)	1.8	mA
		LTE-TDD PF=128 (USB disconnected)	2.0	mA
		LTE-TDD PF=256 (USB disconnected)	1.7	mA
	Idle state	GSM DRX=5 (USB connected)	17.5	mA
		GSM DRX=5(USB disconnected)	29	mA
		WCDMA PF=64 (USB connected)	29	mA
		WCDMA PF=64 (USB disconnected)	17	mA
		LTE-FDD PF=64 (USB connected)	28	mA
		LTE-FDD PF=64 (USB disconnected)	18	mA
		LTE-TDD PF=64 (USB connected)	29.5	mA
		LTE-TDD PF=64 (USB disconnected)	17.5	mA
	GPRS data transfer (GNSS OFF)	EGSM900 4DL/1UL @33.02dBm	235	mA
		EGSM900 3DL/2UL @32.85dBm	405	mA
		EGSM900 2DL/3UL @30.4dBm	445	mA
		EGSM900 1DL/4UL @29.2dBm	515	mA
		DCS1800 4DL/1UL @29.7dBm	175	mA
		DCS1800 3DL/2UL @29.6dBm	275	mA
		DCS1800 2DL/3UL @29dBm	370	mA
		DCS1800 1DL/4UL @28dBm	440	mA
	EDGE data transfer (GNSS OFF)	EGSM900 4DL/1UL @27.5dBm	158	mA
		EGSM900 3DL/2UL @27.5dBm	251	mA

		EGSM900 2DL/3UL @26.9dBm	331	mA
		EGSM900 1DL/4UL @25.3dBm	385	mA
		DCS1800 4DL/1UL @26.2dBm	150	mA
		DCS1800 3DL/2UL @26dBm	232	mA
		DCS1800 2DL/3UL @25dBm	307	mA
		DCS1800 1DL/4UL @24.6dBm	386	mA
	WCDMA data transfer (GNSS OFF)	WCDMA B1 HSDPA @22.2dBm	552	mA
		WCDMA B5 HSDPA @22.8dBm	435	mA
		WCDMA B8 HSDPA @22.2dBm	495	mA
		WCDMA B1 HSUPA @21.9dBm	569	mA
		WCDMA B5 HSUPA @22.2dBm	432	mA
		WCDMA B8 HSUPA @22dBm	512	mA
	LTE data transfer (GNSS OFF)	LTE-FDD B1 @23.5dBm	730	mA
		LTE-FDD B3 @23.8dBm	750	mA
		LTE-FDD B5 @23.18dBm	530	mA
		LTE-FDD B7 @23.7dBm	710	mA
		LTE-FDD B8 @23.6dBm	600	mA
		LTE-FDD B20 @23.8dBm	600	mA
		LTE-FDD B28A @23.3dBm	780	mA
		LTE-FDD B28B @23.5dBm	700	mA
		LTE-TDD B38 @23.3dBm	385	mA
		LTE-TDD B40 @22.95dBm	370	mA
	GSM voice call	EGSM900 @PCL=5	246	mA
		EGSM900 @PCL=12	116	mA
		EGSM900 @PCL=19	88	mA

		DCS1800 @PCL=0	177	mA
		DCS1800 @PCL=7	128	mA
		DCS1800 @PCL=15	109	mA
	WCDMA voice call	WCDMA B1 (max power) @23.07dBm	640	mA
		WCDMA B5 (max power) @23.24dBm	450	mA
		WCDMA B8 (max power) @23.1dBm	550	mA

Table 56: AG35-NA Current Consumption

Parameter	Description	Conditions	Typ.	Unit
I_{VBAT}	OFF state	Power down	20	uA
	Sleep state	**AT+CFUN=0** (USB disconnected)	1.2	mA
		GSM DRX=2 (USB disconnected)	2.3	mA
		GSM DRX=9 (USB disconnected)	1.7	mA
		WCDMA PF=128 (USB disconnected)	1.8	mA
		WCDMA PF=512 (USB disconnected)	1.5	mA
		LTE-FDD PF=128 (USB disconnected)	2.0	mA
		LTE-FDD PF=256 (USB disconnected)	1.7	mA
	Idle state	WCDMA PF=64 (USB connected)	31.0	mA
		WCDMA PF=64 (USB disconnected)	19.0	mA
		LTE-FDD PF=64 (USB connected)	31.0	mA
		LTE-FDD PF=64 (USB disconnected)	19.0	mA
	GPRS data transfer (GNSS OFF)	GSM850 4DL/1UL @32.66dBm	256	mA
		GSM850 3DL/2UL @32.51dBm	425	mA
		GSM850 2DL/3UL @30.65dBm	510	mA
		GSM850 1DL/4UL @29.37dBm	580	mA

	PCS1900 4DL/1UL @29.21dBm	185	mA
	PCS1900 3DL/2UL @29.03dBm	296	mA
	PCS1900 2DL/3UL @28.95dBm	390	mA
	PCS1900 1DL/4UL @28.81dBm	480	mA
EDGE data transfer (GNSS OFF)	GSM850 4DL/1UL @27.02dBm	160	mA
	GSM850 3DL/2UL @27.05dBm	265	mA
	GSM850 2DL/3UL @26.82dBm	355	mA
	GSM850 1DL/4UL @26.69dBm	456	mA
	PCS1900 4DL/1UL @25.21dBm	155	mA
	PCS1900 3DL/2UL @25.11dBm	230	mA
	PCS1900 2DL/3UL @25.01dBm	320	mA
	PCS1900 1DL/4UL @24.84dBm	410	mA
WCDMA data transfer (GNSS OFF)	WCDMA B2 HSDPA (max power) @22.32dBm	560	mA
	WCDMA B4 HSDPA (max power) @22.32dBm	570	mA
	WCDMA B5 HSDPA (max power) @22.48dBm	560	mA
	WCDMA B2 HSUPA (max power) @22.09dBm	520	mA
	WCDMA B4 HSUPA (max power) @22.32dBm	560	mA
	WCDMA B5 HSUPA (max power) @22.28dBm	550	mA
LTE data transfer (GNSS OFF)	LTE-FDD B2 (max power) @22.85dBm	650	mA
	LTE-FDD B4 (max power) @23.08dBm	640	mA
	LTE-FDD B5 (max power) @23.18dBm	650	mA
	LTE-FDD B7 (max power) @23dBm	710	mA
	LTE-FDD B12 (max power) @23dBm	660	mA
	LTE-FDD B13 (max power) @23.19dBm	650	mA

		LTE-FDD B17(max power) @23.2dBm	670	mA
		LTE-FDD B28A [1)] (max power) @23.2dBm	240	mA
		LTE-FDD B28B [1)] (max power) @23.2dBm	105	mA
	GSM voice call	GSM850 @PCL=5	80	mA
		GSM850 @PCL=12	190	mA
		GSM850 @PCL=19	110	mA
		PCS1900 @PCL=0	90	mA
		PCS1900 @PCL=7	590	mA
		PCS1900 @PCL=15	595	mA
	WCDMA voice call	WCDMA B2 (max power) @22.96dBm	580	mA
		WCDMA B4 (max power) @22.96dBm	560	mA
		WCDMA B5 (max power) @23.15dBm	570	mA

Table 57: AG35-LA Current Consumption

Parameter	Description	Conditions	Typ.	Unit
I_{VBAT}	OFF state	Power down	TBD	uA
	Sleep state	**AT+CFUN=0** (USB disconnected)	TBD	mA
		GSM DRX=2 (USB disconnected)	TBD	mA
		GSM DRX=9 (USB disconnected)	TBD	mA
		WCDMA PF=128 (USB disconnected)	TBD	mA
		WCDMA PF=512 (USB disconnected)	TBD	mA
		LTE-FDD PF=128 (USB disconnected)	TBD	mA
		LTE-FDD PF=256 (USB disconnected)	TBD	mA
	Idle state	GSM DRX=5 (USB connected)	TBD	mA
		GSM DRX=5 (USB disconnected)	TBD	mA

		WCDMA PF=64 (USB connected)	TBD	mA
		WCDMA PF=64 (USB disconnected)	TBD	mA
		LTE-FDD PF=64 (USB connected)	TBD	mA
		LTE-FDD PF=64 (USB disconnected)	TBD	mA
	GPRS data transfer (GNSS OFF)	GSM850 4DL/1UL @32.66dBm	TBD	mA
		GSM850 3DL/2UL @32.51dBm	TBD	mA
		GSM850 2DL/3UL @30.65dBm	TBD	mA
		GSM850 1DL/4UL @29.37dBm	TBD	mA
		EGSM900 4DL/1UL @32.66dBm	TBD	mA
		EGSM900 3DL/2UL @32.51dBm	TBD	mA
		EGSM900 2DL/3UL @30.65dBm	TBD	mA
		EGSM900 1DL/4UL @29.37dBm	TBD	mA
		DCS1800 4DL/1UL @29.21dBm	TBD	mA
		DCS1800 3DL/2UL @29.03dBm	TBD	mA
		DCS1800 2DL/3UL @28.95dBm	TBD	mA
		DCS1800 1DL/4UL @28.81dBm	TBD	mA
		PCS1900 4DL/1UL @29.21dBm	TBD	mA
		PCS1900 3DL/2UL @29.03dBm	TBD	mA
		PCS1900 2DL/3UL @28.95dBm	TBD	mA
		PCS1900 1DL/4UL @28.81dBm	TBD	mA
	EDGE data transfer (GNSS OFF)	GSM850 4DL/1UL @27.02dBm	TBD	mA
		GSM850 3DL/2UL @27.05dBm	TBD	mA
		GSM850 2DL/3UL @26.82dBm	TBD	mA
		GSM850 1DL/4UL @26.69dBm	TBD	mA
		EGSM900 4DL/1UL @27.02dBm	TBD	mA

	EGSM900 3DL/2UL @27.05dBm	TBD	mA
	EGSM900 2DL/3UL @26.82dBm	TBD	mA
	EGSM900 1DL/4UL @26.69dBm	TBD	mA
	DCS1800 4DL/1UL @25.21dBm	TBD	mA
	DCS1800 3DL/2UL @25.11dBm	TBD	mA
	DCS1800 2DL/3UL @25.01dBm	TBD	mA
	DCS1800 1DL/4UL @24.84dBm	TBD	mA
	PCS1900 4DL/1UL @25.21dBm	TBD	mA
	PCS1900 3DL/2UL @25.11dBm	TBD	mA
	PCS1900 2DL/3UL @25.01dBm	TBD	mA
	PCS1900 1DL/4UL @24.84dBm	TBD	mA
WCDMA data transfer (GNSS OFF)	WCDMA B1 HSDPA @22.32dBm	TBD	mA
	WCDMA B2 HSDPA @22.32dBm	TBD	mA
	WCDMA B3 HSDPA @22.32dBm	TBD	mA
	WCDMA B4 HSDPA @22.32dBm	TBD	mA
	WCDMA B5 HSDPA @22.32dBm	TBD	mA
	WCDMA B8 HSDPA @22.48dBm	TBD	mA
	WCDMA B1 HSUPA @22.09dBm	TBD	mA
	WCDMA B2 HSUPA @22.09dBm	TBD	mA
	WCDMA B3 HSUPA @22.09dBm	TBD	mA
	WCDMA B4 HSUPA @22.09dBm	TBD	mA
	WCDMA B5 HSUPA @22.32dBm	TBD	mA
	WCDMA B8 HSUPA @22.28dBm	TBD	mA
LTE data transfer (GNSS OFF)	LTE-FDD B1 @22.85dBm	TBD	mA
	LTE-FDD B2 @23.08dBm	TBD	mA

		LTE-FDD B3 @23.08dBm	TBD	mA
		LTE-FDD B4 @23.08dBm	TBD	mA
		LTE-FDD B5 @23.18dBm	TBD	mA
		LTE-FDD B7 @23dBm	TBD	mA
		LTE-FDD B8 @23.19dBm	TBD	mA
		LTE-FDD B28A @23dBm	TBD	mA
		LTE-FDD B28B @23dBm	TBD	mA
	GSM voice call	GSM850 @PCL=5	TBD	mA
		GSM850 @PCL=12	TBD	mA
		GSM850 @PCL=19	TBD	mA
		EGSM900 @PCL=5	TBD	mA
		EGSM900 @PCL=12	TBD	mA
		EGSM900 @PCL=19	TBD	mA
		DCS1800 @PCL=0	TBD	mA
		DCS1800 @PCL=7	TBD	mA
		DCS1800 @PCL=15	TBD	mA
		PCS1900 @PCL=0	TBD	mA
		PCS1900 @PCL=7	TBD	mA
		PCS1900 @PCL=15	TBD	mA
	WCDMA voice call	WCDMA B1 (max power) @22.96dBm	TBD	mA
		WCDMA B2 (max power) @22.96dBm	TBD	mA
		WCDMA B3 (max power) @22.96dBm	TBD	mA
		WCDMA B4 (max power) @22.96dBm	TBD	mA
		WCDMA B5 (max power) @22.96dBm	TBD	mA
		WCDMA B8 (max power) @23.15dBm	TBD	mA

Table 58: AG35-J Current Consumption

Parameter	Description	Conditions	Typ.	Unit
I_{VBAT}	OFF state	Power down	TBD	uA
	Sleep state	**AT+CFUN=0** (USB disconnected)	TBD	mA
		WCDMA PF=128 (USB disconnected)	TBD	mA
		WCDMA PF=512 (USB disconnected)	TBD	mA
		LTE-FDD PF=128 (USB disconnected)	TBD	mA
		LTE-FDD PF=256 (USB disconnected)	TBD	mA
		LTE-TDD PF=128 (USB disconnected)	TBD	mA
		LTE-TDD PF=256 (USB disconnected)	TBD	mA
	Idle state	WCDMA PF=64 (USB connected)	TBD	mA
		WCDMA PF=64 (USB disconnected)	TBD	mA
		LTE-FDD PF=64 (USB connected)	TBD	mA
		LTE-FDD PF=64 (USB disconnected)	TBD	mA
		LTE-TDD PF=64 (USB connected)	TBD	mA
		LTE-TDD PF=64 (USB disconnected)	TBD	mA
	WCDMA data transfer (GNSS OFF)	WCDMA B1 HSDPA @22.32dBm	550	mA
		WCDMA B3 HSDPA @22.32dBm	590	mA
		WCDMA B5 HSDPA @22.32dBm	530	mA
		WCDMA B6 HSDPA @22.32dBm	536	mA
		WCDMA B8 HSDPA @22.48dBm	580	mA
		WCDMA B19 HSDPA @22.32dBm	550	mA
		WCDMA B1 HSUPA @22.09dBm	565	mA
		WCDMA B3 HSUPA @22.09dBm	596	mA
		WCDMA B5 HSUPA @22.32dBm	550	mA

		WCDMA B6 HSUPA @22.28dBm	545	mA
		WCDMA B8 HSUPA @22.28dBm	578	mA
		WCDMA B19 HSUPA @22.28dBm	565	mA
	LTE data transfer (GNSS OFF)	LTE-FDD B1 @22.85dBm	660	mA
		LTE-FDD B3 @23.08dBm	680	mA
		LTE-FDD B5 @23.08dBm	670	mA
		LTE-FDD B8 @23.18dBm	630	mA
		LTE-FDD B9 @23dBm	629	mA
		LTE-FDD B19 @23.19dBm	645	mA
		LTE-FDD B21 @23dBm	600	mA
		LTE-FDD B28 @23dBm	700	mA
		LTE-TDD B41 @23dBm	430	mA
	WCDMA voice call	WCDMA B1 (max power) @22.96dBm	590	mA
		WCDMA B3 (max power) @22.96dBm	630	mA
		WCDMA B5 (max power) @22.96dBm	600	mA
		WCDMA B6 (max power) @22.96dBm	596	mA
		WCDMA B8 (max power) @22.96dBm	598	mA
		WCDMA B19 (max power) @23.15dBm	590	mA

Table 59: AG35-CE GNSS Current Consumption

Parameter	Description	Conditions	Typ.	Unit
I_{VBAT} (GNSS)	Searching (**AT+CFUN=0**)	Cold Start @Passive Antenna	50.5	mA
		Hot Start @Passive Antenna	49.7	mA
		Lost State @Passive Antenna	49.8	mA

	Tracking (**AT+CFUN=0**)	Open Sky @Passive Antenna	28.8	mA

Table 60: AG35-E GNSS Current Consumption

Parameter	Description	Conditions	Typ.	Unit
I_{VBAT} (GNSS)	Searching (**AT+CFUN=0**)	Cold Start @Passive Antenna	48.5	mA
		Hot Start @Passive Antenna	47.3	mA
		Lost State @Passive Antenna	49.1	mA
	Tracking (**AT+CFUN=0**)	Open Sky @Passive Antenna	30.6	mA

Table 61: AG35-NA GNSS Current Consumption

Parameter	Description	Conditions	Typ.	Unit
I_{VBAT} (GNSS)	Searching (**AT+CFUN=0**)	Cold Start @Passive Antenna	50	mA
		Hot Start @Passive Antenna	49	mA
		Lost State @Passive Antenna	50	mA
	Tracking (**AT+CFUN=0**)	Open Sky @Passive Antenna	29	mA

Table 62: AG35-LA GNSS Current Consumption

Parameter	Description	Conditions	Typ.	Unit
I_{VBAT} (GNSS)	Searching (**AT+CFUN=0**)	Cold Start @Passive Antenna	TBD	mA
		Hot Start @Passive Antenna	TBD	mA
		Lost State @Passive Antenna	TBD	mA
	Tracking (**AT+CFUN=0**)	Open Sky @Passive Antenna	TBD	mA

Table 63: AG35-J GNSS Current Consumption

Parameter	Description	Conditions	Typ.	Unit
I_{VBAT} (GNSS)	Searching (**AT+CFUN=0**)	Cold Start @Passive Antenna	TBD	mA
		Hot Start @Passive Antenna	TBD	mA
		Lost State @Passive Antenna	TBD	mA
	Tracking (**AT+CFUN=0**)	Open Sky @Passive Antenna	TBD	mA

NOTE

[1] EVDO/CDMA BC0 for AG35-CE and LTE-FDD B28 for AG35-NA are optional.

6.5. RF Output Power

The following table shows the RF output power of AG35-Quecopen module.

Table 64: AG35-CE RF Output Power

Frequency	Max.	Min.
EGSM900	33dBm±2dB	5dBm±5dB
DCS1800	30dBm±2dB	0dBm±5dB
WCDMA B1	24dBm+1/-3dB	<-49dBm
WCDMA B8	24dBm+1/-3dB	<-49dBm
EVDO/CDMA BC0 [1]	24dBm+2/-1dB	<-49dBm
TD-SCDMA B34	24dBm+1/-3dB	<-49dBm
TD-SCDMA B39	24dBm+1/-3dB	<-49dBm
LTE-FDD B1	23dBm±2dB	<-39dBm
LTE-FDD B3	23dBm±2dB	<-39dBm
LTE-FDD B5	23dBm±2dB	<-39dBm

LTE-FDD B8	23dBm±2dB	<-39dBm
LTE-TDD B34	23dBm±2dB	<-39dBm
LTE-TDD B38	23dBm±2dB	<-39dBm
LTE-TDD B39	23dBm±2dB	<-39dBm
LTE-TDD B40	23dBm±2dB	<-39dBm
LTE-TDD B41	23dBm±2dB	<-39dBm

Table 65: AG35-E RF Output Power

Frequency	Max.	Min.
EGSM900	33dBm±2dB	5dBm±5dB
DCS1800	30dBm±2dB	0dBm±5dB
WCDMA B1	24dBm+1/-3dB	<-49dBm
WCDMA B5	24dBm+1/-3dB	<-49dBm
WCDMA B8	24dBm+1/-3dB	<-49dBm
LTE-FDD B1	23dBm±2dB	<-39dBm
LTE-FDD B3	23dBm±2dB	<-39dBm
LTE-FDD B5	23dBm±2dB	<-39dBm
LTE-FDD B7	23dBm±2dB	<-39dBm
LTE-FDD B8	23dBm±2dB	<-39dBm
LTE-FDD B20	23dBm±2dB	<-39dBm
LTE-FDD B28	23dBm±2dB	<-39dBm
LTE-TDD B38	23dBm±2dB	<-39dBm
LTE-TDD B40	23dBm±2dB	<-39dBm

Table 66: AG35-NA RF Output Power

Frequency	Max.	Min.
GSM850	33dBm±2dB	5dBm±5dB
PCS1900	30dBm±2dB	0dBm±5dB
WCDMA B2	24dBm+1/-3dB	<-49dBm
WCDMA B4	24dBm+1/-3dB	<-49dBm
WCDMA B5	24dBm+1/-3dB	<-49dBm
LTE-FDD B2	23dBm±2dB	<-39dBm
LTE-FDD B4	23dBm±2dB	<-39dBm
LTE-FDD B5	23dBm±2dB	<-39dBm
LTE-FDD B7	23dBm±2dB	<-39dBm
LTE-FDD B12	23dBm±2dB	<-39dBm
LTE-FDD B13	23dBm±2dB	<-39dBm
LTE-FDD B17	23dBm±2dB	<-39dBm

Table 67: AG35-LA RF Output Power

Frequency	Max.	Min.
GSM850	33dBm±2dB	5dBm±5dB
EGSM900	33dBm±2dB	5dBm±5dB
DCS1800	30dBm±2dB	0dBm±5dB
PCS1900	30dBm±2dB	0dBm±5dB
WCDMA B1	24dBm+1/-3dB	<-49dBm
WCDMA B2	24dBm+1/-3dB	<-49dBm
WCDMA B4	24dBm+1/-3dB	<-49dBm
WCDMA B3	24dBm+1/-3dB	<-49dBm

WCDMA B5	24dBm+1/-3dB	<-49dBm
WCDMA B8	24dBm+1/-3dB	<-49dBm
LTE-FDD B1	23dBm±2dB	<-39dBm
LTE-FDD B2	23dBm±2dB	<-39dBm
LTE-FDD B3	23dBm±2dB	<-39dBm
LTE-FDD B4	23dBm±2dB	<-39dBm
LTE-FDD B5	23dBm±2dB	<-39dBm
LTE-FDD B7	23dBm±2dB	<-39dBm
LTE-FDD B8	23dBm±2dB	<-39dBm
LTE-FDD B28	23dBm±2dB	<-39dBm

Table 68: AG35-J RF Output Power

Frequency	Max.	Min.
WCDMA B1	24dBm+1/-3dB	<-49dBm
WCDMA B3	24dBm+1/-3dB	<-49dBm
WCDMA B5	24dBm+1/-3dB	<-49dBm
WCDMA B6	24dBm+1/-3dB	<-49dBm
WCDMA B8	24dBm+1/-3dB	<-49dBm
WCDMA B19	24dBm+1/-3dB	<-49dBm
LTE-FDD B1	23dBm±2dB	<-39dBm
LTE-FDD B3	23dBm±2dB	<-39dBm
LTE-FDD B5	23dBm±2dB	<-39dBm
LTE-FDD B8	23dBm±2dB	<-39dBm
LTE-FDD B9	23dBm±2dB	<-39dBm
LTE-FDD B19	23dBm±2dB	<-39dBm

LTE-FDD B21	23dBm±2dB	<-39dBm
LTE-FDD B28	23dBm±2dB	<-39dBm
LTE-TDD B41	23dBm±2dB	<-39dBm

NOTES

1. [1] EVDO/CDMA BC0 for AG35-CE and LTE-FDD B28 for AG35-NA are optional.
2. In GPRS 4 slots TX mode, the maximum output power is reduced by 3.0dB. The design conforms to the GSM specification as described in ***Chapter 13.16*** of *3GPP TS 51.010-1*.

6.6. RF Receiving Sensitivity

Table 69: AG35-CE RF Receiving Sensitivity

Frequency	Receive Sensitivity (Typ.)			
	Primary	Diversity	SIMO	3GPP (SIMO)
EGSM900	-109dBm	/	/	-102dBm
DCS1800	-109dBm	/	/	-102dBm
WCDMA B1	-109dBm	/	/	-106.7dBm
WCDMA B8	-110dBm	/	/	-103.7dBm
EVDO/CDMA BC0 [1]	-109dBm	/	/	-104dBm
TD-SCDMA B34	-109dBm	/	/	-108dBm
TD-SCDMA B39	-110dBm	/	/	-108dBm
LTE-FDD B1 (10M)	-98dBm	-99dBm	-102.5dBm	-96.3dBm
LTE-FDD B3 (10M)	-98.6dBm	-99dBm	-102dBm	-93.3dBm
LTE-FDD B5 (10M)	-98.5dBm	-100dBm	-103dBm	-94.3dBm
LTE-FDD B8 (10M)	-98.5dBm	-100dBm	-102.7dBm	-93.3dBm
LTE-TDD B34 (10M)	-98.1dBm	-99dBm	-101.7dBm	-96.3dBm

LTE-TDD B38 (10M)	-98.5dBm	-98dBm	-102dBm	-94.3dBm
LTE-TDD B39 (10M)	-98.4dBm	-99dBm	-102.1dBm	-96.3dBm
LTE-TDD B40 (10M)	-98.3dBm	-99dBm	-101.5dBm	-96.3dBm
LTE-TDD B41 (10M)	-97.6dBm	-98dBm	-101dBm	-94.3dBm

Table 70: AG35-E RF Receiving Sensitivity

Frequency	Receive Sensitivity (Typ.)			
	Primary	Diversity	SIMO	3GPP (SIMO)
EGSM900	-108.5	/	/	-102dBm
DCS1800	-108.7	/	/	-102dBm
WCDMA B1	-110	/	/	-106.7dBm
WCDMA B5	-110.5	/	/	-104.7dBm
WCDMA B8	-110	/	/	-103.7dBm
LTE-FDD B1 (10M)	-98.1	-99	-101.5	-96.3dBm
LTE-FDD B3 (10M)	-98.5	-99	-101.7	-93.3dBm
LTE-FDD B5 (10M)	-99.5	-100.5	-102.5	-94.3dBm
LTE-FDD B7 (10M)	-97	-99	-101.5	-94.3dBm
LTE-FDD B8 (10M)	-98.5	-99.8	-101.7	-93.3dBm
LTE-FDD B20 (10M)	-98.2	-99.2	-101.5	-93.3dBm
LTE-FDD B28 (10M)	-98.5	-99.2	-101.8	-94.8dBm
LTE-TDD B38 (10M)	-96.5	-98.6	-100.8	-94.3dBm
LTE-TDD B40 (10M)	-98	-98.3	-101.3	-96.3dBm

Table 71: AG35-NA RF Receiving Sensitivity

Frequency	Receive Sensitivity (Typ.)			
	Primary	Diversity	SIMO	3GPP (SIMO)
GSM850	-108.5	/	/	-102dBm
PCS1900	-108.2	/	/	-102dBm
WCDMA B2	-109.5	-110.2	-110.4	-104.7dBm
WCDMA B4	-109.8	-109,5	-110.9	-106.7dBm
WCDMA B5	-110	-109.5	-110.8	-104.7dBm
LTE-FDD B2 (10M)	-98	-98.5	-100.6	-94.3dBm
LTE-FDD B4 (10M)	-97.9	-98,2	-100.3	-96.3dBm
LTE-FDD B5 (10M)	-98.5	-99	-100.8	-94.3dBm
LTE-FDD B7 (10M)	-97.3	-97.6	-99.9	-94.3dBm
LTE-FDD B12 (10M)	-98.5	-99	-99.9	-93.3dBm
LTE-FDD B13 (10M)	-98	-99.6	-100	-93.3dBm
LTE-FDD B17 (10M)	-98.3	-98.5	-100.3	-93.3dBm
LTE-FDD B28 [1)] (10M)	-98	-98.5	-100.1	-94.8dBm

Table 72: AG35-LA RF Receiving Sensitivity

Frequency	Receive Sensitivity (Typ.)			
	Primary	Diversity	SIMO	3GPP (SIMO)
GSM850	TBD	/	/	-102dBm
EGSM900	TBD	/	/	-102dBm
DCS1800	TBD	/	/	-102dBm
PCS1900	TBD	/	/	-102dBm
WCDMA B1	TBD	TBD	TBD	-106.7dBm

WCDMA B2	TBD	TBD	TBD	-104.7dBm
WCDMA B4	TBD	TBD	TBD	-106.7dBm
WCDMA B3	TBD	TBD	TBD	-103.7dBm
WCDMA B5	TBD	TBD	TBD	-104.7dBm
WCDMA B8	TBD	TBD	TBD	-103.7dBm
LTE-FDD B1 (10M)	TBD	TBD	TBD	-96.3dBm
LTE-FDD B2 (10M)	TBD	TBD	TBD	-94.3dBm
LTE-FDD B3 (10M)	TBD	TBD	TBD	-93.3dBm
LTE-FDD B4 (10M)	TBD	TBD	TBD	-96.3dBm
LTE-FDD B5 (10M)	TBD	TBD	TBD	-94.3dBm
LTE-FDD B7 (10M)	TBD	TBD	TBD	-94.3dBm
LTE-FDD B8 (10M)	TBD	TBD	TBD	-93.3dBm
LTE-FDD B28 (10M)	TBD	TBD	TBD	-94.8dBm

Table 73: AG35-J RF Receiving Sensitivity

Frequency	Receive Sensitivity (Typ.)			
	Primary	Diversity	SIMO	3GPP (SIMO)
WCDMA B1	-109	-109.8	-110.2	-106.7dBm
WCDMA B3	-110	-109.5	-110.3	-103.7dBm
WCDMA B5	-109.6	-109.5	-110.6	-104.7dBm
WCDMA B6	-109.2	-109.8	-110.3	-106.7dBm
WCDMA B8	-110	-109.9	-110.9	-103.7dBm
WCDMA B19	-109,8	-109.7	-110.3	-106.7dBm
LTE-FDD B1 (10M)	-97.8	-98.2	-99.8	-96.3dBm
LTE-FDD B3 (10M)	-97.2	-98.5	-99.3	-93.3dBm
LTE-FDD B5 (10M)	-98.2	-98	-99.9	-94.3dBm

LTE-FDD B8 (10M)	-98.5	-98.6	-100	-93.3dBm
LTE-FDD B9(10M)	-98,2	-98	-100	-95.3dBm
LTE-FDD B19 (10M)	-97.9	-98	-99.8	-96.3dBm
LTE-FDD B21 (10M)	-97	-97	-99	-96.3dBm
LTE-FDD B28 (10M)	-97	-97.2	-110.2	-94.8dBm
LTE-TDD B41 (10M)	-109	-109.8	-110.2	-94.3dBm

NOTE

[1] EVDO/CDMA BC0 for AG35-CE and LTE-FDD B28 for AG35-NA are optional.

6.7. Electrostatic Discharge

The module is not protected against electrostatics discharge (ESD) in general. Consequently, it is subject to ESD handling precautions that typically apply to ESD sensitive components. Proper ESD handling and packaging procedures must be applied throughout the processing, handling and operation of any application that incorporates the module.

The following table shows the module electrostatic discharge characteristics.

Table 74: Electrostatic Discharge Characteristics

Tested Points	Contact Discharge	Air Discharge	Unit
VBAT, GND	±9	±16	kV
Antenna Interfaces	±10	±16	kV
Other Interfaces	±0.5	±1	kV

6.8. Thermal Consideration

In order to achieve better performance of the module, it is recommended to comply with the following principles for thermal consideration:

- On customers' PCB design, please keep placement of the module away from heating sources, especially high power components such as ARM processor, audio power amplifier, power supply, etc.
- Do not place components on the opposite side of the PCB area where the module is mounted, in order to facilitate adding of heatsink when necessary.
- Do not apply solder mask on the opposite side of the PCB area where the module is mounted, so as to ensure better heat dissipation performance.
- The reference ground of the area where the module is mounted should be complete, and add ground vias as many as possible for better heat dissipation. Through-holes will create better heat dissipation performance.
- Make sure the ground pads of the module and PCB are fully connected.
- According to customers' application demands, the heatsink can be mounted on the top of the module, or the opposite side of the PCB area where the module is mounted, or both of them.
- The heatsink should be designed with as many fins as possible to increase heat dissipation area. Meanwhile, a thermal pad with high thermal conductivity should be used between the heatsink and module/PCB.

The following shows two kinds of heatsink designs for reference and customers can choose one or both of them according to their application structure.

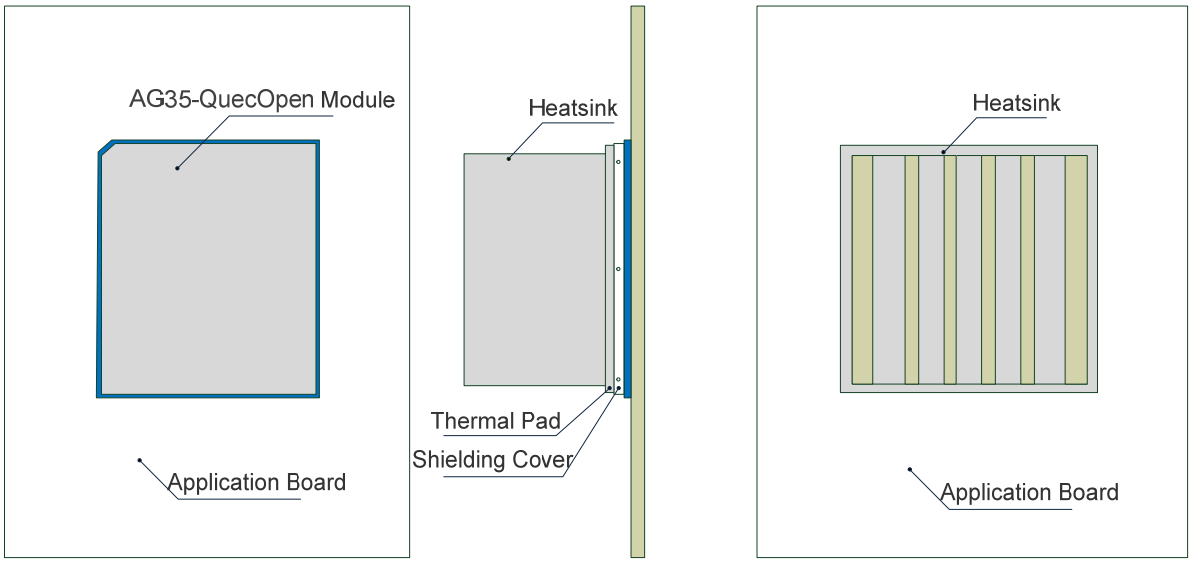

Figure 45: Referenced Heatsink Design (Heatsink at the Top of the Module)

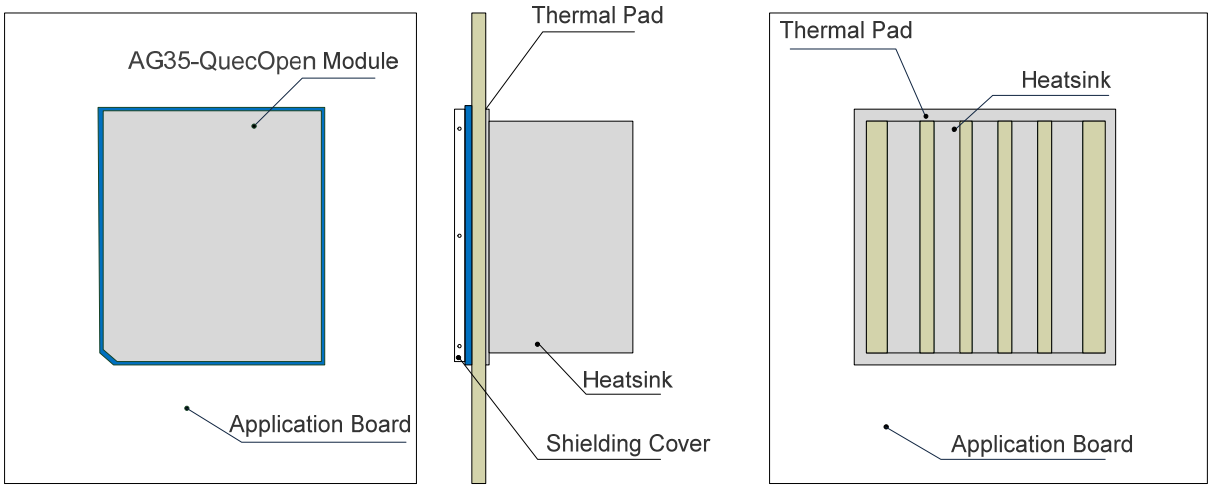

Figure 46: Referenced Heatsink Design (Heatsink at the Backside of Customers' PCB)

NOTES

1. For better performance, the maximum temperature of the internal BB chip should be kept below 105°C. When the maximum temperature of the BB chip reaches or exceeds 105°C, the module works normal but provides reduced performance (such as RF output power, data rate, etc.). When the maximum BB chip temperature reaches or exceeds 118°C, the module will disconnect from the network, and it will recover to network connected state after the maximum temperature falls below 118°C. Therefore, the thermal design should be maximally optimized to make sure the maximum BB chip temperature always maintains below 105°C. Customers can execute **AT+QTEMP** command and get the maximum BB chip temperature from the first returned value.
2. For more detailed introduction on thermal design, please refer to ***document [9]***.

7 Mechanical Dimensions

This chapter describes the mechanical dimensions of the module. All dimensions are measured in mm, and the tolerances for dimensions without tolerance values are ±0.05mm.

7.1. Mechanical Dimensions of the Module

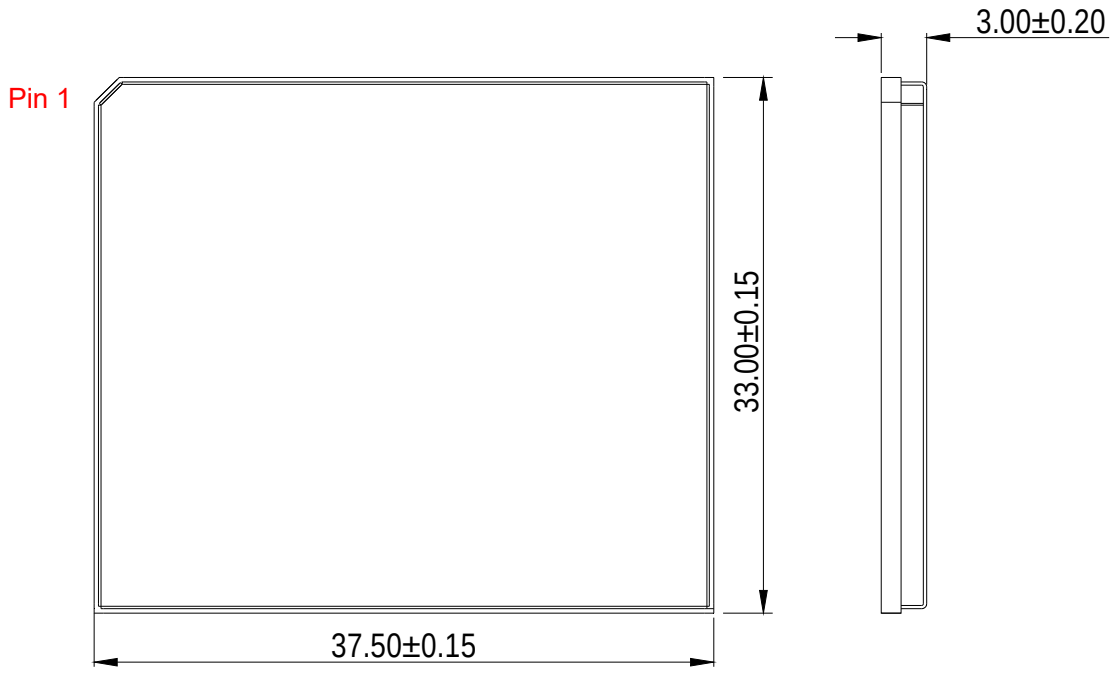

Figure 47: Module Top and Side Dimensions

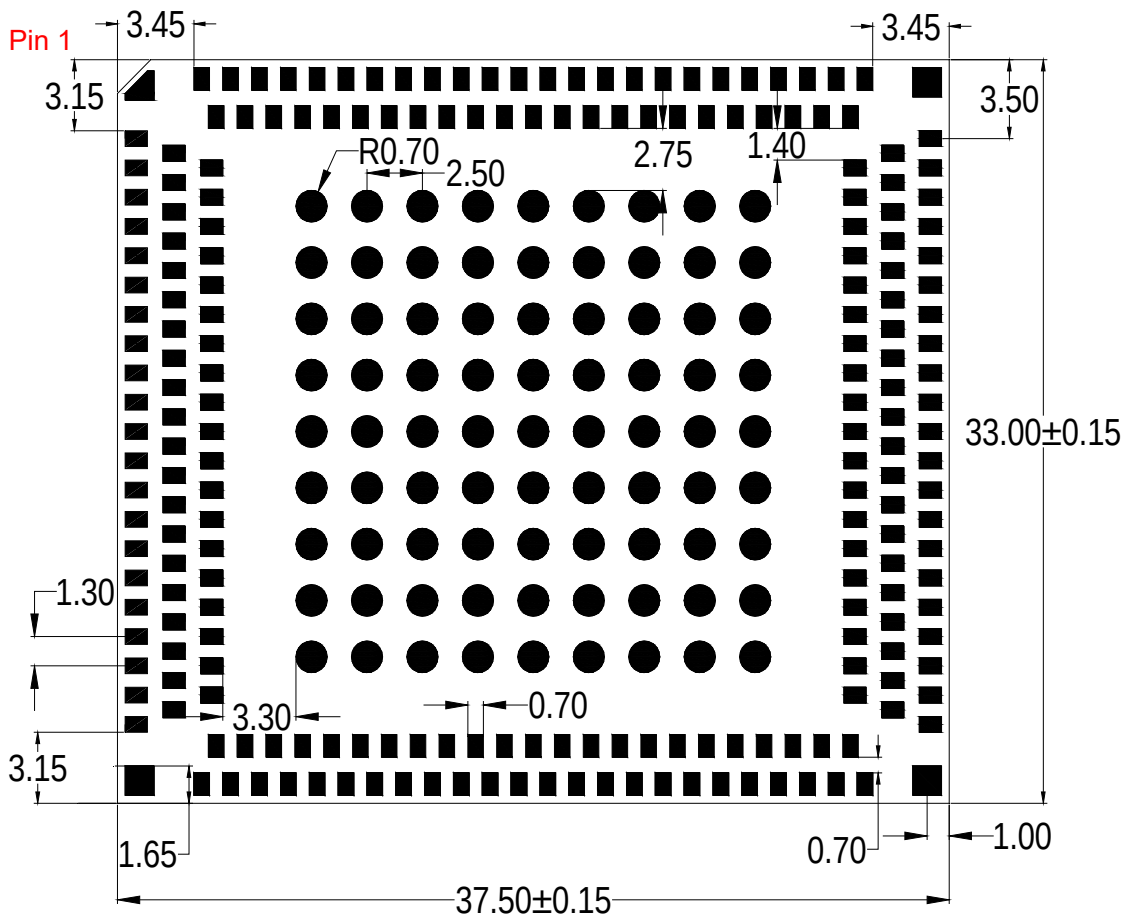

Figure 48: Module Bottom Dimensions (Top View)

7.2. Recommended Footprint

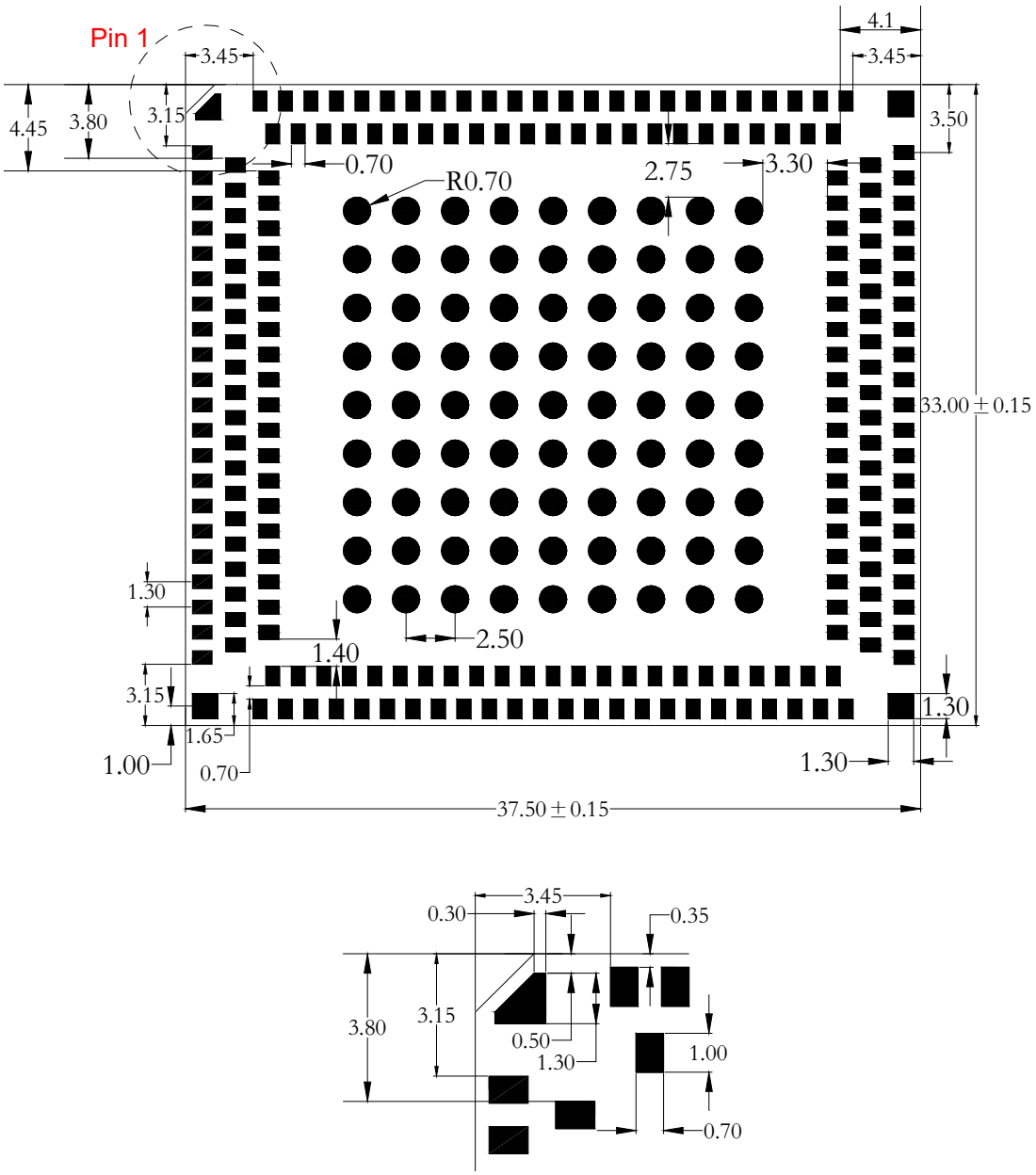

Figure 49: Recommended Footprint (Top View)

NOTE

For convenient maintenance of the module, please keep about 3mm between the module and other components on the host PCB.

7.3. Design Effect Drawings of the Module

Figure 50: Top View of the Module

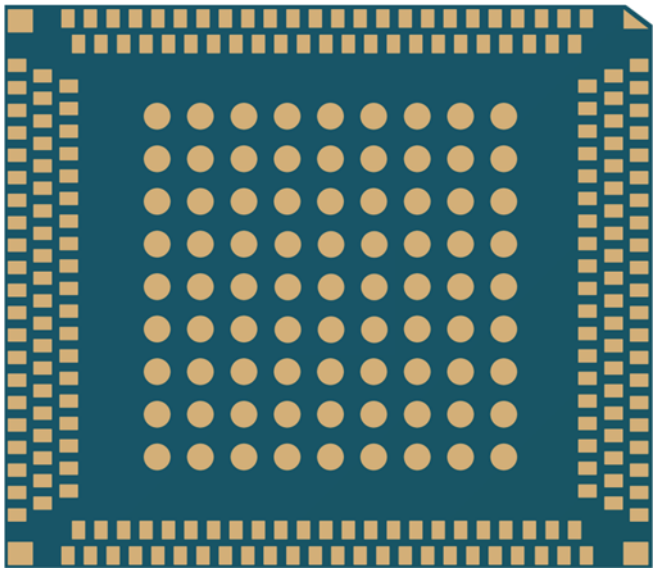

Figure 51: Bottom View of the Module

NOTE

These are renderings of AG35-Quecopen module. For authentic dimension and appearance, please refer to the module that you receive from Quectel.

8 Storage, Manufacturing and Packaging

8.1. Storage

AG35-Quecopen is stored in a vacuum-sealed bag. It is rated at MSL 3, and its storage restrictions are shown as below.

1. Shelf life in vacuum-sealed bag: 12 months at <40ºC/90%RH.

2. After the vacuum-sealed bag is opened, devices that will be subjected to reflow soldering or other high temperature processes must be:

   - Mounted within 168 hours at the factory environment of ≤30ºC/60%RH.
   - Stored at <10% RH.

3. Devices require bake before mounting, if any circumstance below occurs:

   - When the ambient temperature is 23ºC±5ºC and the humidity indicator card shows the humidity is >10% before opening the vacuum-sealed bag.
   - Device mounting cannot be finished within 168 hours at factory conditions of ≤30ºC/60%RH.

4. If baking is required, devices may be baked for 8 hours at 120ºC±5ºC.

NOTE

As the plastic container cannot be subjected to high temperature, it should be removed from devices before high temperature (120ºC) baking. If shorter baking time is desired, please refer to *IPC/JEDECJ-STD-033* for baking procedure.

8.2. Manufacturing and Soldering

Push the squeegee to apply the solder paste on the surface of stencil, thus making the paste fill the stencil openings and then penetrate to the PCB. The force on the squeegee should be adjusted properly so as to produce a clean stencil surface on a single pass. To ensure the module soldering quality, the thickness of stencil for the module is recommended to be 0.15mm~0.18mm. For more details, please refer to ***document [8]***.

It is suggested that the peak reflow temperature is 240~245ºC, and the absolute maximum reflow temperature is 245ºC. To avoid damage to the module caused by repeated heating, it is strongly recommended that the module should be mounted after reflow soldering for the other side of PCB has been completed. The recommended reflow soldering thermal profile (lead-free reflow soldering) and related parameters are shown below.

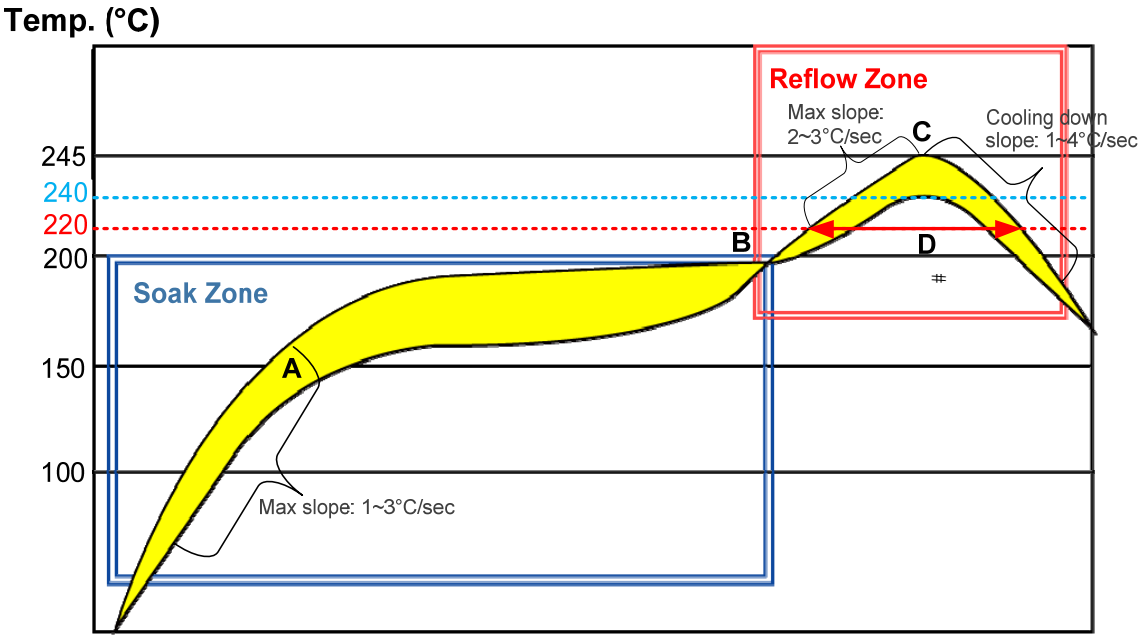

Figure 52: Recommended Reflow Soldering Thermal Profile

Table 75: Recommended Thermal Profile Parameters

Factor	Recommendation
Soak Zone	
Max slope	1 to 3°C/sec
Soak time (between A and B: 150°C and 200°C)	60 to 120 sec

Reflow Zone	
Max slope	2 to 3°C/sec
Reflow time (D: over 220°C)	40 to 60 sec
Max temperature	240°C ~ 245°C
Cooling down slope	1 to 4°C/sec
Reflow Cycle	
Max reflow cycle	1

8.3. Packaging

AG35-Quecopen is packaged in tape and reel carriers. One reel is 10.56 meters long and contains 220 modules. The figures below show the packaging details, measured in mm.

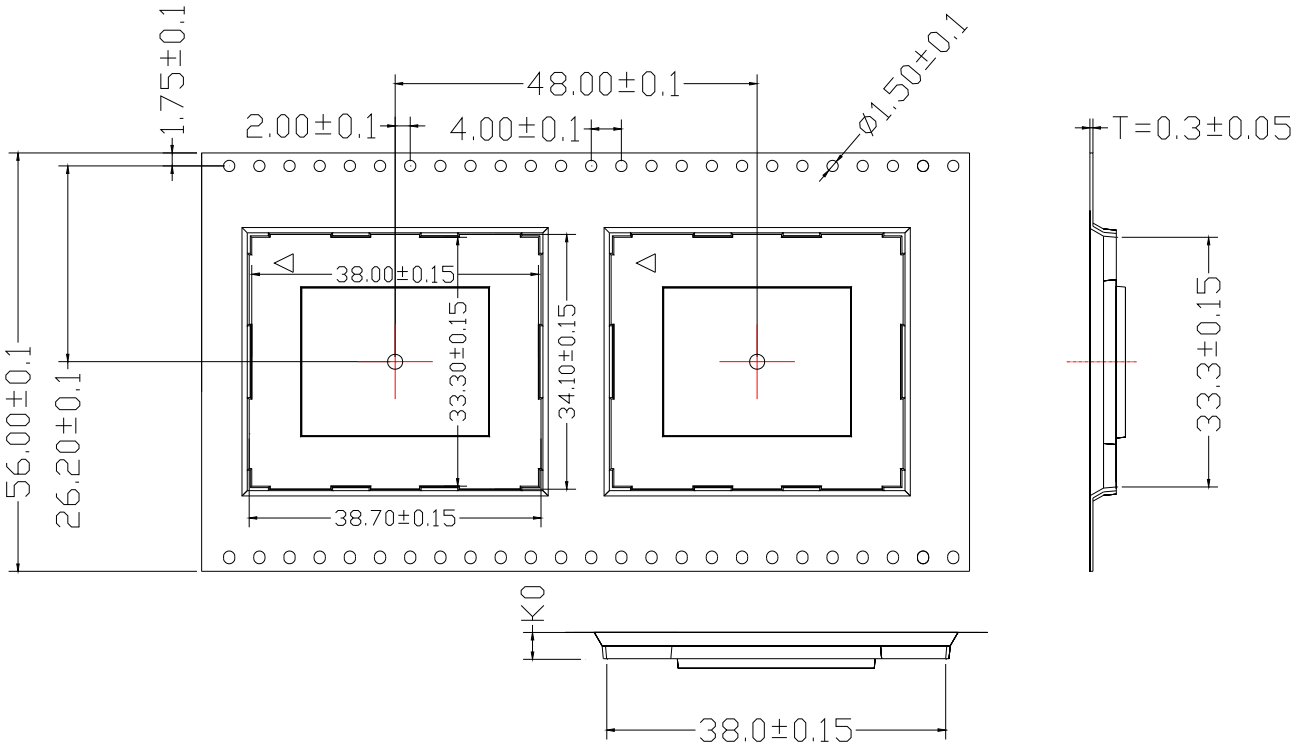

Figure 53: Tape Specifications

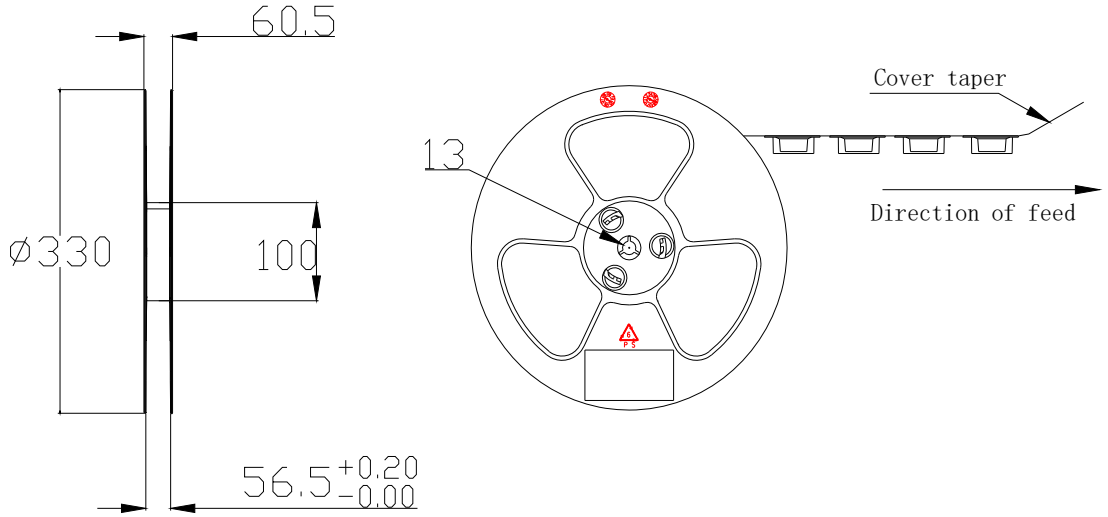

Figure 54: Reel Specifications

9 Appendix A References

Table 76: Related Documents

SN	Document Name	Remark
[1]	Quectel_AG35_Power_Management_Application_Note	AG35 Power Management Application Note
[2]	Quectel_AG35_AT_Commands_Manual	AG35 AT Commands Manual
[3]	Quectel_AG35-Quecopen_Developer_Guide	AG35-Quecopen Developer Guide
[4]	Quectel_LTE_OPEN_EVB_User_Guide	EVB User Guide for LTE Quecopen Modules
[5]	Quectel_AG35_GNSS_AT_Commands_Manual	AG35 GNSS AT Commands Manual
[6]	Quectel_RF_Layout_Application_Note	RF Layout Application Note
[7]	Quectel_AG35-Quecopen_Reference_Design	AG35 Reference Design
[8]	Quectel_AG35_Secondary_SMT_User_Guide	AG35 Secondary SMT User Guide
[9]	Quectel_LTE_Module_Thermal_Design_Guide	Thermal Design Guide for Quectel LTE (LTE/LTE-A/Automotive) modules

Table 77: Terms and Abbreviations

Abbreviation	Description
AMR	Adaptive Multi-rate
API	Application Program Interface
bps	Bits Per Second
BT	Bluetooth
CHAP	Challenge Handshake Authentication Protocol
CS	Coding Scheme

CSD	Circuit Switched Data
CTS	Clear To Send
DC-HSPA+	Dual-carrier High Speed Packet Access
DFOTA	Delta Firmware Upgrade Over The Air
DL	Downlink
DTR	Data Terminal Ready
DTX	Discontinuous Transmission
EFR	Enhanced Full Rate
ESD	Electrostatic Discharge
EVDO	Evolution-Data Optimized
FDD	Frequency Division Duplex
FR	Full Rate
GLONASS	GLObalnaya NAvigatsionnaya Sputnikovaya Sistema, the Russian Global Navigation Satellite System
GMSK	Gaussian Minimum Shift Keying
GNSS	Global Navigation Satellite System
GPS	Global Positioning System
GSM	Global System for Mobile Communications
HR	Half Rate
HSPA	High Speed Packet Access
HSDPA	High Speed Downlink Packet Access
HSUPA	High Speed Uplink Packet Access
I/O	Input/Output
Inorm	Normal Current
LED	Light Emitting Diode
LNA	Low Noise Amplifier

LTE	Long Term Evolution
MIMO	Multiple Input Multiple Output
MO	Mobile Originated
MS	Mobile Station (GSM engine)
MT	Mobile Terminated
PAP	Password Authentication Protocol
PCB	Printed Circuit Board
PDU	Protocol Data Unit
PPP	Point-to-Point Protocol
Ppp	Peak Pulse Power
QAM	Quadrature Amplitude Modulation
QPSK	Quadrature Phase Shift Keying
RF	Radio Frequency
RHCP	Right Hand Circularly Polarized
Rx	Receive
SIMO	Single Input Multiple Output
SMS	Short Message Service
TDD	Time Division Duplexing
TDMA	Time Division Multiple Access
TD-SCDMA	Time Division-Synchronous Code Division Multiple Access
TX	Transmitting Direction
UL	Uplink
UMTS	Universal Mobile Telecommunications System
URC	Unsolicited Result Code
(U)SIM	(Universal) Subscriber Identity Module

Vmax	Maximum Voltage Value
Vnorm	Normal Voltage Value
Vmin	Minimum Voltage Value
V_{IH}max	Maximum Input High Level Voltage Value
V_{IH}min	Minimum Input High Level Voltage Value
V_{IL}max	Maximum Input Low Level Voltage Value
V_{IL}min	Minimum Input Low Level Voltage Value
V_{I}max	Absolute Maximum Input Voltage Value
V_{I}min	Absolute Minimum Input Voltage Value
V_{OH}max	Maximum Output High Level Voltage Value
V_{OH}min	Minimum Output High Level Voltage Value
V_{OL}max	Maximum Output Low Level Voltage Value
V_{OL}min	Minimum Output Low Level Voltage Value
V_{RWM}	Reserve Stand-Off Voltage
VSWR	Voltage Standing Wave Ratio
WCDMA	Wideband Code Division Multiple Access
WLAN	Wireless Local Area Network

10 Appendix B GPRS Coding Schemes

Table 78: Description of Different Coding Schemes

Scheme	CS-1	CS-2	CS-3	CS-4
Code Rate	1/2	2/3	3/4	1
USF	3	3	3	3
Pre-coded USF	3	6	6	12
Radio Block excl.USF and BCS	181	268	312	428
BCS	40	16	16	16
Tail	4	4	4	-
Coded Bits	456	588	676	456
Punctured Bits	0	132	220	-
Data Rate Kb/s	9.05	13.4	15.6	21.4

11 Appendix C GPRS Multi-slot Classes

Twenty-nine classes of GPRS multi-slot modes are defined for MS in GPRS specification. Multi-slot classes are product dependent, and determine the maximum achievable data rates in both the uplink and downlink directions. Written as 3+1 or 2+2, the first number indicates the amount of downlink timeslots, while the second number indicates the amount of uplink timeslots. The active slots determine the total number of slots the GPRS device can use simultaneously for both uplink and downlink communications.

The description of different multi-slot classes is shown in the following table.

Table 79: GPRS Multi-slot Classes

Multislot Class	Downlink Slots	Uplink Slots	Active Slots
1	1	1	2
2	2	1	3
3	2	2	3
4	3	1	4
5	2	2	4
6	3	2	4
7	3	3	4
8	4	1	5
9	3	2	5
10	4	2	5
11	4	3	5
12	4	4	5
13	3	3	NA
14	4	4	NA

15	5	5	NA
16	6	6	NA
17	7	7	NA
18	8	8	NA
19	6	2	NA
20	6	3	NA
21	6	4	NA
22	6	4	NA
23	6	6	NA
24	8	2	NA
25	8	3	NA
26	8	4	NA
27	8	4	NA
28	8	6	NA
29	8	8	NA
30	5	1	6
31	5	2	6
32	5	3	6
33	5	4	6

12 Appendix D EDGE Modulation and Coding Schemes

Table 80: EDGE Modulation and Coding Schemes

Coding Scheme	Modulation	Coding Family	1 Timeslot	2 Timeslot	4 Timeslot
CS-1:	GMSK	/	9.05kbps	18.1kbps	36.2kbps
CS-2:	GMSK	/	13.4kbps	26.8kbps	53.6kbps
CS-3:	GMSK	/	15.6kbps	31.2kbps	62.4kbps
CS-4:	GMSK	/	21.4kbps	42.8kbps	85.6kbps
MCS-1	GMSK	C	8.80kbps	17.60kbps	35.20kbps
MCS-2	GMSK	B	11.2kbps	22.4kbps	44.8kbps
MCS-3	GMSK	A	14.8kbps	29.6kbps	59.2kbps
MCS-4	GMSK	C	17.6kbps	35.2kbps	70.4kbps
MCS-5	8-PSK	B	22.4kbps	44.8kbps	89.6kbps
MCS-6	8-PSK	A	29.6kbps	59.2kbps	118.4kbps
MCS-7	8-PSK	B	44.8kbps	89.6kbps	179.2kbps
MCS-8	8-PSK	A	54.4kbps	108.8kbps	217.6kbps
MCS-9	8-PSK	A	59.2kbps	118.4kbps	236.8kbps

FCC Regulations:

This device complies with part 15 of the FCC Rules. Operation is subject to the following two conditions: (1) This device may not cause harmful interference, and (2) This device must accept any interference received, including interference that may cause undesired operation.

This device has been tested and found to comply with the limits for a Class B digital device , pursuant to Part 15 of the FCC Rules. These limits are designed to provide reasonable protection against harmful interference in a residential installation. This equipment generates, uses and can radiated radio frequency energy and, if not installed and used in accordance with the instructions, may cause harmful interference to radio communications. However, there is no guarantee that interference will not occur in a particular installation If this equipment does cause harmful interference to radio or television reception, which can be determined by turning the equipment off and on, the user is encouraged to try to correct the interference by one or more of the following measures:

-Reorient or relocate the receiving antenna.
-Increase the separation between the equipment and receiver.
-Connect the equipment into an outlet on a circuit different from that to which the receiver is connected.
-Consult the dealer or an experienced radio/TV technician for help.

Caution: Changes or modifications not expressly approved by the party responsible for compliance could void the user‘s authority to operate the equipment.

RF Exposure Information

This device complies with FCC radiation exposure limits set forth for an uncontrolled environment. In order to avoid the possibility of exceeding the FCC radio frequency exposure limits, human proximity to the antenna shall not be less than 20cm (8 inches) during normal operation.

ISED Notice

This device complies with Innovation, Science and Economic Development Canada license-exempt RSS standard(s). Operation is subject to the following two conditions:
(1) this device may not cause interference, and
(2) this device must accept any interference, including interference that may cause undesired operation of the device.

Le présent appareil est conforme aux CNR Innovation, Sciences et Développement économique Canada applicables aux appareils radio exempts de licence. L'exploitation est autorisée aux deux conditions suivantes:
(1) l'appareil ne doit pas produire de brouillage, et
(2) l'utilisateur de l'appareil doit accepter tout brouillage radioélectrique subi, même si le brouillage est susceptible d'en

This device complies with the Canadian ICES-003 Class B specifications.
CAN ICES-3(B)/ NMB-3(B)

ISED Radiation Exposure Statement

This device complies with RSS-102 radiation exposure limits set forth for an uncontrolled environment. In order to avoid the possibility of exceeding the ISED radio frequency exposure limits, human proximity to the antenna shall not be less than 20cm (8 inches) during normal operation.

Cet appareil est conforme aux limites d'exposition aux rayonnements de la CNR-102 définies pour un environnement non contrôlé. Afin d'éviter la possibilité de dépasser les limites d'exposition aux fréquences radio de la CNR-102, la proximité humaine à l'antenne ne doit pas être inférieure à 20 cm (8 pouces) pendant le fonctionnement normal.

IMPORTANT NOTE:

This module is intended for OEM integrator. The OEM integrator is still responsible for the FCC compliance requirement of the end product, which integrates this module. 20cm minimum distance has to be able to be maintained between the antenna and the users for the host this module is integrated into. Under such configuration, the FCC radiation exposure limits set forth for an population/uncontrolled environment can be satisfied.

Any changes or modifications not expressly approved by the manufacturer could void the user's authority to operate this equipment.

USERS MANUAL OF THE END PRODUCT:

In the users manual of the end product, the end user has to be informed to keep at least 20cm separation with the antenna while this end product is installed and operated. The end user has to be informed that the FCC radio-frequency exposure guidelines for an uncontrolled environment can be satisfied. The end user has to also be informed that any changes or modifications not expressly approved by the manufacturer could void the user's authority to operate this equipment. If the size of the end product is smaller than 8x10cm, then additional FCC part 15.19 statement is required to be available in the users manual: This device complies with Part 15 of FCC rules. Operation is subject to the following two conditions: (1) this device may not cause harmful interference and (2) this device must accept any interference received, including interference that may cause undesired operation.

LABEL OF THE END PRODUCT:

The final end product must be labeled in a visible area with the following " Contains Transmitter Module FCC ID: XMR201905AG35NA ". If the size of the end product is larger than 8x10cm, then the following FCC part 15.19 statement has to also be available on the label: This device complies with Part 15 of FCC rules.

Operation is subject to the following two conditions: (1) this device may not cause harmful interference and (2) this device must accept any interference received, including interference that may cause undesired operation.

The Innovation, Science and Economic Development Canada certification label of a module shall be clearly visible at all times when installed in the host device; otherwise, the host device must be labeled to display the Innovation, Science and Economic Development Canada certification number for the module, preceded by the words “Contains transmitter module IC: 10224A-2019AG35NA”.