RF TEST REPORT

Applicant	Quectel Wireless Solutions Co., Ltd
FCC ID	XMR201808EC25AFX
Product	LTE Module
Brand	Quectel
Model	EC25-AFX; EC25-AFX MINIPCIE
Report No.	R1907A0408-R3
Issue Date	September 25, 2019

TA Technology (Shanghai) Co., Ltd. tested the above equipment in accordance with the requirements in **FCC CFR47 Part 2 (2017)/ FCC CFR47 Part 27C (2017)**. The test results show that the equipment tested is capable of demonstrating compliance with the requirements as documented in this report.

Peng Tao

Performed by: Peng Tao

Kai Xu

Approved by: Kai Xu

TA Technology (Shanghai) Co., Ltd.

No.145, Jintang Rd, Tangzhen Industry Park, Pudong Shanghai, China

TEL: +86-021-50791141/2/3

FAX: +86-021-50791141/2/3-8000

Table of Contents

1 Test Laboratory 4
1.1 Notes of the Test Report 4
1.2 Test facility 4
1.3 Testing Location 5
2 General Description of Equipment under Test 6
3 Applied Standards 8
4 Test Configuration 9
5 Test Case Results 11
5.1 RF Power Output 11
5.2 Effective Isotropic Radiated Power 22
5.3 Occupied Bandwidth 29
5.4 Band Edge Compliance 60
5.5 Peak-to-Average Power Ratio (PAPR) 98
5.6 Frequency Stability 103
5.7 Spurious Emissions at Antenna Terminals 111
5.8 Radiates Spurious Emission 144
6 Main Test Instruments 150
ANNEX A: EUT Appearance and Test Setup 151
A.1 EUT Appearance 151
A.2 Test Setup 153

This report shall not be reproduced except in full, without the written approval of TA Technology (Shanghai) Co., Ltd.

Summary of Measurement Results

Number	Test Case	Clause in FCC rules	Verdict
1	RF power output	2.1046	PASS
2	Effective Isotropic Radiated power	27.50(d)(4) /27.50(b)(10) /27.50(c)(10) /27.50(h)(2)	PASS
3	Occupied Bandwidth	2.1049	PASS
4	Band Edge Compliance	27.53(h) /27.53(g) /27.53(f) /27.53(c) /27.53(m)	PASS
5	Peak-to-Average Power Ratio	27.50(d)/KDB971168 D01(5.7)	PASS
6	Frequency Stability	2.1055 / 27.54	PASS
7	Spurious Emissions at Antenna Terminals	2.1051 /27.53(h) /27.53(g) /27.53(f)	PASS
8	Radiates Spurious Emission	2.1053 /27.53(h) /27.53(g) /27.53(f)	PASS
Date of Testing: June 29, 2018~ July 16, 2018 and July 30, 2018~ July 31, 2018 and August 3, 2019~ August 13, 2019			
Note: PASS: The EUT complies with the essential requirements in the standard. FAIL: The EUT does not comply with the essential requirements in the standard.			

This report shall not be reproduced except in full, without the written approval of TA Technology (Shanghai) Co., Ltd.

1 Test Laboratory

1.1 Notes of the Test Report

This report shall not be reproduced in full or partial, without the written approval of **TA technology (shanghai) co., Ltd.** The results documented in this report apply only to the tested sample, under the conditions and modes of operation as described herein .Measurement Uncertainties were not taken into account and are published for informational purposes only. This report is written to support regulatory compliance of the applicable standards stated above.

1.2 Test facility

CNAS (accreditation number: L2264)

TA Technology (Shanghai) Co., Ltd. has obtained the accreditation of China National Accreditation Service for Conformity Assessment (CNAS).

FCC (Designation number: CN1179, Test Firm Registration Number: 446626)

TA Technology (Shanghai) Co., Ltd. has been listed on the US Federal Communications Commission list of test facilities recognized to perform electromagnetic emissions measurements.

IC (recognition number is 8510A)

TA Technology (Shanghai) Co., Ltd. has been listed by industry Canada to perform electromagnetic emission measurement.

VCCI (recognition number is C-4595, T-2154, R-4113, G-10766)

TA Technology (Shanghai) Co., Ltd. has been listed by industry Japan to perform electromagnetic emission measurement.

A2LA (Certificate Number: 3857.01)

TA Technology (Shanghai) Co., Ltd. has been listed by American Association for Laboratory Accreditation to perform electromagnetic emission measurement.

This report shall not be reproduced except in full, without the written approval of TA Technology (Shanghai) Co., Ltd.

1.3 Testing Location

Company:	TA Technology (Shanghai) Co., Ltd.
Address:	No.145, Jintang Rd, Tangzhen Industry Park, Pudong Shanghai, China
City:	Shanghai
Post code:	201201
Country:	P. R. China
Contact:	Xu Kai
Telephone:	+86-021-50791141/2/3
Fax:	+86-021-50791141/2/3-8000
Website:	http://www.ta-shanghai.com
E-mail:	xukai@ta-shanghai.com

This report shall not be reproduced except in full, without the written approval of TA Technology (Shanghai) Co., Ltd.

2 General Description of Equipment under Test

Client Information

Applicant	Quectel Wireless Solutions Co., Ltd
Applicant address	Building 5, Shanghai Business Park Phase III (Area B), No.1016 Tianlin Road, Minhang District, Shanghai, China 200233
Manufacturer	Quectel Wireless Solutions Co., Ltd
Manufacturer address	Building 5, Shanghai Business Park Phase III (Area B), No.1016 Tianlin Road, Minhang District, Shanghai, China 200233

General information

EUT Description			
Model	EC25-AFX; EC25-AFX MINIPCIE		
IMEI	EC25-AFX :866834040000767 EC25-AFX MINIPCIE: 866834040002375		
Hardware Version	R1.0		
Software Version	EC25AFXGAR07A01M1G		
Power Supply	External Power Supply		
Antenna Type	The EUT don't have standard Antenna, The Antenna used for testi ng in this report is the after-market accessory (Dipole Antenna)		
Antenna Gain	4dBi		
Test Mode(s)	WCDMA Band IV; LTE Band 4/12/13/ 66/ 71;		
Test Modulation	(WCDMA)QPSK; (LTE)QPSK 16QAM;		
HSDPA UE Category	24		
HSUPA UE Category	6		
LTE Category	4		
Maximum E.I.R.P./ E.R.P.	WCDMA Band IV:	25.62dBm	
	LTE Band 4:	26.08dBm	
	LTE Band 12:	20.48dBm	
	LTE Band 13:	23.63dBm	
	LTE Band 66:	27.51dBm	
	LTE Band 71:	22.72dBm	
Rated Power Supply Voltage:	3.8V		
Extreme Voltage	Minimum: 3.3V Maximum: 4.3V		
Extreme Temperature	Lowest: -40°C Highest: +85°C		
Operating Frequency Range(s)	Mode	Tx (MHz)	Rx (MHz)
	WCDMA Band IV	1710 ~ 1755	2110 ~ 2155
	LTE Band 4	1710 ~ 1755	2110 ~ 2155

This report shall not be reproduced except in full, without the written approval of TA Technology (Shanghai) Co., Ltd.

	LTE Band 12	699 ~ 716	729 ~ 746
	LTE Band 13	777 ~ 787	746 ~ 756
	LTE Band 66	1710 ~ 1780	2110 ~ 2200
	LTE Band 71	663 ~ 698	617 ~ 652
Note：1. The information of the EUT is declared by the manufacturer.			

Accessory equipment	
Evaluation Board	RF Cable
RS232-to-USB Cable	Antenna: Dipole Antenna
Headset	DC 5V Adaptor

EC25-AFX and EC25-AFX MINIPCIE are all LTE modules. They support the same frequency bands, use the same chipset and share the same software & hardware design. The main difference is on the carrier board.

EC25-AFX MINIPCIE makes up of EC25-AFX module and PCIe transferred board.

The transferred board switches EC25-AFX module to follow PCI Express Mini Card 1.2 standard connector protocol. No any other internal changes in EC25-AFX module.

Two models are identical in interior structure and components, and just connector interface is different for the marketing requirement.

This report shall not be reproduced except in full, without the written approval of TA Technology (Shanghai) Co., Ltd.

3 Applied Standards

According to the specifications of the manufacturer, it must comply with the requirements of the following standards:

Test standards

FCC CFR47 Part 2 (2017)

FCC CFR47 Part 27C (2017)

ANSI/TIA-603-E (2016)

KDB 971168 D01 Power Meas License Digital Systems v03r01

This report shall not be reproduced except in full, without the written approval of TA Technology (Shanghai) Co., Ltd.

4 Test Configuration

Radiated measurements are performed by rotating the EUT in three different orthogonal test planes. EUT stand-up position (Z axis), lie-down position (X, Y axis). Receiver antenna polarization (horizontal and vertical), the worst emission was found in position (Xaxis, horizontal polarization) and the worst case was recorded.

All mode and data rates and positions and RB size and modulations were investigated.
Subsequently, only the worst case emissions are reported.
The following testing in WCDMA/LTE is set based on the maximum RF Output Power.
The following testing in different Bandwidth is set to detailin the following table:

Test modes are chosen to be reported as the worst case configuration below for WCDMA Band IV:

Test items	Modes/Modulation
	WCDMA Band IV
RF power output	RMC HSDPA/HSUPA DC-HSDPA
Effective Isotropic Radiated power	RMC
Occupied Bandwidth	RMC
Band Edge Compliance	RMC
Peak-to-Average Power Ratio	RMC
Frequency Stability	RMC
Spurious Emissions at Antenna Terminals	RMC
Radiates Spurious Emission	RMC

Test modes are chosen to be reported as the worst case configuration below for LTE Band 4/12/13/66/71:

Test items	Modes	Bandwidth (MHz)						Modulation		RB			Test Channel		
		1.4	3	5	10	15	20	QPSK	16QAM	1	50%	100%	L	M	H
RF power output	LTE 4	O	O	O	O	O	O	O	O	O	O	O	O	O	O
	LTE 12	O	O	O	O	-	-	O	O	O	O	O	O	O	O
	LTE 13	-	-	O	O	-	-	O	O	O	O	O	O	O	O
	LTE 66	O	O	O	O	O	O	O	O	O	O	O	O	O	O
	LTE 71	-	-	O	O	O	O	O	O	O	O	O	O	O	O
Effective Isotropic	LTE 4	O	O	O	O	O	O	O	O	O	O	O	O	O	O
	LTE 12	O	O	O	O	-	-	O	O	O	O	O	O	O	O

This report shall not be reproduced except in full, without the written approval of TA Technology (Shanghai) Co., Ltd.

Radiated power	LTE 13	-	-	O	O	-	-	O	O	O	O	O	O	O	O
	LTE 66	O	O	O	O	O	O	O	O	O	O	O	O	O	O
	LTE 71	-	-	O	O	O	O	O	O	O	O	O	O	O	O
Occupied Bandwidth	LTE 4	O	O	O	O	O	O	O	O	-	-	O	O	O	O
	LTE 12	O	O	O	O	-	-	O	O	-	-	O	O	O	O
	LTE 13	-	-	O	O	-	-	O	O			O	O	O	O
	LTE 66	O	O	O	O	O	O	O	O	-	-	O	O	O	O
	LTE 71			O	O	O	O	O	O			O	O	O	O
Band Edge Compliance	LTE 4	O	O	O	O	O	O	O	O	O	-	O	O	-	O
	LTE 12	O	O	O	O	-	-	O	O	O	-	O	O	-	O
	LTE 13	-	-	O	O	-	-	O	O	O	-	O	O	-	O
	LTE 66	O	O	O	O	O	O	O	O	O	-	O	O	-	O
	LTE 71	-	-	O	O	O	O	O	O	O	-	O	O	-	O
Peak-to-Average Power Ratio	LTE 4	O	O	O	O	O	O	O	O	-	-	O	O	O	O
	LTE 12	O	O	O	O	-	-	O	O	-	-	O	O	O	O
	LTE 13	-	-	O	O	-	-	O	O	-	-	O	O	O	O
	LTE 66	O	O	O	O	O	O	O	O	-	-	O	O	O	O
	LTE 71	-	-	O	O	O	O	O	O	-	-	O	O	O	O
Frequency Stability	LTE 4	O	O	O	O	O	O	O	O	-	-	O	O	-	O
	LTE 12	O	O	O	O	-	-	O	O	-	-	O	O	-	O
	LTE 13	-	-	O	O	-	-	O	O	-	-	O	O	-	O
	LTE 66	O	O	O	O	O	O	O	O	-	-	O	O	-	O
	LTE 71	-	-	O	O	O	O	O	O	-	-	O	O	-	O
Spurious Emissions at Antenna Terminals	LTE 4	O	O	O	O	O	O	O	-	O	O	O	O	O	O
	LTE 12	O	O	O	O	-	-	O	-	O	O	O	O	O	O
	LTE 13	-	-	O	O	-	-	O	-	O	O	O	O	O	O
	LTE 66	O	O	O	O	O	O	O	-	O	O	O	O	O	O
	LTE 71	-	-	O	O	O	O	O	-	O	O	O	O	O	O
Radiates Spurious Emission	LTE 4	-	-	O	-	-	-	O	-	O	-	-	O	O	O
	LTE 12	-	-	O	-	-	-	O	-	O	-	-	O	O	O
	LTE 13	-	-	O	-	-	-	O	-	O	-	-	O	O	O
	LTE 66	-	-	O	-	-	-	O	-	O	-	-	O	O	O
	LTE 71	-	-	O	-	-	-	O	-	O	-	-	O	O	O
Note	1. The mark “O” means that this configuration is chosen for testing. 2. The mark “-” means that this configuration is not testing.														

This report shall not be reproduced except in full, without the written approval of TA Technology (Shanghai) Co., Ltd.

5 Test Case Results

5.1 RF Power Output

Ambient condition

Temperature	Relative humidity	Pressure
23°C ~25°C	45%~50%	101.5kPa

Methods of Measurement

During the process of the testing, The EUT is controlled by the Base Station Simulator to ensure max power transmission and proper modulation.

Test Setup

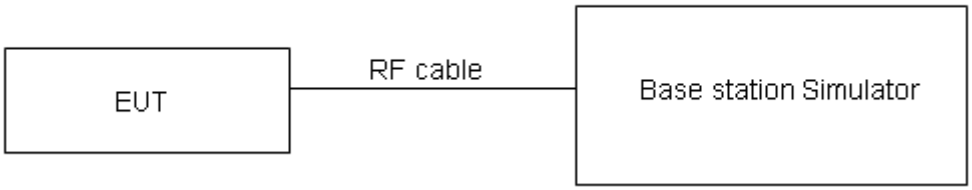

The loss between RF output port of the EUT and the input port of the tester has been taken into consideration.

Limits

No specific RF power output requirements in part 2.1046.

Measurement Uncertainty

The assessed measurement uncertainty to ensure 95% confidence level for the normal distribution is with the coverage factor k = 2, U=0.4 dB.

This report shall not be reproduced except in full, without the written approval of TA Technology (Shanghai) Co., Ltd.

Test Results

WCDMA Band IV		AV Conducted Power(dBm)		
		Channel 1312	Channel 1413	Channel 1513
		1712.4 (MHz)	1732.6 (MHz)	1752.6(MHz)
RMC		23.39	23.34	23.25
HSDPA	Sub - Test 1	22.36	22.16	22.19
	Sub - Test 2	22.44	22.14	22.26
	Sub - Test 3	21.83	21.64	21.78
	Sub - Test 4	21.92	21.69	21.76
HSUPA	Sub - Test 1	22.13	22.15	22.07
	Sub - Test 2	21.80	21.73	21.63
	Sub - Test 3	22.27	22.21	22.12
	Sub - Test 4	22.37	22.13	22.16
	Sub - Test 5	22.44	22.18	22.19
DC-HSDPA	Sub - Test 1	22.73	22.70	22.82
	Sub - Test 2	22.72	22.69	22.58
	Sub - Test 3	22.30	22.18	22.09
	Sub - Test 4	22.29	22.17	22.34

This report shall not be reproduced except in full, without the written approval of TA Technology (Shanghai) Co., Ltd.

LTE Band 4				AV Conducted Power(dBm)		
Bandwidth	Modulation	RB size	RB offset	Channel/Frequency (MHz)		
				19957/1710.7	20175/1732.5	20393/1754.3
1.4MHz	QPSK	1	0	23.55	23.20	23.42
		1	2	23.44	23.53	23.46
		1	5	23.20	23.54	23.68
		3	0	23.32	23.22	23.55
		3	2	23.28	23.33	23.40
		3	3	23.31	23.42	23.39
		6	0	22.30	22.40	22.64
	16QAM	1	0	22.45	22.25	23.27
		1	2	22.52	22.79	23.15
		1	5	22.38	22.98	23.37
		3	0	22.23	22.32	22.43
		3	2	22.32	22.39	22.26
		3	3	22.39	22.47	22.47
		6	0	21.34	21.48	21.68
Bandwidth	Modulation	RB size	RB offset	Channel/Frequency (MHz)		
				19965/1711.5	20175/1732.5	20385/1753.5
3MHz	QPSK	1	0	23.57	23.24	23.45
		1	7	23.47	23.58	23.50
		1	14	23.23	23.59	23.72
		8	0	22.42	22.34	22.68
		8	4	22.40	22.43	22.52
		8	7	22.41	22.53	22.49
		15	0	22.33	22.44	22.67
	16QAM	1	0	22.48	22.27	23.30
		1	7	22.55	22.84	23.19
		1	14	22.40	23.02	23.40
		8	0	21.34	21.45	21.55
		8	4	21.43	21.52	21.38
		8	7	21.49	21.59	21.60
		15	0	21.37	21.52	21.71
Bandwidth	Modulation	RB size	RB offset	Channel/Frequency (MHz)		
				19975/1712.5	20175/1732.5	20375/1752.5
5MHz	QPSK	1	0	23.54	23.22	23.41
		1	13	23.45	23.54	23.47
		1	24	23.20	23.54	23.68
		12	0	22.39	22.29	22.64
		12	6	22.38	22.39	22.47
		12	13	22.39	22.51	22.45
		25	0	22.31	22.43	22.65

This report shall not be reproduced except in full, without the written approval of TA Technology (Shanghai) Co., Ltd.

	16QAM	1	0	22.45	22.23	23.27
		1	13	22.52	22.82	23.16
		1	24	22.37	23.00	23.36
		12	0	21.32	21.41	21.52
		12	6	21.40	21.47	21.34
		12	13	21.46	21.54	21.56
		25	0	21.35	21.48	21.66
Bandwidth	Modulation	RB size	RB offset	Channel/Frequency (MHz)		
				20000/1715	20175/1732.5	20350/1750
10MHz	QPSK	1	0	23.56	23.23	23.44
		1	25	23.48	23.59	23.51
		1	49	23.22	23.58	23.71
		25	0	22.42	22.34	22.68
		25	13	22.41	22.44	22.51
		25	25	22.41	22.55	22.50
		50	0	22.39	22.45	22.69
	16QAM	1	0	22.47	22.26	23.29
		1	25	22.55	22.86	23.19
		1	49	22.40	23.02	23.39
		25	0	21.35	21.46	21.56
		25	13	21.42	21.51	21.37
		25	25	21.49	21.59	21.60
		50	0	21.38	21.53	21.70
Bandwidth	Modulation	RB size	RB offset	Channel/Frequency (MHz)		
				20025/1717.5	20175/1732.5	20325/1747.5
15MHz	QPSK	1	0	23.55	23.19	23.42
		1	38	23.46	23.58	23.48
		1	74	23.19	23.53	23.67
		36	0	22.40	22.30	22.65
		36	18	22.38	22.39	22.47
		36	39	22.38	22.52	22.46
		75	0	22.37	22.41	22.64
	16QAM	1	0	22.42	22.24	23.27
		1	38	22.53	22.83	23.17
		1	74	22.37	22.98	23.36
		36	0	21.32	21.44	21.53
		36	18	21.39	21.46	21.33
		36	39	21.47	21.55	21.57
		75	0	21.35	21.48	21.66
Bandwidth	Modulation	RB size	RB offset	Channel/Frequency (MHz)		
				20050/1720	20175/1732.5	20300/1745
20MHz	QPSK	1	0	23.52	23.15	23.39
		1	50	23.45	23.54	23.46

This report shall not be reproduced except in full, without the written approval of TA Technology (Shanghai) Co., Ltd.

		1	99	23.17	23.52	23.64
		50	0	22.37	22.25	22.61
		50	25	22.36	22.35	22.44
		50	50	22.35	22.47	22.42
		100	0	22.34	22.36	22.60
	16QAM	1	0	22.40	22.20	23.22
		1	50	22.49	22.81	23.13
		1	99	22.35	22.95	23.34
		50	0	21.29	21.40	21.50
		50	25	21.36	21.44	21.30
		50	50	21.44	21.50	21.53
		100	0	21.33	21.44	21.63

LTE Band 12				AV Conducted Power(dBm)		
Bandwidth	Modulation	RB size	RB offset	Channel/Frequency (MHz)		
				23017/699.7	23095/707.5	23173/715.3
1.4MHz	QPSK	1	0	23.63	23.64	23.61
		1	2	23.67	23.57	23.69
		1	5	23.61	23.50	23.70
		3	0	23.50	23.54	23.63
		3	2	23.45	23.50	23.54
		3	3	23.66	23.62	23.63
		6	0	22.61	22.57	22.65
	16QAM	1	0	22.95	22.18	22.96
		1	2	22.94	22.55	23.20
		1	5	22.76	22.36	22.86
		3	0	22.58	22.60	22.74
		3	2	22.52	22.50	22.51
		3	3	22.52	22.58	22.46
		6	0	21.71	21.63	21.84
Bandwidth	Modulation	RB size	RB offset	Channel/Frequency (MHz)		
				23025/700.5	23095/707.5	23165/714.5
3MHz	QPSK	1	0	23.65	23.68	23.64
		1	7	23.70	23.62	23.73
		1	14	23.64	23.55	23.74
		8	0	22.60	22.66	22.76
		8	4	22.57	22.60	22.66
		8	7	22.76	22.73	22.73
		15	0	22.64	22.61	22.68
	16QAM	1	0	22.98	22.20	22.99
		1	7	22.97	22.60	23.24

This report shall not be reproduced except in full, without the written approval of TA Technology (Shanghai) Co., Ltd.

		1	14	22.78	22.40	22.89
		8	0	21.69	21.73	21.86
		8	4	21.63	21.63	21.63
		8	7	21.62	21.70	21.59
		15	0	21.74	21.67	21.87
Bandwidth	Modulation	RB size	RB offset	Channel/Frequency (MHz)		
				23035/701.5	23095/707.5	23155/713.5
5MHz	QPSK	1	0	23.63	23.63	23.61
		1	13	23.69	23.62	23.71
		1	24	23.60	23.49	23.69
		12	0	22.58	22.62	22.73
		12	6	22.55	22.56	22.61
		12	13	22.73	22.72	22.70
		25	0	22.68	22.58	22.65
	16QAM	1	0	22.92	22.17	22.96
		1	13	22.95	22.59	23.22
		1	24	22.75	22.36	22.85
		12	0	21.67	21.72	21.84
		12	6	21.59	21.57	21.58
		12	13	21.60	21.66	21.56
		25	0	21.72	21.63	21.82
Bandwidth	Modulation	RB size	RB offset	Channel/Frequency (MHz)		
				23060/704	23095/707.5	23130/711
10MHz	QPSK	1	0	23.60	23.59	23.58
		1	25	23.68	23.58	23.69
		1	49	23.58	23.48	23.66
		25	0	22.55	22.57	22.69
		25	13	22.53	22.52	22.58
		25	25	22.70	22.67	22.66
		50	0	22.65	22.53	22.61
	16QAM	1	0	22.90	22.13	22.91
		1	25	22.91	22.57	23.18
		1	49	22.73	22.33	22.83
		25	0	21.64	21.68	21.81
		25	13	21.56	21.55	21.55
		25	25	21.57	21.61	21.52
		50	0	21.70	21.59	21.79

This report shall not be reproduced except in full, without the written approval of TA Technology (Shanghai) Co., Ltd.

LTE Band 13				Conducted Power(dBm)		
Bandwidth	Modulation	RB size	RB offset	Channel/Frequency (MHz)		
				23205/779.5	23230/782	23255/784.5
5MHz	QPSK	1	0	23.72	23.63	23.78
		1	13	23.79	23.68	23.77
		1	24	23.58	23.69	23.65
		12	0	22.87	22.77	22.82
		12	6	22.85	22.80	22.86
		12	13	22.75	22.82	22.83
		25	0	22.81	22.74	22.80
	16QAM	1	0	23.06	22.41	22.60
		1	13	23.14	22.45	22.35
		1	24	23.03	22.16	22.43
		12	0	21.50	21.52	21.68
		12	6	21.63	21.75	21.65
		12	13	21.76	21.60	21.57
		25	0	21.74	21.96	21.62
Bandwidth	Modulation	RB size	RB offset	Channel/Frequency (MHz)		
				/	23230/782	/
10MHz	QPSK	1	0	/	23.76	/
		1	25	/	23.85	/
		1	49	/	23.71	/
		25	0	/	22.87	/
		25	13	/	22.79	/
		25	25	/	22.88	/
		50	0	/	22.74	/
	16QAM	1	0	/	23.11	/
		1	25	/	23.41	/
		1	49	/	22.94	/
		25	0	/	21.78	/
		25	13	/	21.83	/
		25	25	/	21.88	/
		50	0	/	21.82	/

LTE Band 66				Conducted Power(dBm)		
Bandwidth	Modulation	RB size	RB offset	Channel/Frequency (MHz)		
				131979/1710.7	132322/1745	132665/1779.3
1.4MHz	QPSK	1	0	23.42	23.57	23.56
		1	2	23.30	23.76	23.57
		1	5	23.37	23.64	23.45
		3	0	23.47	23.58	23.26

This report shall not be reproduced except in full, without the written approval of TA Technology (Shanghai) Co., Ltd.

		3	2	23.35	23.75	23.33
		3	3	23.59	23.55	23.36
		6	0	22.51	22.73	22.34
	16QAM	1	0	22.84	22.38	22.20
		1	2	22.43	22.76	22.57
		1	5	22.57	22.42	22.22
		3	0	22.53	22.57	22.27
		3	2	22.32	22.76	22.43
		3	3	22.69	22.62	22.45
		6	0	21.65	21.84	21.45
Bandwidth	Modulation	RB size	RB offset	Channel/Frequency (MHz)		
				131987/1711.5	132322/1745	132657/1778.5
3MHz	QPSK	1	0	23.44	23.61	23.59
		1	7	23.33	23.81	23.61
		1	14	23.40	23.69	23.49
		8	0	22.57	22.70	22.39
		8	4	22.47	22.85	22.45
		8	7	22.69	22.66	22.46
		15	0	22.54	22.77	22.37
	16QAM	1	0	22.87	22.40	22.23
		1	7	22.46	22.81	22.61
		1	14	22.59	22.46	22.25
		8	0	21.64	21.70	21.39
		8	4	21.43	21.89	21.55
		8	7	21.79	21.74	21.58
		15	0	21.68	21.88	21.48
Bandwidth	Modulation	RB size	RB offset	Channel/Frequency (MHz)		
				131997/1712.5	132322/1745	132647/1777.5
5MHz	QPSK	1	0	23.41	23.59	23.55
		1	13	23.31	23.77	23.58
		1	24	23.37	23.64	23.45
		12	0	22.54	22.65	22.35
		12	6	22.45	22.81	22.40
		12	13	22.67	22.64	22.42
		25	0	22.52	22.76	22.35
	16QAM	1	0	22.84	22.36	22.20
		1	13	22.43	22.79	22.58
		1	24	22.56	22.44	22.21
		12	0	21.62	21.66	21.36
		12	6	21.40	21.84	21.51
		12	13	21.76	21.69	21.54
		25	0	21.66	21.84	21.43
Bandwidth	Modulation	RB size	RB offset	Channel/Frequency (MHz)		

This report shall not be reproduced except in full, without the written approval of TA Technology (Shanghai) Co., Ltd.

				132022/1715	132322/1745	132622/1775
10MHz	QPSK	1	0	23.43	23.60	23.58
		1	25	23.34	23.82	23.62
		1	49	23.39	23.68	23.48
		25	0	22.57	22.70	22.39
		25	13	22.48	22.86	22.44
		25	25	22.69	22.68	22.47
		50	0	22.60	22.78	22.39
	16QAM	1	0	22.86	22.39	22.22
		1	25	22.46	22.83	22.61
		1	49	22.59	22.46	22.24
		25	0	21.65	21.71	21.40
		25	13	21.42	21.88	21.54
		25	25	21.79	21.74	21.58
		50	0	21.69	21.89	21.47
Bandwidth	Modulation	RB size	RB offset	Channel	Channel	Channel
				132047/1717.5	132322/1745	132597/1772.5
15MHz	QPSK	1	0	23.42	23.56	23.56
		1	38	23.32	23.81	23.59
		1	74	23.36	23.63	23.44
		36	0	22.55	22.66	22.36
		36	18	22.45	22.81	22.40
		36	39	22.66	22.65	22.43
		75	0	22.58	22.74	22.34
	16QAM	1	0	22.81	22.37	22.20
		1	38	22.44	22.80	22.59
		1	74	22.56	22.42	22.21
		36	0	21.62	21.69	21.37
		36	18	21.39	21.83	21.50
		36	39	21.77	21.70	21.55
		75	0	21.66	21.84	21.43
Bandwidth	Modulation	RB size	RB offset	Channel/Frequency (MHz)		
				132072/1720	132322/1745	132572/1770
20MHz	QPSK	1	0	23.39	23.52	23.53
		1	50	23.31	23.77	23.57
		1	99	23.34	23.62	23.41
		50	0	22.52	22.61	22.32
		50	25	22.43	22.77	22.37
		50	50	22.63	22.60	22.39
		100	0	22.55	22.69	22.30
	16QAM	1	0	22.79	22.33	22.15
		1	50	22.40	22.78	22.55
		1	99	22.54	22.39	22.19

This report shall not be reproduced except in full, without the written approval of TA Technology (Shanghai) Co., Ltd.

		50	0	21.59	21.65	21.34
		50	25	21.36	21.81	21.47
		50	50	21.74	21.65	21.51
		100	0	21.64	21.80	21.40

LTE Band 71				Conducted Power(dBm)		
Bandwidth	Modulation	RB size	RB offset	Channel/Frequency (MHz)		
				133147/665.5	133297/680.5	133447/695.5
5MHz	QPSK	1	0	23.15	23.23	22.96
		1	13	23.44	23.23	23.08
		1	24	23.25	23.06	23.07
		12	0	22.15	22.33	22.29
		12	6	22.20	22.19	22.21
		12	13	22.38	22.36	22.33
		25	0	22.17	22.40	22.20
	16QAM	1	0	22.08	22.64	22.90
		1	13	22.20	22.85	22.91
		1	24	22.22	22.43	22.78
		12	0	21.29	21.23	21.07
		12	6	21.25	21.28	21.26
		12	13	21.38	21.23	21.13
		25	0	21.32	21.50	21.31
Bandwidth	Modulation	RB size	RB offset	Channel/Frequency (MHz)		
				133172/668	133297/680.5	133422/693
10MHz	QPSK	1	0	23.17	23.24	22.99
		1	25	23.47	23.28	23.12
		1	49	23.27	23.10	23.10
		25	0	22.18	22.38	22.33
		25	13	22.23	22.24	22.25
		25	25	22.40	22.40	22.38
		50	0	22.25	22.42	22.24
	16QAM	1	0	22.10	22.67	22.92
		1	25	22.23	22.89	22.94
		1	49	22.25	22.45	22.81
		25	0	21.32	21.28	21.11
		25	13	21.27	21.32	21.29
		25	25	21.41	21.28	21.17
		50	0	21.35	21.55	21.35
Bandwidth	Modulation	RB size	RB offset	Channel/Frequency (MHz)		
				133197/670.5	133297/680.5	133397/690.5
15MHz	QPSK	1	0	23.16	23.01	22.97

This report shall not be reproduced except in full, without the written approval of TA Technology (Shanghai) Co., Ltd.

		1	38	23.45	23.11	23.09
		1	74	23.24	23.09	23.06
		36	0	22.16	22.25	22.30
		36	18	22.20	22.21	22.21
		36	39	22.37	22.13	22.34
		75	0	22.23	22.11	22.19
	16QAM	1	0	22.05	22.07	22.90
		1	38	22.21	22.09	22.92
		1	74	22.22	22.22	22.78
		36	0	21.29	21.25	21.08
		36	18	21.24	21.20	21.25
		36	39	21.39	21.12	21.14
		75	0	21.32	21.11	21.31
Bandwidth	Modulation	RB size	RB offset	Channel/Frequency (MHz)		
				133222/673	133322/683	133372/688
20MHz	QPSK	1	0	23.13	23.16	22.94
		1	50	23.44	23.23	23.07
		1	99	23.22	23.04	23.03
		50	0	22.13	22.29	22.26
		50	25	22.18	22.15	22.18
		50	50	22.34	22.32	22.30
		100	0	22.20	22.33	22.15
	16QAM	1	0	22.03	22.61	22.85
		1	50	22.17	22.84	22.88
		1	99	22.20	22.38	22.76
		50	0	21.26	21.22	21.05
		50	25	21.21	21.25	21.22
		50	50	21.36	21.19	21.10
		100	0	21.30	21.46	21.28

This report shall not be reproduced except in full, without the written approval of TA Technology (Shanghai) Co., Ltd.

5.2 Effective Isotropic Radiated Power

Ambient condition

Temperature	Relative humidity	Pressure
23°C ~25°C	45%~50%	101.5kPa

Methods of Measurement

1. The testing follows FCC KDB 971168 D01 v03r01 Section 5.8 and ANSI/TIA-603-E (2016).

a) Connect the equipment as illustrated. Mount the equipment with the manufacturer specified antenna in a vertical orientation on a manufacturer specified mounting surface located on a non-conducting rotating platform of a RF anechoic chamber (preferred) or a standard radiation site.

b) Key the transmitter, then rotate the EUT 360° azimuthally and record spectrum analyzer power level (LVL) measurements at angular increments that are sufficiently small to permit resolution of all peaks. If a standard radiation test site is used, raise and lower the test antenna to obtain a maximum reading at each angular increment. (Note: several batteries may be needed to offset the effect of battery voltage droop, which should not exceed 5% of the manufactured specified battery voltage during transmission).

c) Replace the transmitter under test with a vertically polarized half-wave dipole (or an antenna whose gain is known relative to an ideal half-wave dipole). The center of the antenna should be at the same location as the center of the antenna under test.

d) Connect the antenna to a signal generator with a known output power and record the path loss (in dB) as LOSS. If a standard radiation test site is used, raise and lower the test antenna to obtain a maximum reading.LOSS = Generator Output Power (dBm) – Analyzer reading (dBm)

e) Determine the effective radiated output power at each angular position from the readings in steps b) and d) using the following equation:ERP (dBm) = LVL (dBm) + LOSS (dB)

f) The maximum ERP is the maximum value determined in the preceding step.

g) When calculating ERP, in addition to knowing the antenna radiation and matching characteristics, it is necessary to know the loss values of all elements (e.g.transmission line attenuation, mismatches, filters, combiners) interposed between the point where transmitter output power is measured, and the point where power is applied to the antenna. ERP can then be calculated as follows:

EIRP (dBm) = Output Power (dBm) - Losses (dB) + Antenna Gain (dBi)

where:dBd refers to gain relative to an ideal dipole.

EIRP (dBm) = ERP (dBm) + 2.15 (dB.)

The RB allocation refers to section 5.1, using the maximum output power configuration.

This report shall not be reproduced except in full, without the written approval of TA Technology (Shanghai) Co., Ltd.

Test setup

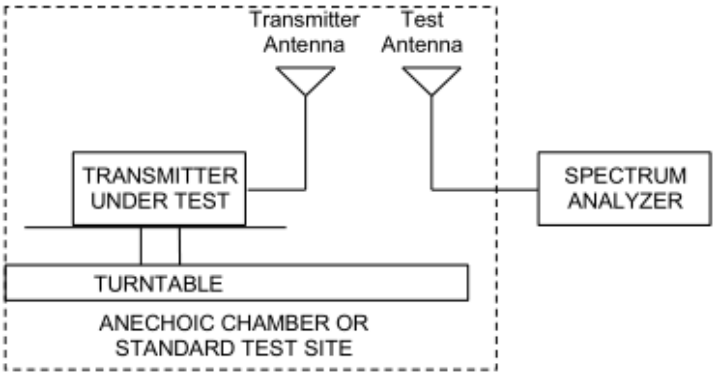

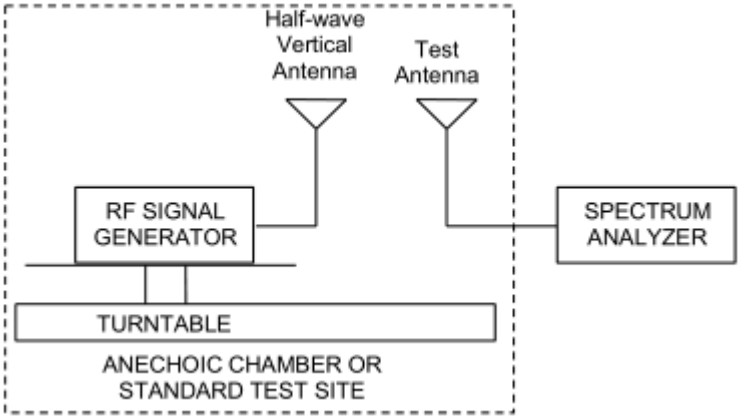

Note: Area side:2.4mX3.6m

The radiated emission was measured in the following position: EUT stand-up position (Z axis), lie-down position (X, Y axis). The worst emission was found in stand-up position (Z axis) and the worst case was recorded.

This report shall not be reproduced except in full, without the written approval of TA Technology (Shanghai) Co., Ltd.

Limits

Rule Part 27.50(b) (10) specifies that “Portable stations (hand-held devices) transmitting in the 746-757 MHz, 776-788 MHz, and 805-806 MHz bands are limited to 3 watts ERP”

Rule Part 27.50(c) (10) specifies that “Portable stations (hand-held devices) in the 600 MHz uplink band and the 698-746 MHz band, and fixed and mobile stations in the 600 MHz uplink band are limited to 3 watts ERP”

Rule Part 27.50(d) (4) specifies that “Fixed, mobile, and portable (hand-held) stations operating in the 1710-1755 MHz band and mobile and portable stations operating in the 1695-1710 MHz and 1755-1780 MHz bands are limited to 1 watt EIRP.”

Part 27.50(b)(10)Limit	⩽ 3 W (34.77 dBm)
Part 27.50(c)(10)Limit	⩽ 3 W (34.77 dBm)
Part 27.50(d)(4)Limit	⩽ 1 W (30 dBm)

Measurement Uncertainty

The assessed measurement uncertainty to ensure 95% confidence level for the normal distribution is with the coverage factor k = 2, U= 1.19 dB

This report shall not be reproduced except in full, without the written approval of TA Technology (Shanghai) Co., Ltd.

Test Results

The measurement is performed for both of horizontal and vertical antenna Polarization, and only the data of worst mode is recorded in this report.

Mode	Channel	Frequency (MHz)	Polarization	EIRP (dBm)	Limit (dBm)	Conclusion
WCDMA Band IV	Low	1712.4	Horizontal	25.59	30	Pass
	Mid	1732.6	Horizontal	25.62	30	Pass
	High	1752.6	Horizontal	25.26	30	Pass

LTE Band 4						
Bandwidth	Channel	Frequency (MHz)	Polarization	EIRP (dBm)	Limit (dBm)	Conclusion
1.4 MHz (QPSK)	Low	1710.7	Horizontal	26.08	30	Pass
	Mid	1732.5	Horizontal	25.73	30	Pass
	High	1754.3	Horizontal	25.24	30	Pass
3 MHz (QPSK)	Low	1711.5	Horizontal	25.83	30	Pass
	Mid	1732.5	Horizontal	25.57	30	Pass
	High	1753.5	Horizontal	25.23	30	Pass
5 MHz (QPSK)	Low	1712.5	Horizontal	25.90	30	Pass
	Mid	1732.5	Horizontal	25.71	30	Pass
	High	1752.5	Horizontal	24.99	30	Pass
10 MHz (QPSK)	Low	1715	Horizontal	25.56	30	Pass
	Mid	1732.5	Horizontal	25.55	30	Pass
	High	1750	Horizontal	25.69	30	Pass
15 MHz (QPSK)	Low	1717.5	Horizontal	25.87	30	Pass
	Mid	1732.5	Horizontal	25.66	30	Pass
	High	1747.5	Horizontal	25.53	30	Pass
20 MHz (QPSK)	Low	1720	Horizontal	25.51	30	Pass
	Mid	1732.5	Horizontal	25.40	30	Pass
	High	1745	Horizontal	25.79	30	Pass
1.4 MHz (16QAM)	Low	1710.7	Horizontal	25.45	30	Pass
	Mid	1732.5	Horizontal	24.90	30	Pass
	High	1754.3	Horizontal	24.69	30	Pass
3 MHz (16QAM)	Low	1711.5	Horizontal	25.19	30	Pass
	Mid	1732.5	Horizontal	24.76	30	Pass
	High	1753.5	Horizontal	24.67	30	Pass
5 MHz (16QAM)	Low	1712.5	Horizontal	25.52	30	Pass
	Mid	1732.5	Horizontal	25.54	30	Pass
	High	1752.5	Horizontal	24.78	30	Pass
10 MHz (16QAM)	Low	1715	Horizontal	25.22	30	Pass
	Mid	1732.5	Horizontal	25.03	30	Pass
	High	1750	Horizontal	25.36	30	Pass

This report shall not be reproduced except in full, without the written approval of TA Technology (Shanghai) Co., Ltd.

15 MHz (16QAM)	Low	1717.5	Horizontal	25.19	30	Pass
	Mid	1732.5	Horizontal	25.22	30	Pass
	High	1747.5	Horizontal	24.99	30	Pass
20 MHz (16QAM)	Low	1720	Horizontal	25.22	30	Pass
	Mid	1732.5	Horizontal	24.88	30	Pass
	High	1745	Horizontal	25.35	30	Pass

LTE Band 12						
Bandwidth	**Channel**	**Frequency (MHz)**	**Polarization**	**ERP (dBm)**	**Limit (dBm)**	**Conclusion**
1.4 MHz (QPSK)	Low	699.7	Horizontal	18.96	34.77	Pass
	Mid	707.5	Horizontal	20.31	34.77	Pass
	High	715.3	Horizontal	20.26	34.77	Pass
3 MHz (QPSK)	Low	700.5	Horizontal	19.55	34.77	Pass
	Mid	707.5	Horizontal	19.90	34.77	Pass
	High	714.5	Horizontal	20.16	34.77	Pass
5 MHz (QPSK)	Low	701.5	Horizontal	19.11	34.77	Pass
	Mid	707.5	Horizontal	20.04	34.77	Pass
	High	713.5	Horizontal	20.48	34.77	Pass
10 MHz (QPSK)	Low	704	Horizontal	19.21	34.77	Pass
	Mid	707.5	Horizontal	19.33	34.77	Pass
	High	711	Horizontal	19.83	34.77	Pass
1.4 MHz (16QAM)	Low	699.7	Horizontal	18.66	34.77	Pass
	Mid	707.5	Horizontal	19.77	34.77	Pass
	High	715.3	Horizontal	19.97	34.77	Pass
3 MHz (16QAM)	Low	700.5	Horizontal	19.19	34.77	Pass
	Mid	707.5	Horizontal	19.56	34.77	Pass
	High	714.5	Horizontal	19.92	34.77	Pass
5 MHz (16QAM)	Low	701.5	Horizontal	18.89	34.77	Pass
	Mid	707.5	Horizontal	19.93	34.77	Pass
	High	713.5	Horizontal	20.38	34.77	Pass
10 MHz (16QAM)	Low	704	Horizontal	18.55	34.77	Pass
	Mid	707.5	Horizontal	18.57	34.77	Pass
	High	711	Horizontal	19.30	34.77	Pass

This report shall not be reproduced except in full, without the written approval of TA Technology (Shanghai) Co., Ltd.

LTE Band 13						
Bandwidth	Channel	Frequency (MHz)	Polarization	ERP (dBm)	Limit (dBm)	Conclusion
5MHz (QPSK)	Low	779.5	Horizontal	23.26	34.77	Pass
	Mid	782	Horizontal	23.25	34.77	Pass
	High	784.5	Horizontal	23.36	34.77	Pass
10MHz (QPSK)	Mid	782	Horizontal	23.63	34.77	Pass
5MHz (16QAM)	Low	779.5	Horizontal	22.65	34.77	Pass
	Mid	782	Horizontal	22.89	34.77	Pass
	High	784.5	Horizontal	22.78	34.77	Pass
10MHz (16QAM)	Mid	782	Horizontal	23.26	34.77	Pass

LTE Band 66						
Band width	Channel	Frequency (MHz)	Polarization	EIRP (dBm)	Limit (dBm)	Conclusion
1.4 MHz (QPSK)	Low	1710.70	Horizontal	27.17	30	Pass
	Mid	1745.00	Horizontal	27.10	30	Pass
	High	1779.30	Horizontal	26.05	30	Pass
3 MHz (QPSK)	Low	1711.50	Horizontal	27.51	30	Pass
	Mid	1745.00	Horizontal	27.06	30	Pass
	High	1778.50	Horizontal	26.01	30	Pass
5 MHz (QPSK)	Low	1712.50	Horizontal	26.92	30	Pass
	Mid	1745.00	Horizontal	26.78	30	Pass
	High	1777.50	Horizontal	25.98	30	Pass
10 MHz (QPSK)	Low	1715.00	Horizontal	27.25	30	Pass
	Mid	1745.00	Horizontal	27.30	30	Pass
	High	1775.00	Horizontal	26.13	30	Pass
15 MHz (QPSK)	Low	1717.50	Horizontal	27.01	30	Pass
	Mid	1745.00	Horizontal	27.12	30	Pass
	High	1772.50	Horizontal	26.43	30	Pass
20 MHz (QPSK)	Low	1720.00	Horizontal	26.98	30	Pass
	Mid	1745.00	Horizontal	27.02	30	Pass
	High	1770.00	Horizontal	26.31	30	Pass
1.4 MHz (16QAM)	Low	1710.70	Horizontal	26.54	30	Pass
	Mid	1745.00	Horizontal	26.27	30	Pass
	High	1779.30	Horizontal	25.50	30	Pass
3 MHz (16QAM)	Low	1711.50	Horizontal	26.87	30	Pass
	Mid	1745.00	Horizontal	26.25	30	Pass
	High	1778.50	Horizontal	25.45	30	Pass

This report shall not be reproduced except in full, without the written approval of TA Technology (Shanghai) Co., Ltd.

5 MHz (16QAM)	Low	1712.50	Horizontal	26.14	30	Pass
	Mid	1745.00	Horizontal	26.21	30	Pass
	High	1777.50	Horizontal	25.37	30	Pass
10 MHz (16QAM)	Low	1715.00	Horizontal	26.61	30	Pass
	Mid	1745.00	Horizontal	26.48	30	Pass
	High	1775.00	Horizontal	25.50	30	Pass
15 MHz (16QAM)	Low	1717.50	Horizontal	26.63	30	Pass
	Mid	1745.00	Horizontal	26.98	30	Pass
	High	1772.50	Horizontal	26.19	30	Pass
20 MHz (16QAM)	Low	1720.00	Horizontal	26.79	30	Pass
	Mid	1745.00	Horizontal	26.60	30	Pass
	High	1770.00	Horizontal	25.97	30	Pass

LTE Band 71						
Bandwidth	Channel	Frequency (MHz)	Polarization	ERP (dBm)	Limit (dBm)	Conclusion
5 MHz (QPSK)	Low	665.5	Horizontal	21.30	34.77	Pass
	Mid	680.5	Horizontal	22.72	34.77	Pass
	High	695.5	Horizontal	22.54	34.77	Pass
10 MHz (QPSK)	Low	668	Horizontal	21.15	34.77	Pass
	Mid	680.5	Horizontal	22.42	34.77	Pass
	High	693	Horizontal	22.17	34.77	Pass
15 MHz (QPSK)	Low	670.5	Horizontal	21.32	34.77	Pass
	Mid	680.5	Horizontal	21.74	34.77	Pass
	High	690.5	Horizontal	22.44	34.77	Pass
20 MHz (QPSK)	Low	673	Horizontal	21.41	34.77	Pass
	Mid	683	Horizontal	22.66	34.77	Pass
	High	688	Horizontal	22.52	34.77	Pass
5 MHz (16QAM)	Low	665.5	Horizontal	20.62	34.77	Pass
	Mid	680.5	Horizontal	22.25	34.77	Pass
	High	695.5	Horizontal	22.03	34.77	Pass
10 MHz (16QAM)	Low	668	Horizontal	20.61	34.77	Pass
	Mid	680.5	Horizontal	21.70	34.77	Pass
	High	693	Horizontal	21.64	34.77	Pass
15 MHz (16QAM)	Low	670.5	Horizontal	20.64	34.77	Pass
	Mid	680.5	Horizontal	21.30	34.77	Pass
	High	690.5	Horizontal	21.90	34.77	Pass
20 MHz (16QAM)	Low	673	Horizontal	20.92	34.77	Pass
	Mid	683	Horizontal	21.94	34.77	Pass
	High	688	Horizontal	21.88	34.77	Pass

Note: 1. EIRP= E.R.P+2.15

This report shall not be reproduced except in full, without the written approval of TA Technology (Shanghai) Co., Ltd.

5.3 Occupied Bandwidth

Ambient condition

Temperature	Relative humidity	Pressure
23°C ~25°C	45%~50%	101.5kPa

Method of Measurement

The EUT was connected to Spectrum Analyzer and Base Station Simulator via power Splitter. The occupied bandwidth is measured using spectrum analyzer.
RBW is set to 51 kHz, VBW is set to 160 kHz for WCDMA Band IV.
RBW is set to 51 kHz, VBW is set to 160 kHz for LTE Band 4/12/66 (1.4MHz).
RBW is set to 100 kHz, VBW is set to 300 kHz for LTE Band 4/12/66 (3MHz).
RBW is set to 100 kHz, VBW is set to 300 kHz for LTE Band 4/12/13/66/71 (5MHz).
RBW is set to 300 kHz, VBW is set to 1MHz for LTE Band 4/12/13/66/71 (10MHz).
RBW is set to 300 kHz, VBW is set to 1MHz for LTE Band 4/66/71 (15MHz/20MHz).
99% power and -26dBc occupied bandwidths are recorded. Spectrum analyzer plots are included on the following pages.

Test Setup

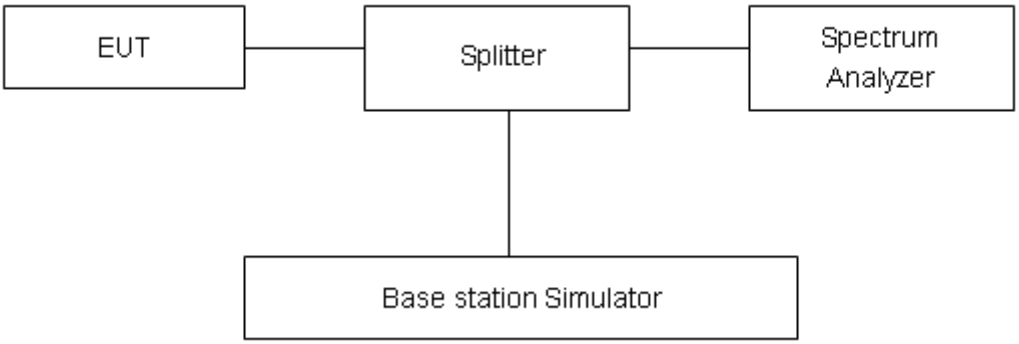

Limits

No specific occupied bandwidth requirements in part 2.1049.

Measurement Uncertainty

The assessed measurement uncertainty to ensure 95% confidence level for the normal distribution is with the coverage factor k = 2, U=624Hz.

This report shall not be reproduced except in full, without the written approval of TA Technology (Shanghai) Co., Ltd.

Test Result

EC25-AFX

Mode	Channel	Frequency (MHz)	99% Power Bandwidth(MHz)	-26dBc Bandwidth(MHz)
WCDMA Band IV (RMC)	1312	1712.4	4.1288	4.696
	1413	1732.6	4.1217	4.714
	1513	1752.6	4.1281	4.715

LTE Band 4						
RB	Modulation	Bandwidth (MHz)	Channel	Frequency (MHz)	99% Power Bandwidth(MHz)	-26dBc Bandwidth(MHz)
100%	QPSK	1.4	19957	1710.7	1.1282	1.366
			20175	1732.5	1.1272	1.362
			20393	1754.3	1.1412	1.369
		3	19965	1711.5	2.7521	3.075
			20175	1732.5	2.7431	3.075
			20385	1753.5	2.7428	3.085
		5	19975	1712.5	4.5161	5.049
			20175	1732.5	4.5341	5.033
			20375	1752.5	4.5121	5.057
		10	20000	1715	9.0083	10.070
			20175	1732.5	9.0383	10.210
			20350	1750	9.0426	10.080
		15	20025	1717.5	13.4140	14.650
			20175	1732.5	13.4770	14.810
			20325	1747.5	13.4540	14.740
		20	20050	1720	17.8660	19.240
			20175	1732.5	17.8520	19.150
			20300	1745	17.8910	19.490
	16QAM	1.4	19957	1710.7	1.1249	1.334
			20175	1732.5	1.1305	1.353
			20393	1754.3	1.1225	1.377
		3	19965	1711.5	2.7348	3.064
			20175	1732.5	2.7630	3.089
			20385	1753.5	2.7407	3.079
		5	19975	1712.5	4.5356	5.040
			20175	1732.5	4.5138	5.037
			20375	1752.5	4.5368	5.045
		10	20000	1715	9.0158	10.050

This report shall not be reproduced except in full, without the written approval of TA Technology (Shanghai) Co., Ltd.